Form No. 3419-642 Rev B

TORO®

Count on it.

Parts Catalog

Workman® MDX-D

Utility Vehicle

Model No. 07236—Serial No. 401380001 and Up

Register at www.Toro.com.
Original Instructions (EN)

3419-642 B

Ordering Replacement Parts

To order replacement parts, please supply the part number, the quantity, and the description of each part desired.

Understanding Reference Numbers

Each identified part in an illustration has a reference number. The reference number for a part also appears in the parts list, along with other information about the part.

This catalog uses two special reference number formats, one to indicate parts in a service assembly and another to indicate the quantity of a given part in an illustration.

Service Assembly Reference Numbers

Parts in service assemblies have reference numbers in the form a:b. The a represents the reference number of the entire service assembly and the b represents a sequential number unique to each part within the service assembly.

For example, a wheel assembly might be identified by reference number 6, the tire by 6:1, the valve by 6:2, and the wheel by 6:3. When you order the assembly identified by reference number 6, you receive all parts identified by reference numbers 6:1,6:2, and 6:3. However, you may also order any part individually. Reference numbers of this type appear in illustration and in parts lists.

Reference Numbers Indicating Quantity

In an illustration, if a reference number indicates more than one part, the reference number has the form nX y. The n represents the quantity of the part, the X is the multiplication symbol, and the y represents the reference number.

For example, in an illustration, the reference number 2X 37 means that two of the parts identified by reference number 37 are indicated.

Contents

Front Frame and Suspension Assembly . . . 4
Rear Frame and Suspension Assembly . . . 5
Diesel Engine Mount Assembly . . . 6
Front Brake Assembly . . . 7
Master Cylinder Assembly No. 104-6782 . . . 8
Brake Caliper Assembly No. 127-7424 . . . 9
Rear Brake Assembly . . . 10
RH Rear Brake Assembly No. 114-8331 . . . 11
LH Rear Brake Assembly No. 114-8332 . . . 12
Steering Assembly . . . 13
Pedal Assembly . . . 14
Shifter Assembly . . . 15
Hood and Fender Assembly . . . 16
Dash Assembly . . . 17
Control Panel Assembly . . . 18
Seatbase Assembly . . . 19
Cargo Bed Assembly . . . 20
Cargo Bed and Tailgate Service Assembly No. 133-0560 . . . 21
Engine, Primary Clutch and Exhaust Assembly . . . 22
Primary Clutch Assembly No. 119-9610 . . . 23
Air Cleaner and Throttle Cable Assembly . . . 24
Air Cleaner Assembly No. 119-9714 . . . 25
Radiator Assembly . . . 26
Rear Axle Drive System Assembly . . . 27
Transaxle Assembly No. 119-0760 . . . 28
Secondary Clutch Assembly No. 119-6011 . . . 30
Battery Assembly . . . 31
Electrical Assembly . . . 32
Fuel Tank Assembly . . . 33
Crankcase Assembly . . . 34
Oil Pan, Oil Pump and Dipstick Assembly . . . 35
Cylinder Head Assembly . . . 36
Gear Case and Oil Filter Cartridge Assembly . . . 37
Cylinder Head Cover Assembly . . . 38
Main Bearing Case Assembly . . . 39
Camshaft and Idle Gear Shaft Assembly . . . 40
Piston and Crankshaft Assembly . . . 41
Fuel Camshaft Assembly . . . 42
Idle Apparatus and Fuel Pump Cover Assembly . . . 43
Injection Pump Assembly . . . 44
Governor Assembly . . . 45
Stop Solenoid and Speed Control Plate Assembly . . . 46
Nozzle Holder and Glow Plug Assembly . . . 47
Nozzle Holder Assembly . . . 48
Alternator, Pulley and Fan Assembly . . . 50
Alternator Components Assembly . . . 51
Starter and Flywheel Assembly . . . 52
Starter Component Assembly . . . 53
Water Flange and Thermostat Assembly . . . 54
Water Pump and Water Pipe Assembly . . . 55
Valve and Rocker Arm Assembly . . . 56
Inlet and Exhaust Manifold Assembly . . . 57
Miscellaneous Engine Parts . . . 58
Attachments and Accessories . . . 59

© 2018—The Toro® Company

8111 Lyndale Avenue South
Bloomington, MN 55420

Contact us at www.Toro.com.
Printed in the USA.

All Rights Reserved

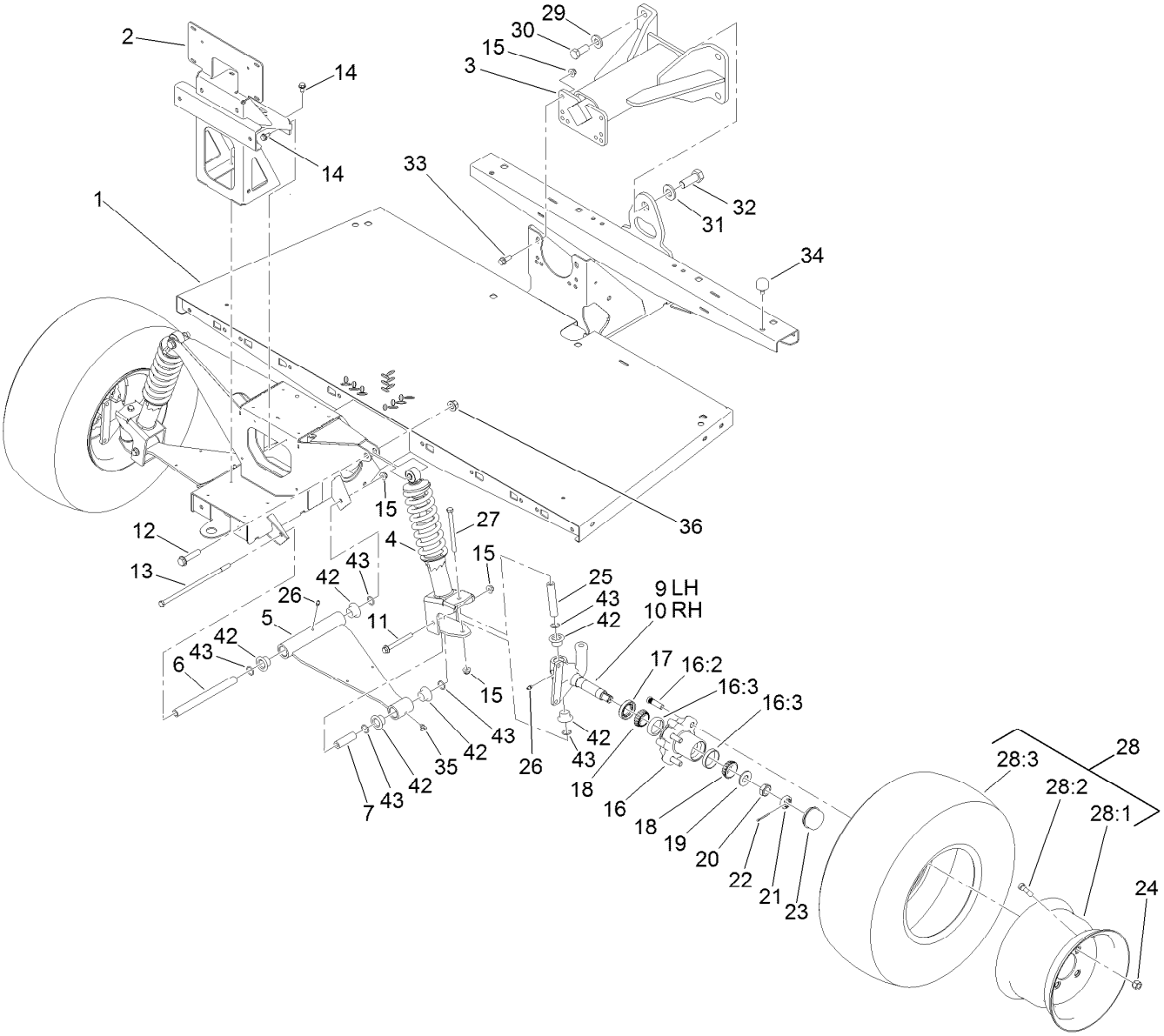

Front Frame and Suspension Assembly

Ref.	Part Number	Qty.	Description
1	132-6735-03	1	Frame-Front
2	132-6736-03	1	Support-Bumper
3	99-7700	1	Yoke-Pivot
4	132-6791	2	Strut ASM
5	132-6747-03	2	Arm-Control
6	133-0595	2	Sleeve-Control Arm, Inner
7	131-8583	2	Sleeve-Control Arm, Outer
9	127-8825-03	1	Spindle-LH
10	127-8826-03	1	Spindle-RH
11	116-4701	2	Screw-HHF
12	3234-46	2	Screw-HHF
13	325-39	2	Screw-HH
14	32144-70	6	Screw-HWHTF
15	104-8301	8	Nut-HF, NI
16	127-8851	2	Front Hub ASM
16:2	10-6830	4	Stud-Type, Drive
16:3	254-72	2	Bearing-Cup, Tapered
17	112-1690	2	Seal-Oil
18	254-94	4	Bearing-Cone, Tapered
19	93-0309	2	Washer-Tab
20	3220-7	2	Nut-Jam

Ref.	Part Number	Qty.	Description
21	93-0307	2	Nut-Lock, Retainer
22	3272-12	2	Pin-Cotter
23	241-119	2	Cap-Dust
24	242-50	8	Nut-Lug
25	131-8582	2	Sleeve-Kingpin
26	302-5	4	Fitting-Grease
27	323-38	2	Screw-HH
28	133-0579	2	Wheel And Tire ASM
28:1	133-0590	1	Wheel
28:2	127-7435	1	Tire
28:3	232-27	1	Stem-Valve
29	99-7667	4	Washer-Flat
30	327-4	4	Screw-HH
31	87-3060	1	Washer-Hardened
32	328-24	1	Screw-HH
33	3234-11	4	Screw-HHF
34	87-2440	1	Bumper-Rubber
35	302-60	2	Fitting-Grease
36	99-5107	4	Nut-Lock
42	133-0643	12	Bushing-Flange, O-Ring
43	237-54	12	O-Ring

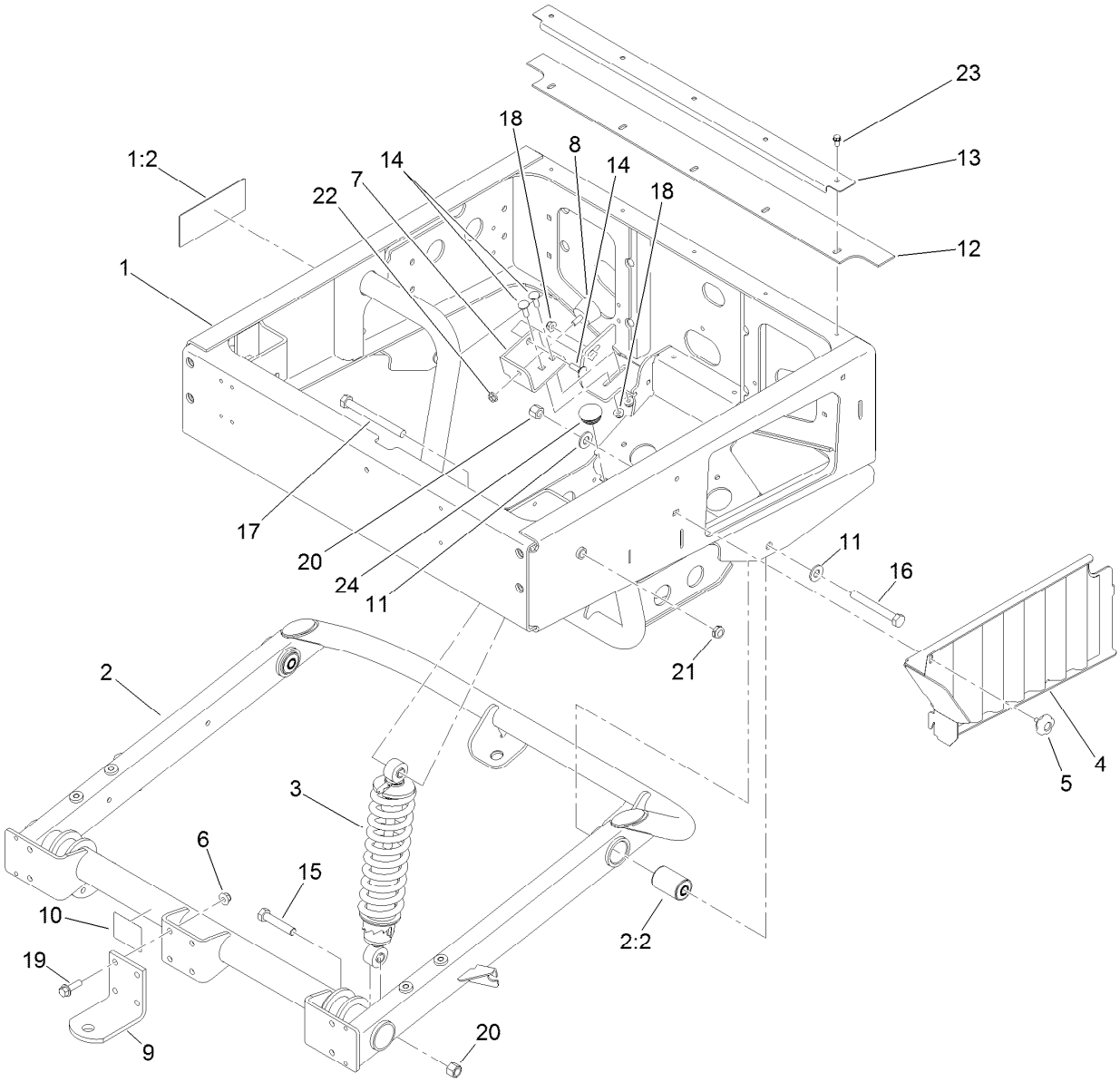

Rear Frame and Suspension Assembly

Ref.	Part Number	Qty.	Description
1	120-5052	1	Rear Frame ASM
1:2	99-7345	1	Decal-Warning
2	115-7614	1	Swing Arm ASM
2:2	112-3377	2	Bushing-Arm, Control
3	133-0553	2	Shock And Spring ASM
4	119-9597-03	1	Screen-Radiator
5	105-1406	1	Knob
6	104-8301	4	Nut-HF, NI
7	119-9743-03	1	Mount-Bumper
8	68-3270	1	Bumper-Rubber
9	99-7654-03	1	Hitch-Duty, Light
10	136-1164	1	Decal-Load, Towing
11	87-7270	4	Washer-Thrust

Ref.	Part Number	Qty.	Description
12	119-9728	1	Seal-Frame, Rear
13	119-9729-03	1	Reinforcement-Seal
14	3230-2	3	Bolt-CARR
15	325-10	2	Screw-HH
16	325-17	2	Screw-HH
17	325-19	2	Screw-HH
18	104-8300	3	Nut-HF, NI
19	3234-24	4	Screw-HHF
20	3296-23	4	Nut-Lock, NI
21	3296-45	2	Nut-Hex
22	32128-20	1	Nut-HF
23	32144-4	5	Screw-HWH
24	117-0946	1	Plug-Plastic

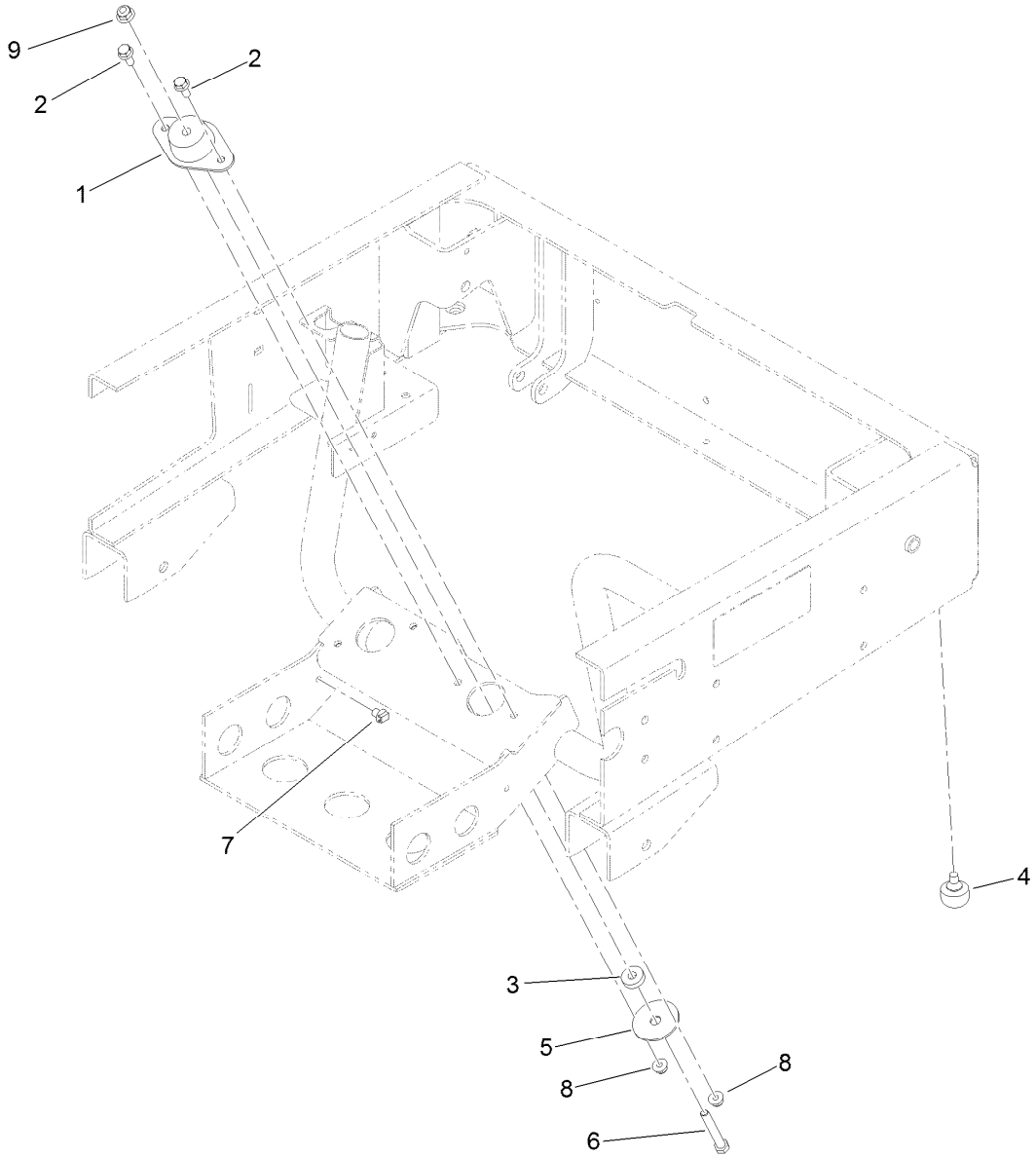

Diesel Engine Mount Assembly

Ref.	Part Number	Qty.	Description
1	119-9745	4	Mount-Engine
2	3234-47	8	Screw-HHF
3	62-6660	4	Spacer
4	87-2440	2	Bumper-Rubber
5	87-5100	4	Washer-Snubbing
6	323-12	4	Screw-HH
7	32180-030	1	Clip-Tie
8	104-8300	8	Nut-HF, NI
9	104-8301	4	Nut-HF, NI

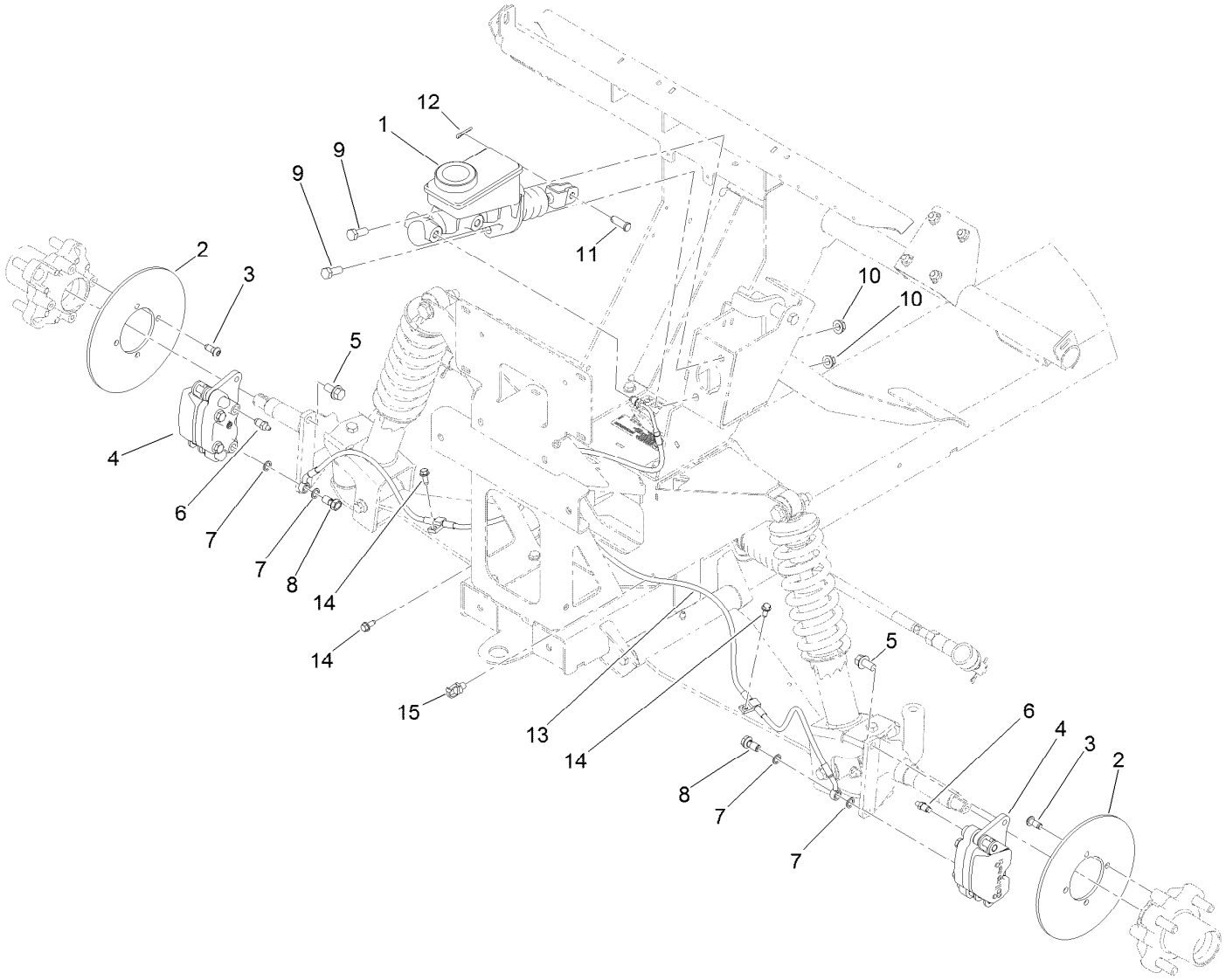

Front Brake Assembly

Ref.	Part Number	Qty.	Description
1	104-6782	1	Master Cylinder ASM
2	136-6295	2	Rotor-Brake
3	121-9671	8	Screw-HSBH
4	127-7424	2	Brake Caliper ASM
5	3234-1	4	Screw-HHF
6	119-9509	2	Screw-Bleed
7	115-2341	4	Washer-Banjo
8	120-4875	2	Bolt-Flange, Banjo
9	323-6	2	Screw-HH
10	3290-357	2	Nut-HHF, Whiz
11	283-2	1	Pin-Clevis
12	3272-10	1	Pin-Cotter
13	132-6793	1	Line-Brake, Front
14	32144-10	3	Screw-HWH
15	32180-030	1	Clip-Tie

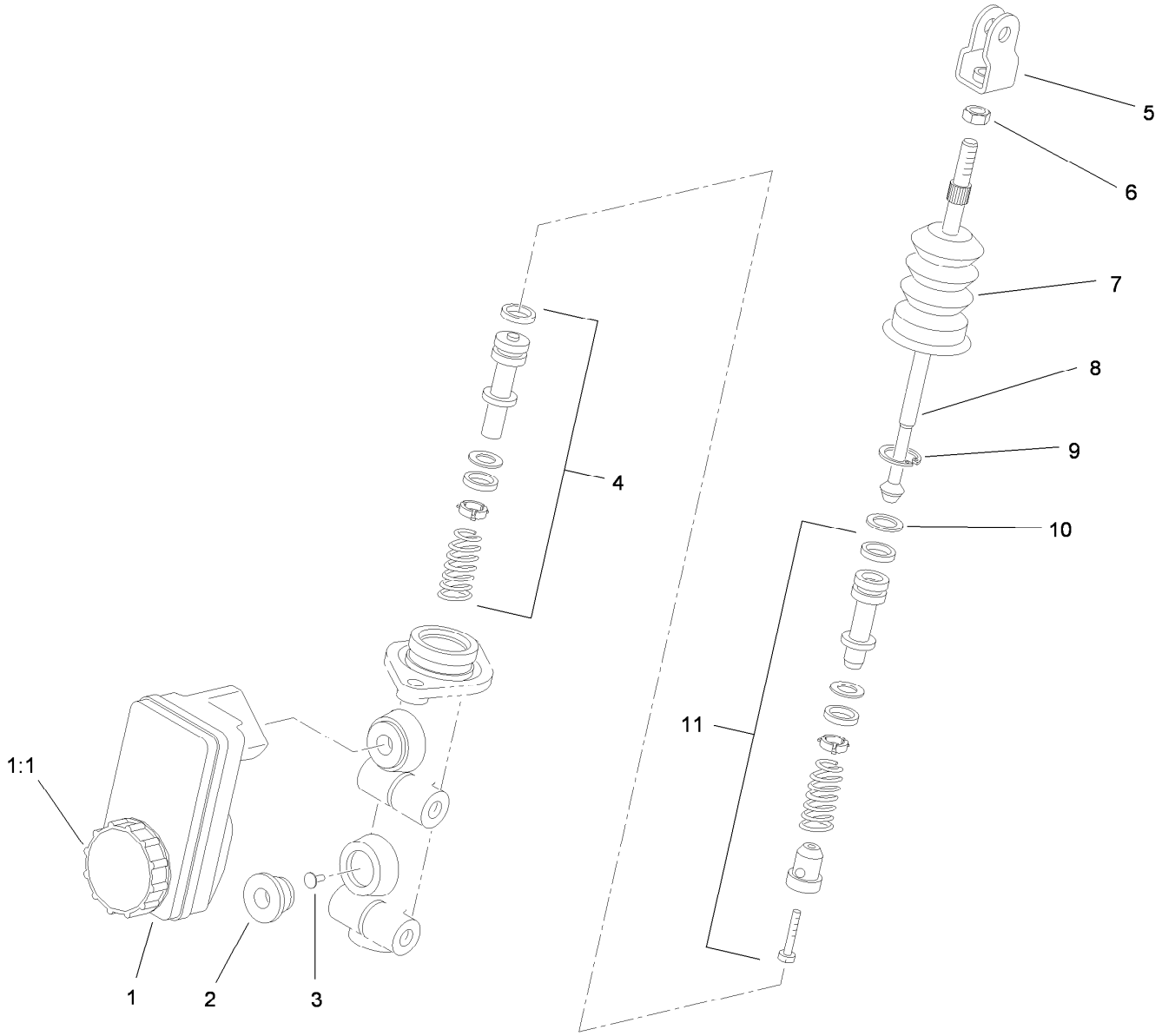

Master Cylinder Assembly No. 104-6782

Ref.	*Part Number*	*Qty.*	*Description*
1	104-6845	1	Reservoir ASM
1:1	92-4112	1	Cap ASM
2	93-8971	2	Seal-Port, Flange
3	92-4103	1	Pin-Stop
4	92-4102	1	Secondary Piston ASM
5	92-4110	1	Clevis
6	21-0360	1	Nut-Hex
7	94-5209	1	Cover-Dust
8	94-5210	1	Rod-Push
9	92-4109	1	Ring-Snap
10	92-4108	1	Retainer-Washer
11	92-4101	1	Primary Piston ASM

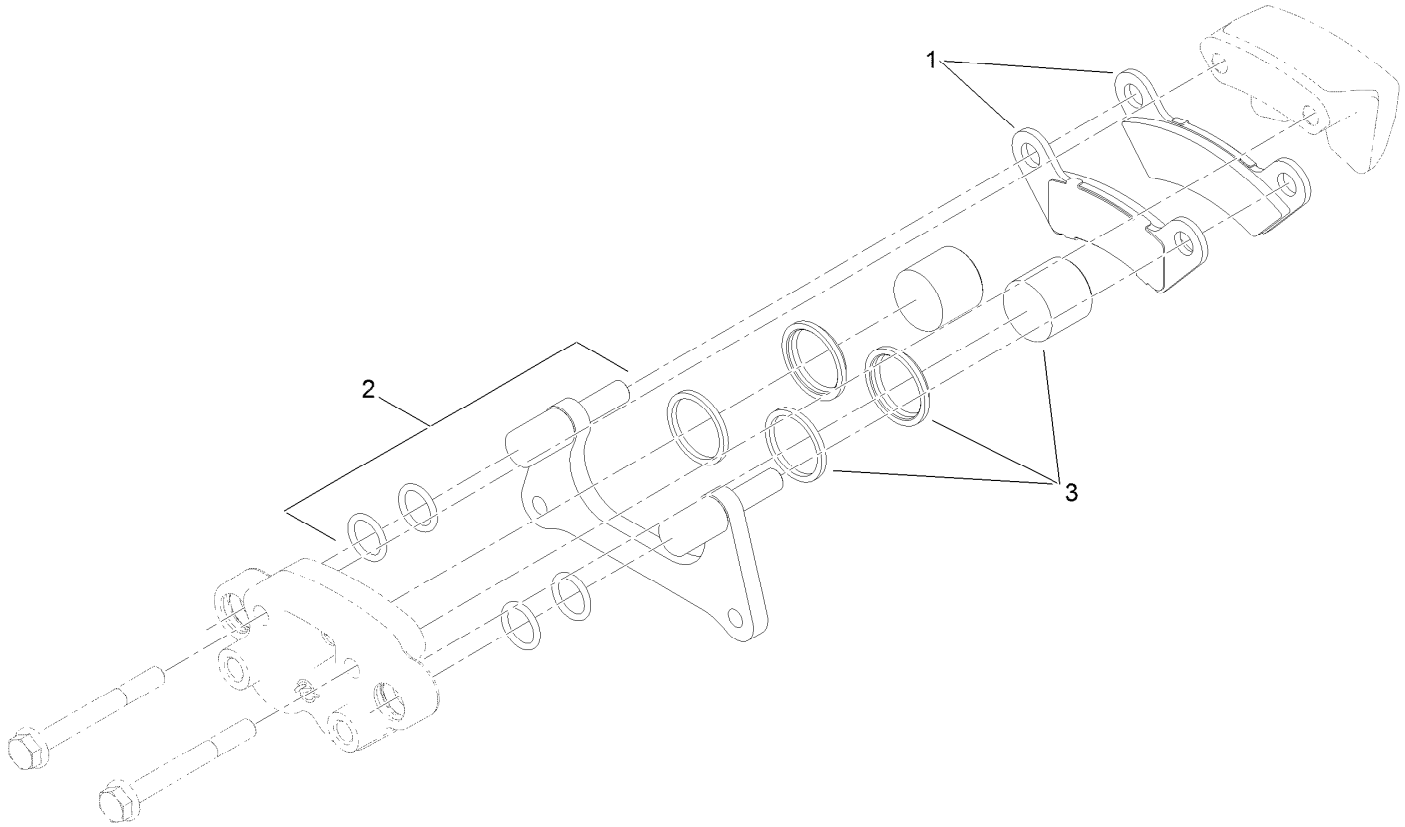

Brake Caliper Assembly No. 127-7424

Ref.	*Part Number*	*Qty.*	*Description*
1	119-9510	1	Pads-Brake
2	119-9511	1	Bracket Kit
3	133-0614	1	Piston Kit

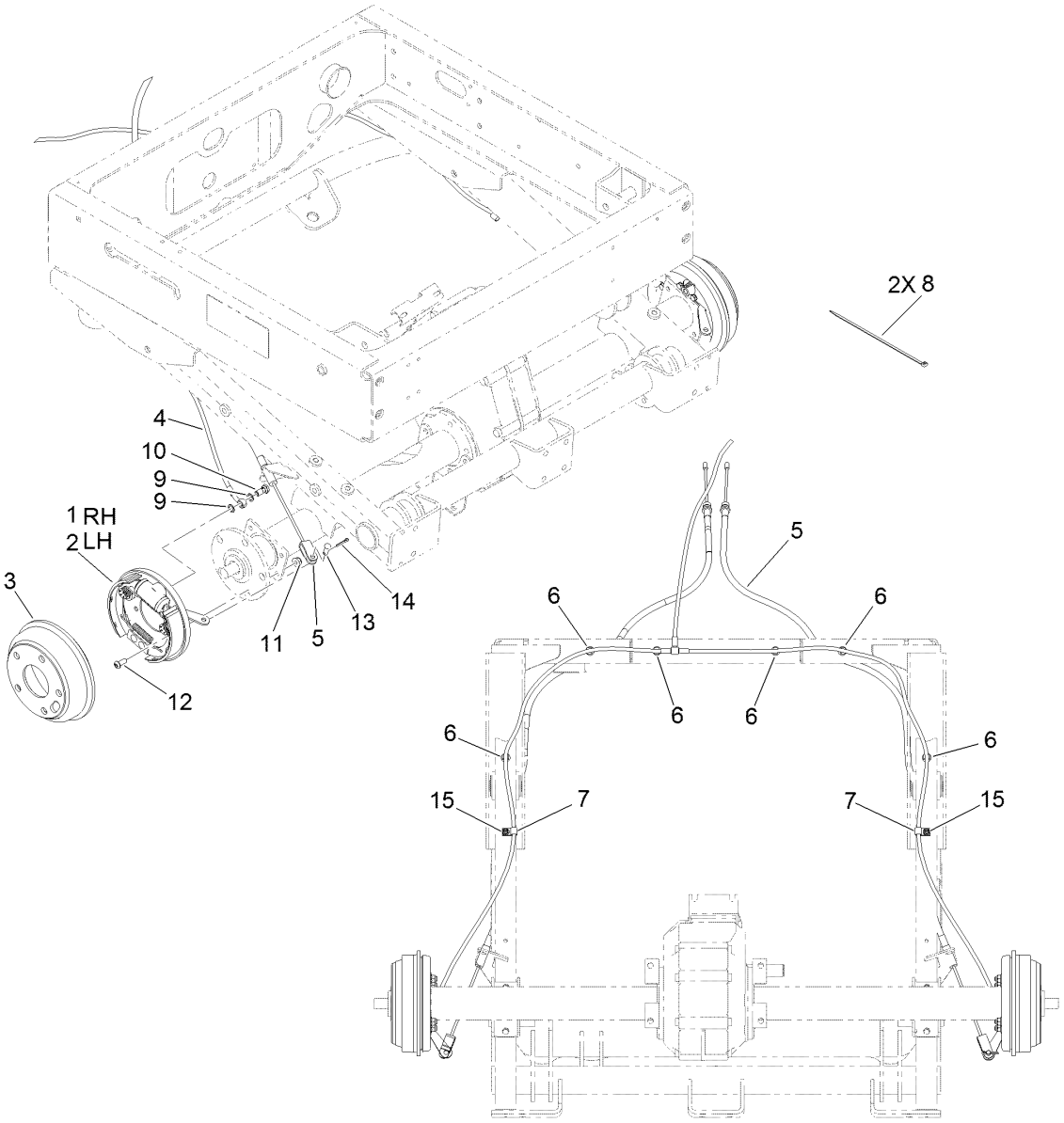

Rear Brake Assembly

Ref.	Part Number	Qty.	Description
1	114-8331	1	RH Brake ASM
2	114-8332	1	LH Brake ASM
3	104-6500	2	Drum-Brake
4	112-2926	1	Rear Brake Line ASM
5	127-8684	2	Cable-Brake, Adjustable
6	32180-030	6	Clip-Tie
7	2412-89	2	Clamp-R
8	3290-378	2	Tie-Cable
9	115-2341	4	Washer-Banjo
10	115-2340	2	Bolt-Banjo
11	104-8300	8	Nut-HF, NI
12	3274-55	8	Screw-HSBH
13	283-62	2	Pin-Clevis
14	3272-10	2	Pin-Cotter
15	32104-17	2	Screw-HWH

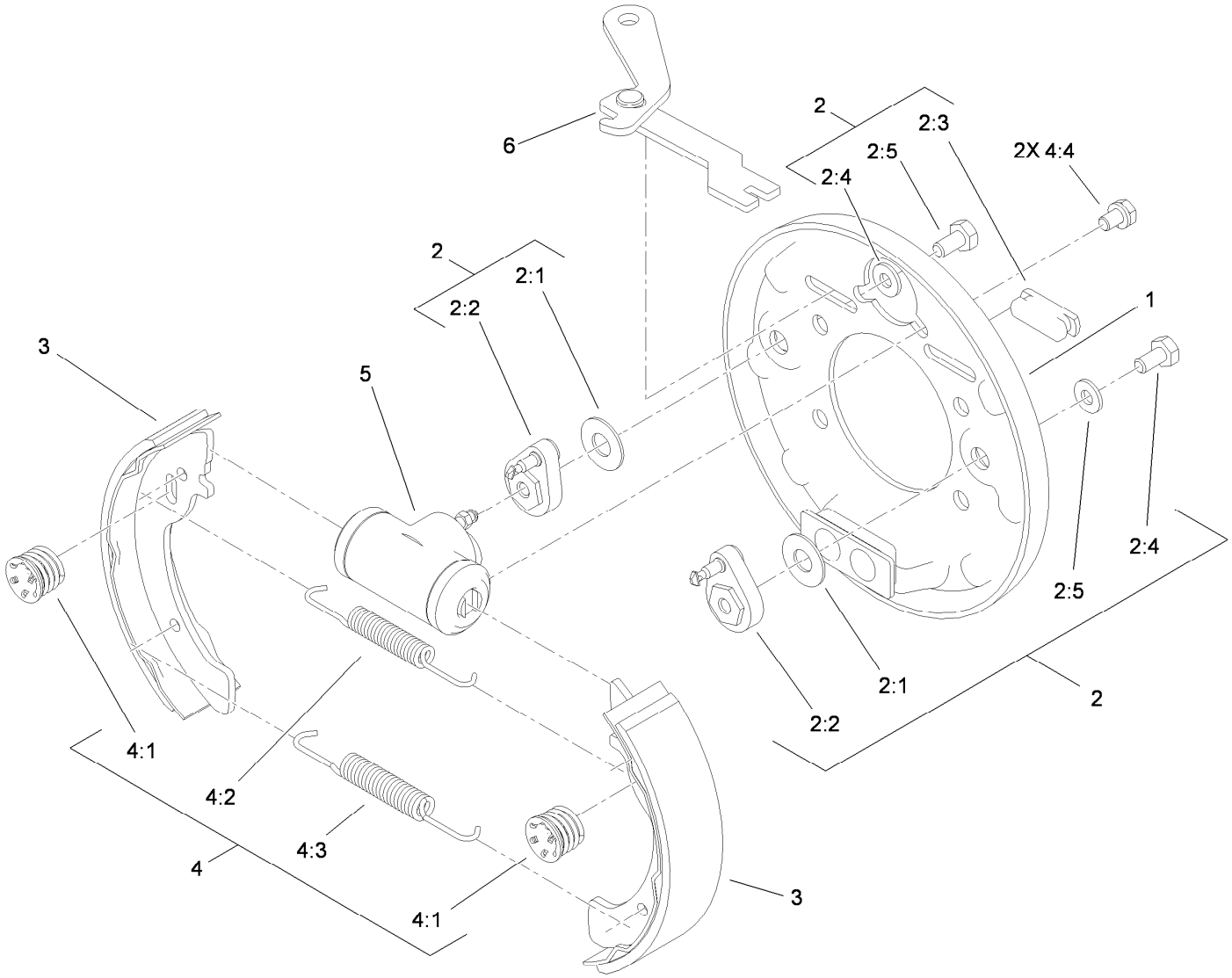

RH Rear Brake Assembly No. 114-8331

Ref.	*Part Number*	*Qty.*	*Description*
1	100-8586	1	Backing Plate ASM
2	104-6820	1	Adjuster Kit
2:1	100-8585	2	Washer-Bellville
2:2	100-8588	2	Adjuster Lever ASM
2:3	100-8584	2	Cover-Dust
2:4		2	Washer ●
2:5		2	Bolt ●
3	104-6818	4	Shoe And Lining Kit
4	104-6819	1	Hardware Kit
4:1	100-8583	2	Shoe Hold Down Spring ASM
4:2	100-8581	2	Spring-Upper
4:3	100-8582	2	Spring-Lower
4:4		2	Bolt And Washer ●
5	114-8333	1	Wheel Cylinder ASM
6	104-6826	1	RH Park Brake Lever ASM

● Not serviced separately

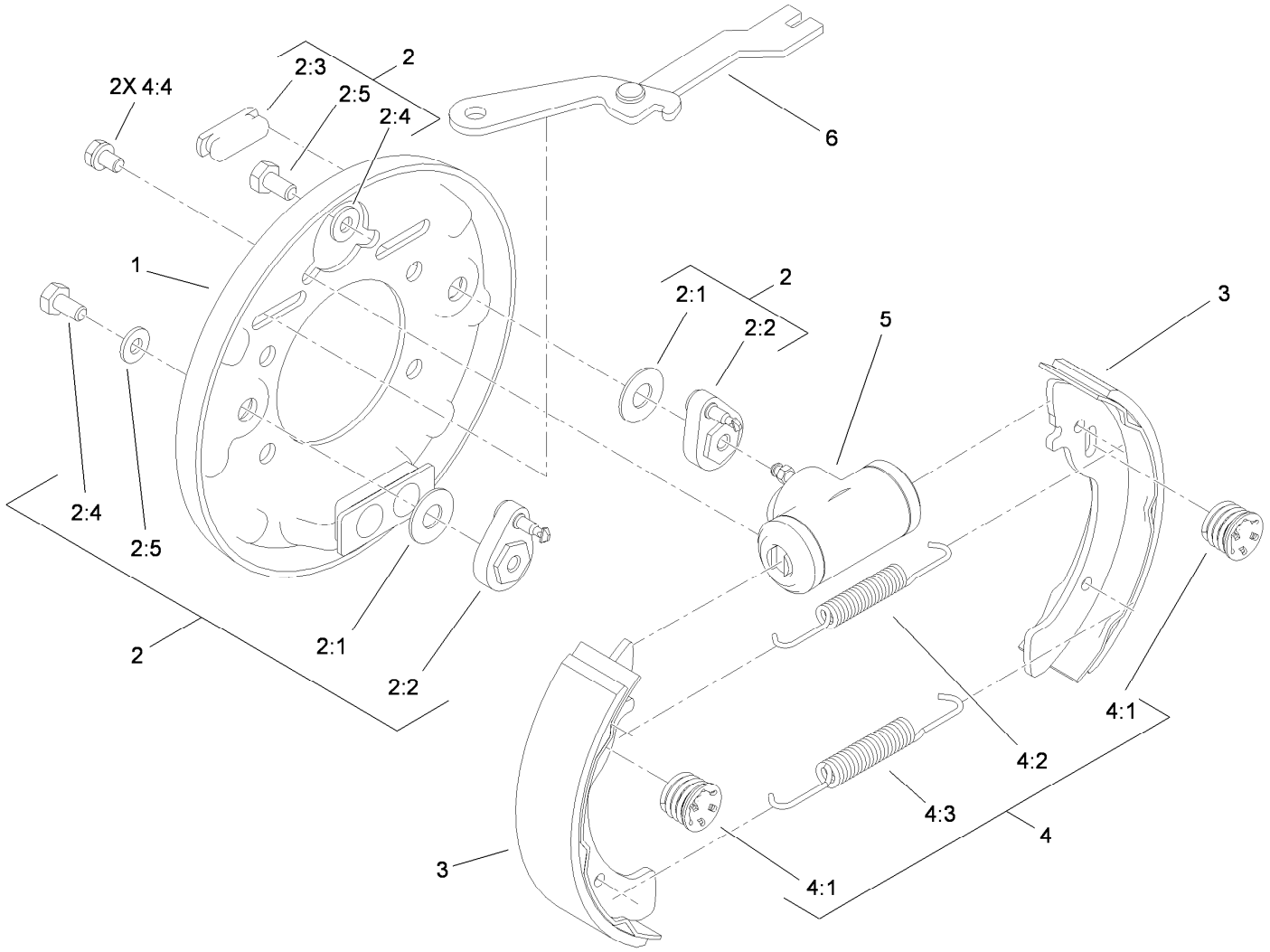

LH Rear Brake Assembly No. 114-8332

Ref.	Part Number	Qty.	Description
1	100-8586	1	Backing Plate ASM
2	104-6820	1	Adjuster Kit
2:1	100-8585	2	Washer-Bellville
2:2	100-8588	2	Adjuster Lever ASM
2:3	100-8584	2	Cover-Dust
2:4		2	Washer ●
2:5		2	Bolt ●
3	104-6818	4	Shoe And Lining Kit
4	104-6819	1	Hardware Kit
4:1	100-8583	2	Shoe Hold Down Spring ASM
4:2	100-8581	2	Spring-Upper
4:3	100-8582	2	Spring-Lower
4:4		2	Bolt And Washer ●
5	114-8333	1	Wheel Cylinder ASM
6	104-6825	1	LH Park Brake Lever ASM

● Not serviced separately

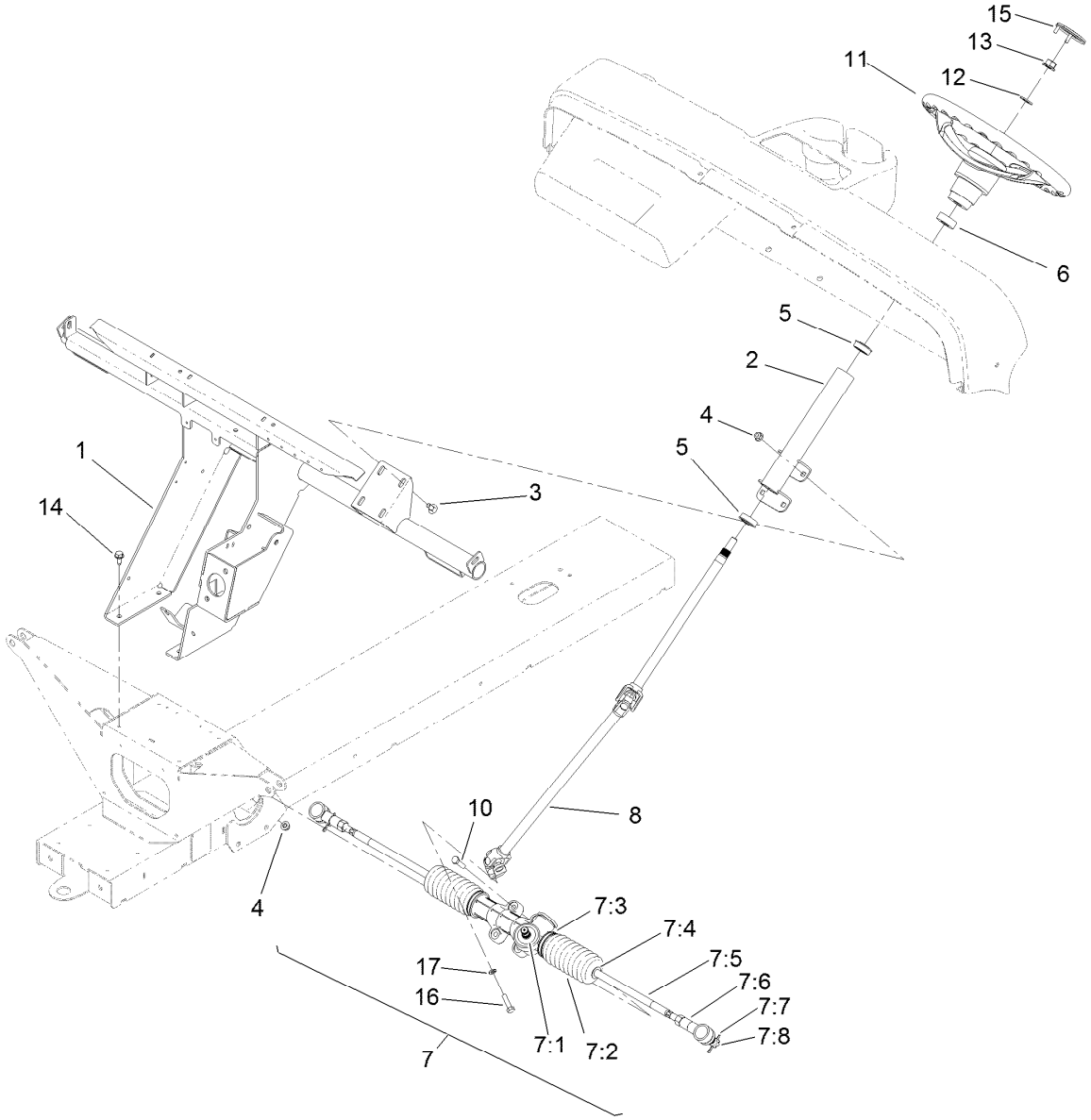

Steering Assembly

Ref.	Part Number	Qty.	Description
1	132-6740-03	1	Support-Dash
2	132-6760-03	1	Column-Steering
3	3230-1	4	Bolt-CARR
4	104-8300	8	Nut-HF, NI
5	112-3262	2	Bearing
6	21-9260	1	Cover-Dust
7	133-0576	1	Steering Rack ASM
7:1	133-0607	1	Seal-Shaft
7:2	133-0606	2	Bellows
7:3	133-0605	2	Clamp-Bellows, Inner
7:4	133-0604	2	Clamp-Bellows, Outer
7:5	133-0603	2	Track Tie Rod

Ref.	Part Number	Qty.	Description
7:6	133-0602	2	End-Rod, Track
7:7	3272-42	2	Pin-Cotter
7:8	137-9891	2	Nut-Slotted, Ball Joint
8	132-6763	1	Shaft-Steering
10	322-6	4	Screw-HH
11	131-0957	1	Wheel-Steering
12	3256-26	1	Washer-Flat
13	99-5107	1	Nut-Lock
14	32144-70	4	Screw-HWHTF
15	131-3630	1	Cap-Wheel, Steering
16	116-3515	1	Screw-HH, Special
17	3253-4	1	Washer-Lock

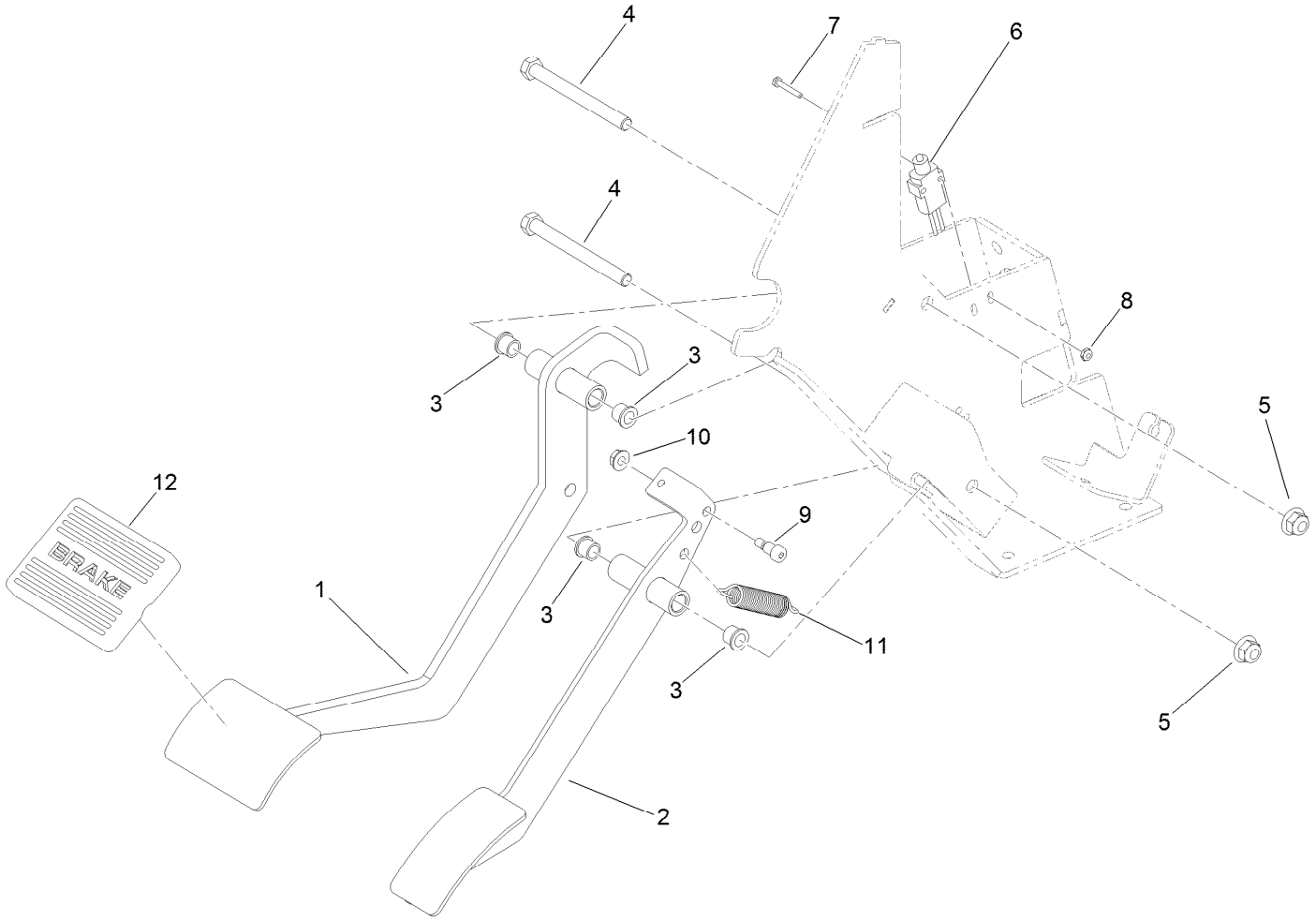

Pedal Assembly

Ref.	*Part Number*	*Qty.*	*Description*
1	132-6753-03	1	Pedal-Brake
2	132-6751-03	1	Pedal-Throttle
3	256-116	4	Bushing-Flange
4	323-16	2	Screw-HH
5	104-8301	2	Nut-HF, NI
6	95-8900	1	Switch
7	32105-9	2	Screw
8	3296-9	2	Nut-Hex
9	119-4881	1	Bolt-Shoulder
10	32128-33	1	Nut-HF
11	104-6415	1	Spring-Return, Pedal
12	7-3900	1	Pad-Brake

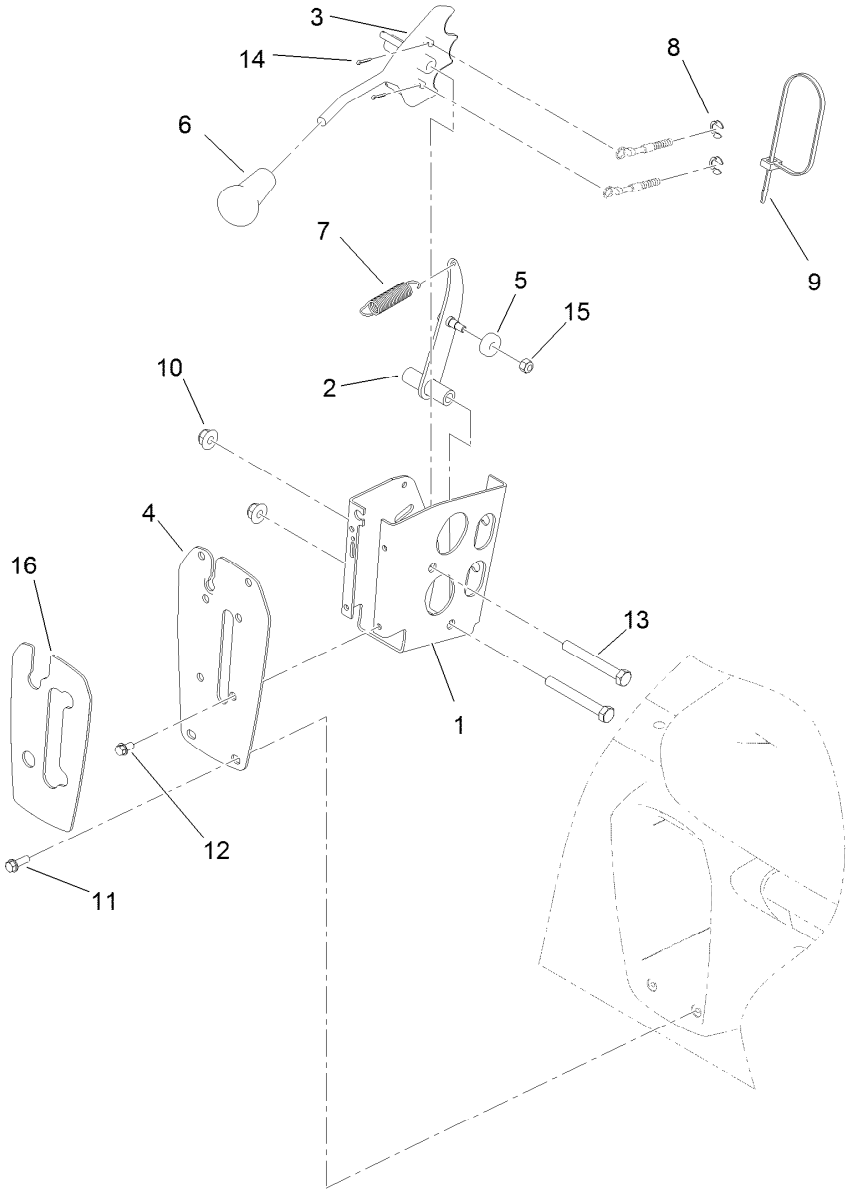

Shifter Assembly

Ref.	Part Number	Qty.	Description
1	108-3141-03	1	Bracket-Shift
2	108-3138	1	Arm-Detent
3	114-2719	1	Plate-Detent
4	99-7887-03	1	Plate-Shifter
5	251-307	1	Bearing-Ball
6	99-7981	1	Knob-Grip, Soft
7	104-6415	1	Spring-Return, Pedal
8	32151-101	2	E-Ring

Ref.	Part Number	Qty.	Description
9	3290-378	1	Tie-Cable
10	104-8301	2	Nut-HF, NI
11	32105-15	4	Screw-HWH
12	32144-4	4	Screw-HWH
13	323-14	2	Screw-HH
14	3272-5	2	Pin-Cotter
15	3296-42	1	Nut-Lock, NI
16	99-7952	1	Decal-Shifter

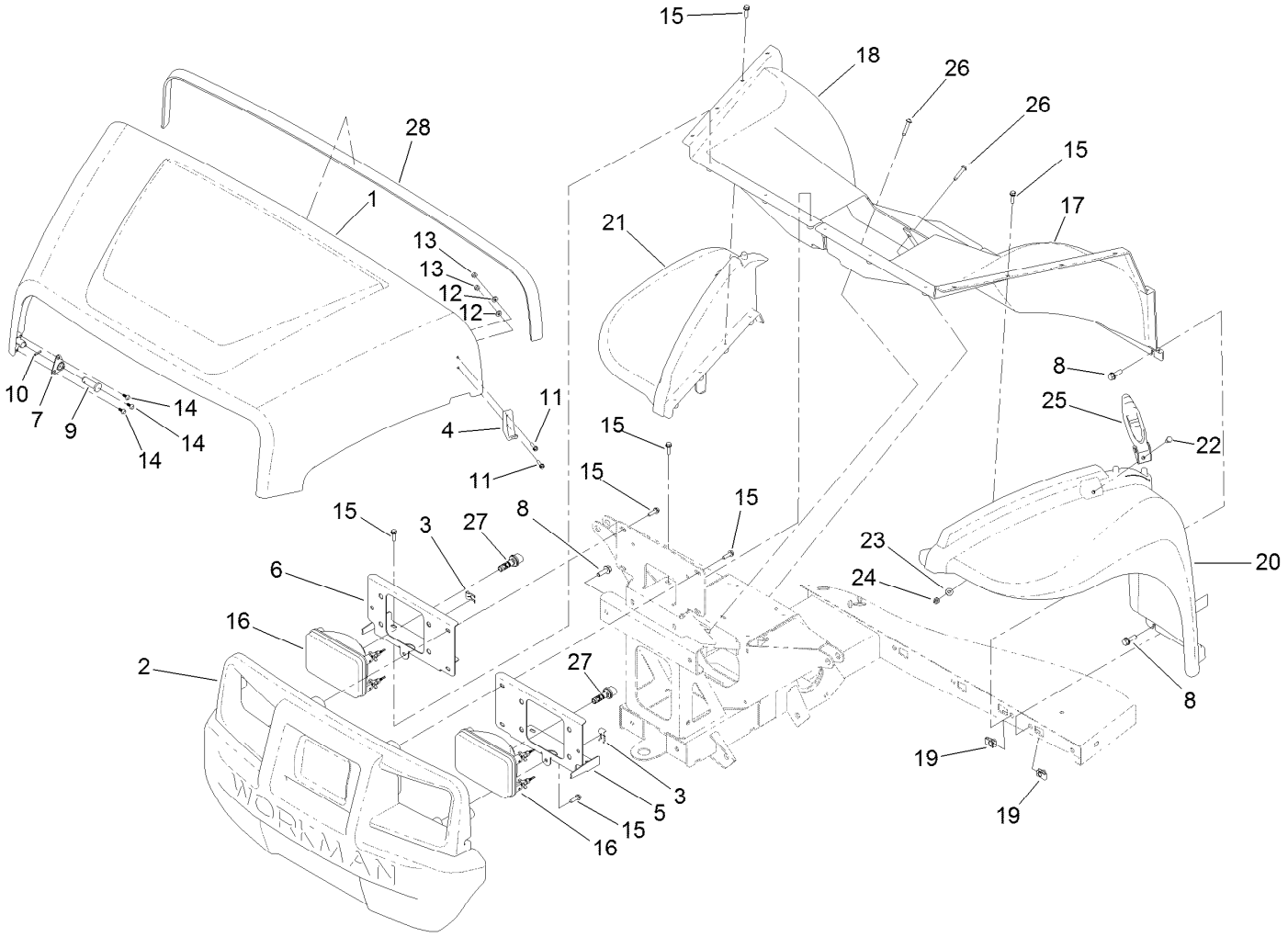

Hood and Fender Assembly

Ref.	Part Number	Qty.	Description
1	136-6281	1	Hood
2	132-8530	1	Bumper
3	115-2408	6	Clip-Speed
4	103-2897	2	Latch-Catch
5	132-6788-03	1	Bracket-Headlight, LH
6	132-6789-03	1	Bracket-Headlight, RH
7	112-3308	2	Retainer-Pin
8	3234-29	12	Screw-HHF
9	117-5094	2	Pin-Clevis
10	32121-50	2	Pin-Spring
11	32105-13	4	Screw-HWH
12	3256-14	4	Washer-Flat
13	3296-2	4	Nut-Lock, NI
14	121-9605	6	Screw-HWH

Ref.	Part Number	Qty.	Description
15	46-8091	24	Screw-HWH
16	136-6318	2	Housing-Headlight, 12V
17	132-6775	1	Fender-Inner, LH
18	132-6776	1	Fender-Inner, RH
19	112-3306	10	Nut
20	112-3371	1	Fender-LH
21	112-3370	1	Fender-RH
22	321-39	2	Screw-HH
23	3256-22	2	Washer-Flat
24	3296-42	2	Nut-Lock, NI
25	115-2416	2	Latch-Rubber
26	132-6777	4	Screw-TTH
27	133-0574	2	Bulb-LED
28	115-7635	1	Seal-Foam

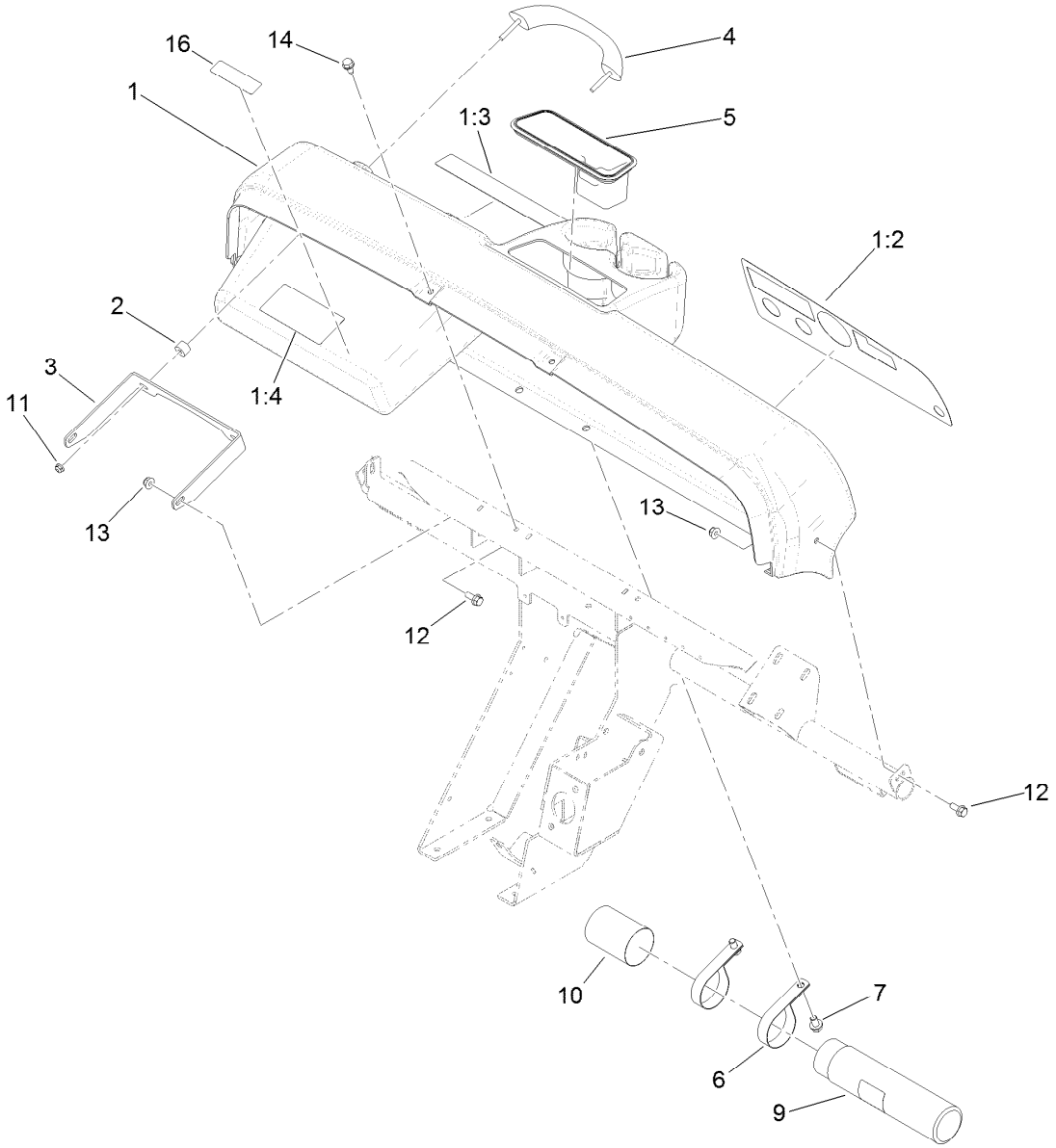

Dash Assembly

Ref.	Part Number	Qty.	Description
1	119-9726	1	Dash ASM
1:2	119-9727	1	Decal-Panel, Control
1:3	121-9775	1	Decal-Danger
1:4	115-2412	1	Decal-No Storage
2	114-8301	2	Spacer
3	112-3391-03	1	Bracket-Grip, Handle
4	112-3320	1	Handle-Grip
5	104-6930	1	Plug-Rubber
6	2412-133	2	Clamp-R

Ref.	Part Number	Qty.	Description
7	32144-69	2	Screw-HWHTF
9	104-7050	1	Tube-Manual
10	104-7048	1	Cap-Housing
11	104-7201	2	Nut-HF
12	110-5053	3	Screw-HHF
13	104-8300	3	Nut-HF, NI
14	32144-70	6	Screw-HWHTF
16	120-4837	1	Decal-Fuse Block

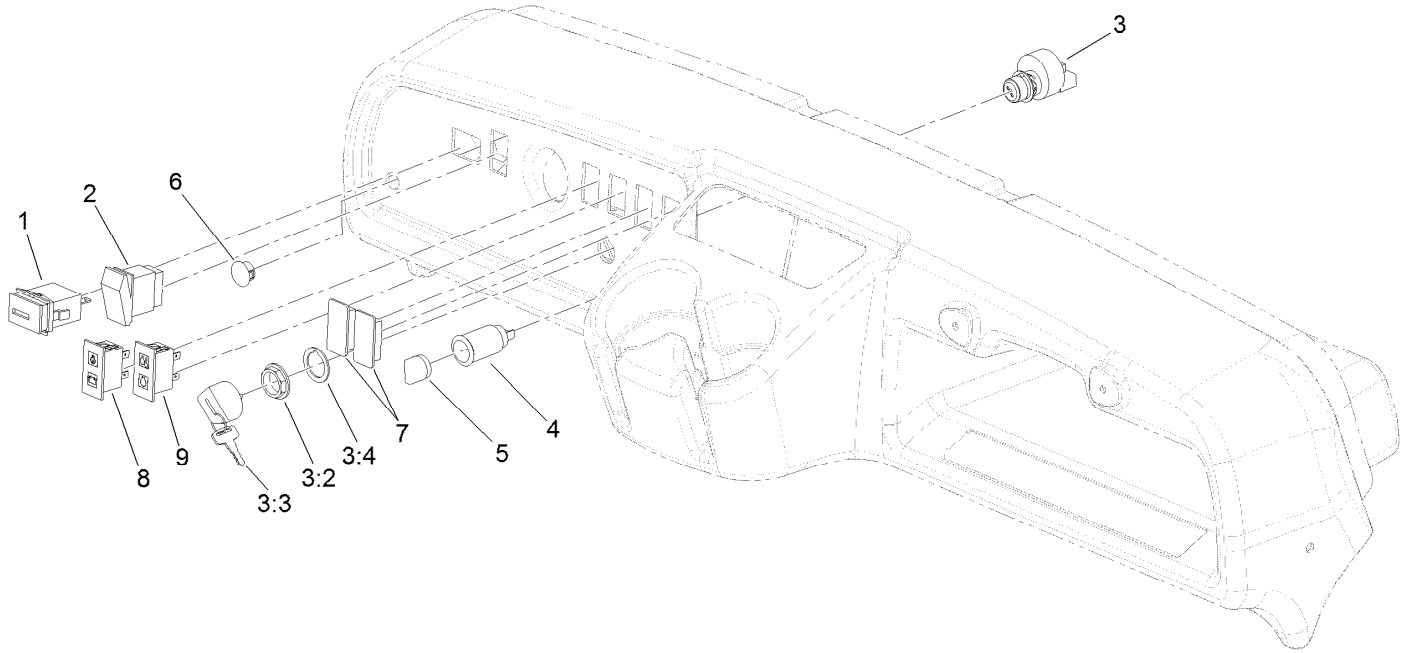

Control Panel Assembly

Ref.	*Part Number*	*Qty.*	*Description*
1	94-4208	1	Hourmeter
2	95-8999	1	Switch
3	106-5269	1	Ignition Switch ASM
3:2	108-8660	1	Nut-Mounting
3:3	106-5270	1	Ignition Key Set
3:4	108-8659	1	Washer-Backup
4	99-7411	1	Point-Power
5	99-7416	1	Cap
6	94-5627	1	Plug
7	99-7420	2	Plug-Hole
8	100-8070	1	Lamp-Warning
9	100-8071	1	Lamp-Warning

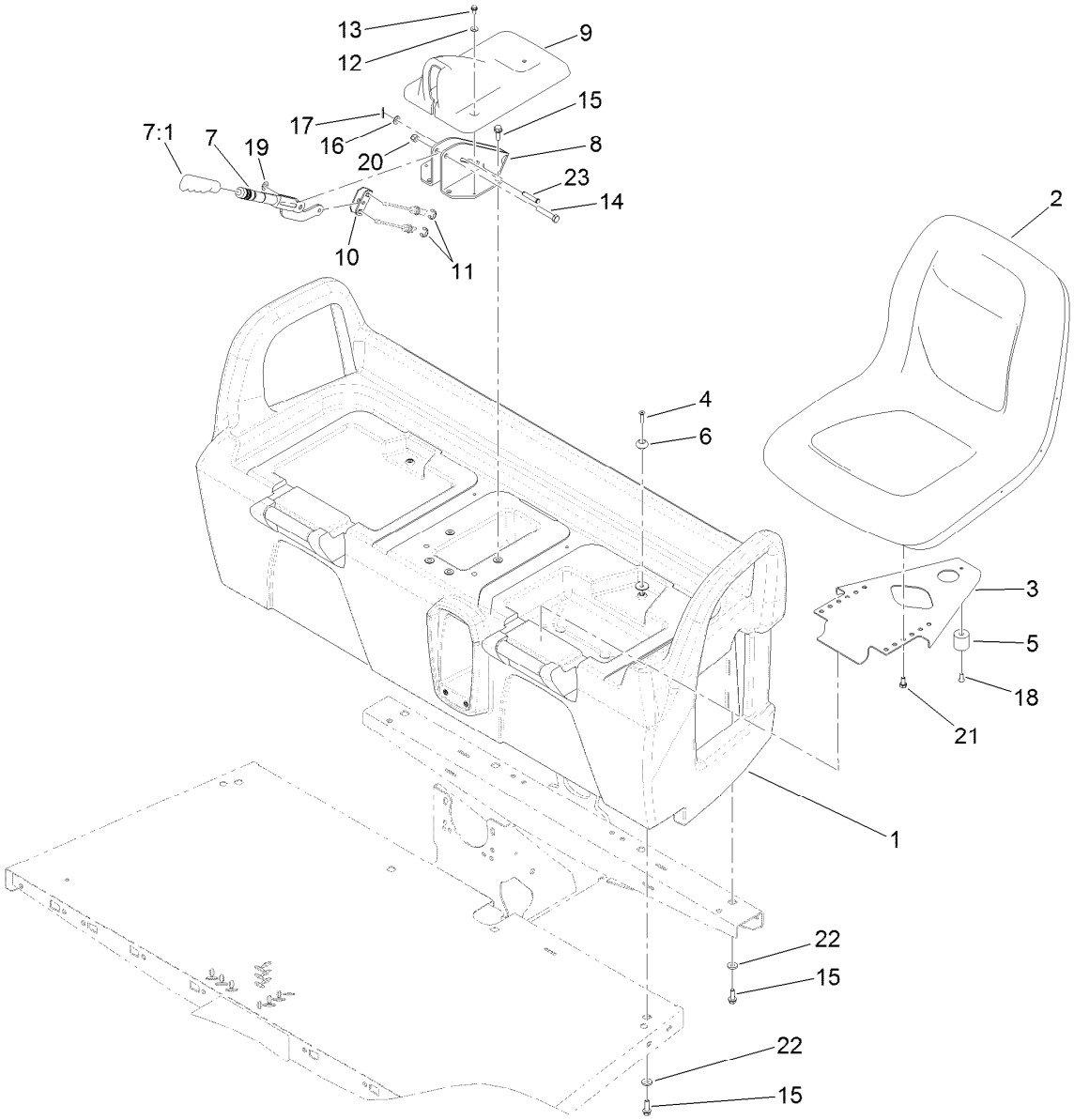

Seatbase Assembly

Ref.	Part Number	Qty.	Description
1	104-6847	1	Base-Seat
2	133-0577	2	Seat ASM
3	99-7829	2	Bracket-Seat
4	32108-5	2	Screw-FH
5	99-7830	2	Receptical-Rubber
6	99-7833	2	Post-Holding
7	127-8863	1	Lever-Brake, Park
7:1	127-8864	1	Grip-Handle
8	104-6844-03	1	Support-Brake, Park
9	104-7014	1	Cover-Brake, Parking
10	87-3480	1	Bracket-Equalizer, Cable
11	32120-47	2	Ring-Retaining, External

Ref.	Part Number	Qty.	Description
12	3256-1	4	Washer-Flat
13	32144-4	2	Screw-HWH
14	323-10	1	Screw-HH
15	3234-17	12	Screw-HHF
16	3256-23	1	Washer-Plain
17	3272-6	1	Pin-Cotter
18	3290-412	2	Rivet-Blind
19	3290-477	1	Washer-Curved
20	3296-39	1	Nut-Lock, NI
21	33114-016	8	Screw-HH
22	88-7200	8	Washer-Flat
23	94-3829	1	Pin-Clevis

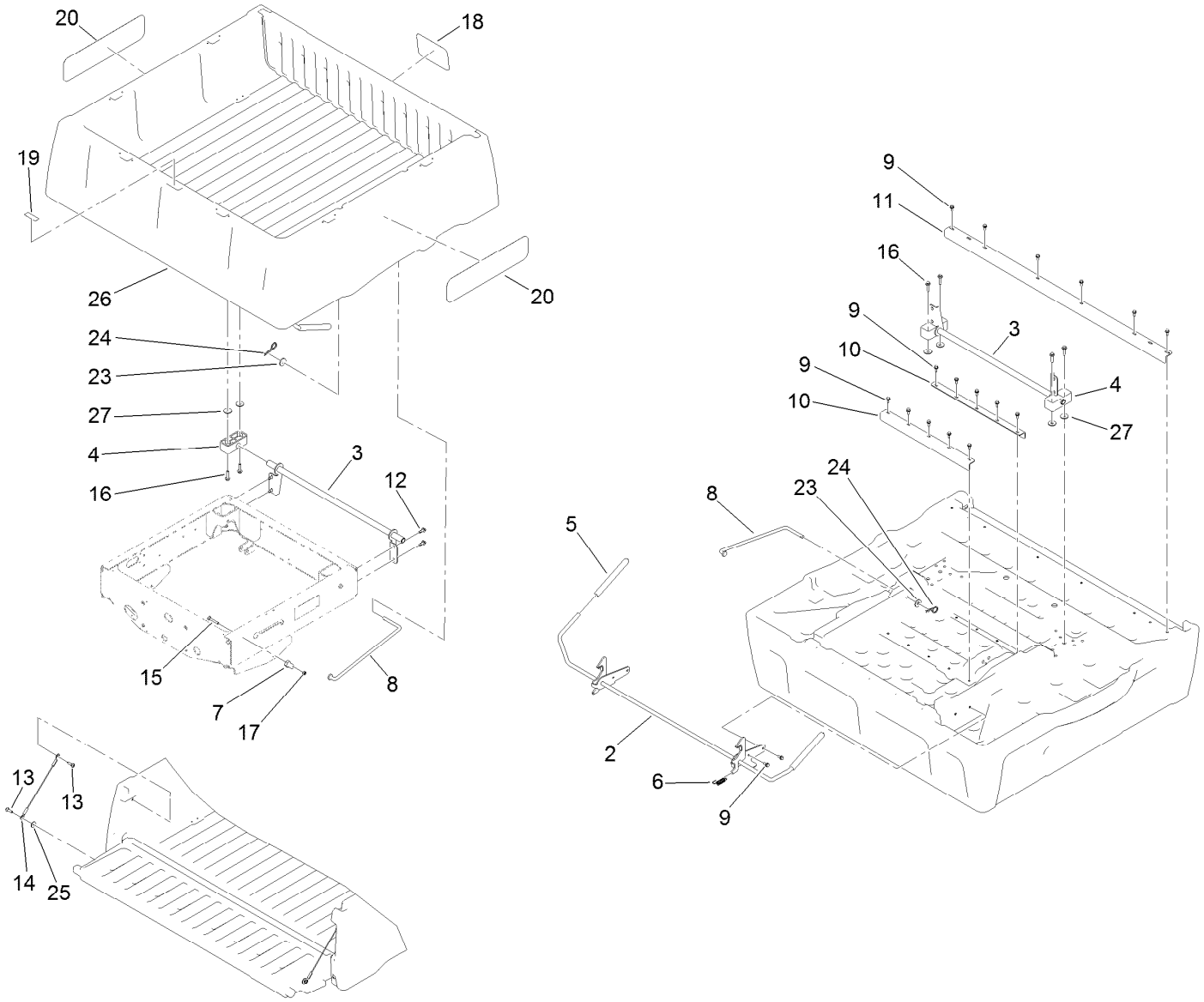

Cargo Bed Assembly

Ref.	Part Number	Qty.	Description
2	121-6344	1	Latch
3	133-0625-03	1	Bracket-Pivot
4	121-6342	2	Bushing-Pivot
5	119-9627	2	Grip-Handle
6	5-7290	2	Spring-Tension
7	104-7248	2	Pin-Latch
8	121-6316	1	Rod-Prop
9	3234-5	20	Screw-HHF
10	121-6314-03	2	Brace-Bed, Middle
11	121-6315-03	1	Brace-Bed, Rear
12	105-6245	4	Screw-Tapping
13	119-2267	4	Screw-Shoulder, BHTF

Ref.	Part Number	Qty.	Description
14	121-6343	2	Lanyard-Tailgate
15	3230-7	2	Bolt-CARR
16	3234-18	4	Screw-HHF
17	3296-29	2	Nut-Lock, NI
18	104-7213	1	Decal
19	115-7739	1	Decal-No Riders
20	120-4826	2	Decal
23	110-6147	1	Washer-Flat
24	107-3155	1	Hairpin
25	115-7109	2	Washer-Flat
26	133-0560	1	Cargo Bed/Tailgate ASM
27	87-5330	4	Washer

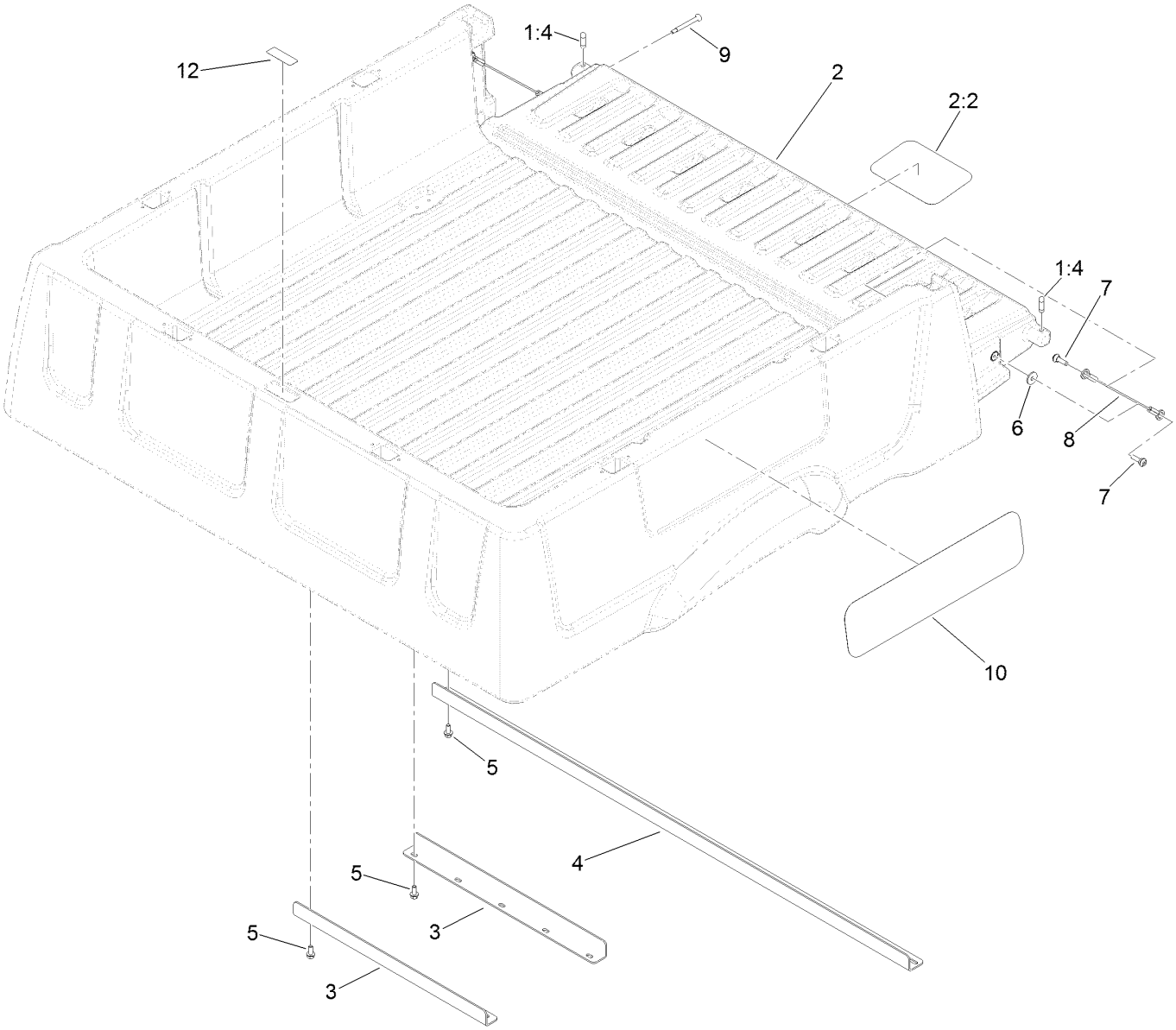

Cargo Bed and Tailgate Service Assembly No. 133-0560

Ref.	Part Number	Qty.	Description
1		1	Cargo Bed/Tailgate ASM ●■
1:4	133-7146	2	Plug-Tailgate, Anti-Rattle
2	133-0561	1	Tailgate ASM W/Decals
2:2	104-7213	1	Decal
3	121-6314-03	2	Brace-Bed, Middle
4	121-6315-03	1	Brace-Bed, Rear
5	3234-5	16	Screw-HHF
6	115-7109	2	Washer-Flat
7	119-2267	4	Screw-Shoulder, BHTF
8	121-6343	2	Lanyard-Tailgate
9	127-7383	2	Screw-Shoulder, Bh (Torx)
10	120-4825	2	Decal
12	115-7739	1	Decal-No Riders

● Not illustrated

■ Not serviced separately

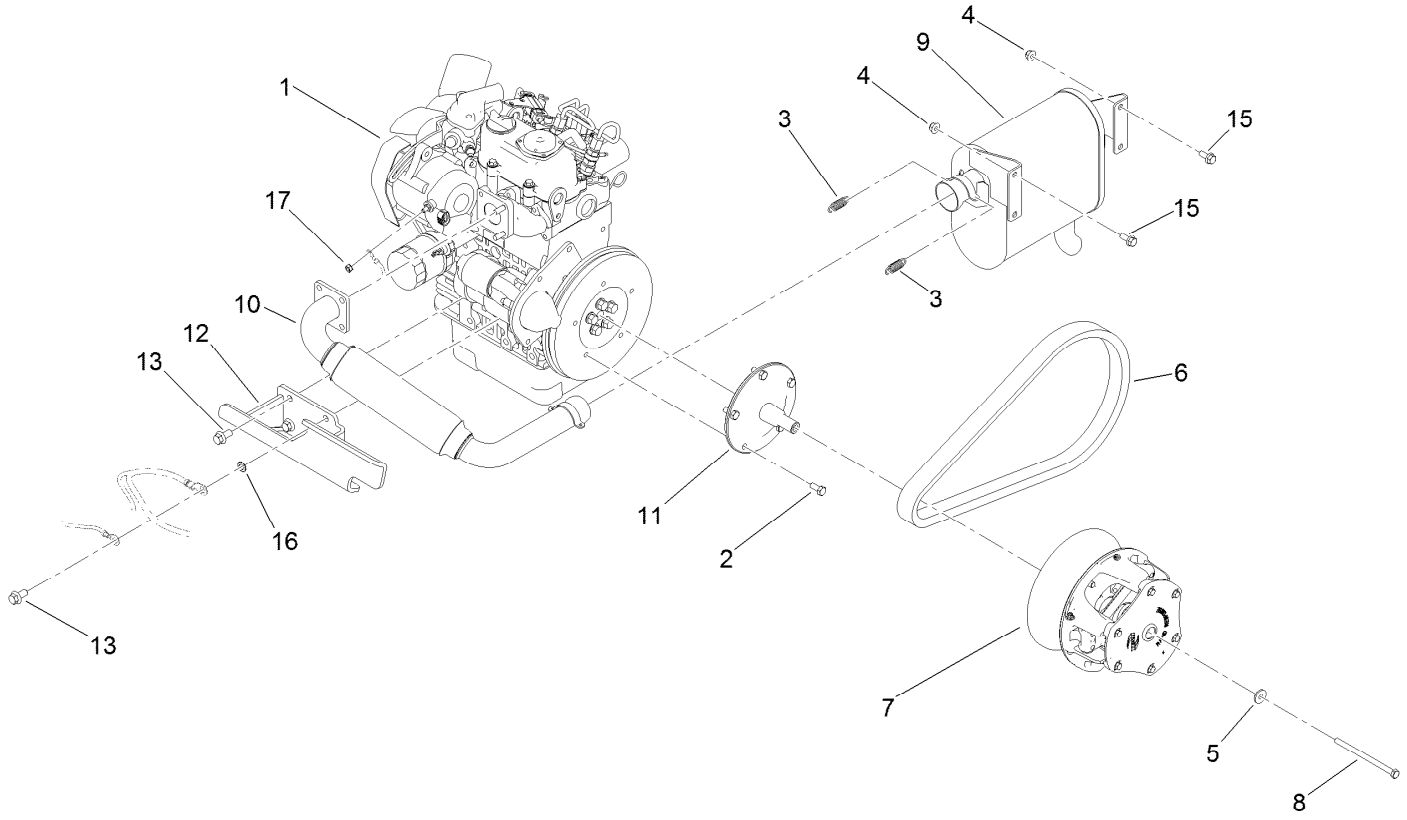

Engine, Primary Clutch and Exhaust Assembly

Ref.	Part Number	Qty.	Description
1	138-6900	1	Engine-Kubota, Z602
2	33114-016	5	Screw-HH
3	104-6478	2	Spring-Extension
4	104-8300	4	Nut-HF, NI
5	119-0724	1	Washer-Flange
6	119-0934	1	Belt-Cvt
7	119-9610	1	Clutch-Primary
8	107-0277	1	Screw-HH

Ref.	Part Number	Qty.	Description
9	119-9715	1	Muffler-Exhaust
10	119-9716	1	Header-Exhaust
11	119-9722	1	Adapter-Clutch
12	120-4940-03	1	Front Engine Mount ASM
13	120-4839	4	Screw-HHF
15	3234-47	4	Screw-HHF
16	3255-9	1	Washer-Lock
17	98-5845	1	Nut-Hex

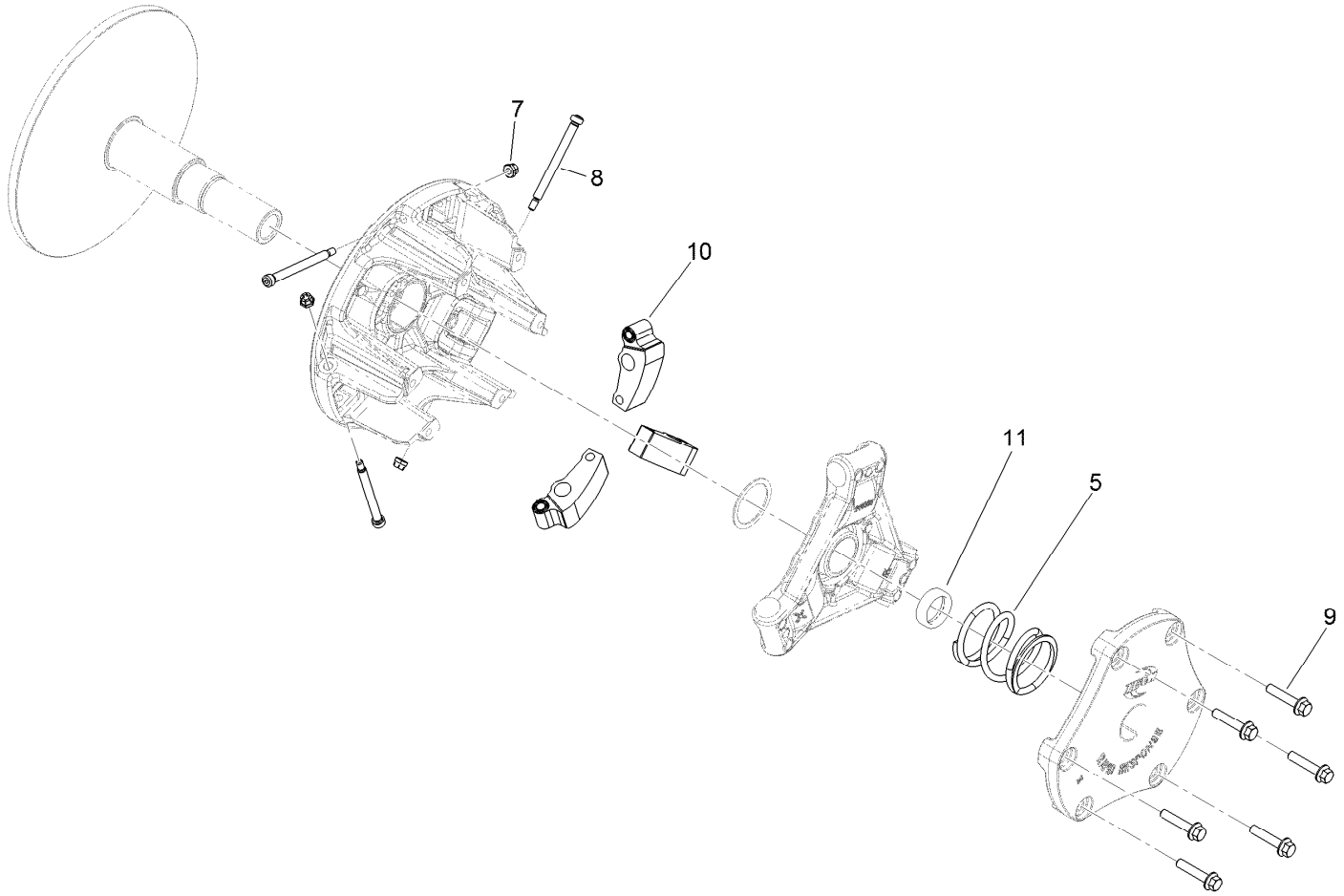

Primary Clutch Assembly No. 119-9610

Ref.	*Part Number*	*Qty.*	*Description*
5	120-4807	1	Spring-Compression
7	119-6015	3	Nut-Hex, Lock
8	119-6016	3	Screw-Shoulder
9	119-6017	6	Screw-HF
10	119-6019	3	Weight-Clutch
11	120-4803	1	Shim-Limiter, Speed

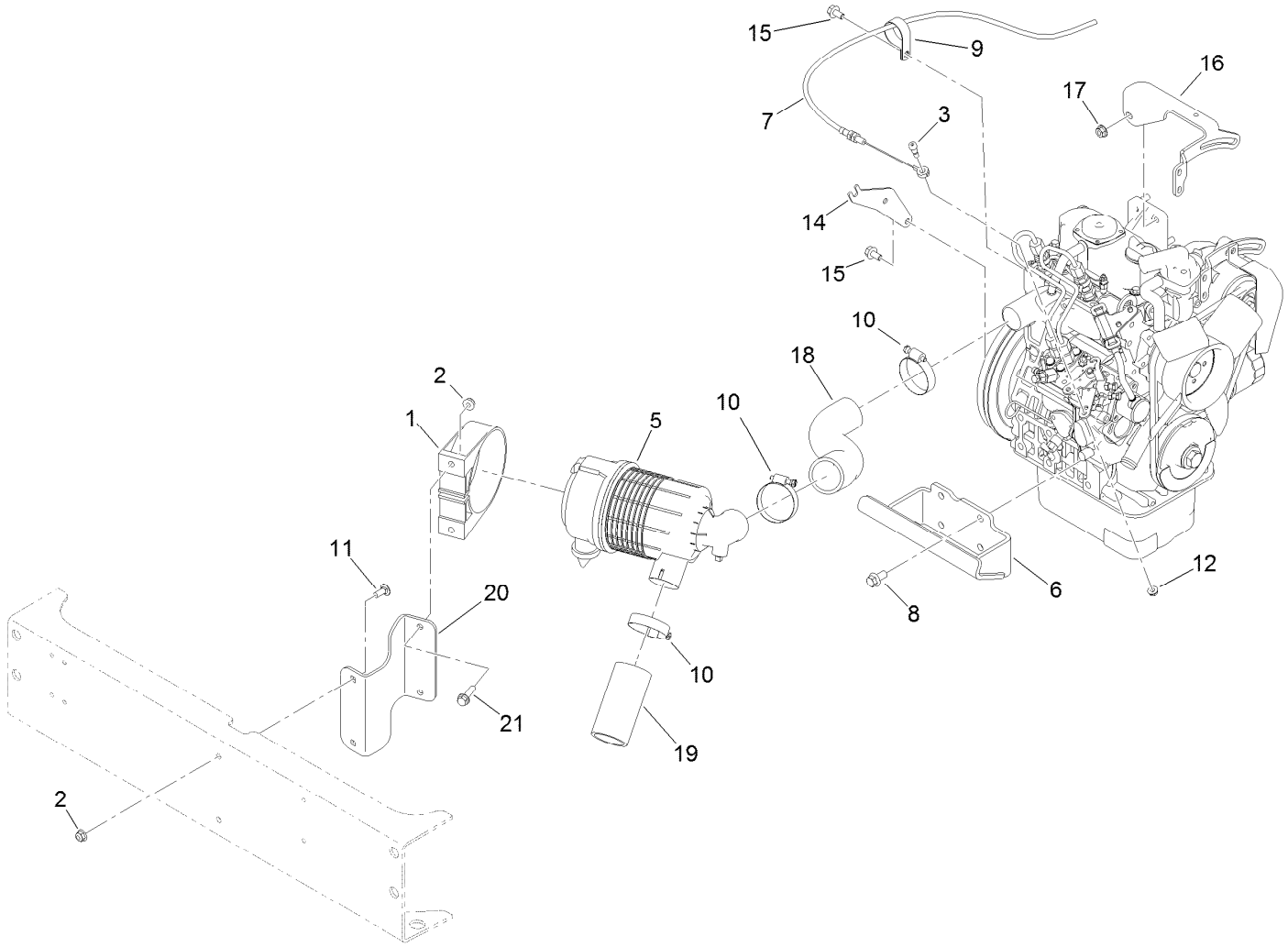

Air Cleaner and Throttle Cable Assembly

Ref.	Part Number	Qty.	Description
1	95-5806	1	Bracket-Mounting
2	104-8300	4	Nut-HF, NI
3	119-4881	1	Bolt-Shoulder
5	119-9714	1	Air Cleaner ASM
6	119-9739-03	1	Mount-Engine, Rear
7	119-9746	1	Cable-Throttle
8	120-4839	4	Screw-HHF
9	2412-74	1	R-Clamp
10	2412-92	3	Clamp-Hose
11	3230-23	2	Screw-CARR

Ref.	Part Number	Qty.	Description
12	32128-33	1	Nut-HF
14	119-9453-03	1	Mount-Cable, Throttle
15	33104-016	2	Screw-HHF
16	120-4847-03	1	Bracket-Alternator
17	112-2844	1	Nut-HF
18	131-6665	1	Hose-Intake
19	93-6724	1	Hose-Intake
20	131-6664-03	1	Bracket-Mount
21	3234-36	2	Screw-HHF

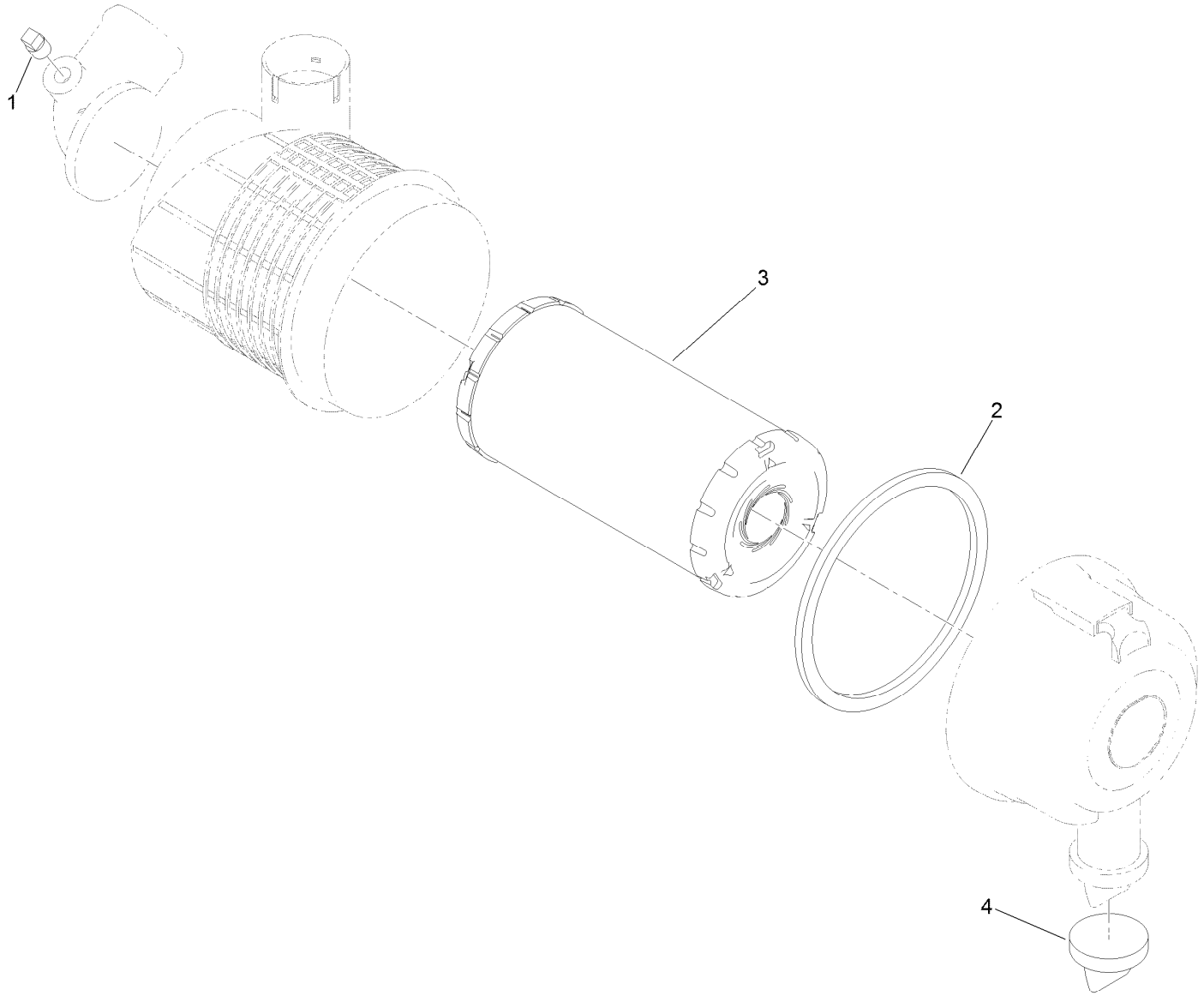

Air Cleaner Assembly No. 119-9714

Ref.	*Part Number*	*Qty.*	*Description*
1	285-17	1	Plug-Pipe
2	106-6748	1	Gasket
3	108-3811	1	Filter-Air
4	104-0498	1	Valve-Vacuator

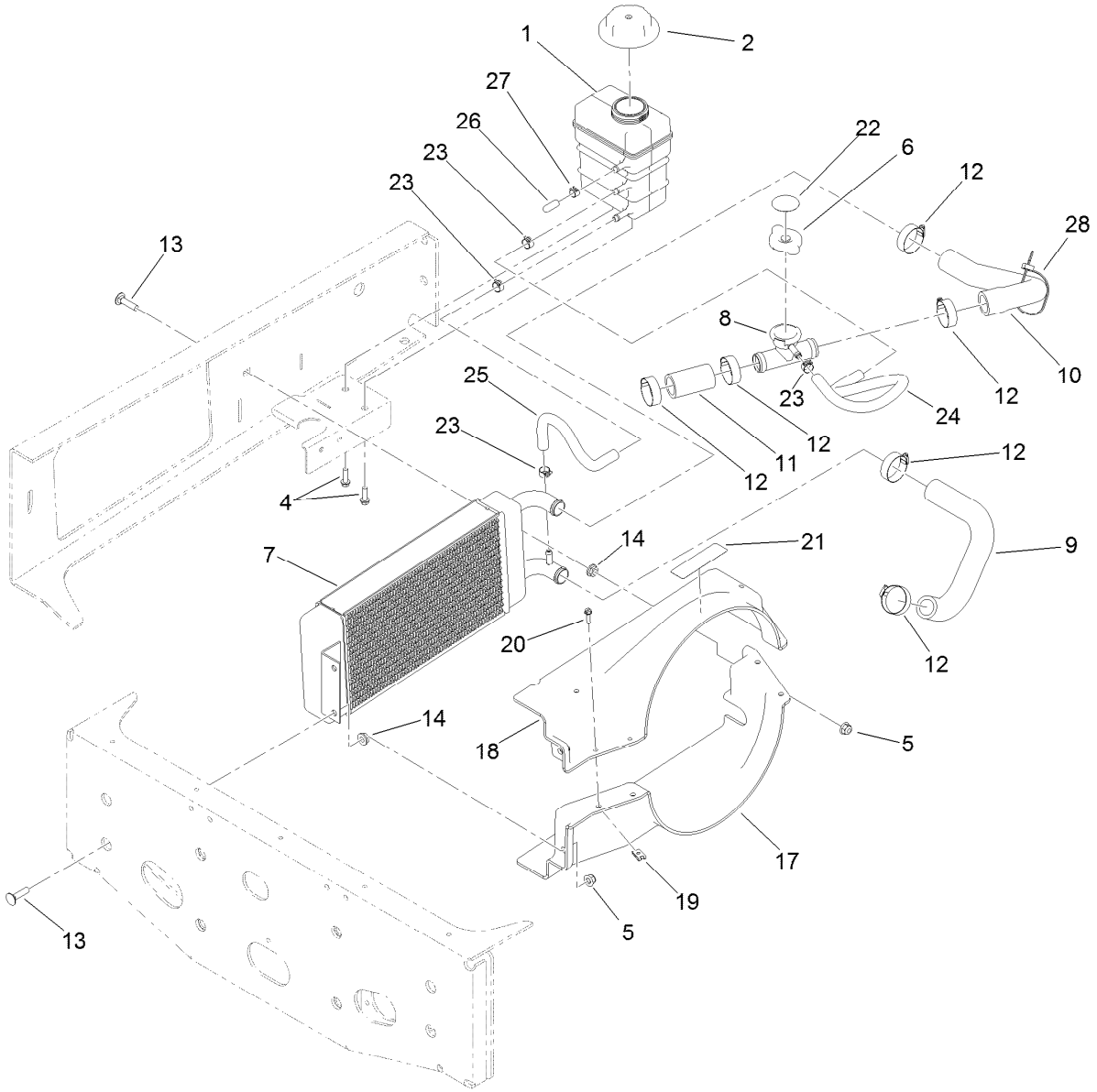

Radiator Assembly

Ref.	Part Number	Qty.	Description
1	120-4856	1	Tank-Surge
2	120-4867	1	Cap-Coolant, Threaded (15 PSI)
4	46-8091	2	Screw-HWH
5	104-8300	3	Nut-HF, NI
6	120-4866	1	Cap-System, Cooling
7	119-0915	1	Radiator
8	119-9700	1	Filler Neck ASM
9	119-9708	1	Hose-Radiator, Lower
10	119-9709	1	Hose-Radiator, Upper
11	119-9711	1	Hose-Straight
12	2412-34	6	Clamp-Hose
13	3230-3	3	Screw-CARR

Ref.	Part Number	Qty.	Description
14	32128-20	3	Nut-HF
17	120-4828	1	Shroud-Radiator, Lower
18	120-4827	1	Shroud-Radiator, Upper
19	3290-277	4	Nut-Speed
20	32105-13	4	Screw-HWH
21	120-0627	1	Decal-Warning
22	106-6755	1	Decal-Cap, Radiator
23	92-2379	4	Clamp-Hose
24	136-1192	1	Hose-Coolant
25	120-4869	1	Hose-Coolant
26	115-2403	1	Cap
27	2412-146	1	Clamp-Hose
28	3290-378	1	Tie-Cable

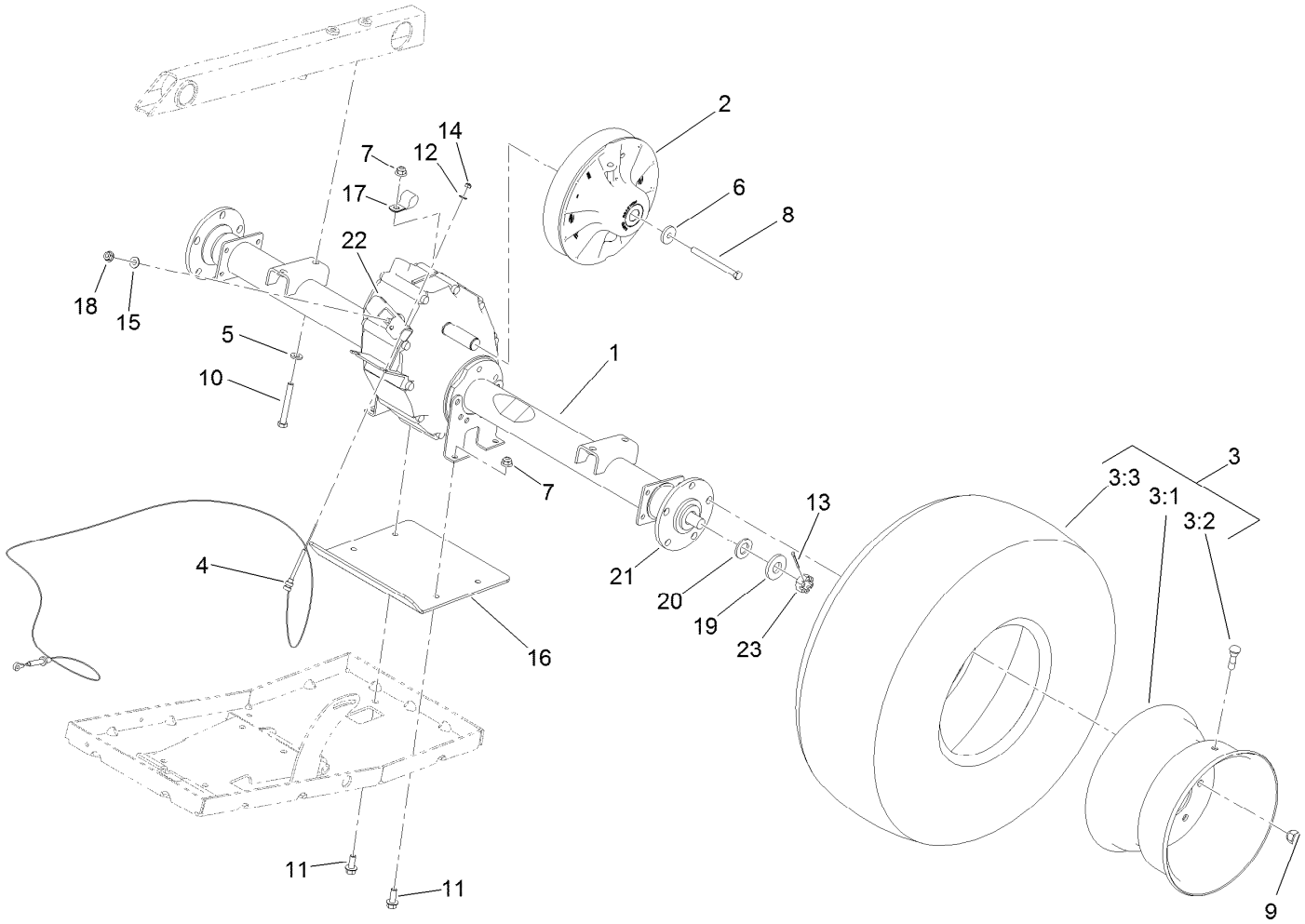

Rear Axle Drive System Assembly

Ref.	Part Number	Qty.	Description
1	119-0760	1	Transaxle ASM
2	119-6011	1	Secondary Clutch ASM
3	131-8434	2	Tire And Wheel ASM
3:1	131-8435	1	Wheel
3:2	232-27	1	Stem-Valve
3:3	131-6667	1	Tire
4	104-6896	2	Cable-Shift
5	100-4852	4	Washer-Hardened
6	104-6563	1	Washer-Stepped
7	104-8301	4	Nut-HF, NI
8	119-0723	1	Screw-HH, Lock
9	242-50	10	Nut-Lug
10	323-14	4	Screw-HH

Ref.	Part Number	Qty.	Description
11	3234-11	4	Screw-HHF
12	3256-49	2	Washer-Plain
13	3272-12	2	Pin-Cotter
14	3296-2	2	Nut-Lock, NI
15	87-8640	1	Washer-Flat
16	119-9741-03	1	Plate-Skid, Axle
17	2412-4	1	Clamp-R
18	104-1672	1	Nut-Lock
19	133-0632	2	Spacer
20	104-1674	2	Washer
21	104-1675	2	Hub
22	104-6860	1	Lever-Select
23	104-1656	2	Nut-Castle

Transaxle Assembly No. 119-0760

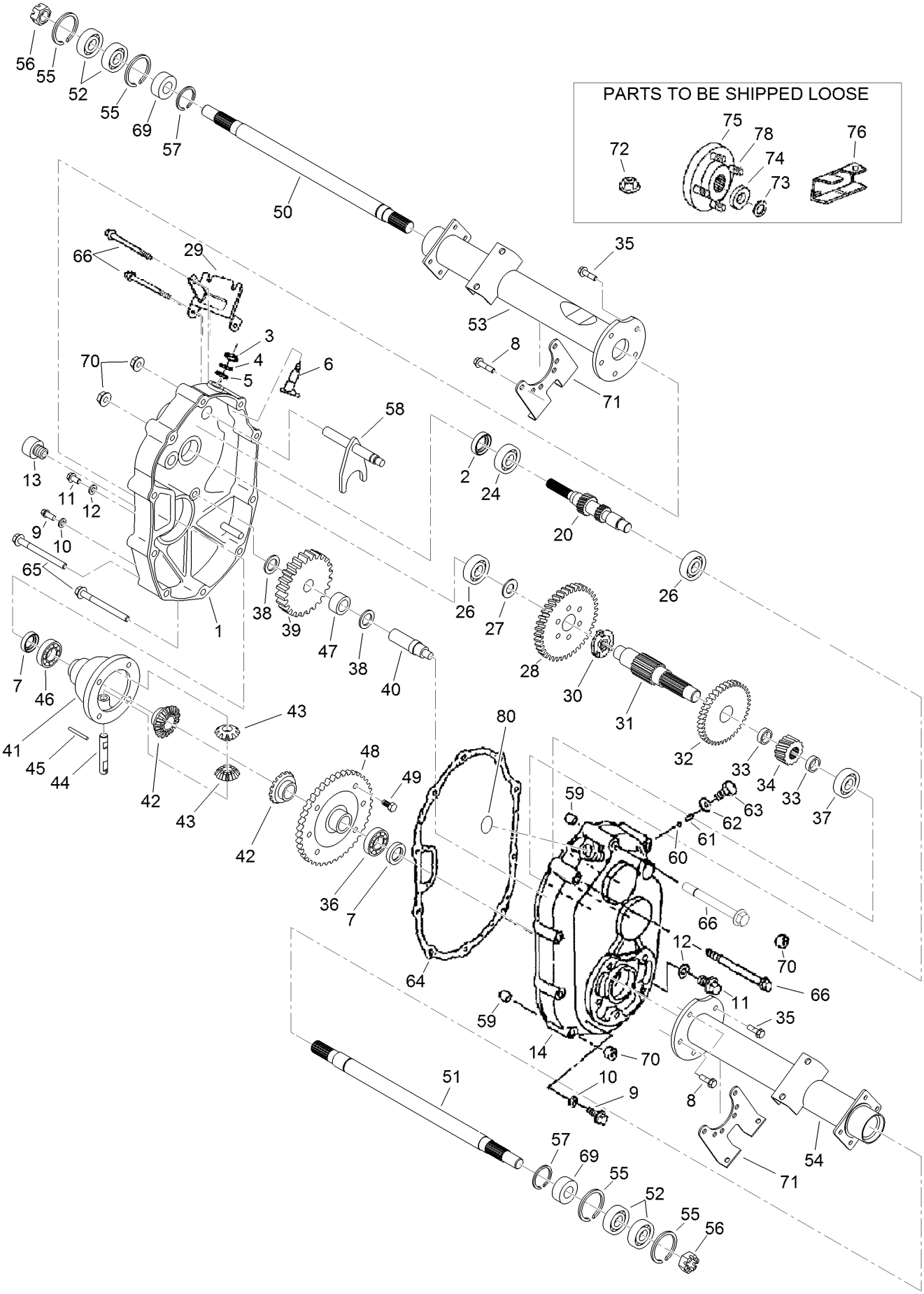

Transaxle Assembly No. 119-0760 (continued)

Ref.	Part Number	Qty.	Description
1	104-1601	1	Case-LH, Complete
2	104-1602	1	Seal-Oil
3	104-1603	1	Seal-Oil
4	104-1604	1	Ring-Snap
5	104-1605	1	Spacer
6	104-1606	1	Shaft-Selector
7	104-1607	2	Seal-Oil
8	104-1608	4	Bolt-Flange
9	104-1609	2	Plug-Check, Oil
10	104-1610	2	Gasket
11	104-1611	2	Plug-Drain, Oil
12	104-1612	2	Gasket
13	104-1613	1	Plug-Filler, Oil
14	104-1614	1	Case-Complete, RH
20	104-7002	1	Shaft-Input, Complete
24	104-1624	1	Bearing-Ball
26	104-1626	2	Bearing-Ball
27	104-1627	1	Spacer
28	104-1628	1	Gear
29	104-1629	1	Bracket-Wire, Change
30	104-1630	1	Clutch-Pin
31	104-1631	1	Shaft-Center
32	104-1632	1	Gear
33	104-1633	2	Collar
34	104-1634	1	Gear
35	104-1635	6	Bolt-Flange
36	104-1636	1	Bearing-Ball
37	104-1637	1	Bearing-Ball
38	104-1638	2	Spacer
39	104-1639	1	Gear
40	104-1640	1	Shaft-Counter
41	104-1641	1	Case-Differential
42	104-1642	2	Gear-Side, Differential
43	104-1643	2	Pinion-Differential
44	104-1644	1	Shaft-Differential
45	104-1645	1	Pin
46	104-1646	1	Bearing-Ball
47	104-1647	1	Bearing-Needle
48	104-1648	1	Gear
49	104-1649	6	Bolt
50	104-1650	1	Shaft-Axle, LH
51	104-1651	1	Shaft-Axle, RH
52	104-1652	4	Bearing-Ball
53	104-1653	1	Case-Axle, LH
54	104-1654	1	Case-Axle, RH
55	104-1655	4	Ring-Snap
56	104-1656	2	Nut-Castle
57	104-1657	2	Ring-Snap
58	104-6870	1	Shaft-Shift, Complete
59	104-1659	2	Knock-Pipe
60	104-1660	1	Ball-Steel
61	104-1661	1	Spring
62	104-1662	1	Gasket
63	104-1663	1	Bolt
64	104-1664	1	Gasket
65	104-1665	6	Bolt-Flange
66	104-1666	4	Bolt-Flange
69	104-6867	2	Collar
70	33004-00	10	Nut-HF
71	104-1671	2	Bracket-Axle
72	104-1672	1	Nut-Lock
73	104-1673	2	Washer-Spring
74	104-1674	2	Washer
75	104-1675	2	Hub
76	104-6860	1	Lever-Select
78	104-8649	10	Stud
80	121-9718	1	Cap-Seal

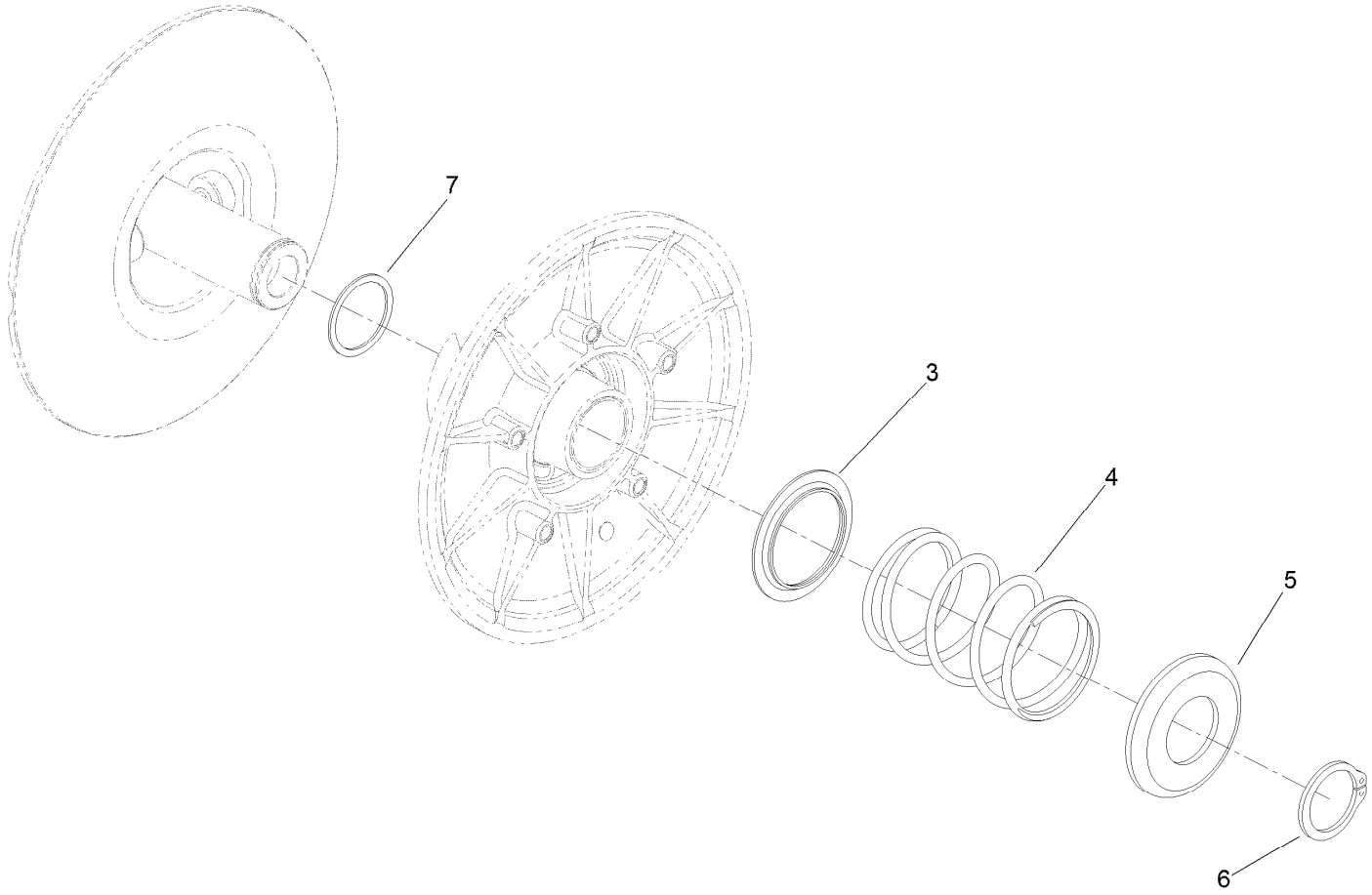

Secondary Clutch Assembly No. 119-6011

Ref.	*Part Number*	*Qty.*	*Description*
3	119-0809	1	Cup-Spring Retainer, Inner
4	119-9360	1	Spring-Compression, Black/Almond
5	119-0810	1	Cup-Spring Retainer, Outer
6	119-0811	1	Ring-Retaining
7	119-6018	1	Shim-Thrust

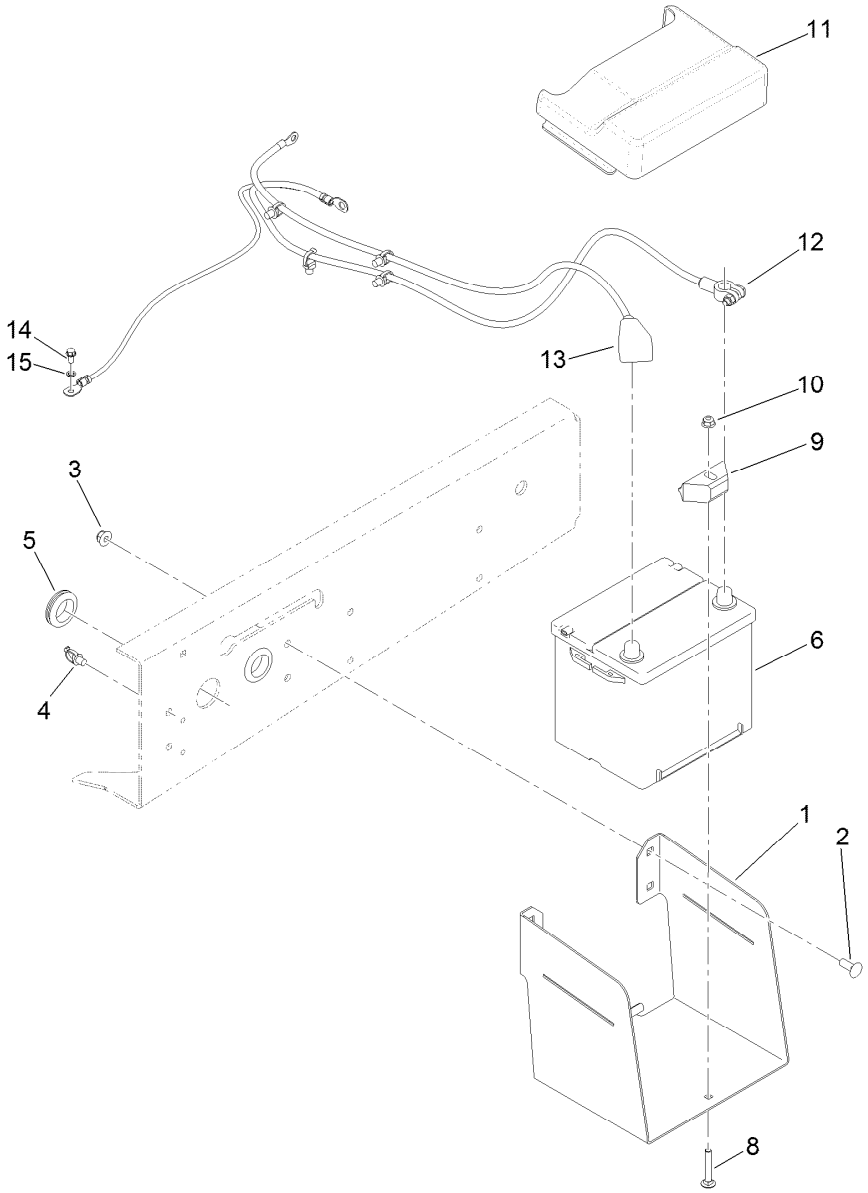

Battery Assembly

Ref.	Part Number	Qty.	Description
1	119-9495-03	1	Tray-Battery
2	3231-22	4	Screw-CARR
3	104-8301	4	Nut-HF, NI
4	32180-030	6	Clip-Tie
5	120-4831	2	Grommet
6	106-5187	1	Battery-Dry
8	3230-6	1	Bolt-CARR,Full Thrd
9	66-2490	1	Retainer-Battery
10	104-8300	1	Nut-HF, NI
11	119-9496	1	Cover-Battery
12	120-4849	1	Cable-Battery, Negative
13	120-4850	1	Cable-Battery, Positive
14	32144-4	1	Screw-HWH
15	3254-16	1	Washer-Lock/Int

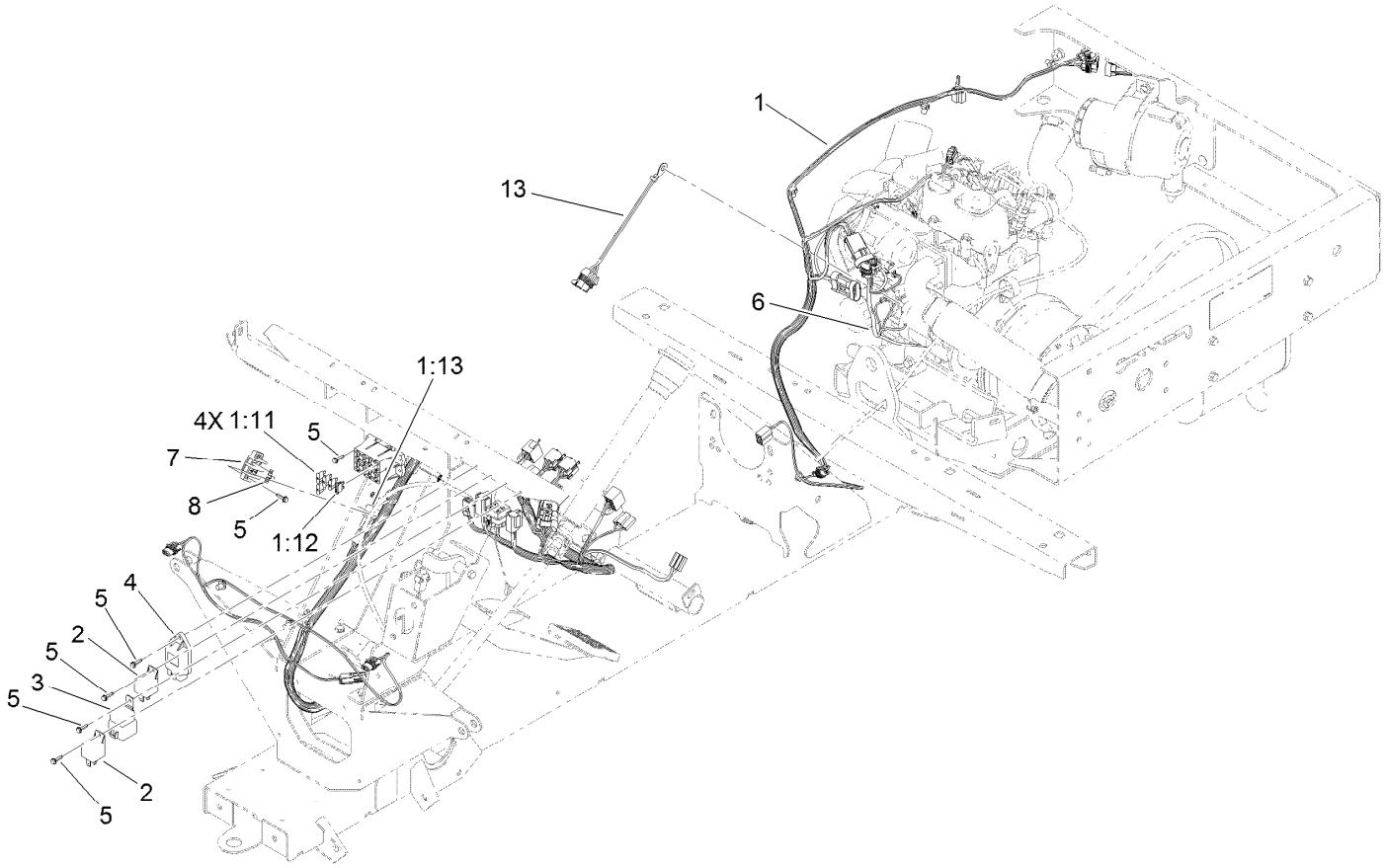

Electrical Assembly

Ref.	Part Number	Qty.	Description
1	122-0734	1	Harness-Wire, Main
1:11	218-578	4	Fuse-Blade, 10 Amp
1:12	109355	1	Fuse-Blade, 15 Amp
1:13	104-4022	1	Resistor-75 Ohm
1:24	109103	1	Fuse-Blade, 30 Amp ●
2	99-7435	2	Relay
3	99-7430	1	Relay-Mini 280
4	98-7611	1	Controller-Glow
5	100-4351	8	Screw-HWH
6	120-3961	1	Harness-Wire, Engine
7	42862	1	Block-Terminal, Ground
8	42863	1	Strip-Jumper
13	99-3441	1	Harness-Wire, Fusible Link

● Not illustrated

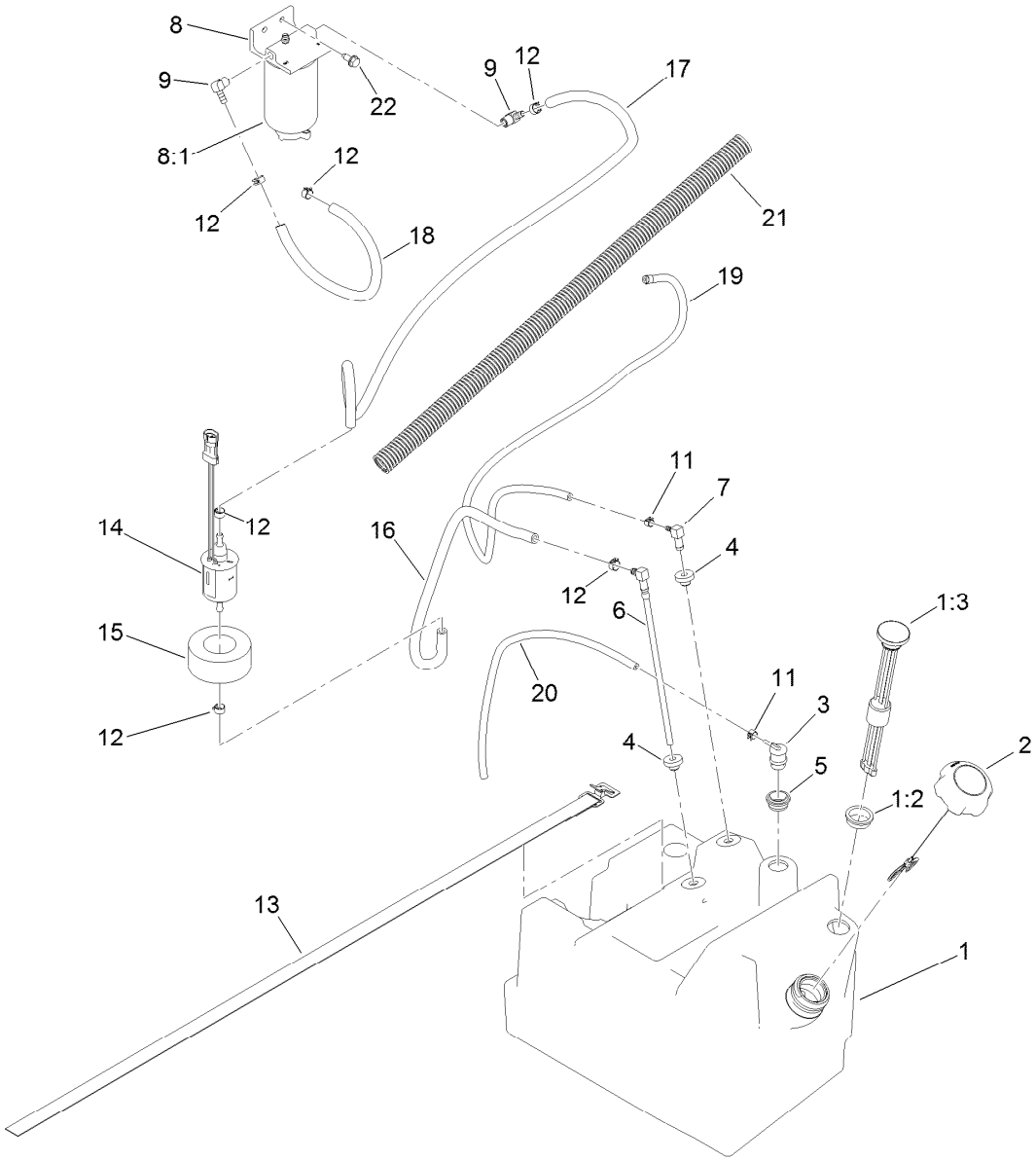

Fuel Tank Assembly

Ref.	Part Number	Qty.	Description
1	119-9723	1	Fuel Tank ASM
1:2	95-8972	1	Grommet
1:3	99-7262	1	Gauge-Fuel
2	115-7789	1	Cap-Fuel, Diesel
3	114-0285	1	Valve-Rollover
4	46-6560	2	Bushing
5	114-0284	1	Grommet
6	110-9689	1	Pipe-Stand
7	104-5228	1	Fitting-Elbow, 90 DEG
8	110-9044	1	Separator-Filter
8:1	110-9049	1	Filter-Spin On
9	353-781	2	Fitting-HYD, 90

Ref.	Part Number	Qty.	Description
11	2412-146	3	Clamp-Hose
12	92-2379	6	Clamp-Hose
13	3339-175	1	Strapping-Web
14	110-8806	1	Pump-Fuel
15	119-9749	1	Holder-Pump, Fuel
16	108-3284	1	Hose-Fuel
17	110-3259	1	Hose-Fuel
18	114-4028	1	Hose-Fuel
19	117-6395	1	Hose-Vent, Tank
20	110-8255	1	Hose-Fuel
21	120-4829	1	Conduit-Corregated
22	32144-70	2	Screw-HWHTF

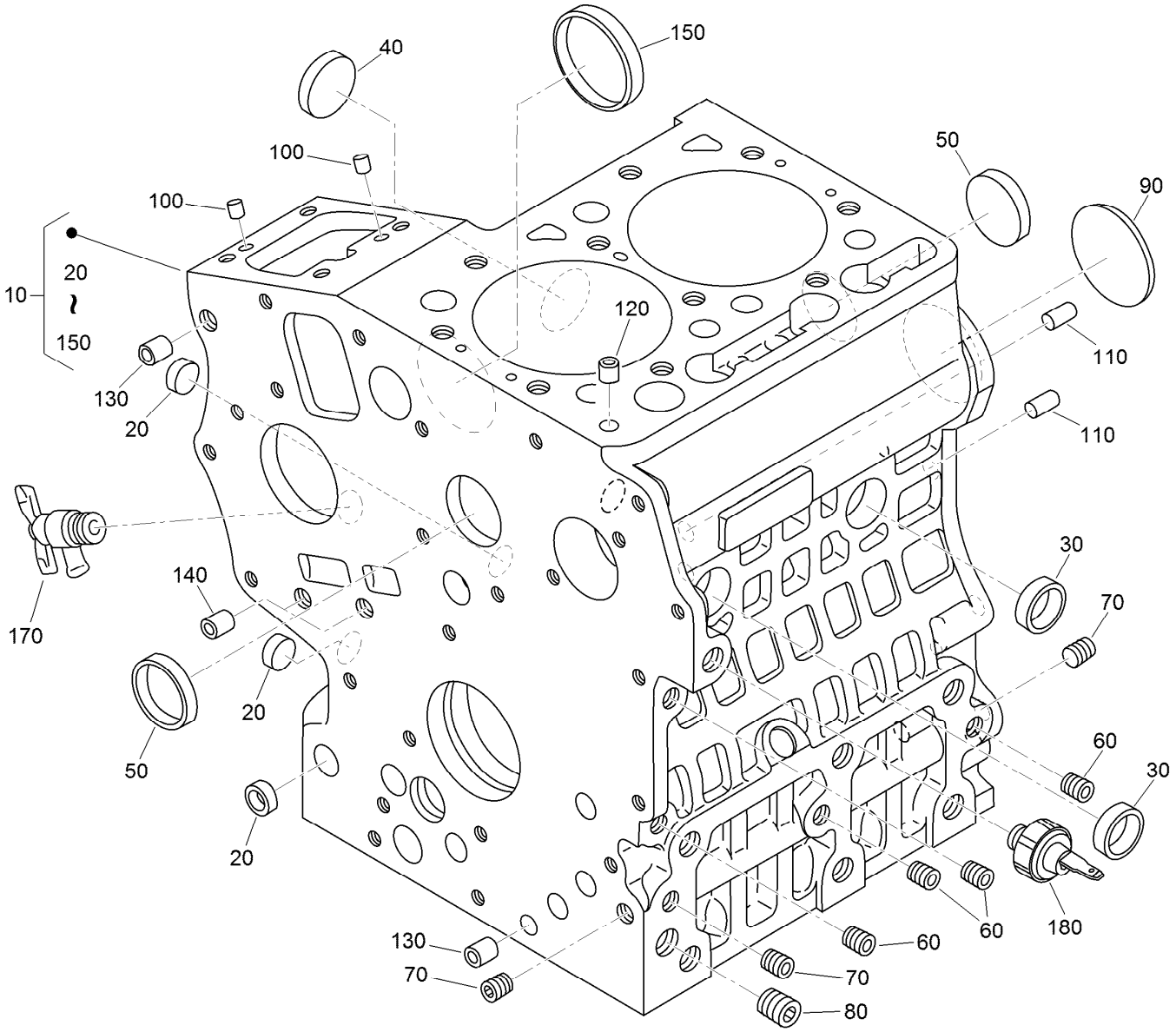

Crankcase Assembly

Ref.	Part Number	Qty.	Description
10	130-1485	1	Crankcase ASM
20	100-2019	3	Cap-Sealing
30	100-2020	2	Cap-Sealing
40	110-3702	1	Cap-Sealing
50	98-9398	2	Cap-Sealing
60	98-9687	4	Plug
70	98-7487	3	Plug
80	98-7488	1	Plug
90	100-1851	1	Plug-Expansion

Ref.	Part Number	Qty.	Description
100	98-9375	2	Pin-Straight
110	98-9377	2	Pin-Straight
120	98-7506	1	Pin-Pipe
130	100-2051	2	Pin-Pipe
140	100-2051	2	Pin-Pipe
150	100-1991	1	Cover-Fuel, Camshaft
170	120-3121	1	Draincock ASM
180	98-9416	1	Switch-Oil

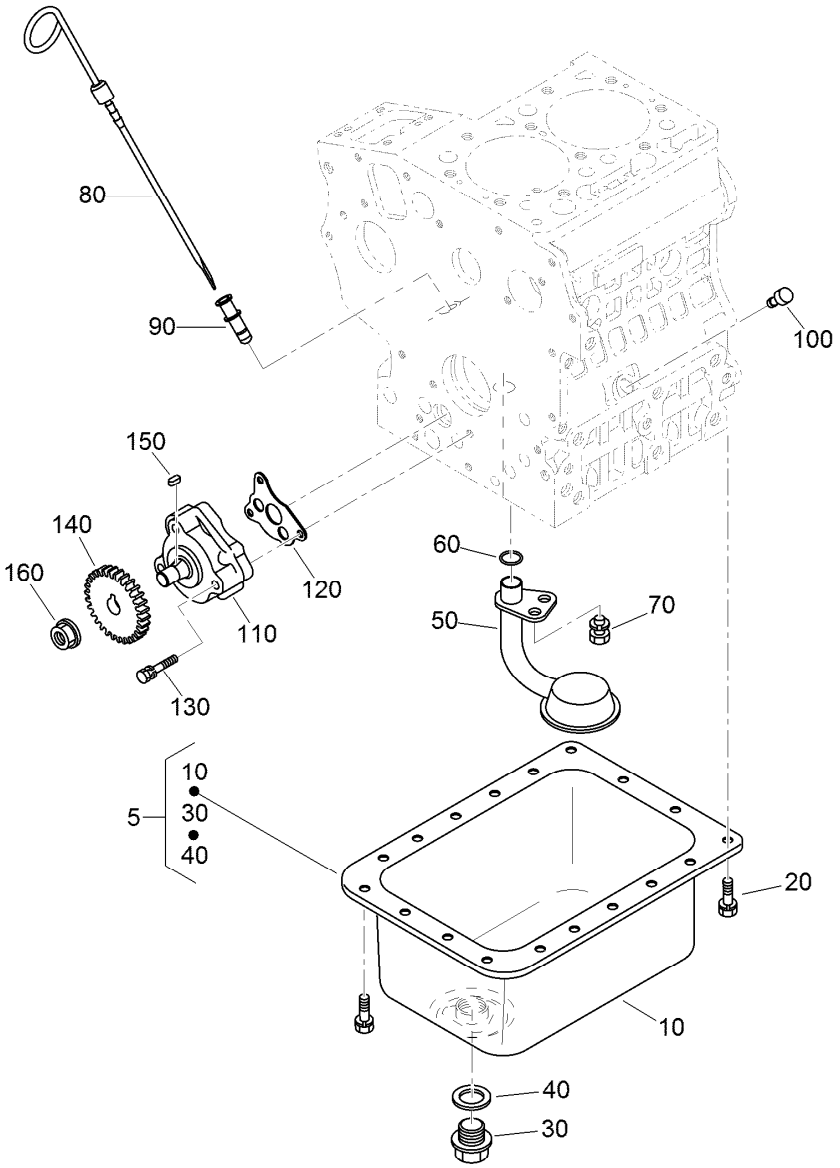

Oil Pan, Oil Pump and Dipstick Assembly

Ref.	Part Number	Qty.	Description
5	121-3843	1	Oil Pan Kit
10	121-3842	1	Oil Pan ASM
20	98-9350	18	Bolt
30	98-9686	1	Plug-Drain
40	110-9715	1	Gasket-Pan, Oil
50	100-2001	1	Strainer-Pickup, Oil
60	105-3776	1	O-Ring
70	100-9195	1	Bolt
80	110-3719	1	Gauge-Oil

Ref.	Part Number	Qty.	Description
90	105-4580	1	Guide-Gauge, Oil
100	110-3720	1	Plug-Gauge, Oil
110	100-2002	1	Oil Pump ASM
120	100-2003	1	Gasket-Pump, Oil
130	100-1923	3	Bolt
140	130-1419	1	Gear-Drive, Oil Pump
150	98-7658	1	Key-Feather
160	100-1779	1	Nut-Flange

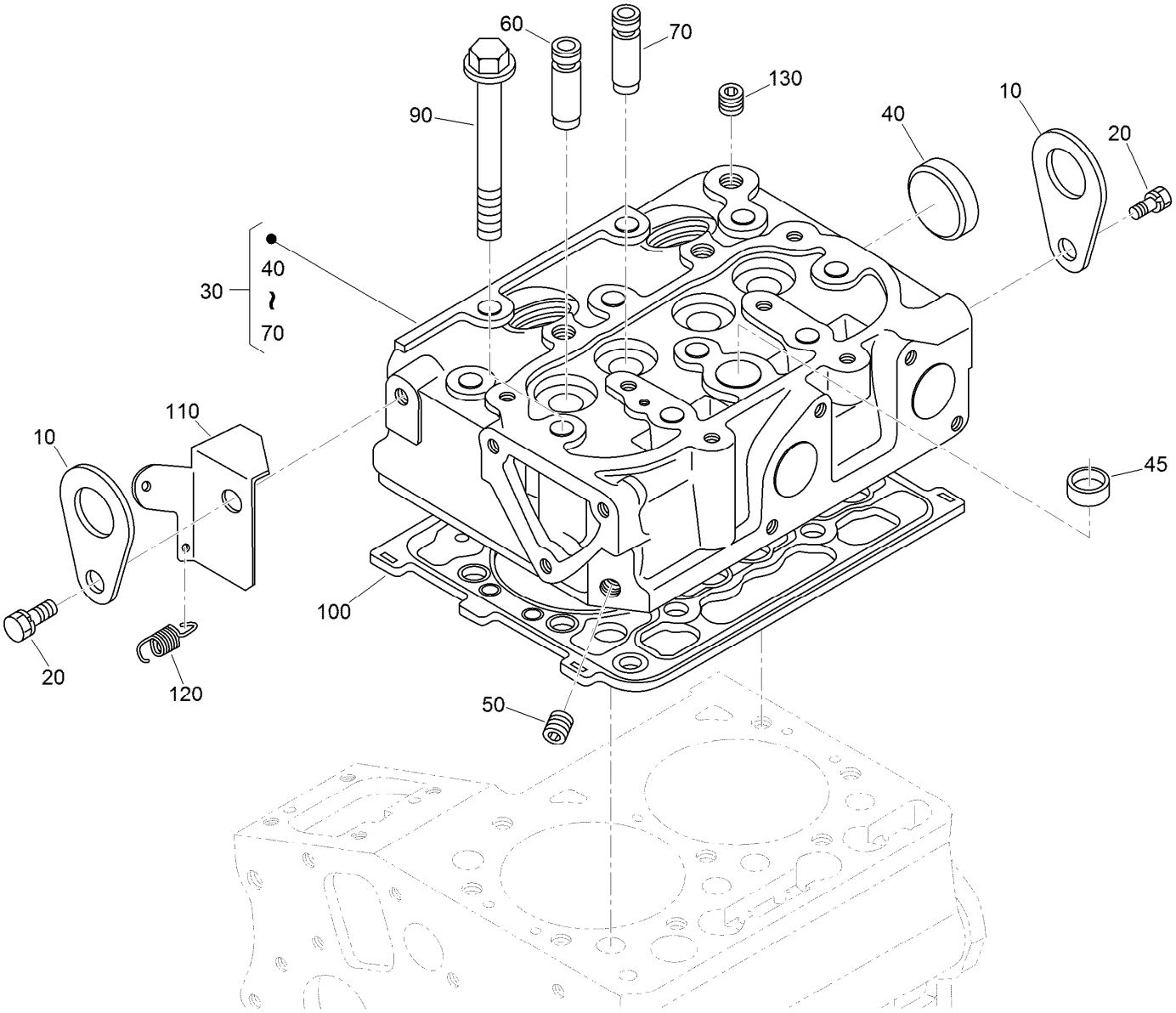

Cylinder Head Assembly

Ref.	Part Number	Qty.	Description
10	98-7531	2	Hook-Engine
20	98-7526	2	Bolt
30	121-3823	1	Cylinder Head ASM
40	105-3705	1	Cap-Sealing
45	98-9389	1	Cap-Sealing
50	98-9687	1	Plug
60	100-1882	2	Guide-Valve, Inlet
70	100-1883	2	Guide-Valve, Exhaust
90	100-1820	10	Bolt-Head, Cylinder
100	121-3824	1	Gasket-Head, Cylinder
110	121-3810	1	Stay
120	121-3820	1	Spring-Return
130	98-9444	1	Plug

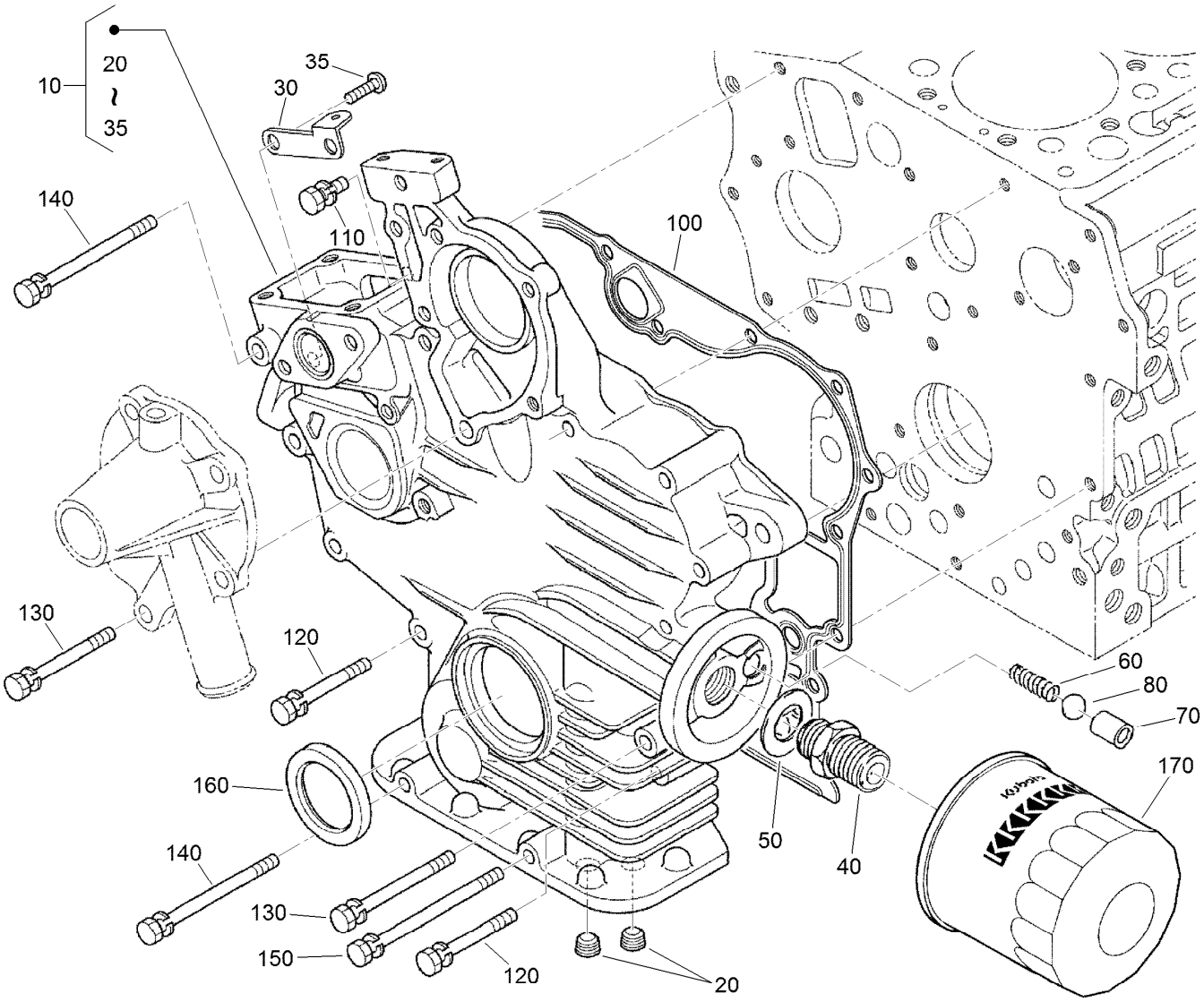

Gear Case and Oil Filter Cartridge Assembly

Ref.	Part Number	Qty.	Description
10	110-3707	1	Case-Gear
20	98-7488	2	Plug
30	110-3708	1	Stay-Spring, Start
35	100-2040	2	Screw
40	98-9388	1	Joint-Pipe
50	100-1926	1	Washer-Plain
60	100-2004	1	Spring
70	100-1894	1	Seat-Valve
80	100-1792	1	Ball

Ref.	Part Number	Qty.	Description
100	117-0327	1	Gasket-Case, Gear
110	127-0403	1	Bolt-Flange
120	125-9063	9	Bolt-Sems
130	100-1922	2	Bolt
140	98-9357	2	Bolt
150	110-3710	1	Bolt
160	120-7852	1	Seal-Oil
170	115-8189	1	Filter-Oil, Engine

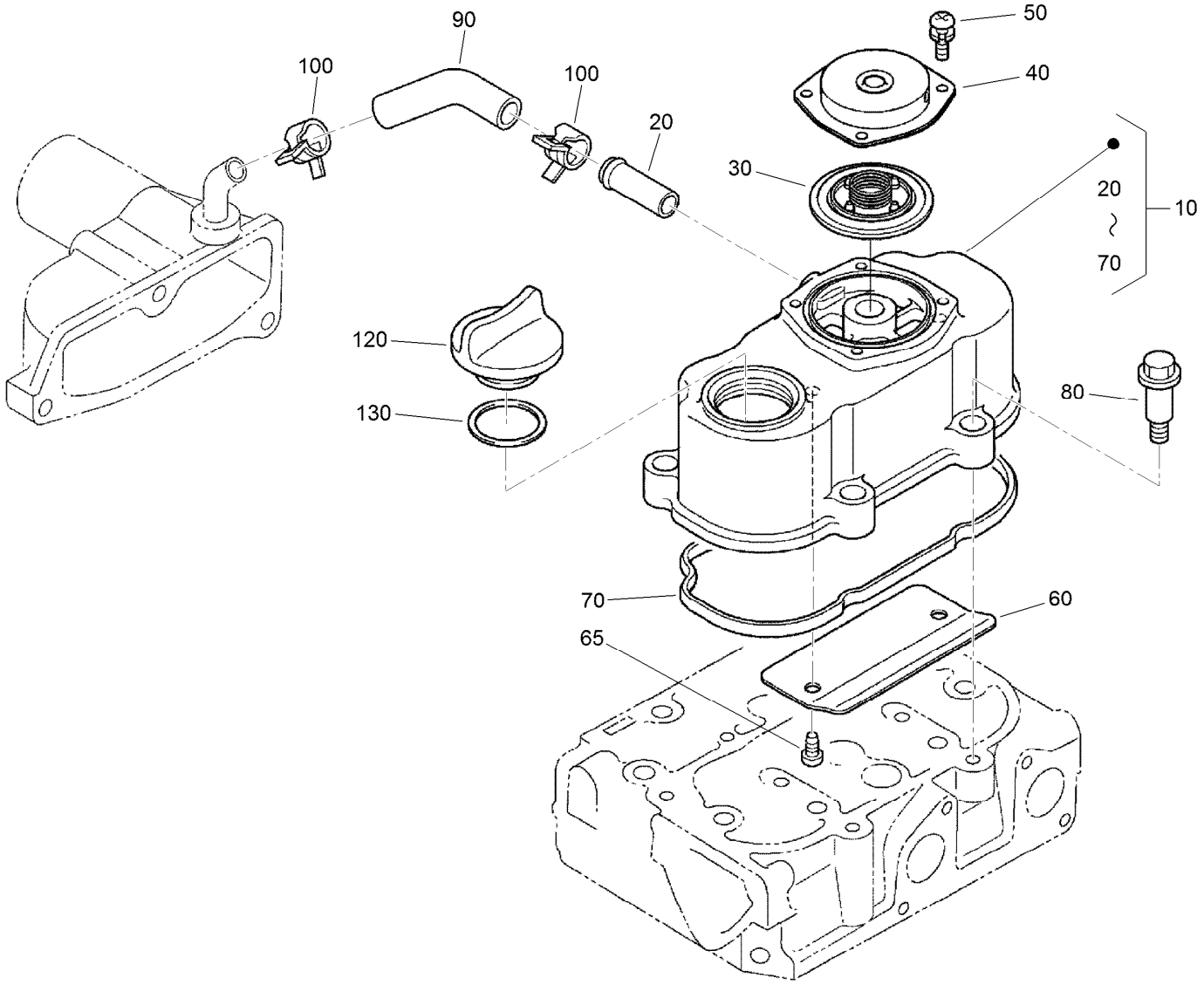

Cylinder Head Cover Assembly

Ref.	*Part Number*	*Qty.*	*Description*
10	121-3841	1	Cylinder Head Cover ASM
20	98-9580	1	Pipe-Return, Water
30	110-3715	1	Valve-Breather
40	110-3714	1	Cover-Breather
50	98-9364	4	Screw (With Washer)
60	110-3716	1	Shield-Breather
65	100-2040	2	Screw
70	121-3828	1	Gasket-Cover, Head
80	108-7063	4	Bolt
90	120-3139	1	Tube-Breather
100	110-3712	2	Clamp-Hose
120	107-9075	1	Plug-Filler, Oil
130	99-3446	1	O-Ring

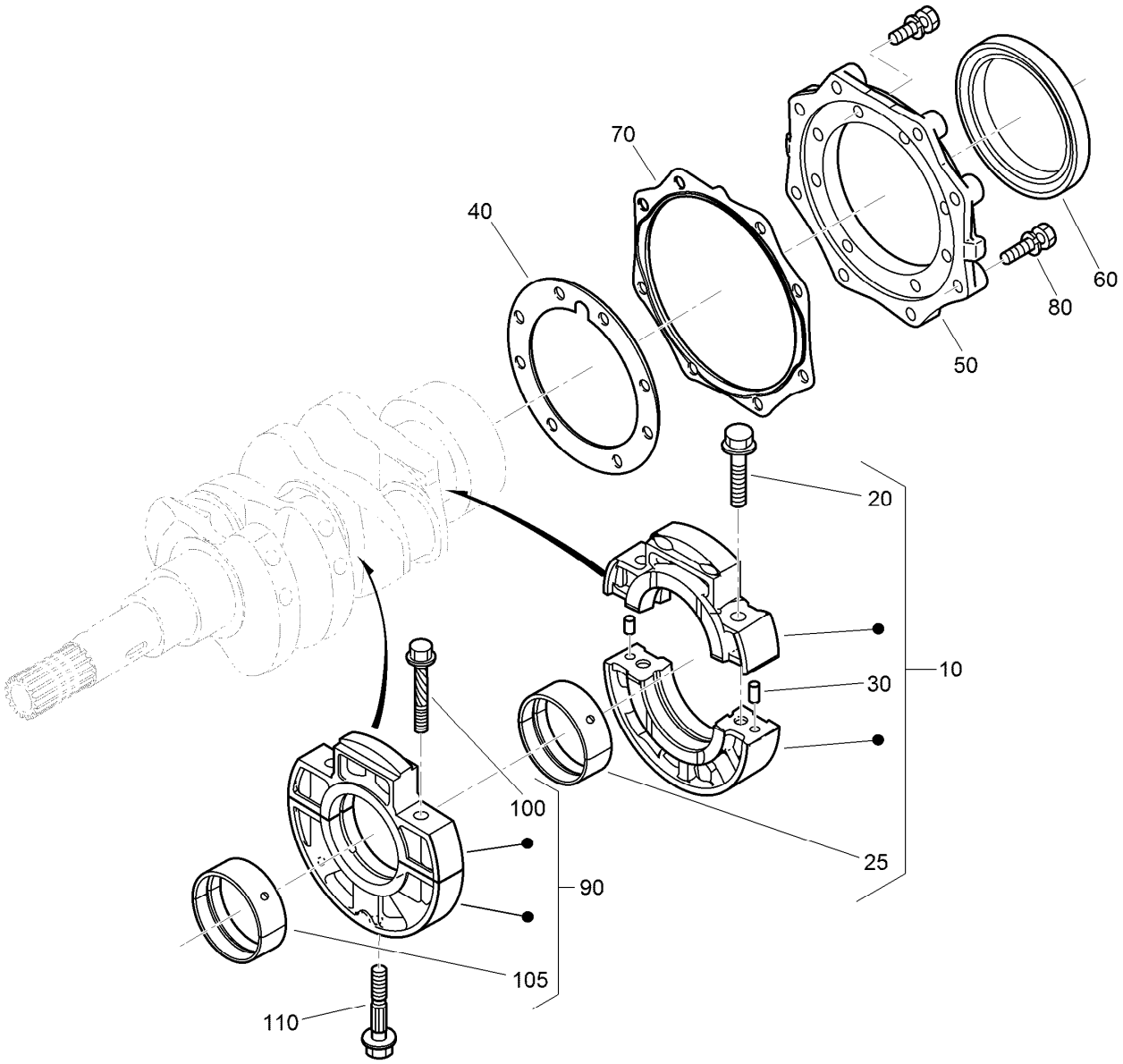

Main Bearing Case Assembly

Ref.	Part Number	Qty.	Description
10	125-9064	1	Wheel Bearing Case ASM
20	125-9065	2	Bolt-Flange
25	125-9066	1	Crankshaft Metal ASM (STD)
25	125-9067	1	Crankshaft Metal ASM (-0.20Mm)
25	125-9068	1	Crankshaft Metal ASM (-0.40Mm)
30	125-9082	2	Pin-Straight
40	100-1873	1	Gasket-Case, Bearing
50	112-8334	1	Cover-Case, Bearing
60	110-3724	1	Seal-Oil

Ref.	Part Number	Qty.	Description
70	100-1876	1	Gasket-Cover, Case
80	100-1750	16	Bolt
90	110-3725	1	Main Bearing Case ASM
100	110-3723	2	Bolt-Case, Bearing
105	110-3741	1	Crankshaft Metal ASM (STD)
105	125-9083	1	Crankshaft Metal ASM (-0.20Mm)
105	110-3743	1	Crankshaft Metal ASM (-0.40Mm)
110	100-1874	1	Bolt-Case, Bearing

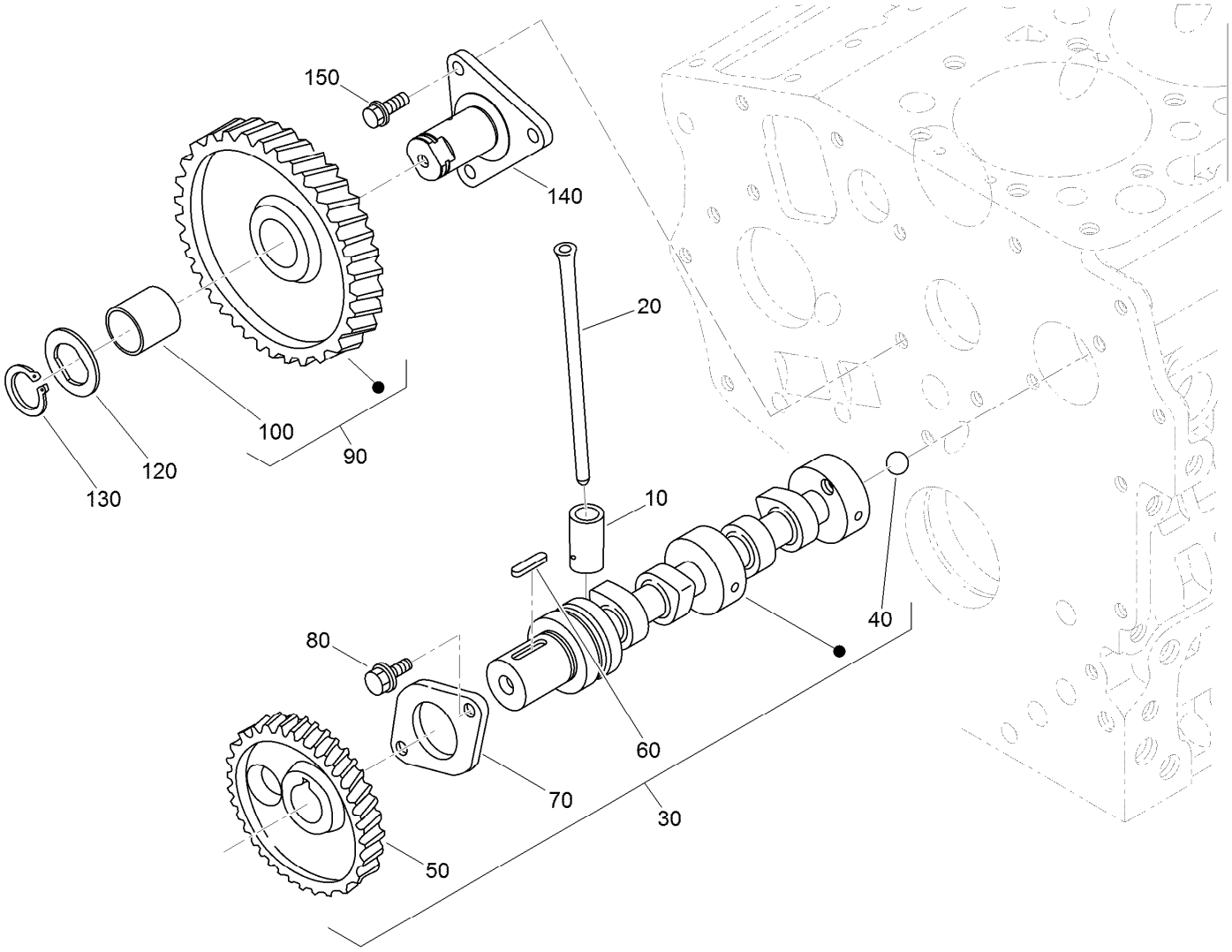

Camshaft and Idle Gear Shaft Assembly

Ref.	*Part Number*	*Qty.*	*Description*
10	110-3727	4	Tappet
20	100-1989	4	Rod-Push
30	121-3845	1	Camshaft ASM
40	110-3729	1	Ball
50	130-1534	1	Gear-Cam
60	98-9378	1	Key-Feather
70	100-1887	1	Stopper-Camshaft
80	98-9350	2	Bolt
90	121-2421	1	Idle Gear ASM
100	121-2422	1	Bushing
120	100-1970	1	Collar-Gear, Idle
130	100-1969	1	Ring-Snap
140	100-1967	1	Shaft-Gear, Idle
150	100-1774	3	Bolt-Flange

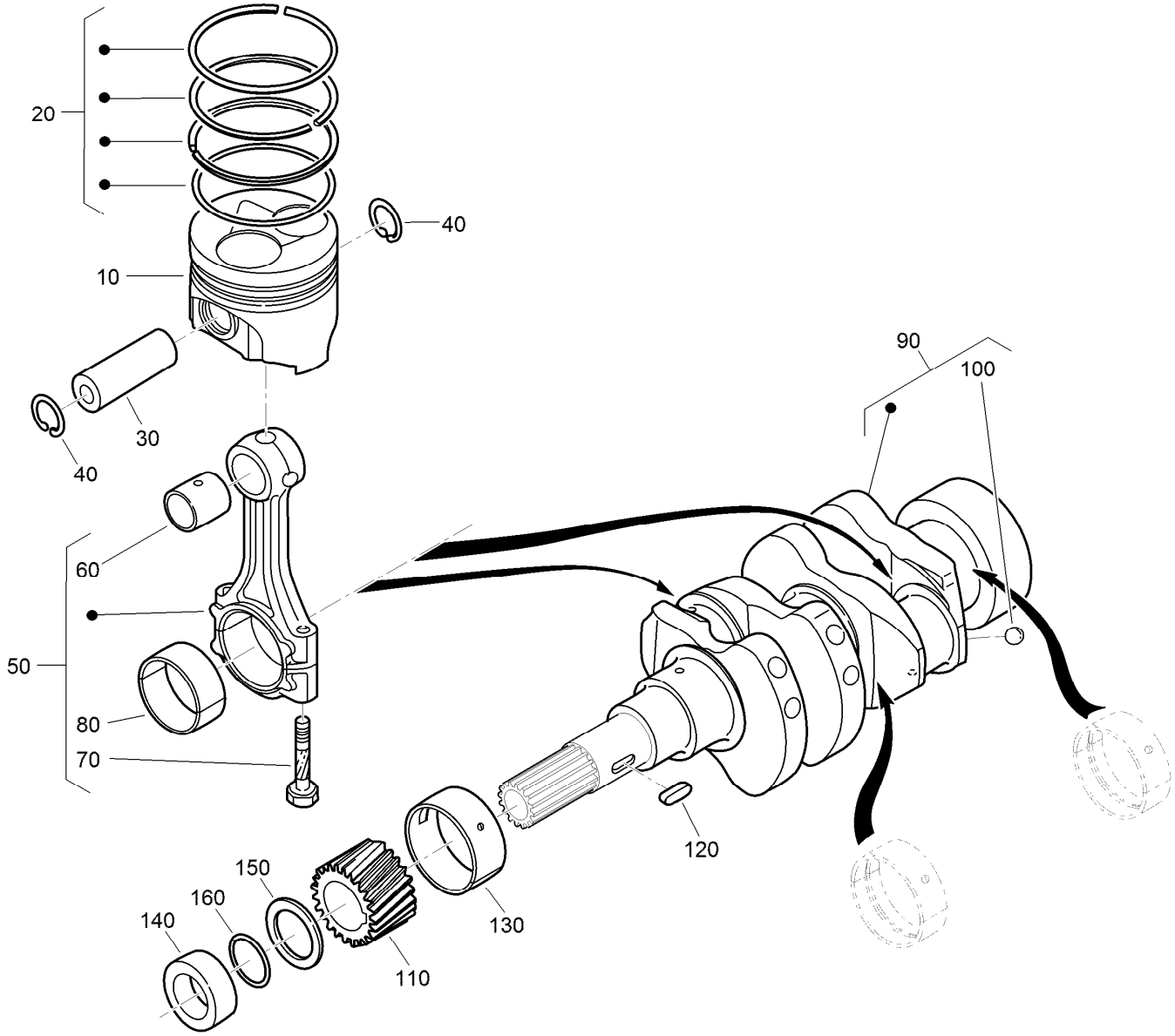

Piston and Crankshaft Assembly

Ref.	Part Number	Qty.	Description
10	130-1518	2	Piston
10	130-1520	2	Piston
20	130-1516	2	Piston Ring ASM
20	130-1517	2	Piston Ring ASM
30	110-3734	2	Pin-Piston
40	100-1835	4	Circlip-Internal
50	125-9070	2	Connecting Rod ASM
60	110-3736	2	Bushing-Pin, Piston
70	100-1999	4	Bolt-Rod, Connecting
80	100-2000	2	Metal-Crankpin (STD)
80	121-3849	2	Metal-Crankpin (-.20Mm)

Ref.	Part Number	Qty.	Description
80	121-2420	2	Metal-Crankpin (-.40Mm)
90	121-3829	1	Crankshaft ASM
100	100-1791	2	Ball
110	100-1891	1	Gear-Crankshaft
120	100-1752	1	Key-Feather
130	110-3738	1	Metal-Crankshaft (STD)
130	121-2424	1	Metal-Crankshaft (-.20Mm)
130	121-2425	1	Metal-Crankshaft (-.40Mm)
140	100-1890	1	Collar-Crankshaft
150	100-1974	1	Slinger-Oil
160	100-2209	1	O-Ring

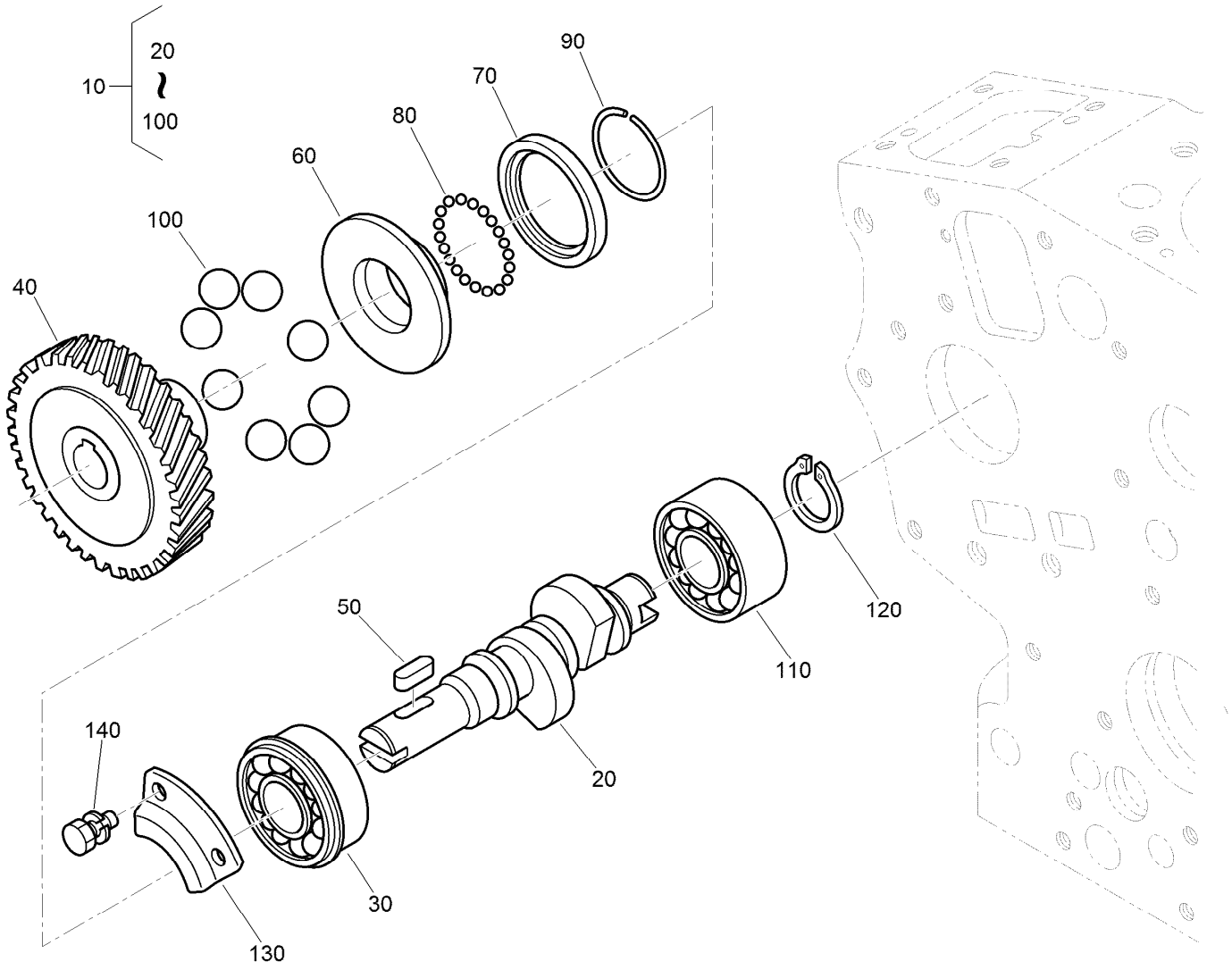

Fuel Camshaft Assembly

Ref.	Part Number	Qty.	Description
10	130-1515	1	Fuel Camshaft ASM
20	121-3802	1	Camshaft-Fuel
30	100-1795	1	Bearing-Ball
40	130-1521	1	Pump-Gear, Injection
50	100-1752	1	Key-Feather
60	112-8336	1	Sleeve-Governor
70	100-1904	1	Case-Ball, Governor
80	100-1790	32	Ball
90	100-1843	1	Circ-Clip
100	100-1793	8	Ball
110	110-3757	1	Bearing-Ball
120	100-1784	1	Circ-Clip, External
130	100-1888	1	Stopper-Fuel, Camshaft
140	98-9350	2	Bolt

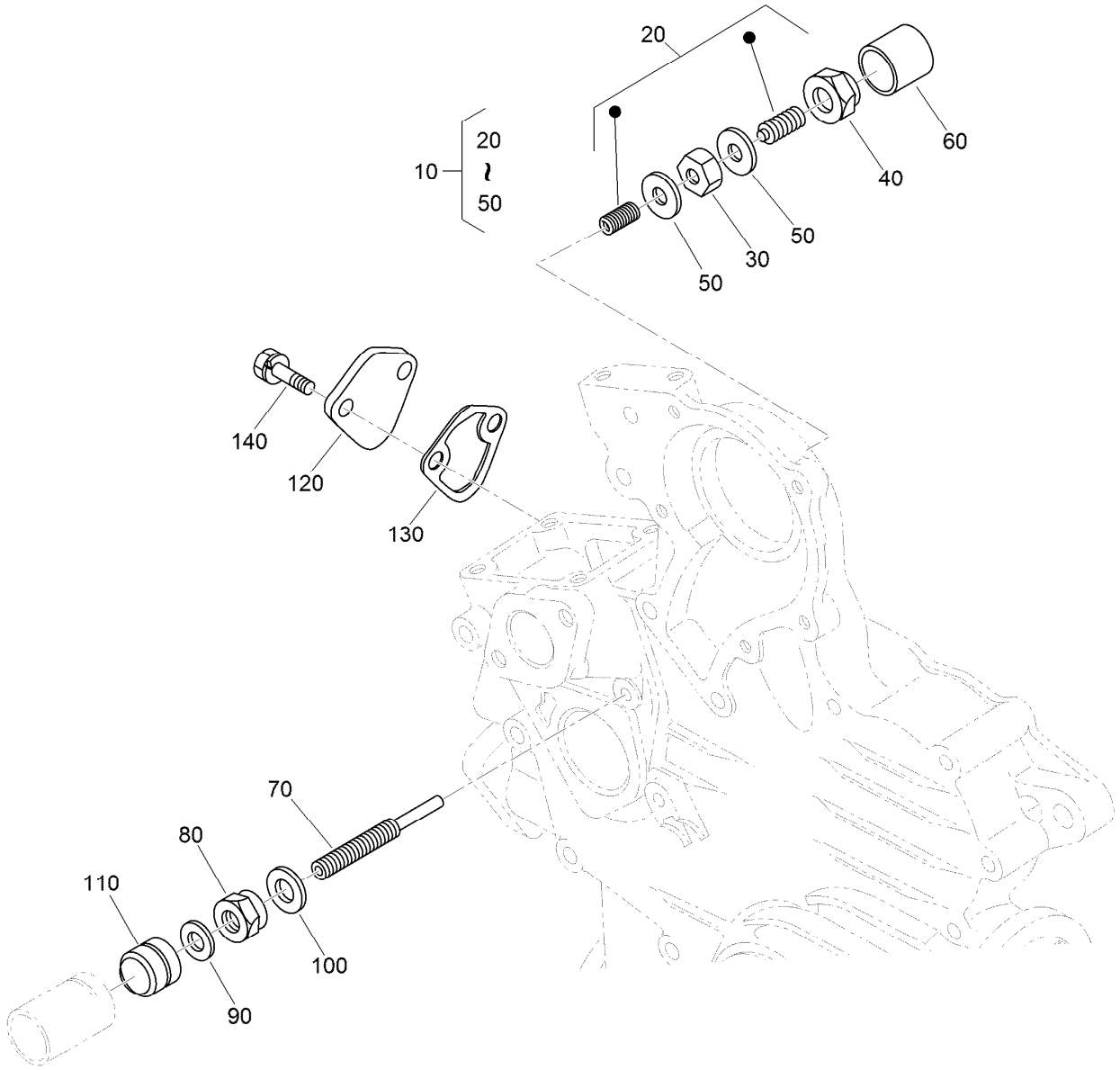

Idle Apparatus and Fuel Pump Cover Assembly

Ref.	*Part Number*	*Qty.*	*Description*
10	100-1898	1	Idle Apparatus ASM
20	100-1899	1	Adjusting Bolt ASM
30	100-1846	1	Nut
40	100-1901	1	Nut-Cap
50	98-7428	2	Gasket
60	100-1902	1	Cap
70	110-3758	1	Bolt-Adjusting
80	100-2175	1	Nut-Lock
90	98-7654	1	Gasket
100	107-9081	1	Gasket
110	99-8387	1	Nut-Cap
120	99-3514	1	Cover
130	98-9636	1	Gasket-Pump, Fuel
140	98-7692	2	Bolt

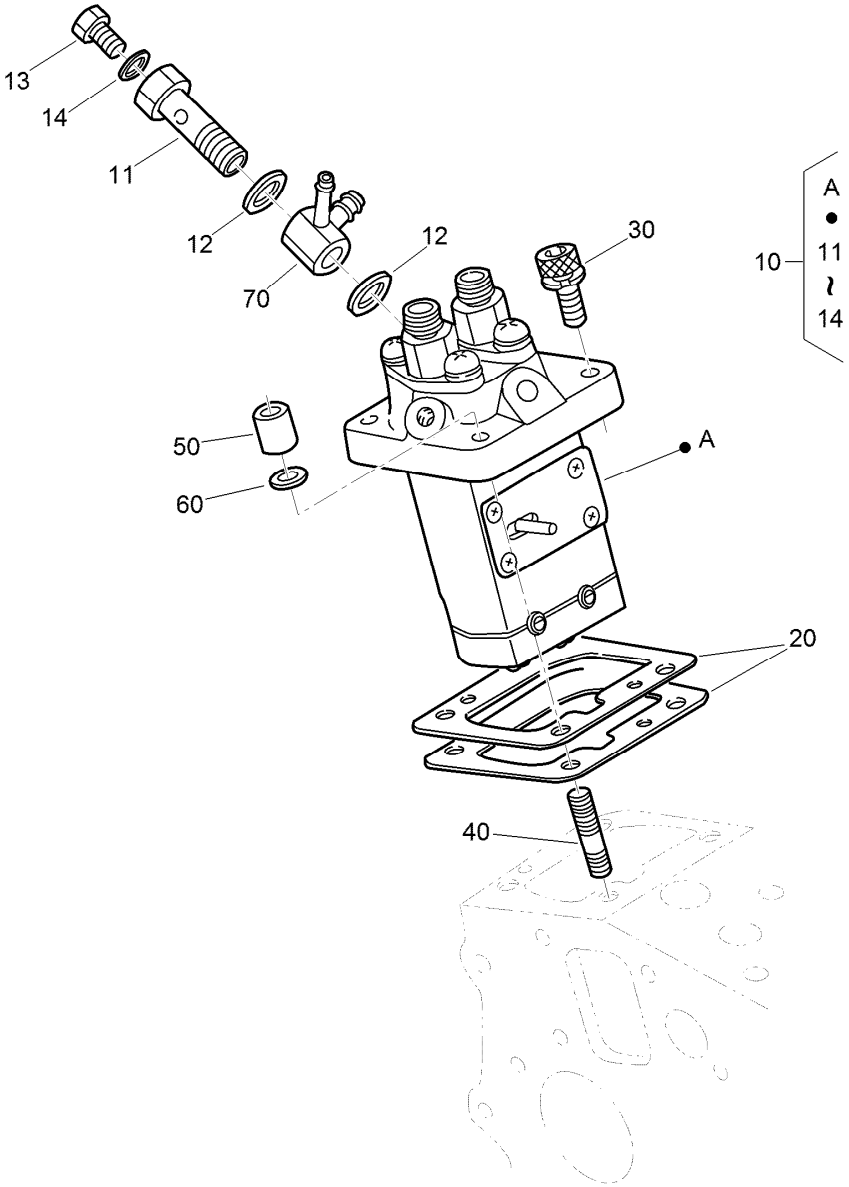

Injection Pump Assembly

Ref.	Part Number	Qty.	Description
10	130-1366	1	Injection Pump ASM
11	100-1896	1	Screw-Hollow
12	98-9445	2	Gasket
13	98-9430	1	Screw
14	98-9446	1	Gasket
20	121-3836	1	Shim-Pump, Injection (0.350Mm)
20	121-3837	1	Shim-Pump, Injection (0.175Mm)
20	121-3806	1	Shim-Pump, Injection (0.200Mm)
20	121-3807	1	Shim-Pump, Injection (0.250Mm)
20	121-3808	1	Shim-Pump, Injection (0.300Mm)
30	117-7564	3	Bolt-Hex Soc HD
40	98-9438	1	Stud
50	98-9440	1	Nut-Cap
60	98-7699	1	Washer-Spring
70	110-3764	1	Joint

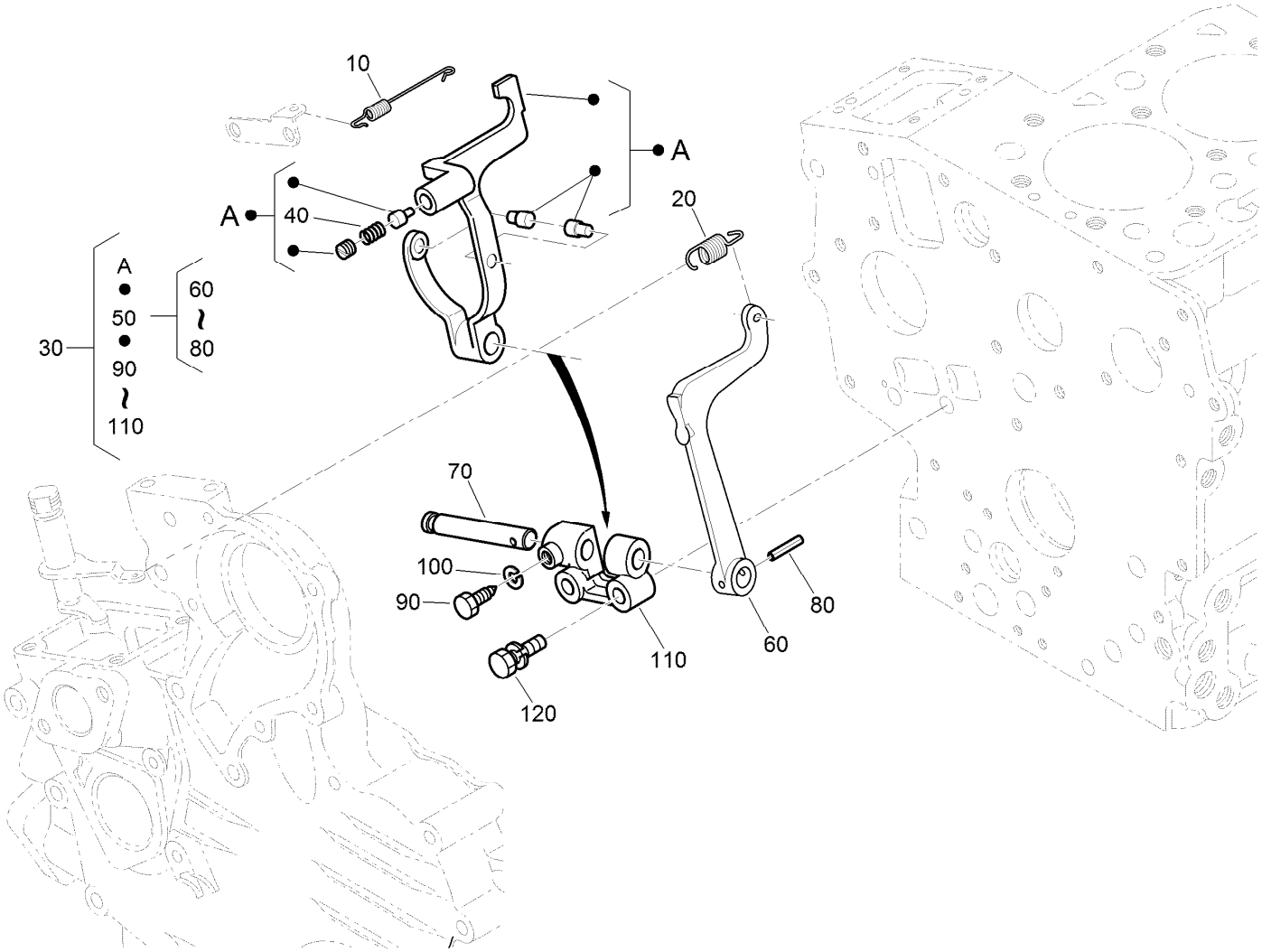

Governor Assembly

Ref.	Part Number	Qty.	Description
10	110-3766	1	Spring-Start
20	110-3767	1	Spring-Governor
30	121-3822	1	Fork Lever ASM
40	121-3803	1	Spring
50	100-1905	1	Fork Lever ASM
60	100-1907	1	Lever-Fork
70	100-1908	1	Shaft-Lever, Fork
80	100-1751	1	Pin-Spring
90	100-1845	1	Bolt
100	127-0408	1	Washer-Lock, Spring
110	100-1909	1	Holder-Lever, Fork
120	100-1763	2	Bolt

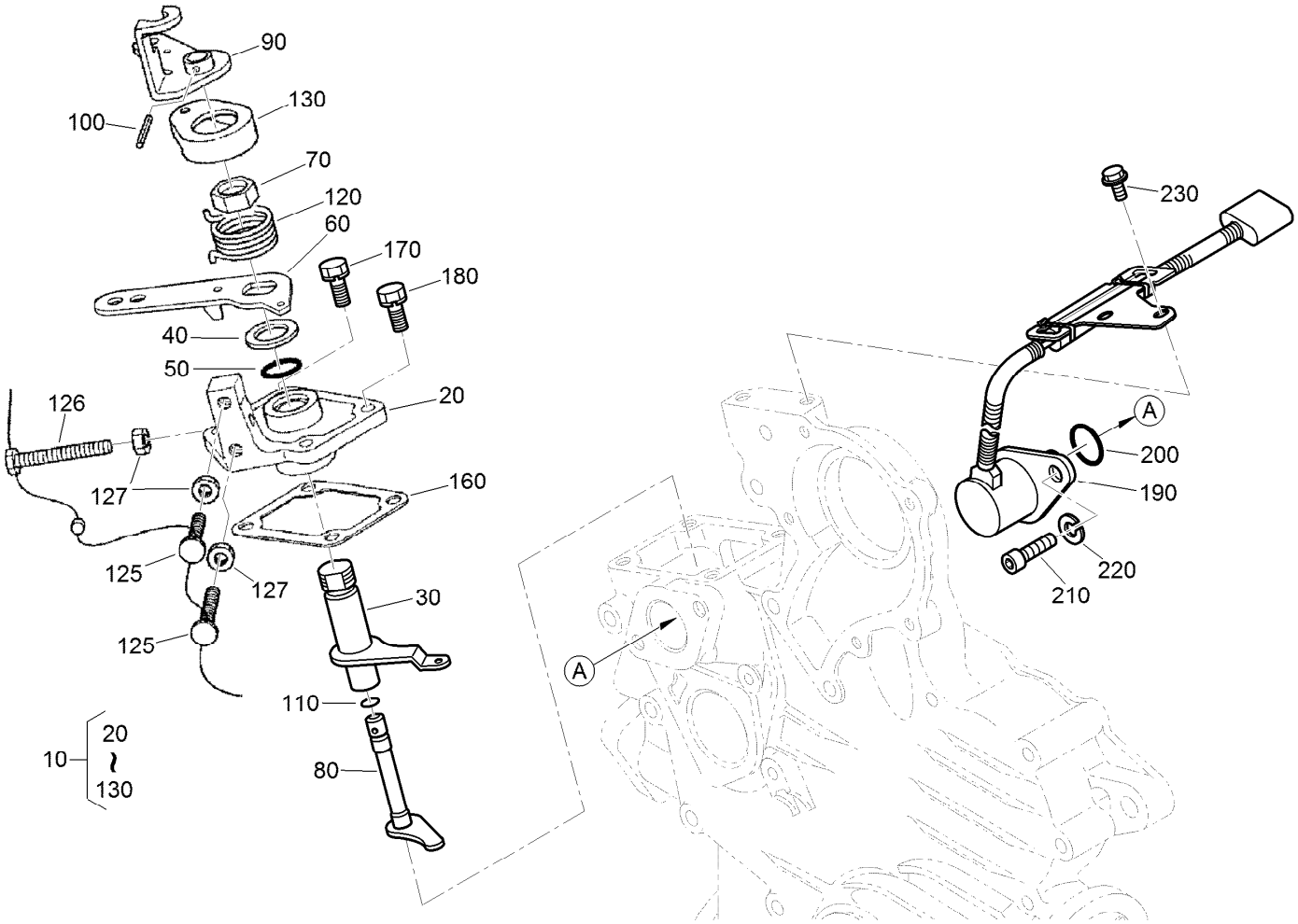

Stop Solenoid and Speed Control Plate Assembly

Ref.	Part Number	Qty.	Description
10	110-3769	1	Speed Control Plate ASM
20	110-3770	1	Plate-Control, Speed
30	110-3771	1	Lever-Governor
40	110-3772	1	Collar
50	100-2208	1	O-Ring
60	110-3773	1	Lever-Control, Speed
70	110-3774	1	Nut-Control, Speed
80	110-3775	1	Shaft-Lever
90	110-3776	1	Lever-Stop, Engine
100	110-3777	1	Pin-Spring
110	100-2207	1	O-Ring
120	110-3778	1	Spring-Return

Ref.	Part Number	Qty.	Description
125	120-3133	2	Screw-Stopper
126	120-3134	1	Bolt
127	98-7572	3	Nut
130	110-3779	1	Cap
160	100-1962	1	Gasket-Plate, Control
170	127-0403	2	Bolt-Flange
180	112-2507	2	Bolt
190	117-2719	1	Solenoid Stop ASM
200	110-3762	1	O-Ring
210	110-3763	2	Bolt-HSH
220	98-7699	2	Washer-Spring
230	100-1774	2	Bolt-Flange

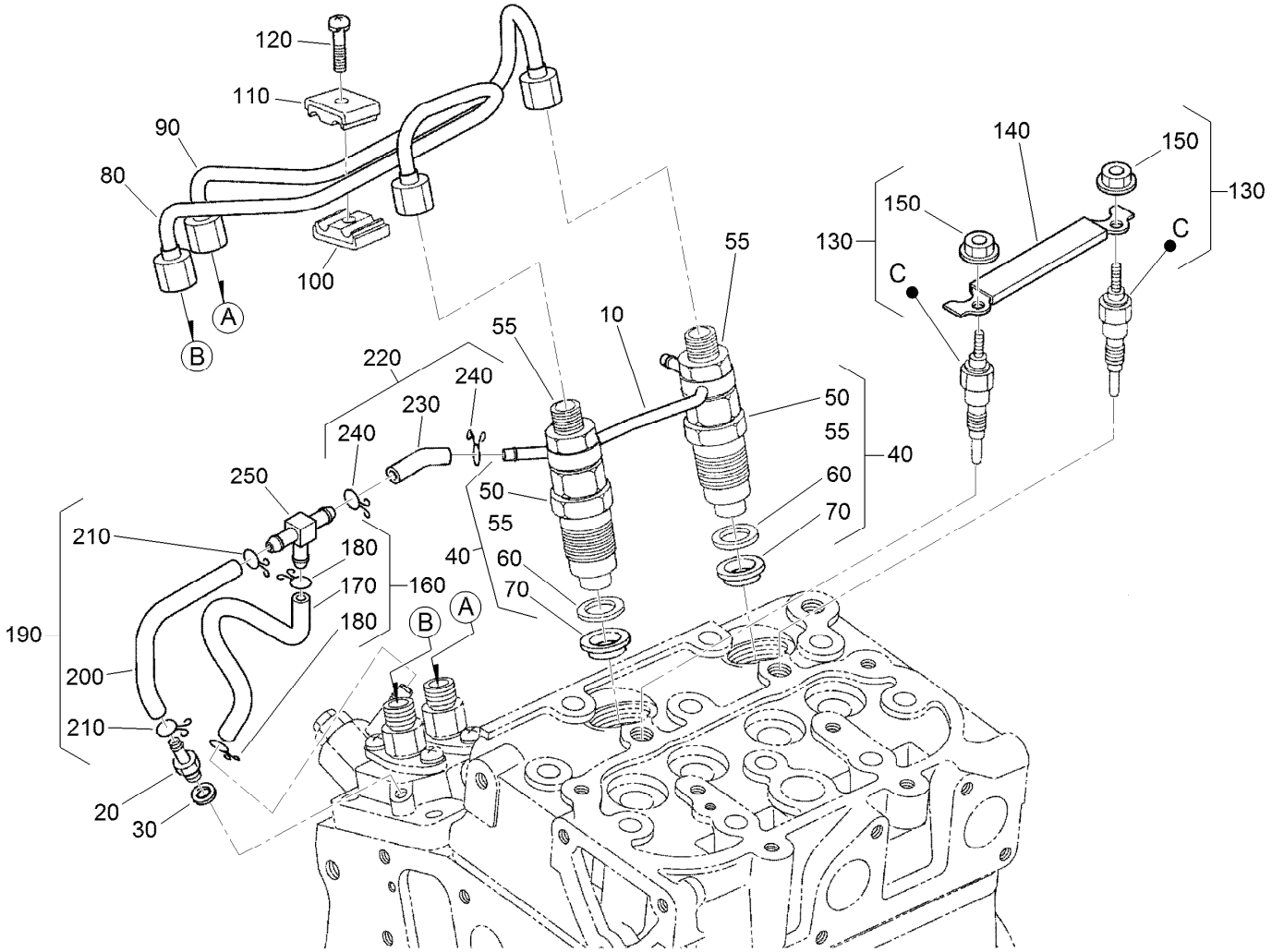

Nozzle Holder and Glow Plug Assembly

Ref.	Part Number	Qty.	Description
10	121-3833	1	Overflow Pipe ASM
20	98-9431	1	Screw-Bleeder, Air
30	98-7654	1	Gasket
40	130-1305	2	Nozzle Holder Kit
50	130-1303	2	Nozzle Holder ASM
55	130-1442	2	Nut
60	98-7676	2	Gasket
70	98-7677	2	Seal-Heat
80	130-1522	1	Pipe-Injection
90	130-1523	1	Pipe-Injection
100	98-7682	1	Clamp-Pipe
110	98-7683	1	Clamp-Pipe
120	98-7684	1	Screw (W/Washer)

Ref.	Part Number	Qty.	Description
130	130-1411	2	Plug-Glow
140	121-3834	1	Cord-Plug, Glow
150	99-8377	2	Nut-Flange
160	110-3787	1	Fuel Tube ASM
170	110-3788	1	Tube-Fuel
180	98-7671	2	Clip-Pipe
190	110-3785	1	Fuel Tube ASM
200	110-3786	1	Tube-Fuel
210	98-7671	2	Clip-Pipe
220	110-3790	1	Fuel Tube ASM
230	110-3791	1	Tube-Fuel
240	98-7671	2	Clip-Pipe
250	112-8338	1	Pipe-Joint, T

Nozzle Holder Assembly

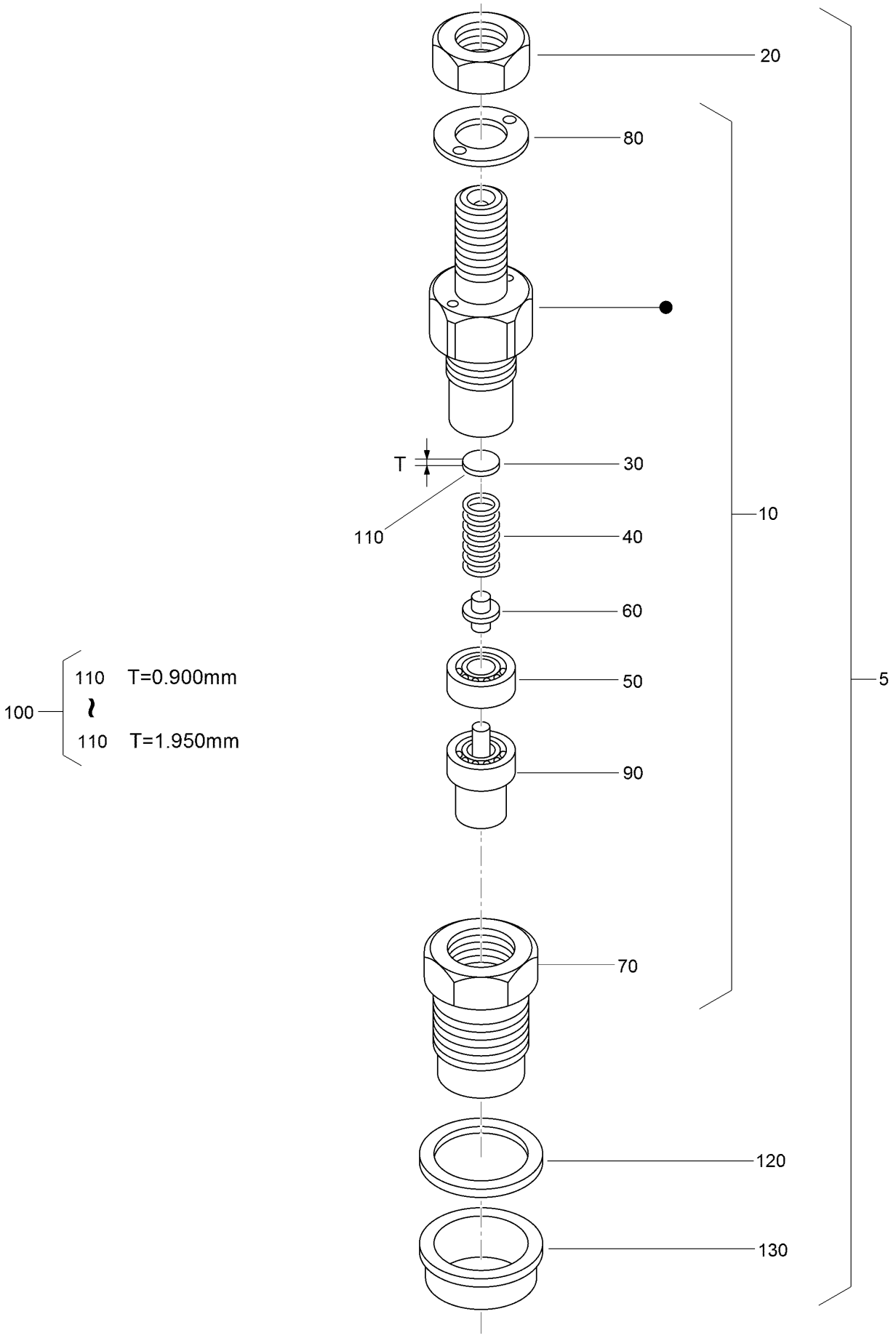

Nozzle Holder Assembly (continued)

Ref.	Part Number	Qty.	Description
5	130-1305	2	Nozzle Holder Kit
10	130-1303	2	Nozzle Holder ASM
20	130-1442	2	Nut
30	99-8302	2	Washer-Adjusting
40	99-8303	2	Spring-Nozzle
50	99-8304	2	Spacer-Distance
60	99-8305	2	Rod-Push
70	130-1304	2	Nut-Nozzle
80	99-8307	2	Washer-Plain
90	130-1497	2	Nozzle-Piece
100	98-9448	2	Adjusting Washer ASM
110	98-7642	2	Washer-Adjusting (0.900Mm)
110	98-7841	2	Washer-Adjusting (0.925Mm)
110	98-7842	2	Washer-Adjusting (0.950Mm)
110	98-7843	2	Washer-Adjusting (0.975Mm)
110	98-7844	2	Washer-Adjusting (1.000Mm)
110	98-7845	2	Washer-Adjusting (1.025Mm)
110	98-7846	2	Washer-Adjusting (1.050Mm)
110	98-7847	2	Washer-Adjusting (1.075Mm)
110	98-7848	2	Washer-Adjusting (1.100Mm)
110	98-7849	2	Washer-Adjusting (1.125Mm)
110	98-7850	2	Washer-Adjusting (1.150Mm)
110	98-7851	2	Washer-Adjusting (1.175Mm)
110	98-7852	2	Washer-Adjusting (1.200Mm)
110	98-7853	2	Washer-Adjusting (1.225Mm)
110	98-7854	2	Washer-Adjusting (1.250Mm)
110	98-7855	2	Washer-Adjusting (1.275Mm)
110	98-7856	2	Washer-Adjusting 1.300Mm)
110	98-7857	2	Washer-Adjusting (1.325Mm)
110	98-7858	2	Washer-Adjusting (1.350Mm)
110	98-7859	2	Washer-Adjusting (1.375Mm)
110	98-7860	2	Washer-Adjusting (1.400Mm)
110	98-7861	2	Washer-Adjusting (1.425Mm)
110	98-7862	2	Washer-Adjusting (1.450Mm)
110	98-7863	2	Washer-Adjusting (1.475Mm)
110	98-7864	2	Washer-Adjusting (1.500Mm)
110	98-7865	2	Washer-Adjusting (1.525Mm)
110	98-7866	2	Washer-Adjusting (1.550Mm)
110	98-7867	2	Washer-Adjusting (1.575Mm)
110	98-7868	2	Washer-Adjusting (1.600Mm)
110	98-7869	2	Washer-Adjusting (1.625Mm)
110	98-7870	2	Washer-Adjusting (1.650Mm)
110	98-7871	2	Washer-Adjusting (1.675Mm)
110	98-7872	2	Washer-Adjusting (1.700Mm)
110	98-7873	2	Washer-Adjusting (1.725Mm)
110	98-7874	2	Washer-Adjusting (1.750Mm)
110	98-7875	2	Washer-Adjusting (1.775Mm)
110	98-7876	2	Washer-Adjusting (1.800Mm)
110	98-7877	2	Washer-Adjusting (1.825Mm)
110	98-7878	2	Washer-Adjusting (1.850Mm)
110	98-7879	2	Washer-Adjusting (1.875Mm)
110	98-7880	2	Washer-Adjusting (1.900Mm)
110	98-7881	2	Washer-Adjusting (1.925Mm)
110	98-7882	2	Washer-Adjusting (1.950Mm)
120	98-7676	2	Gasket
130	98-7677	2	Seal-Heat

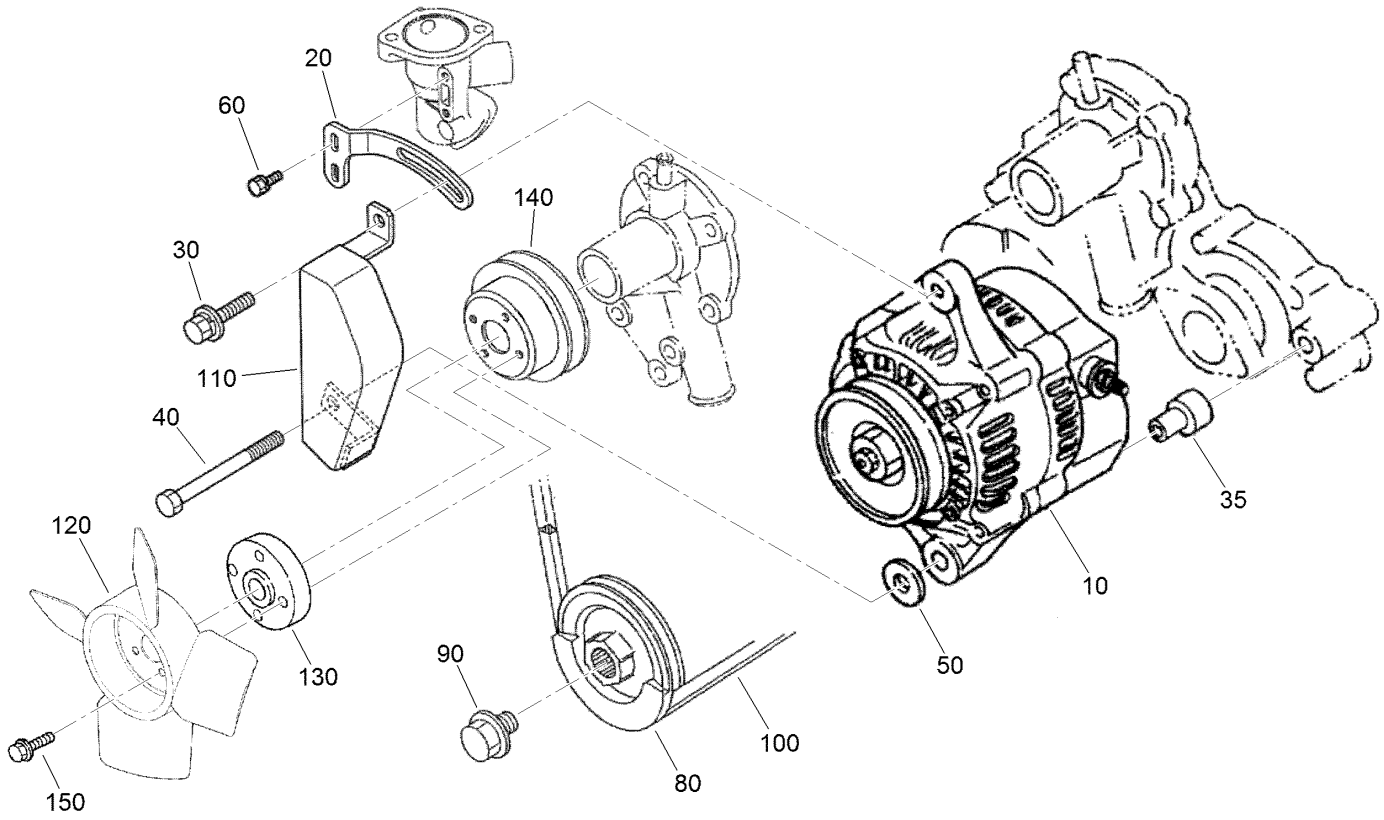

Alternator, Pulley and Fan Assembly

Ref.	*Part Number*	*Qty.*	*Description*
10	121-3811	1	Alternator ASM
20	110-3792	1	Stay-Alternator
30	121-3800	1	Bolt-Sems
35	110-3794	1	Collar
40	110-3793	1	Bolt
50	120-5832	1	Washer-Plain
60	98-7692	2	Bolt
80	121-3809	1	Regulator ASM
90	100-1978	1	Bolt
100	112-2511	1	Belt
110	110-3797	1	Cover
120	121-3804	1	Fan
130	108-2872	1	Collar-Fan
140	100-1921	1	Pulley-Fan
150	108-2873	4	Bolt-Flange

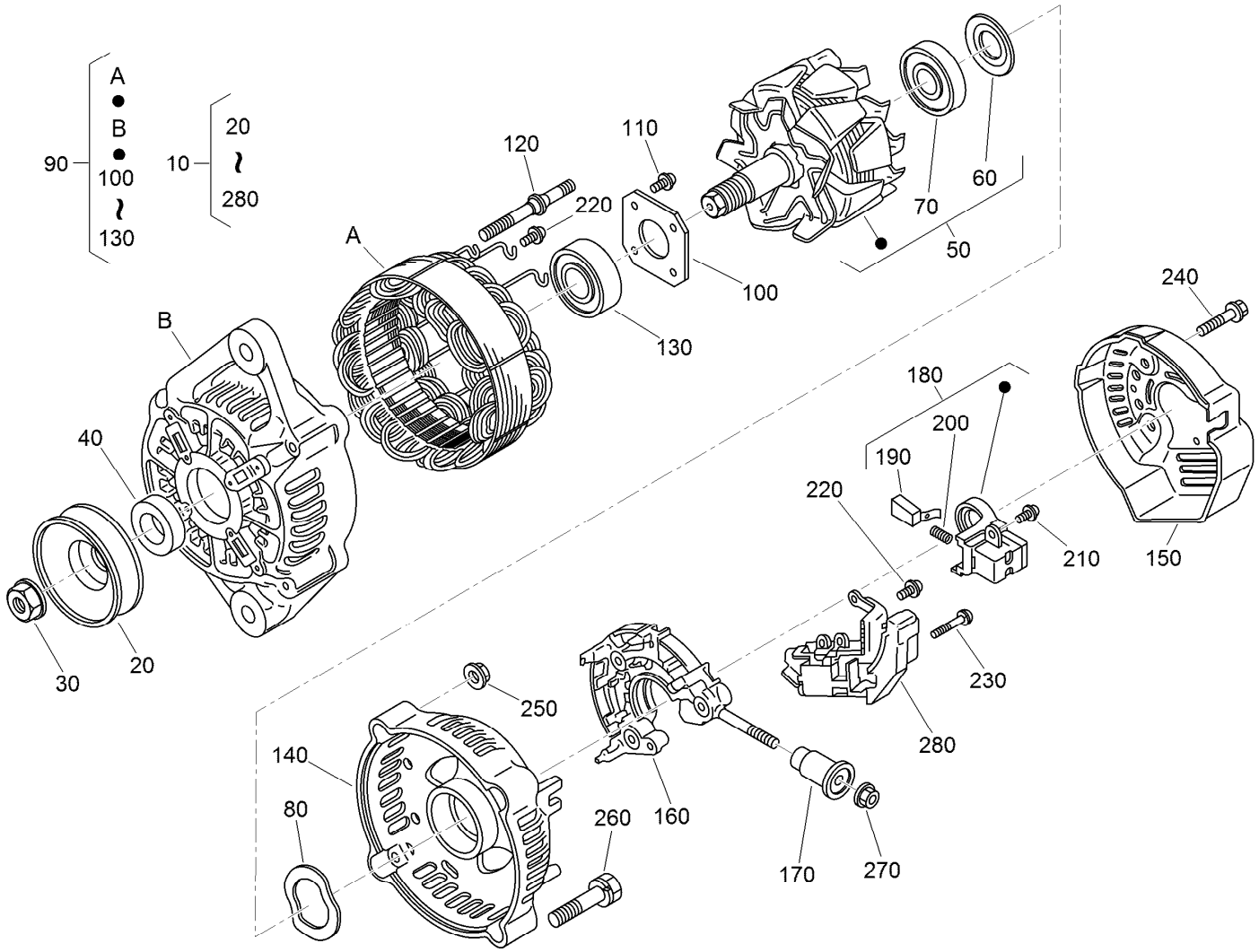

Alternator Components Assembly

Ref.	Part Number	Qty.	Description
10	121-3811	1	Alternator ASM
20	98-9453	1	Pulley-Dynamo
30	98-7708	1	Nut
40	98-7709	1	Collar
50	107-0136	1	Rotor ASM
60	98-7711	1	Cover-Bearing
70	107-0138	1	Bearing-Ball
80	98-7713	1	Washer-Thrust
90	107-0139	1	Drive End Frame ASM
100	98-7715	1	Plate-Retainer
110	98-7716	4	Screw-Head, Round
120	98-7717	2	Bolt-Through
130	133-2811	1	Bearing
140	121-3812	1	Frame-End

Ref.	Part Number	Qty.	Description
150	121-3813	1	Cover-End
160	121-3805	1	Rectifier ASM
170	117-0321	1	Insulation-Brush
180	107-0141	1	Brush Holder ASM
190	98-7724	2	Brush
200	98-7725	2	Spring-Brush
210	98-7726	2	Screw-Head, Round
220	98-7727	6	Screw-Head, Round
230	98-7728	1	Screw-Head, Round
240	98-7729	3	Bolt
250	98-7730	2	Nut
260	98-7731	2	Bolt
270	98-7732	1	Nut
280	121-3809	1	Regulator ASM

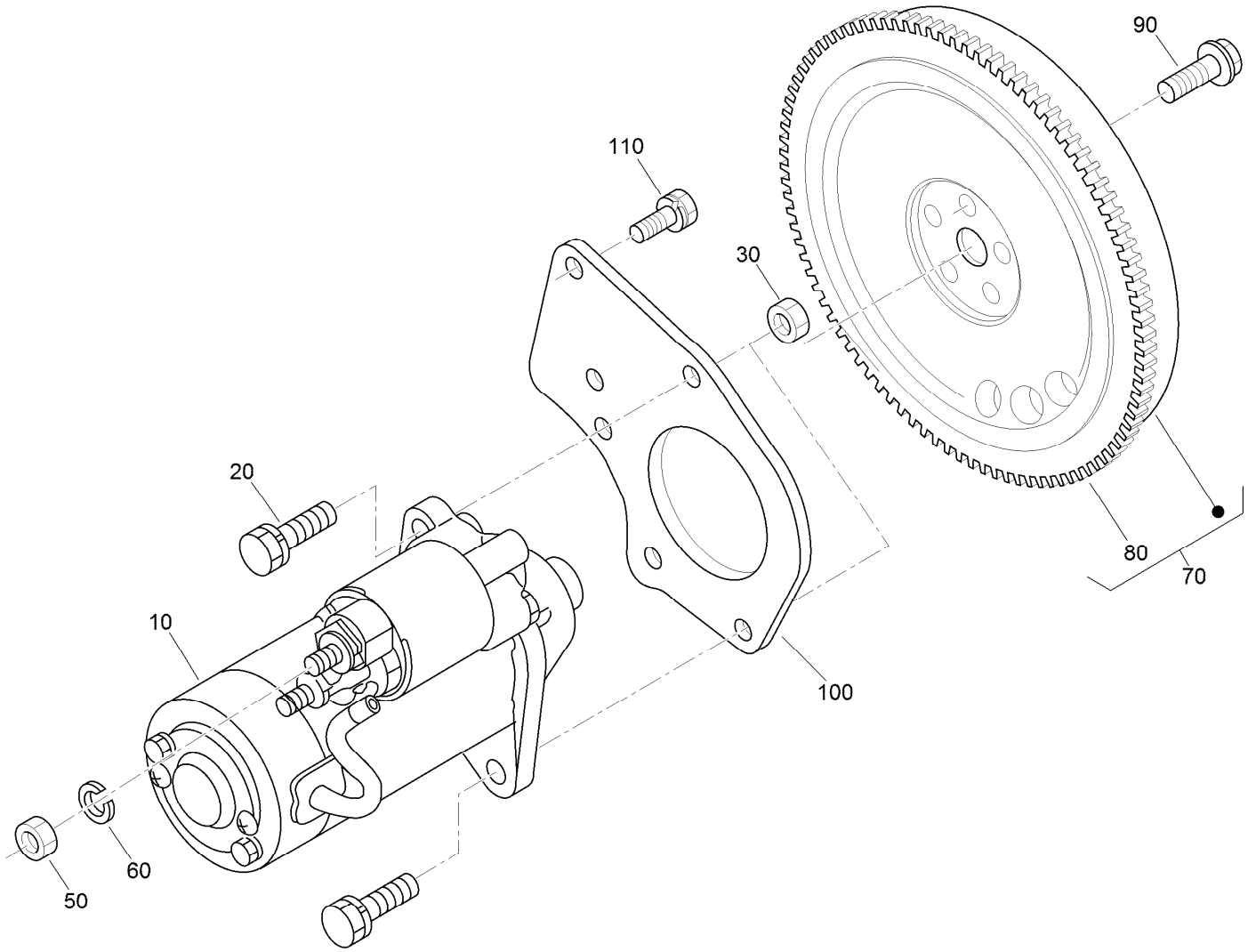

Starter and Flywheel Assembly

Ref.	*Part Number*	*Qty.*	*Description*
10	121-3816	1	Starter ASM
20	98-7697	2	Bolt
30	98-7534	2	Nut
50	98-7534	1	Nut
60	105-2893	1	Washer-Spring
70	130-1296	1	Flywheel ASM
80	127-1604	1	Gear-Ring
90	100-1930	5	Bolt-Flywheel
100	117-0323	1	Plate-End, Rear
110	110-3754	3	Bolt

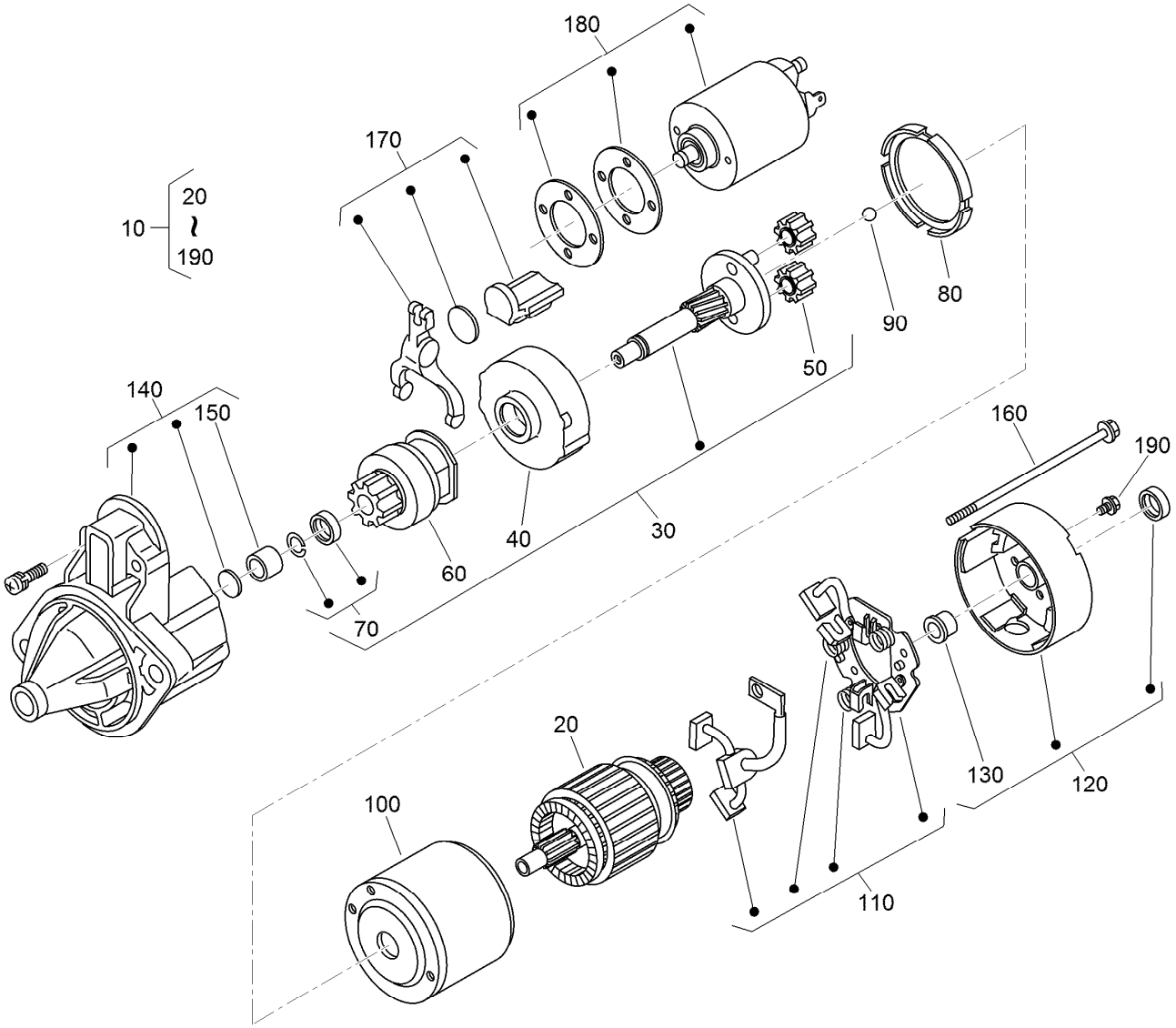

Starter Component Assembly

Ref.	Part Number	Qty.	Description
10	121-3816	1	Starter ASM
20	121-3817	1	Armature
30	110-3802	1	Shaft ASM
40	120-3142	1	Gear-Internal
50	110-3804	3	Gear-Planetary
60	110-3805	1	Clutch-Running, Over
70	110-3806	1	Stopper
80	120-3143	1	Gasket
90	110-3808	1	Ball
100	130-1298	1	Yoke

Ref.	Part Number	Qty.	Description
110	110-3810	1	Brush Holder ASM
120	110-3811	1	Rear Bracket ASM
130	110-3812	1	Bushing
140	110-3813	1	Front Bracket ASM
150	110-3814	1	Bushing
160	121-3846	2	Bolt
170	110-3816	1	Fork Lever ASM
180	125-9099	1	Switch-Magnetic
190	110-3818	4	Screws (Set Of 4)

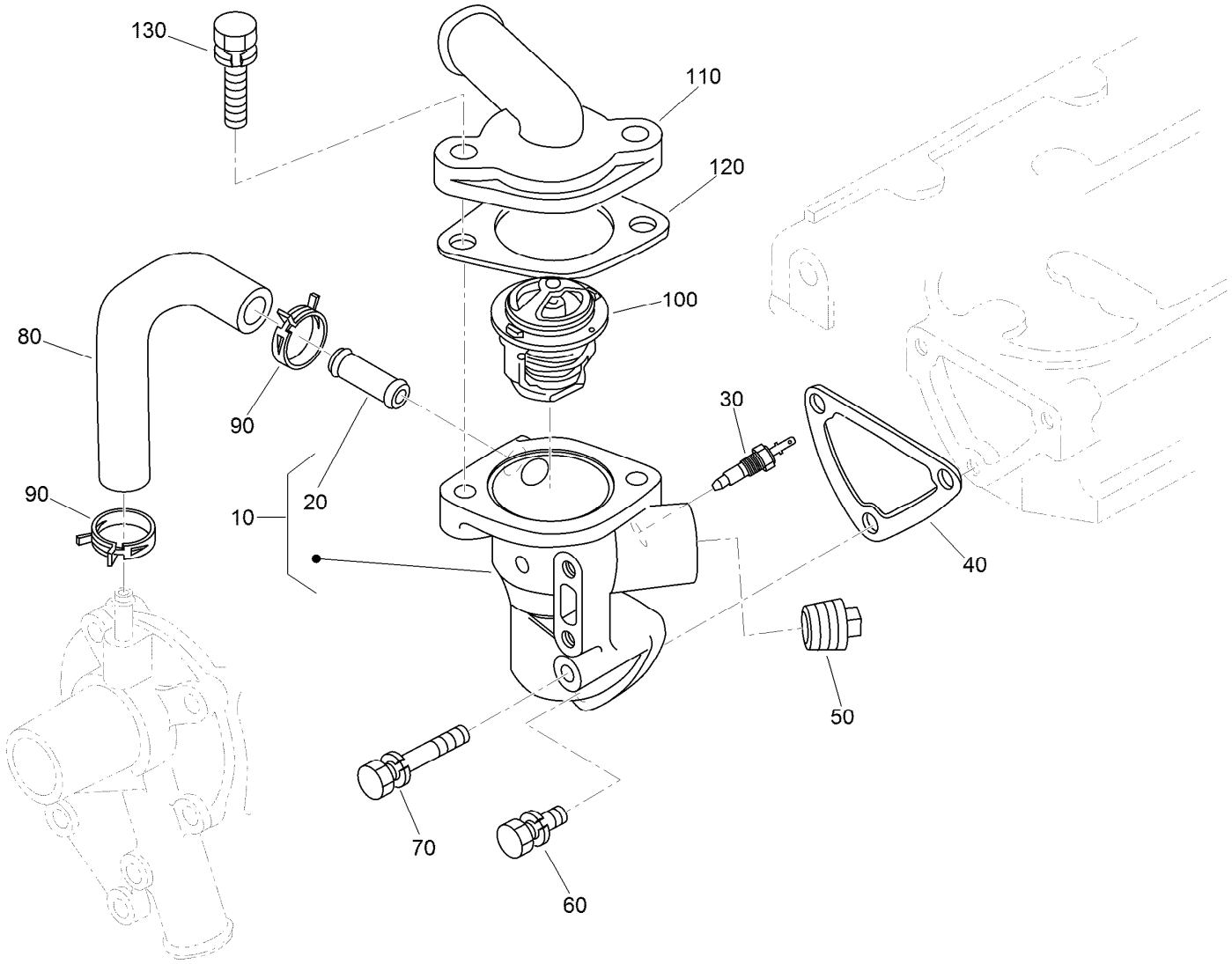

Water Flange and Thermostat Assembly

Ref.	Part Number	Qty.	Description
10	110-3819	1	Water Flange ASM
20	98-9580	1	Pipe-Return, Water
30	99-3582	1	Thermoswitch
40	110-3820	1	Gasket-Flange, Water
50	110-3821	1	Plug
60	98-7692	2	Bolt
70	125-9063	1	Bolt-Sems
80	110-3822	1	Pipe-Return, Water
90	125-9078	2	Clamp-Hose
100	98-7778	1	Thermostat ASM
110	110-3823	1	Cover-Thermostat
120	105-3748	1	Gasket-Thermostat
130	98-7777	2	Bolt

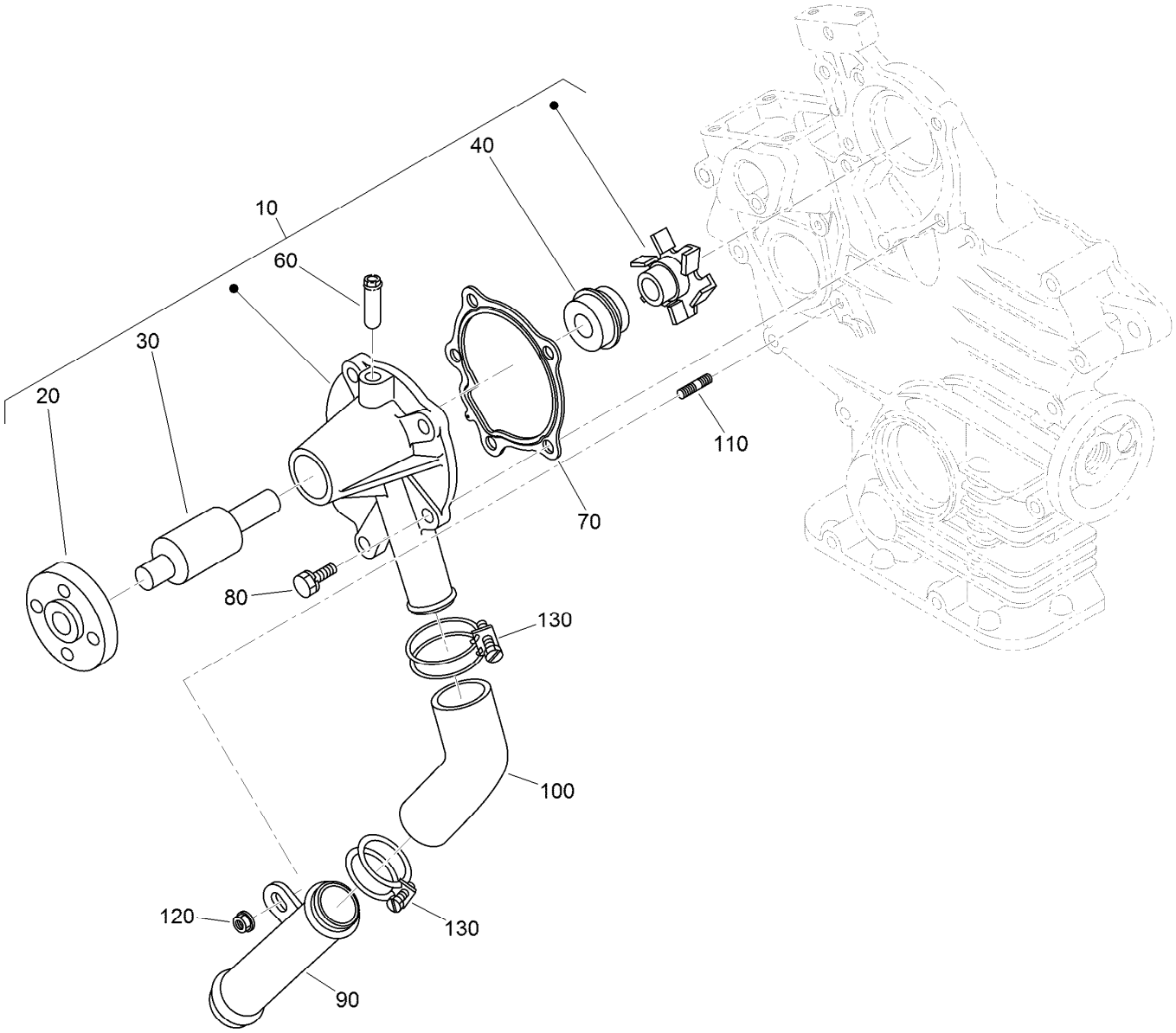

Water Pump and Water Pipe Assembly

Ref.	Part Number	Qty.	Description
10	110-3824	1	Water Pump ASM
20	125-9081	1	Flange-Pump, Water
30	100-1934	1	Bearing-Ball
40	99-3518	1	Water Pump Seal ASM
60	100-1932	1	Pipe-Return, Water
70	117-0330	1	Gasket-Pump, Water
80	100-1750	4	Bolt
90	100-1918	1	Pipe-Water
100	110-3827	1	Pipe-Water
110	100-1924	1	Stud
120	100-2203	1	Nut-Flange
130	110-3828	2	Band-Pipe

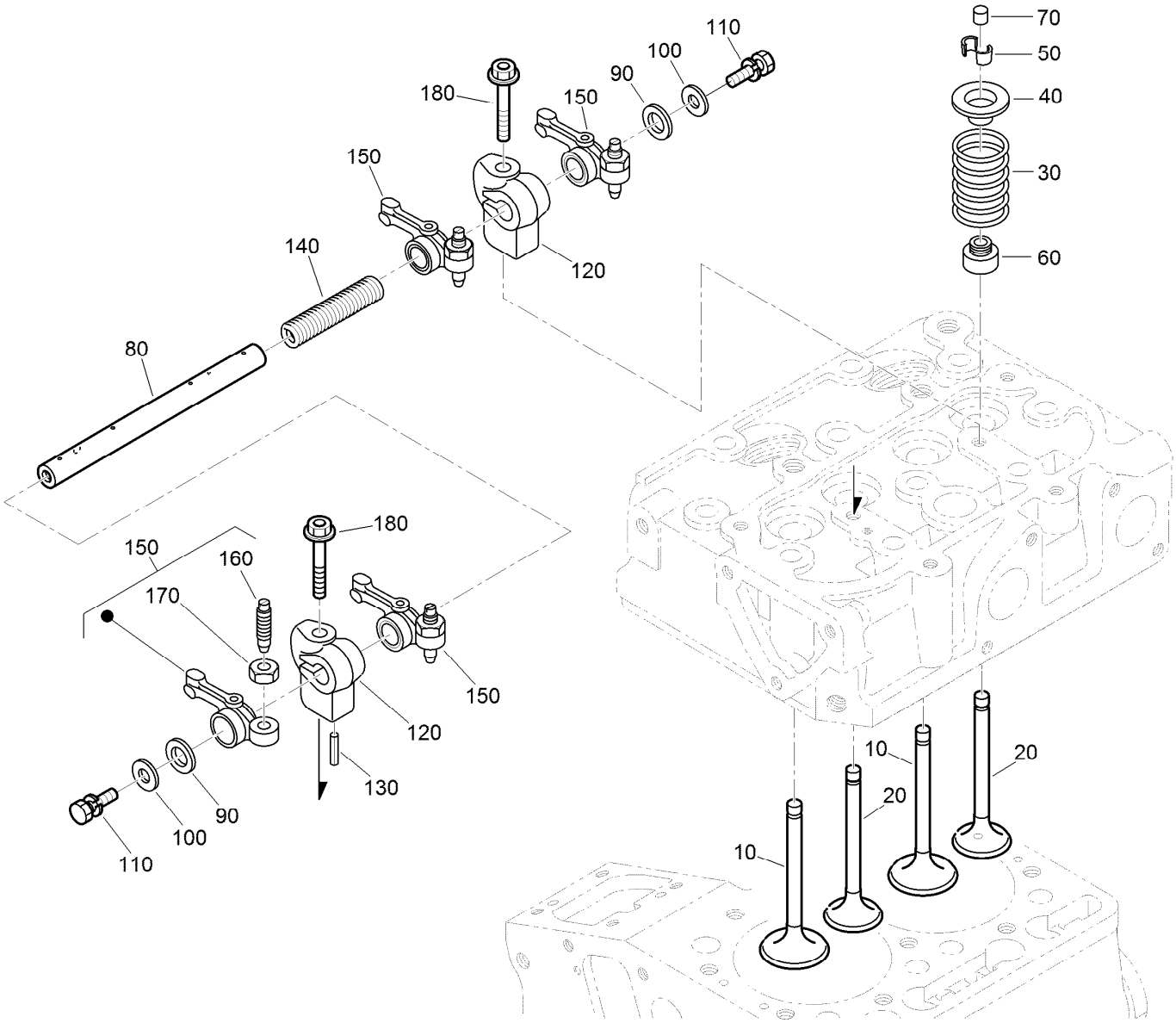

Valve and Rocker Arm Assembly

Ref.	Part Number	Qty.	Description
10	112-2514	2	Valve-Inlet
20	112-2515	2	Valve-Exhaust
30	100-1823	4	Spring-Valve
40	100-1825	4	Retainer-Spring, Valve
50	120-3136	4	Collet-Spring, Valve
60	100-1797	4	Seal-Stem, Valve
70	100-2155	4	Cap-Valve
80	121-3827	1	Shaft-Arm, Rocker
90	100-2044	2	Washer

Ref.	Part Number	Qty.	Description
100	110-3832	2	Washer-Plain
110	100-1762	2	Bolt
120	110-3833	2	Bracket-Arm, Rocker
130	98-7602	1	Pin-Spring
140	112-8342	1	Spring
150	100-1884	4	Rocker Arm ASM
160	100-1885	4	Screw-Adjusting
170	100-1827	4	Nut
180	110-3834	2	Bolt-Flange

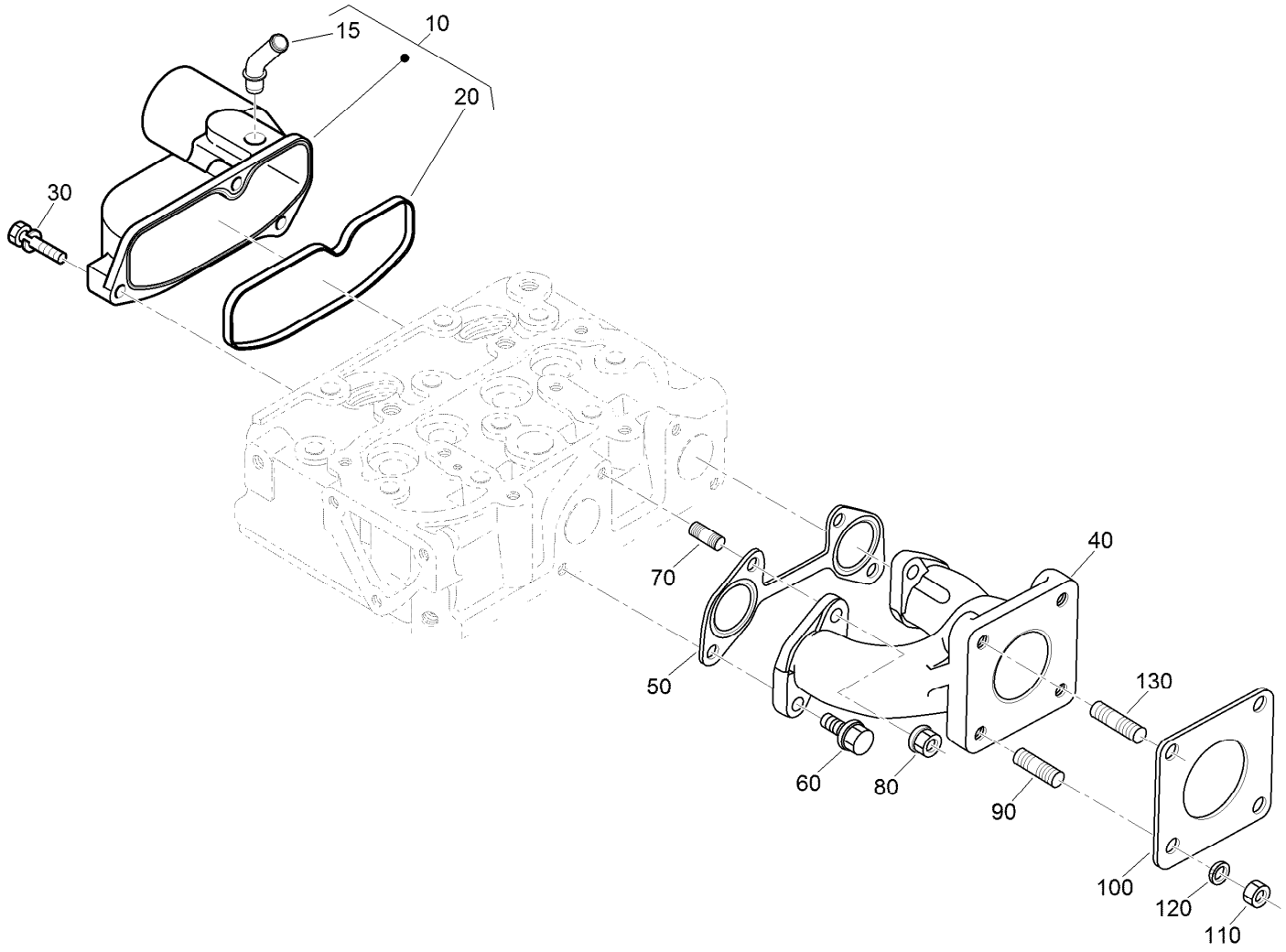

Inlet and Exhaust Manifold Assembly

Ref.	Part Number	Qty.	Description
10	121-3840	1	Intake Manifold ASM
15	121-2417	1	Pipe-Breather
20	121-3825	1	Gasket- Manifold, Intake
30	98-9352	3	Bolt
40	121-3844	1	Manifold-Exhaust
50	121-3826	1	Gasket-Manifold, Exhaust
60	130-1154	2	Screw-Hex HD
70	130-1156	2	Bolt-Stud
80	100-1778	2	Nut
90	98-7769	3	Stud
100	99-8343	1	Gasket-Muffler
110	98-7534	4	Nut
120	105-2893	4	Washer-Spring
130	120-4862	1	Stud-Exhaust, Long

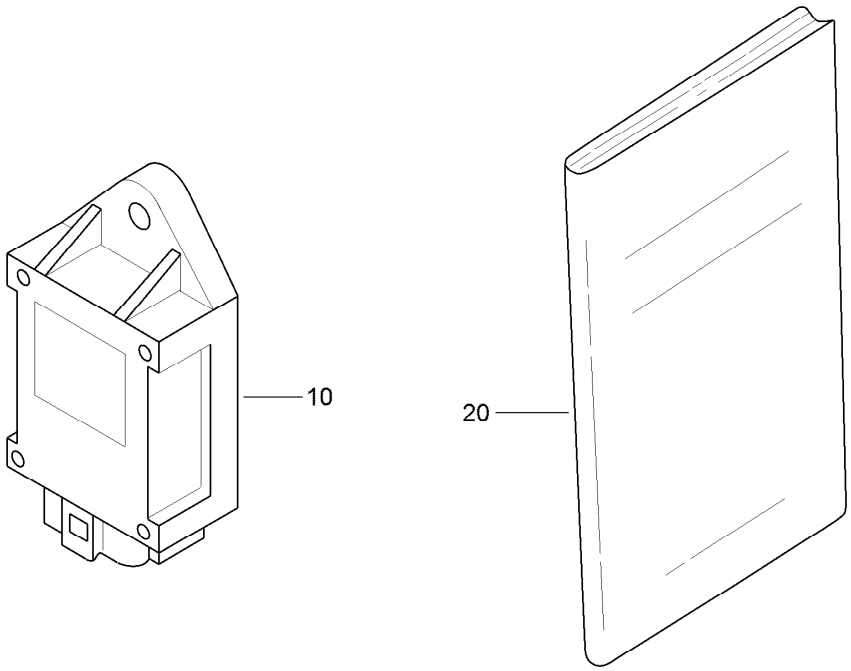

Miscellaneous Engine Parts

Ref.	*Part Number*	*Qty.*	*Description*
10	98-7611	1	Controller-Glow
20	130-1513	1	Manual-Operator

Attachments and Accessories

For 07236 Workman MDX-D Utility Vehicle

Product Name	Model/Part
Brush Guard Kit	07145
Aggressive Tire Kit	07175
Roll-Over Protection System	07276
Receiver Hitch Kit	07278
Cab Kit	07320
Canopy Kit	07324
Solid Windshield Kit	07325
Folding Windshield Kit	07326
Heater Kit	07349
Door Kit with Sliding Window	07356
Electric Bed Lift Kit, 2014 and After Workman MD/MDX/MDX-D Utility Vehicle	07389
Tire-AT 489, 24x10.5-10	104-7061
Tire-AT 489, 22x9.5-10	104-7062
Lift Wire Harness Kit	115-7823
Backup Alarm Kit	115-7824
Horn Kit	115-7825
Tapered Nozzle Kit	119-6280
Rectangular Nozzle Kit	119-6281
Nozzle-Extension, Straight	119-6282
Nozzle-Extension, Tapered	119-6283
Nozzle-Extension, Rectangular	119-6284
Side Mirror Kit	119-9546
Stake Pocket Adapter Kit, 2011 and After Workman MD Series Utility Vehicle	119-9604
Tie-Down Kit, 2011 and After Workman MD Series Utility Vehicle	119-9605
Battery Kit	119-9680
Road Light and Homologation Kit	120-5031
Brake and Signal Light Kit	120-5044
Cargo Bed Installation Kit with Manual Dump, 2011 to 2013 Workman MD Series Utility Vehicle	127-7385
Cargo Bed Installation Kit with Electric Lift, 2011 to 2013 Workman MD Series Utility Vehicle	127-7386
Exterior Mirror Kit	130-5448
Interior Mirror Kit	130-5449
Beacon Kit	130-5484
Work Light Kit	130-5485
Windshield Washer Fluid Kit, 2015 and after Workman MD/HD Series Utility Vehicle	130-5615
Cargo Bed Installation Kit with Manual Dump, 2010 and Before Workman MD Series Utility Vehicle	131-3457
Hitch Asm	131-3462
Spanner Wrench	132-5069
LED Worklight Kit	133-0554
ROPS Beacon Kit	133-0609
Front Spring Kit, 2016 and After MDX or MDX-D Series Utility Vehicle	133-0630
Service Hood ASM	133-7209
Pro Force Debris Blower	44538
Bed Mount Kit, Pro Force Debris Blower	44543
Spark Arrestor Screen	94-8157

TORO®

Count on it.