Form No. 3425-160 Rev A

TORO®

Count on it.

Parts Catalog

HoverPro®

400 Machine

Model No. 02615—Serial No. 403230000 and Up

Register at www.Toro.com.
Original Instructions (EN)

CE

3425-160 A

Ordering Replacement Parts

To order replacement parts, please supply the part number, the quantity, and the description of each part desired.

Understanding Reference Numbers

Each identified part in an illustration has a reference number. The reference number for a part also appears in the parts list, along with other information about the part.

This catalog uses two special reference number formats, one to indicate parts in a service assembly and another to indicate the quantity of a given part in an illustration.

Service Assembly Reference Numbers

Parts in service assemblies have reference numbers in the form a:b. The a represents the reference number of the entire service assembly and the b represents a sequential number unique to each part within the service assembly.

For example, a wheel assembly might be identified by reference number 6, the tire by 6:1, the valve by 6:2, and the wheel by 6:3. When you order the assembly identified by reference number 6, you receive all parts identified by reference numbers 6:1,6:2, and 6:3. However, you may also order any part individually. Reference numbers of this type appear in illustration and in parts lists.

Reference Numbers Indicating Quantity

In an illustration, if a reference number indicates more than one part, the reference number has the form nX y. The n represents the quantity of the part, the X is the multiplication symbol, and the y represents the reference number.

For example, in an illustration, the reference number 2X 37 means that two of the parts identified by reference number 37 are indicated.

Contents

Cutting Assembly 4
Engine and Deck Assembly 6
Cylinder Barrel Assembly 8
Oil Case Assembly 10
Crankcase Cover Assembly 12
Crankshaft Assembly 14
Piston and Connecting Rod Assembly 16
Camshaft Assembly 18
Recoil Starter Assembly 20
Fan Cover Assembly 22
Carburetor Assembly 24
Air Cleaner Assembly 26
Muffler Assembly 28
Fuel Tank Assembly 30
Flywheel and Ignition Coil Assembly 32
Control Assembly 34
Label Assembly 36
Decal Assembly 38
Handle Assembly 40
Attachments and Accessories 42

© 2018—The Toro® Company
8111 Lyndale Avenue South
Bloomington, MN 55420

Contact us at www.Toro.com.
Printed in the USA.
All Rights Reserved

Cutting Assembly

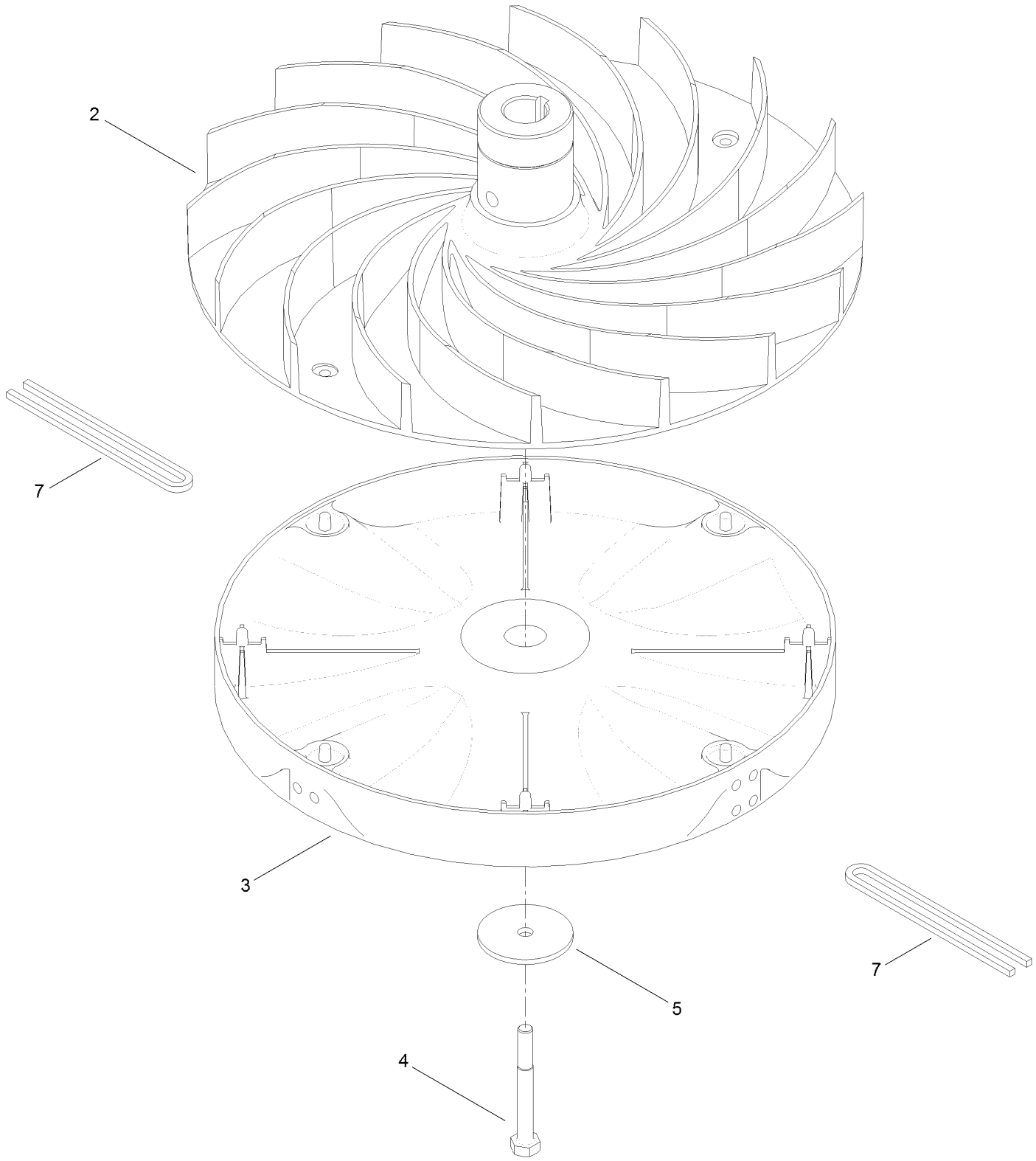

Cutting Assembly (continued)

Ref.	Part Number	Qty.	Description
2	111-1302	1	Impeller
3	111-1381	1	Disc-Cutting
4	111-1504	1	Bolt-HH
5	111-1515	1	Disc-Spring
7	111-5251	2	Line-Cutting, Nylon

Engine and Deck Assembly

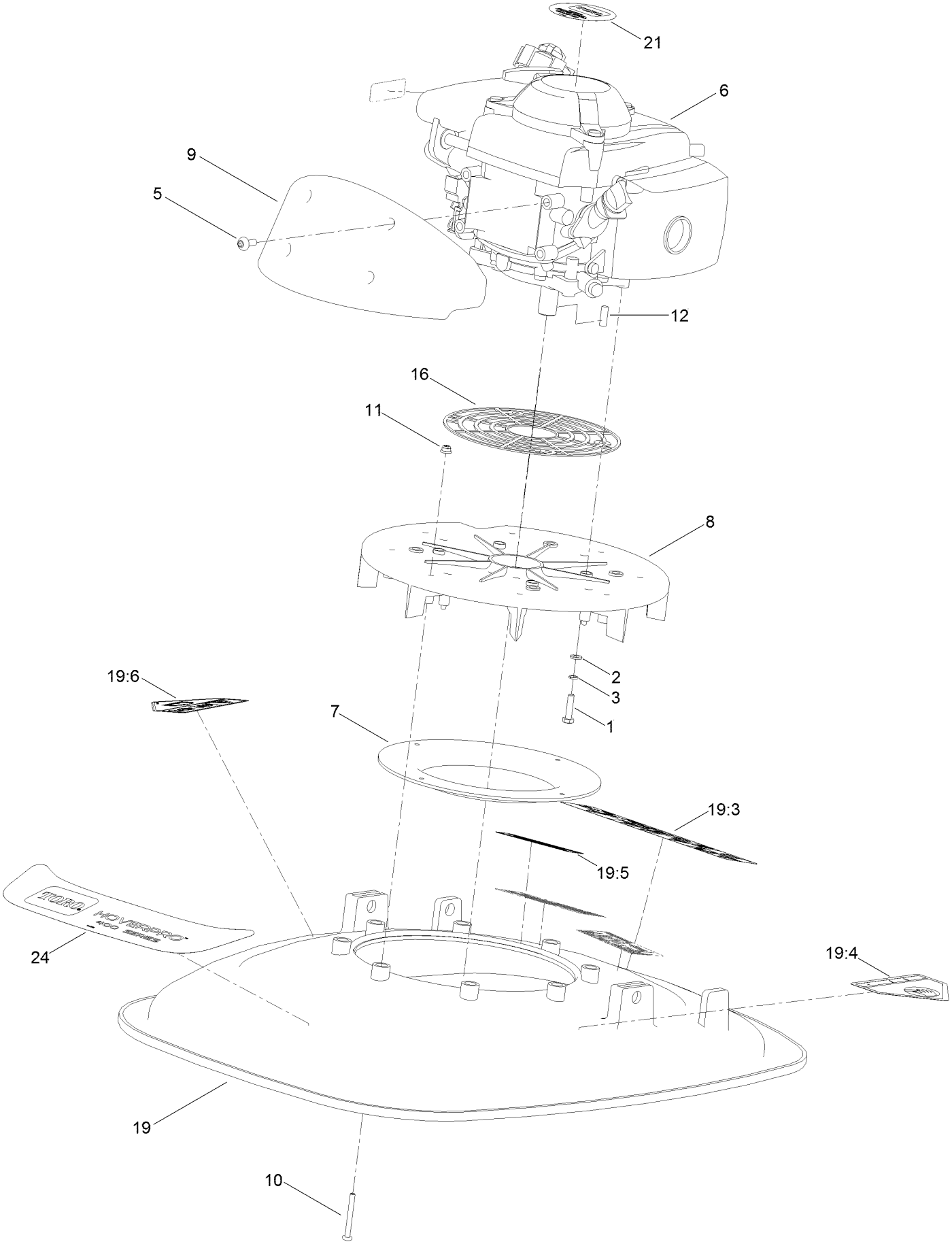

Engine and Deck Assembly (continued)

Ref.	Part Number	Qty.	Description
1	09364	4	Screw-HH
2	09472	4	Washer-Plain
3	09474	4	Washer-Spring
5	09784	4	Screw-Soc, HD
6	111-7161	1	Engine-Honda
7	111-1299	1	Bell-Mouth
8	111-1300	1	Plate-Engine
9	111-5480	1	Cover-Sump
10	111-1501	8	Screw-PPH
11	111-1502	8	Nut-HHF, Ny

Ref.	Part Number	Qty.	Description
12	111-1503	1	Key-Drive, Square Ended
16	111-4675	1	Sink-Heat
19	111-6002	1	Deck
19:3	111-5392	1	Decal-Warning
19:4	94-8072	1	Decal-Danger
19:5	111-1210	1	Decal
19:6	111-9826	1	Decal-Danger
21	111-5361	1	Decal-Engine
24	111-5348	1	Decal-Hover Pro

Cylinder Barrel Assembly

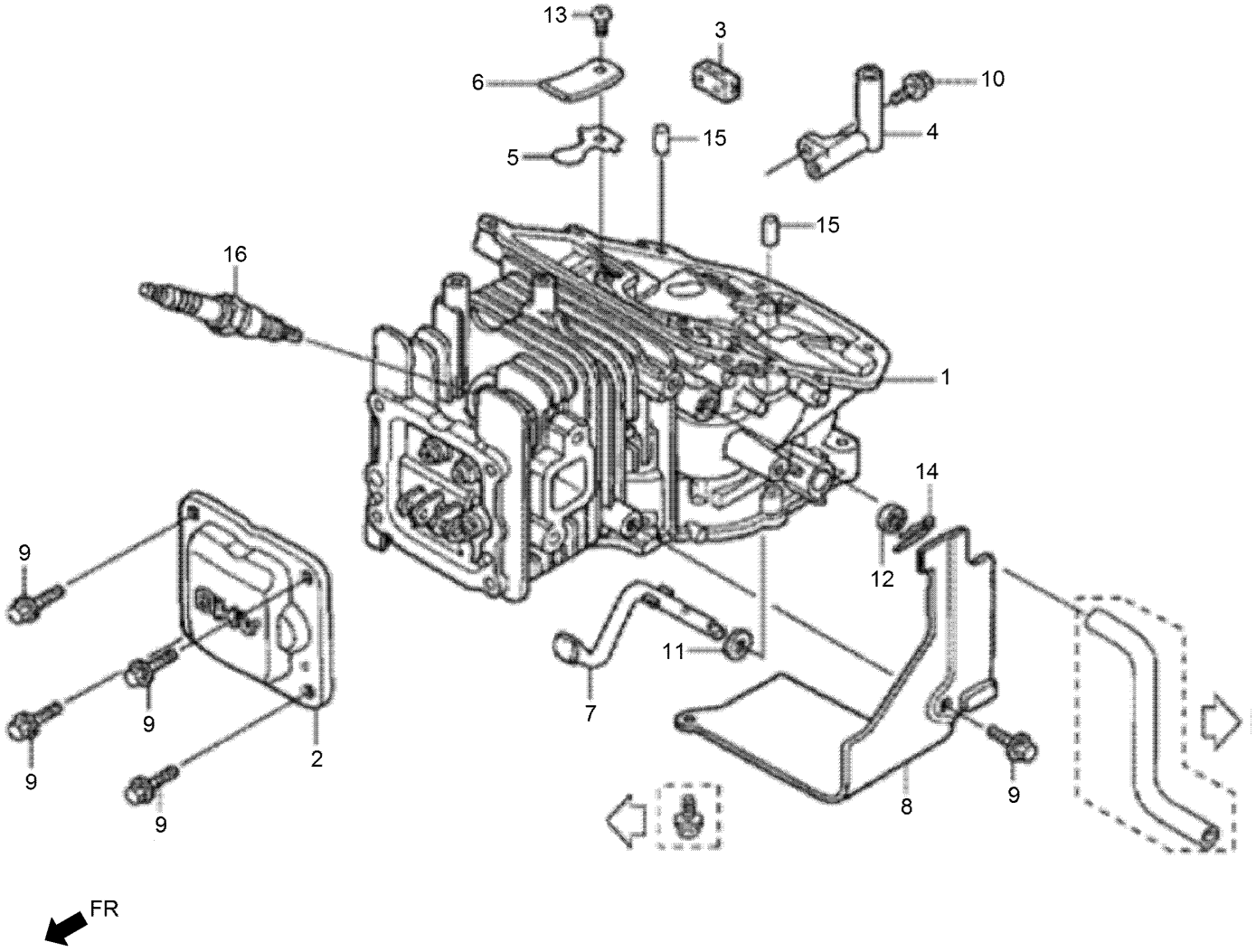

Cylinder Barrel Assembly (continued)

Ref.	Part Number	Qty.	Description
1	132-0117	1	Cylinder Barrel ASM
2	132-0130	1	Cover-Head
3	132-0132	1	Filter-Breather
4	132-0216	1	Pipe-Breather
5	132-0218	1	Valve-Oil Outlet
6	132-0219	1	Plate-Stopper
7	132-0309	1	Shaft-Governor Arm
8	132-0474	1	Shroud
9	132-0577	5	Bolt-Flange-5X12
10	132-0588	1	Bolt-4X10
11	132-0634	1	Washer-5.2X9
12	132-0652	2	Roller-6X14.8
13	132-0662	1	Oil Seal-5X11X5
14	132-0675	1	Screw-Pan-3X5
15	132-0692	1	Pin-Lock-6Mm
16	131-8229	1	Sparkplug (U16Fsr-Ub)
16	131-8230	1	Sparkplug (Cr4Hsb)

Oil Case Assembly

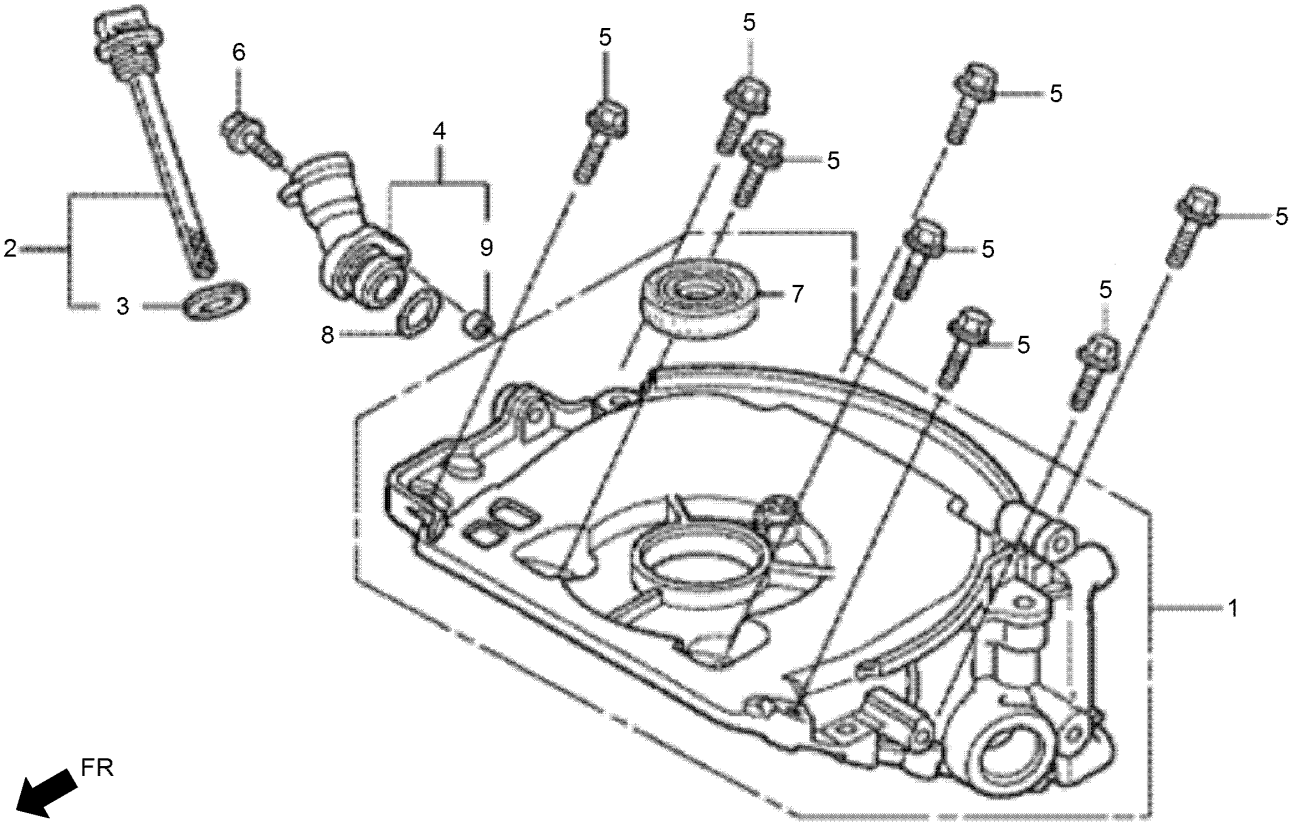

Oil Case Assembly (continued)

Ref.	Part Number	Qty.	Description
1	132-0106	1	Case ASM-Oil
2	132-0222	1	Cap ASM-Oil Filler
3	132-0224	1	Packing-Oil Filler Cap
4	132-0228	1	Extension-Oil Filler
5	132-0587	8	Bolt-Flange-5X23
6	132-0591	1	Bolt-Flange-5X14
7	132-0657	1	Oil Seal-17X27X5
8	132-0667	1	O-Ring-21.2X2.4
9	132-0671	1	Collar-Top Cover

Crankcase Cover Assembly

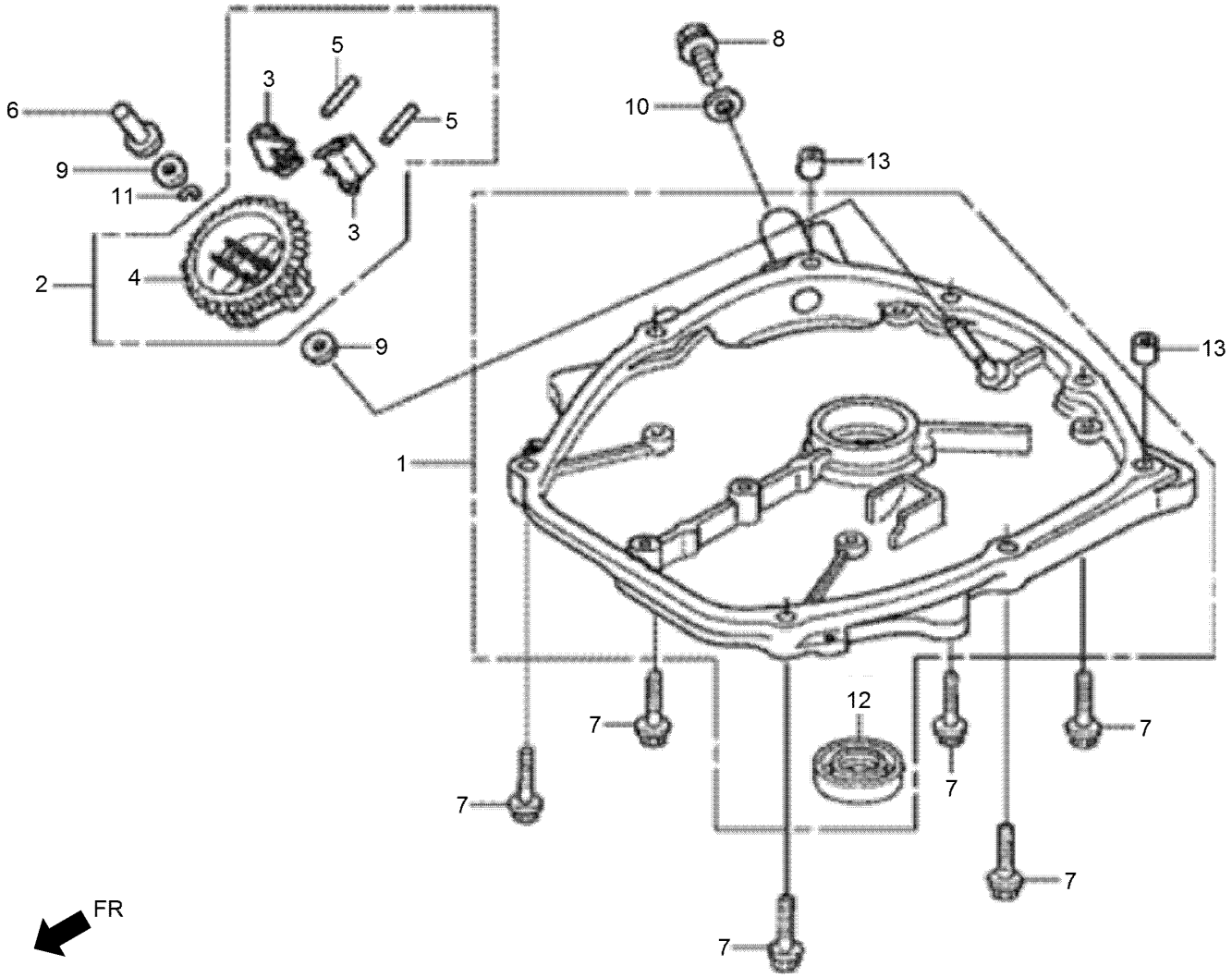

Crankcase Cover Assembly (continued)

Ref.	Part Number	Qty.	Description
1	132-0107	1	Crankcase Side Cover ASM
2	132-0298	1	Governor ASM
3	132-0300	2	Weight-Governor
4	132-0302	1	Holder-Governor Weight
5	132-0303	2	Pin-Governor Weight
6	132-0305	1	Slider-Governor
7	132-0587	6	Bolt-Flange-5X23
8	132-0621	1	Bolt-Drain Plug-12X15
9	132-0633	2	Washer-4.2X13
10	132-0638	1	Washer-Drain Plug-12Mm
11	132-0643	1	Clip-Governor Holder
12	132-0656	1	Oil Seal-18.9X28X5
13	132-0694	2	Dowel Pin-6X10

Crankshaft Assembly

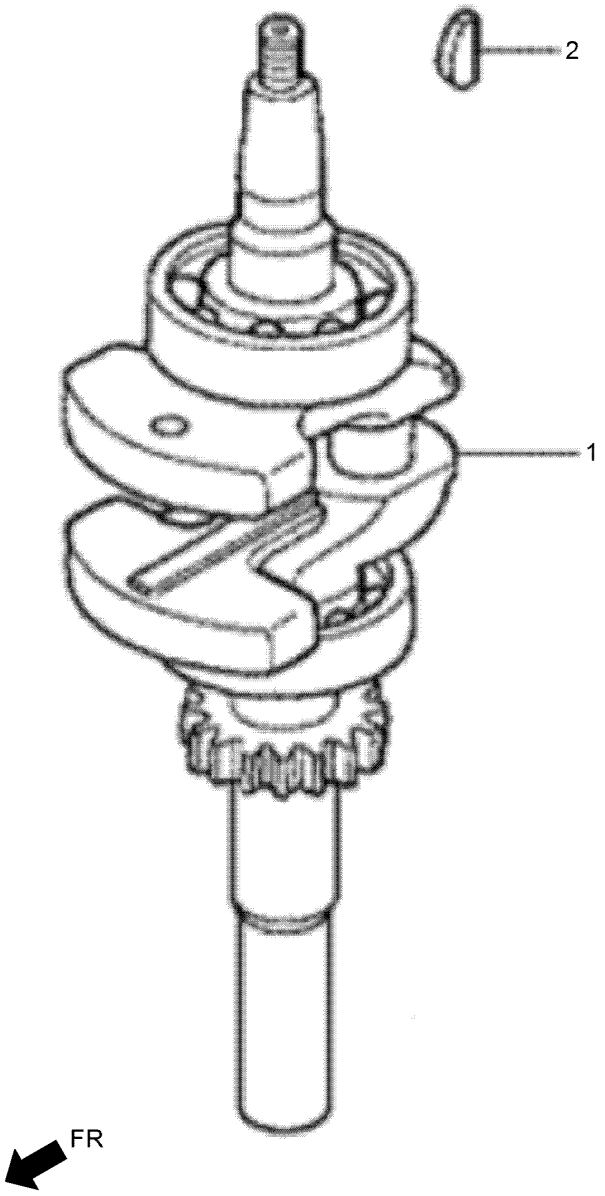

Crankshaft Assembly (continued)

Ref.	Part Number	Qty.	Description
1	132-0163	1	Crankshaft ASM
2	132-0169	1	Key-Special

Piston and Connecting Rod Assembly

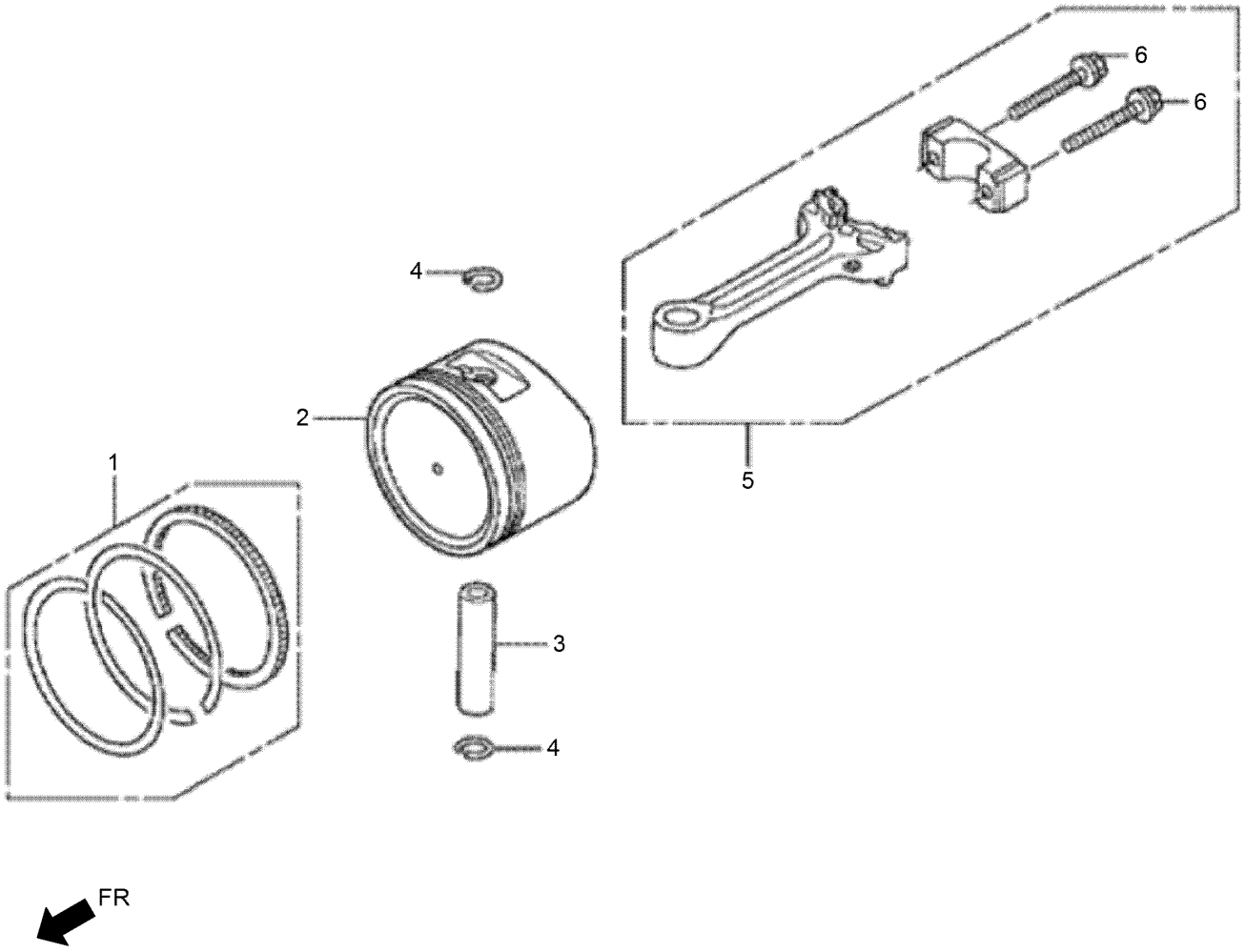

Piston and Connecting Rod Assembly (continued)

Ref.	Part Number	Qty.	Description
1	132-0141	1	Ring Set-Piston
2	132-0147	1	Piston
3	132-0148	1	Pin-Piston-10X33
4	132-0153	2	Clip-Piston Pin-10Mm
5	132-0159	1	Rod ASM-Connecting
6	132-0574	2	Bolt-Connecting Rod

Camshaft Assembly

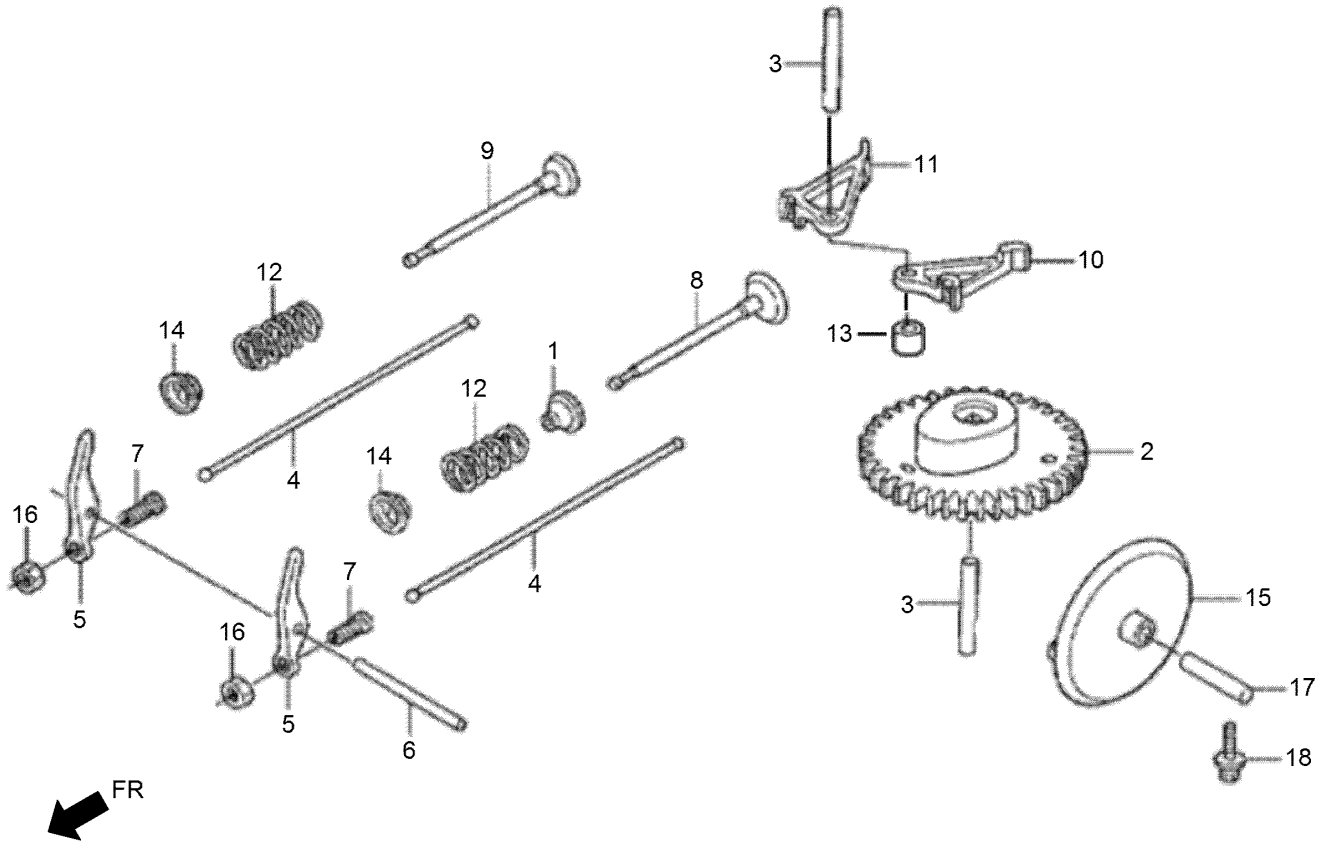

Camshaft Assembly (continued)

Ref.	Part Number	Qty.	Description
1	132-0123	1	Seal-Valve Stem
2	132-0171	1	Camshaft ASM
3	132-0173	2	Roller
4	132-0182	2	Rod-Push
5	132-0185	2	Arm-Valve Rocker
6	132-0186	1	Roller
7	132-0189	2	Pivot-Rocker Arm
8	132-0197	1	Valve-Intake
9	132-0202	1	Valve-Exhaust
10	132-0204	1	Lifter-Valve
11	132-0205	1	Lifter-Exhaust Valve
12	132-0208	2	Spring-Valve
13	132-0209	1	Collar-Lifter
14	132-0212	2	Retainer-Valve Spring
15	132-0217	1	Slinger-Oil
16	132-0628	2	Nut-Tappet Adjusting
17	132-0653	1	Roller-6X25
18	132-0674	1	Bolt-Washer-5X16

Recoil Starter Assembly

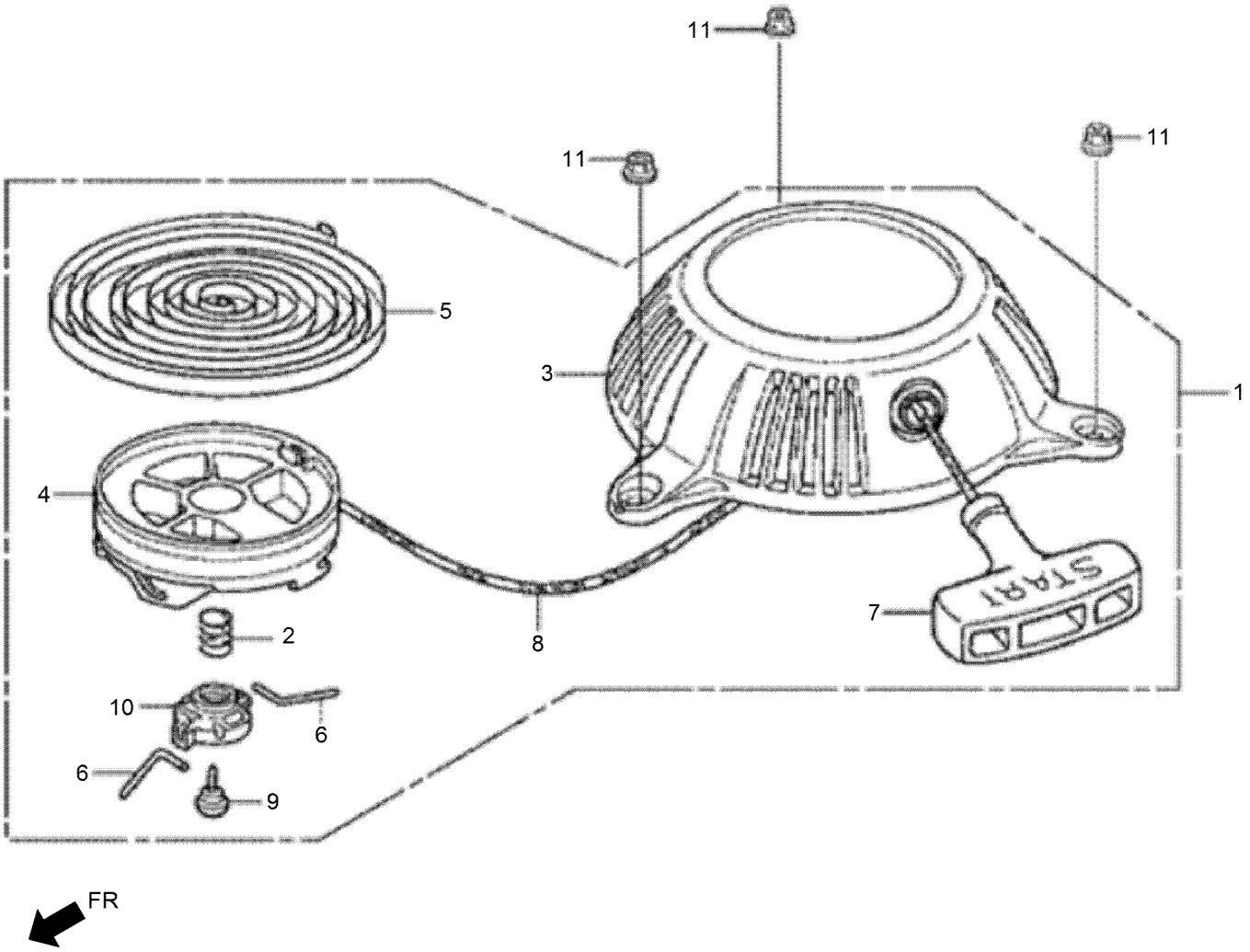

Recoil Starter Assembly (continued)

Ref.	Part Number	Qty.	Description
1	132-0482	1	Starter ASM-Recoil
2	132-0483	1	Spring-Friction
3	132-0488	1	Starter Case ASM
4	132-0490	1	Reel-Recoil Starter
5	132-0496	1	Spring-Recoil Starter
6	132-0501	2	Arm-Swing
7	132-0504	1	Knob-Recoil Starter
8	132-0506	1	Rope-Recoil Starter
9	132-0593	1	Screw-Setting
10	132-0673	1	Collar
11	132-0685	3	Nut-Flange-5Mm

Fan Cover Assembly

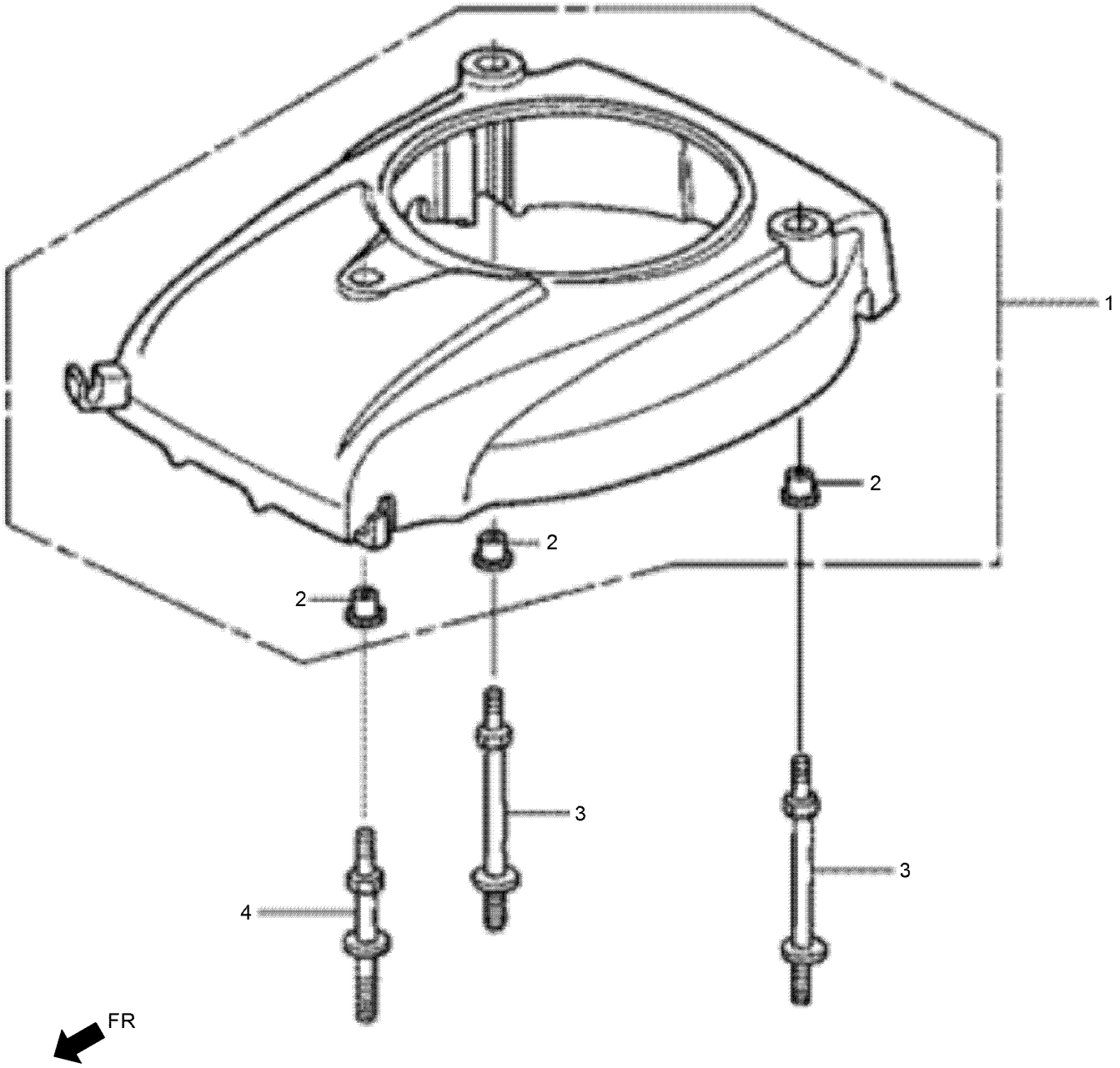

Fan Cover Assembly (continued)

Ref.	Part Number	Qty.	Description
1	132-0467	1	Fan Cover ASM (Nh1)
2	132-0472	3	Collar-Fan Cover
3	132-0610	2	Bolt A-Stud
4	132-0614	1	Bolt B-Stud

Carburetor Assembly

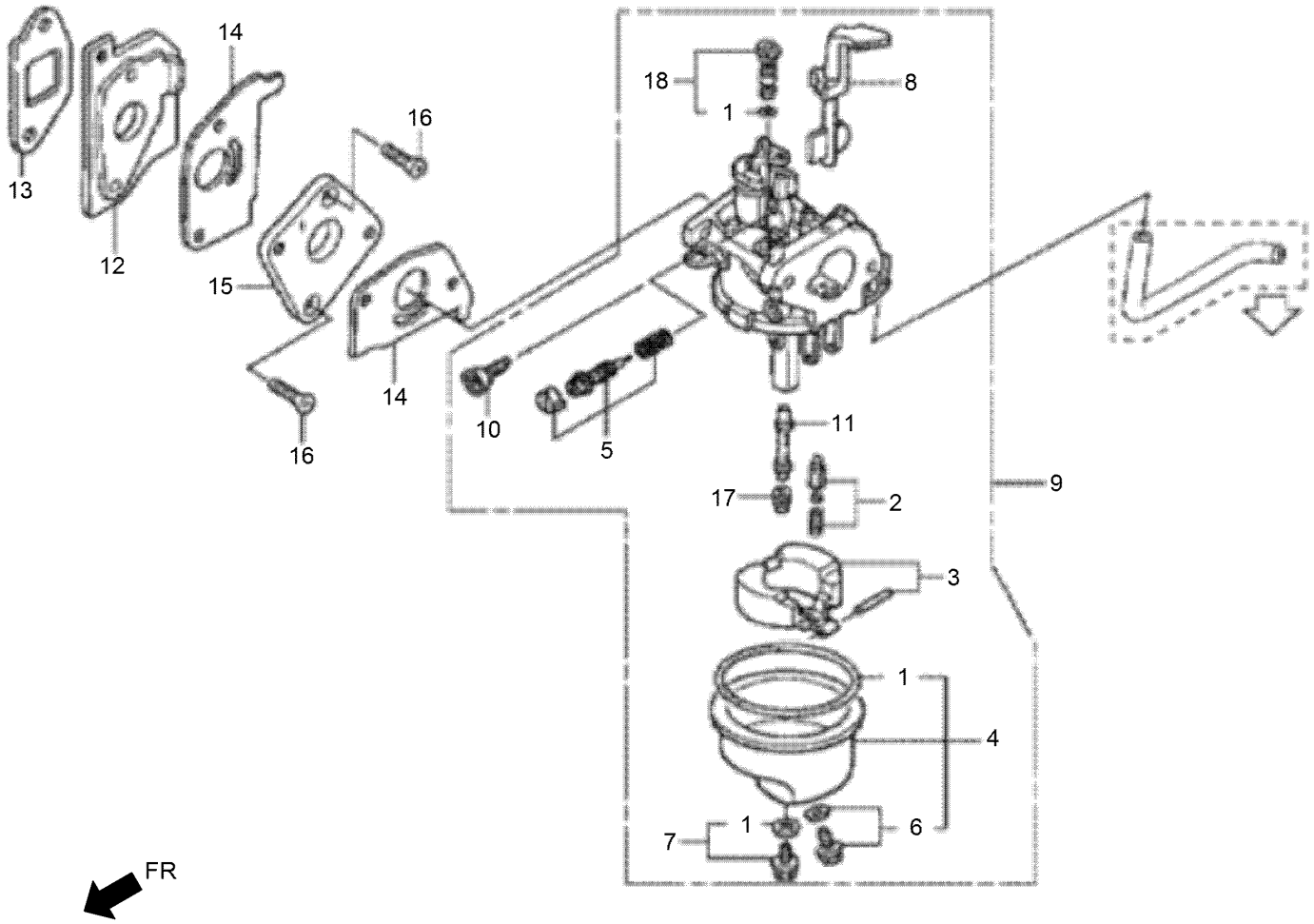

Carburetor Assembly (continued)

Ref.	Part Number	Qty.	Description
1	132-0240	1	Gasket Set
2	132-0241	1	Valve Set-Float
3	132-0243	1	Float Set
4	132-0248	1	Chamber Set-Float
5	132-0250	1	Screw Set-Pilot
6	132-0252	1	Screw Set-Drain
7	132-0255	1	Screw Set
8	132-0258	1	Choke Set
9	132-0266	1	Carburetor ASM
10	132-0268	1	Screw-Throttle Stop
11	132-0275	1	Nozzle-Main
12	132-0280	1	Insulator-Carburetor
13	132-0283	1	Packing-Insulator
14	132-0286	2	Packing-Carburetor
15	132-0288	1	Plate-Carburetor Joint
16	132-0680	2	Screw-Flat-5X20
17	131-8236	1	Jet-Main No. 52
18	131-8238	1	Jet Set-Pilot, No. 35

Air Cleaner Assembly

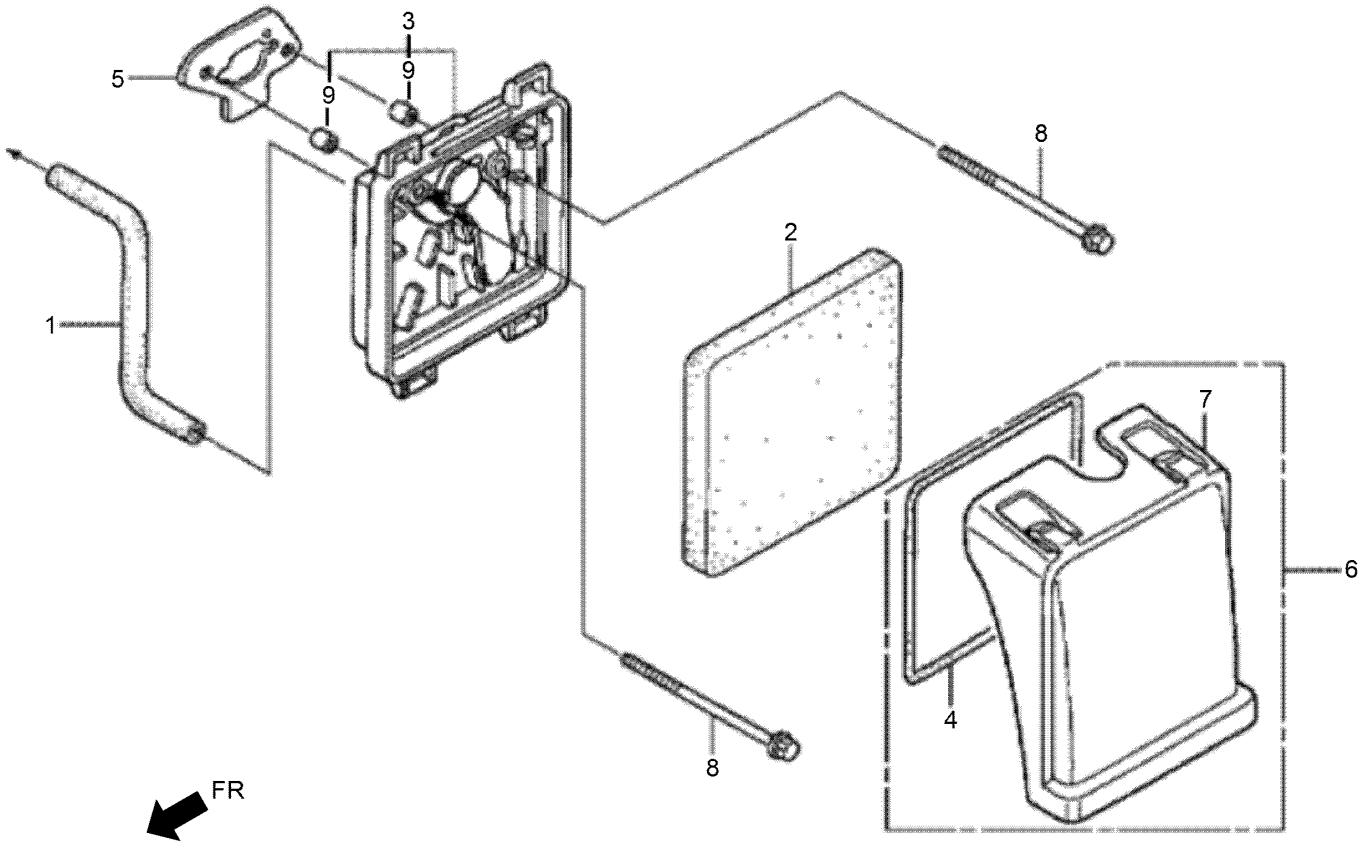

Air Cleaner Assembly (continued)

Ref.	Part Number	Qty.	Description
1	132-0237	1	Tube-Breather
2	132-0371	1	Element-Air Cleaner
3	132-0378	1	Air Cleaner Case ASM
4	132-0379	1	Seal-Air Cleaner
5	132-0382	1	Packing-Air Cleaner
6	132-0384	1	Air Cleaner Cover ASM
7	132-0390	1	Cover-Air Cleaner
8	132-0585	2	Bolt-Flange-5X65
9	132-0672	2	Collar-Air Cleaner

Muffler Assembly

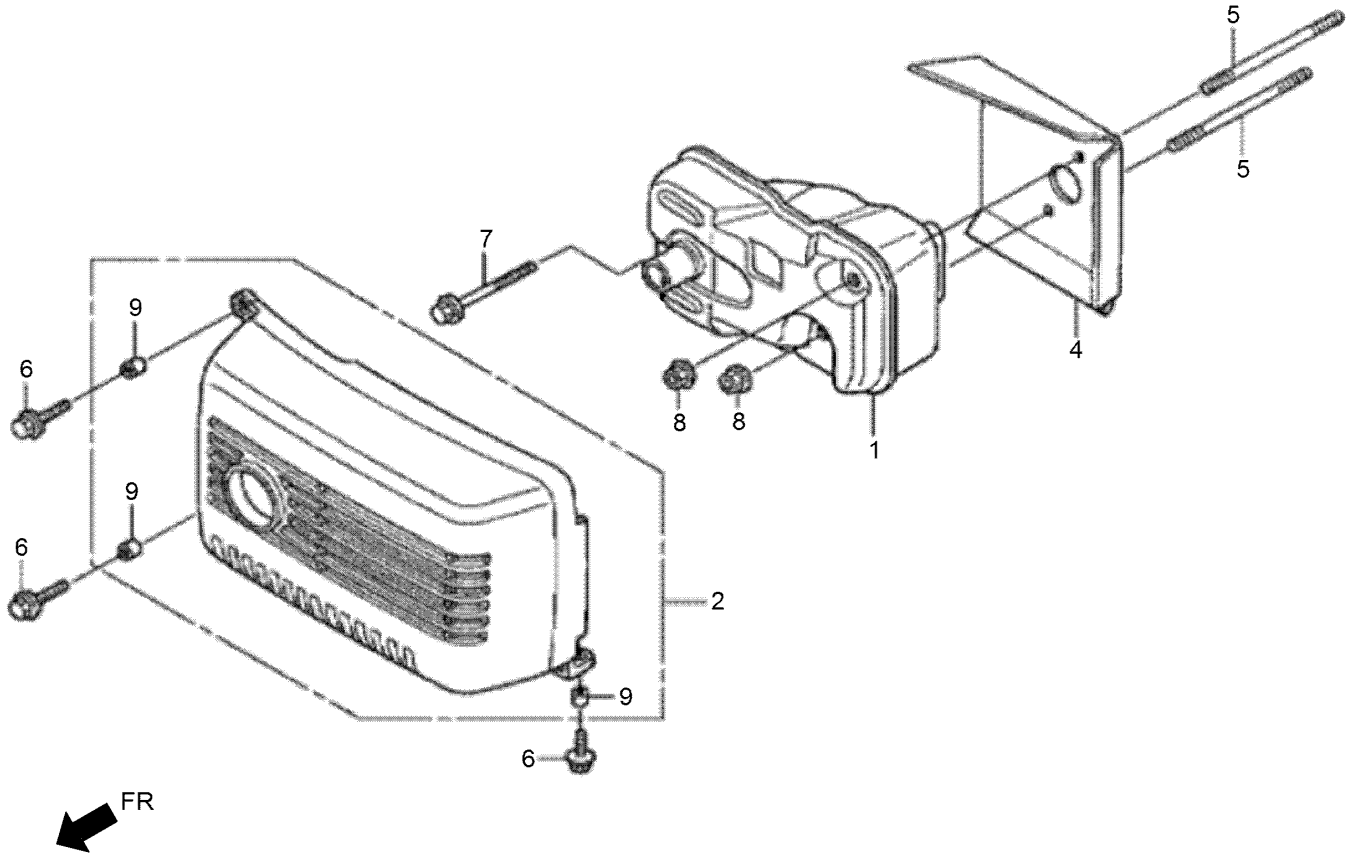

Muffler Assembly (continued)

Ref.	Part Number	Qty.	Description
1	132-0447	1	Muffler ASM
2	132-0454	1	Muffler Protector ASM
4	132-0459	1	Guide-Air
5	132-0575	2	Bolt-Stud-5X55
6	132-0590	3	Bolt-Flange-5X16
7	132-0618	1	Bolt-Flange-5X35
8	132-0623	2	Nut-Self-Lock-5Mm
9	132-0671	3	Collar-Top Cover

Fuel Tank Assembly

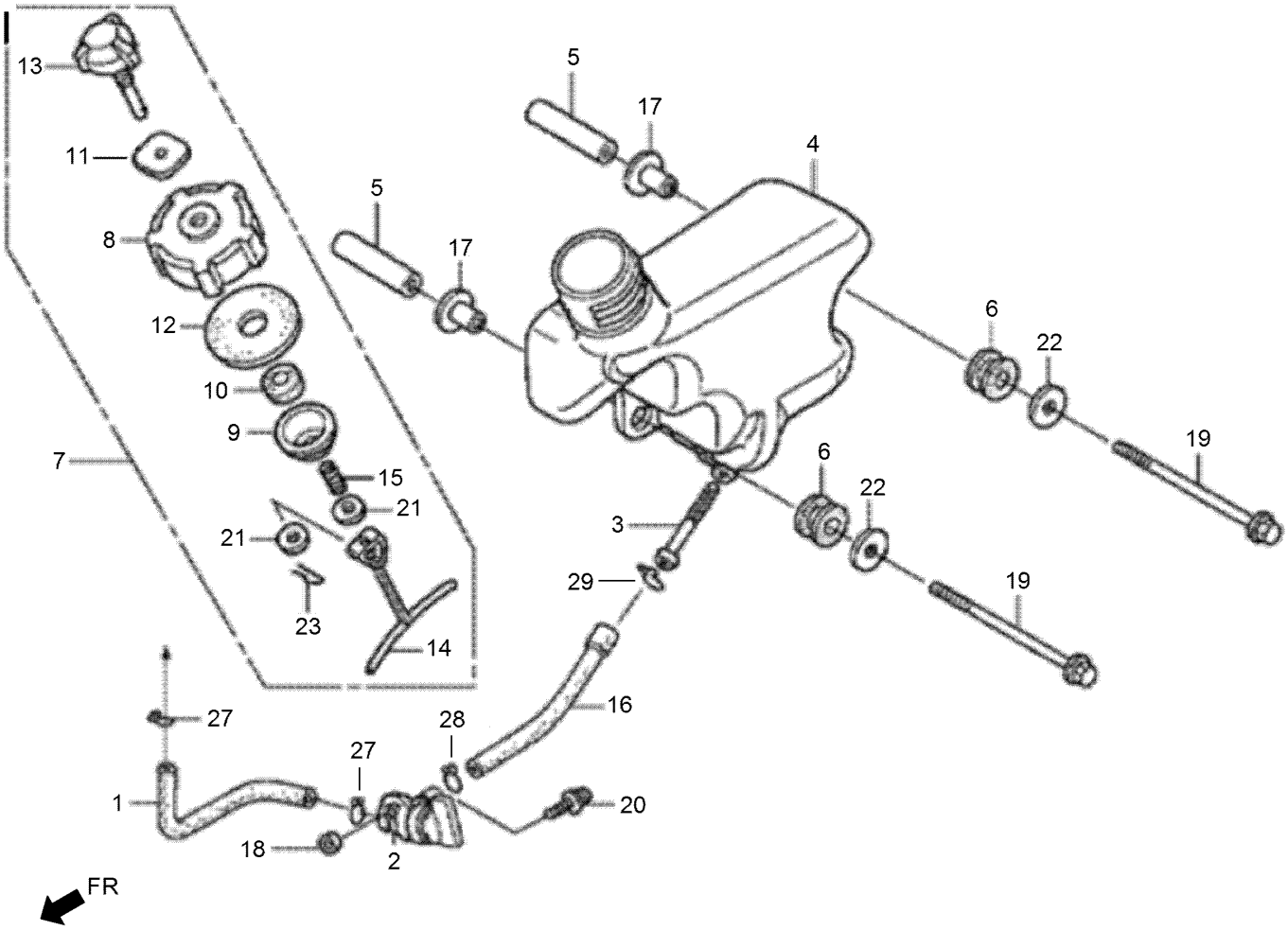

Fuel Tank Assembly (continued)

Ref.	Part Number	Qty.	Description
1	132-0350	1	Tube B-Fuel
2	132-0355	1	Cock ASM-Fuel
3	132-0358	1	Strainer-Fuel
4	132-0400	1	Tank-Fuel
5	132-0405	2	Collar-Tank Setting
6	132-0407	2	Rubber A-Tank Mounting
7	132-0417	1	Cap ASM-Fuel Tank
8	132-0419	1	Body-Fuel Cap
9	132-0421	1	Inner-Fuel Cap
10	132-0422	1	Sponge-Fuel Cap Breather
11	132-0424	1	Packing-Valve
12	132-0426	1	Packing-Fuel Cap
13	132-0428	1	Breather Valve ASM
14	132-0429	1	Link-Fuel Cap
15	132-0430	1	Spring-Fuel Cap
16	132-0435	1	Tube-Fuel
17	132-0460	2	Collar-Canister Mounting
18	132-0527	1	Collar-Fr Winker
19	132-0599	2	Bolt-Flange-6X65
20	132-0681	1	Screw-Washer-5X10
21	132-0687	2	Washer-Plain-4Mm
22	132-0690	2	Washer-Plain-6Mm
23	132-0691	1	Pin-Lock-4Mm
27	131-8211	2	Clamp-Tube
28	131-8212	1	Clamp-Tube
29	131-8213	1	Clamp-Tube

Flywheel and Ignition Coil Assembly

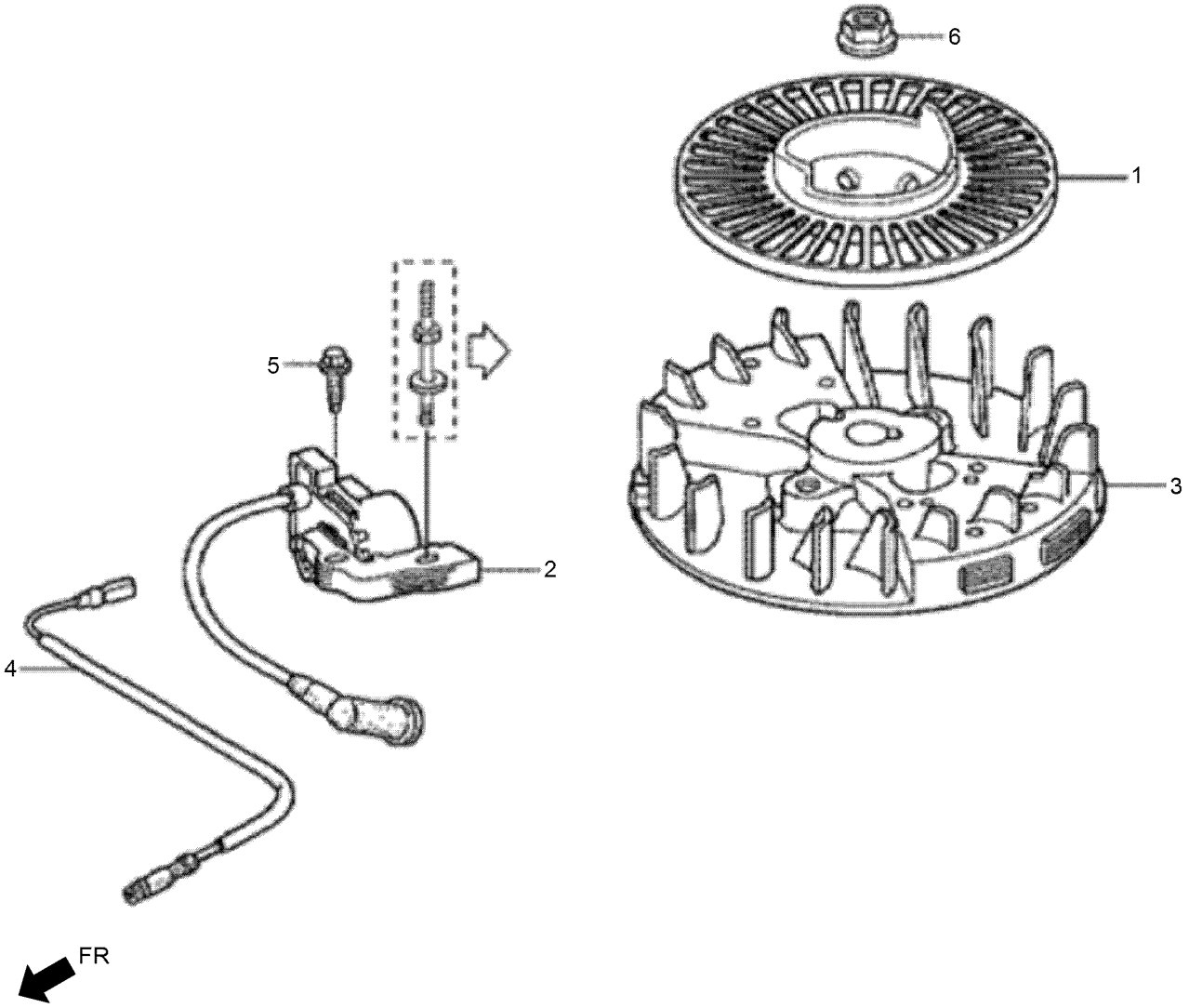

Flywheel and Ignition Coil Assembly (continued)

Ref.	Part Number	Qty.	Description
1	132-0498	1	Starter Pulley ASM
2	132-0514	1	Coil ASM-Ignition
3	132-0520	1	Flywheel ASM
4	132-0526	1	Cord-Stop Switch
5	132-0582	1	Bolt-Flange-5X20
6	132-0686	1	Nut-Flange-10Mm

Control Assembly

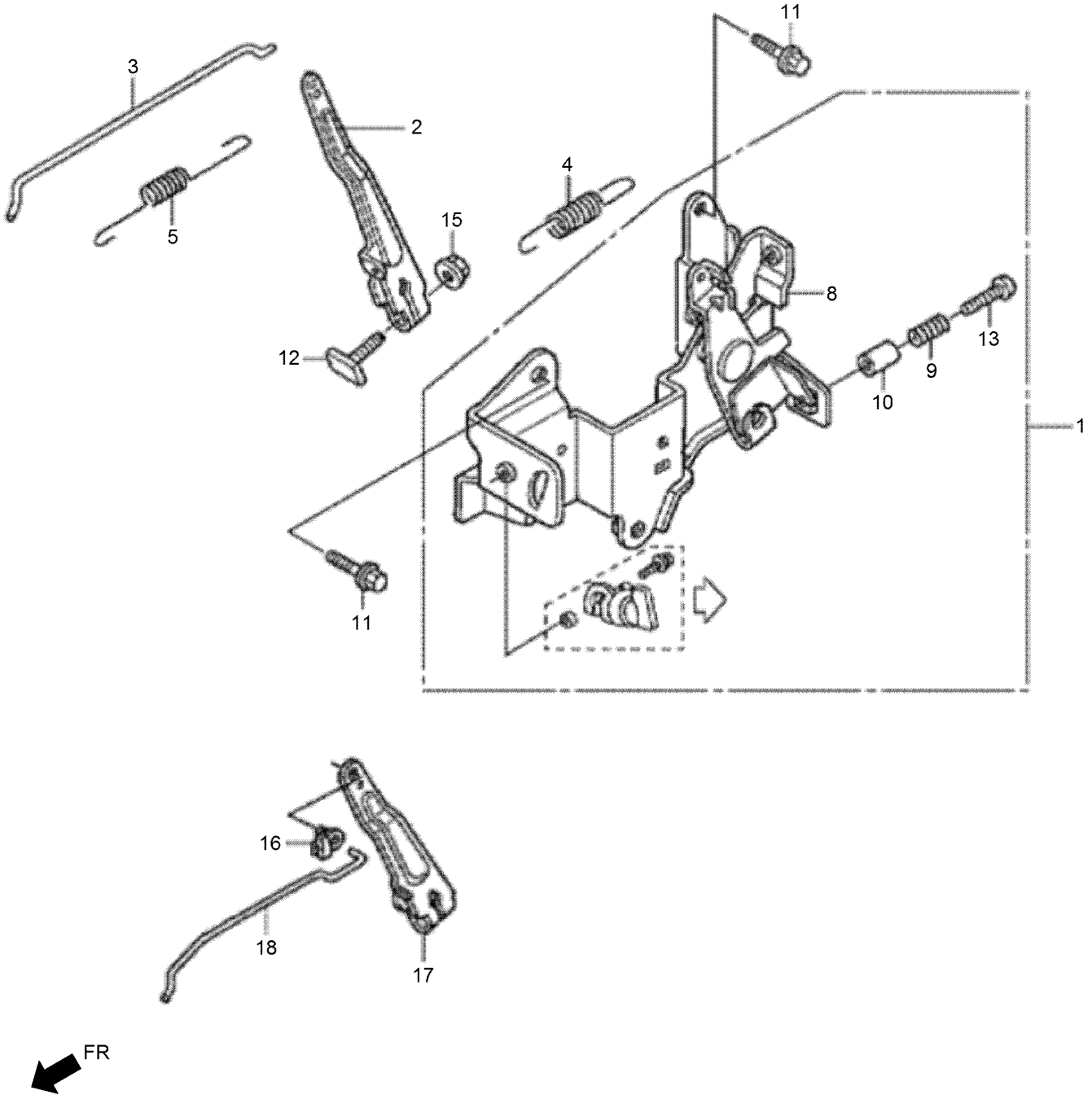

Control Assembly (continued)

Ref.	Part Number	Qty.	Description
1	132-0293	1	Control ASM
2	132-0313	1	Arm-Governor (To S/N 1000526)
3	132-0319	1	Rod-Governor (To S/N 1000526)
4	132-0323	1	Spring-Governor
5	132-0327	1	Spring-Throttle Return
8	132-0339	1	Control Base ASM
9	132-0340	1	Spring-Control Adjusting
10	132-0342	1	Collar-Stopper
11	132-0577	2	Bolt-Flange-5X12
12	132-0597	1	Bolt-Governor Arm
13	132-0601	1	Screw-Recessed-5X28
15	132-4881	1	Nut-Flange-6Mm
16	132-0290	1	Joint-Rod (From S/N 1000527)
17	132-0310	1	Arm-Governor (From S/N 1000527)
18	132-0314	1	Rod-Governor (From S/N 1000527)

Label Assembly

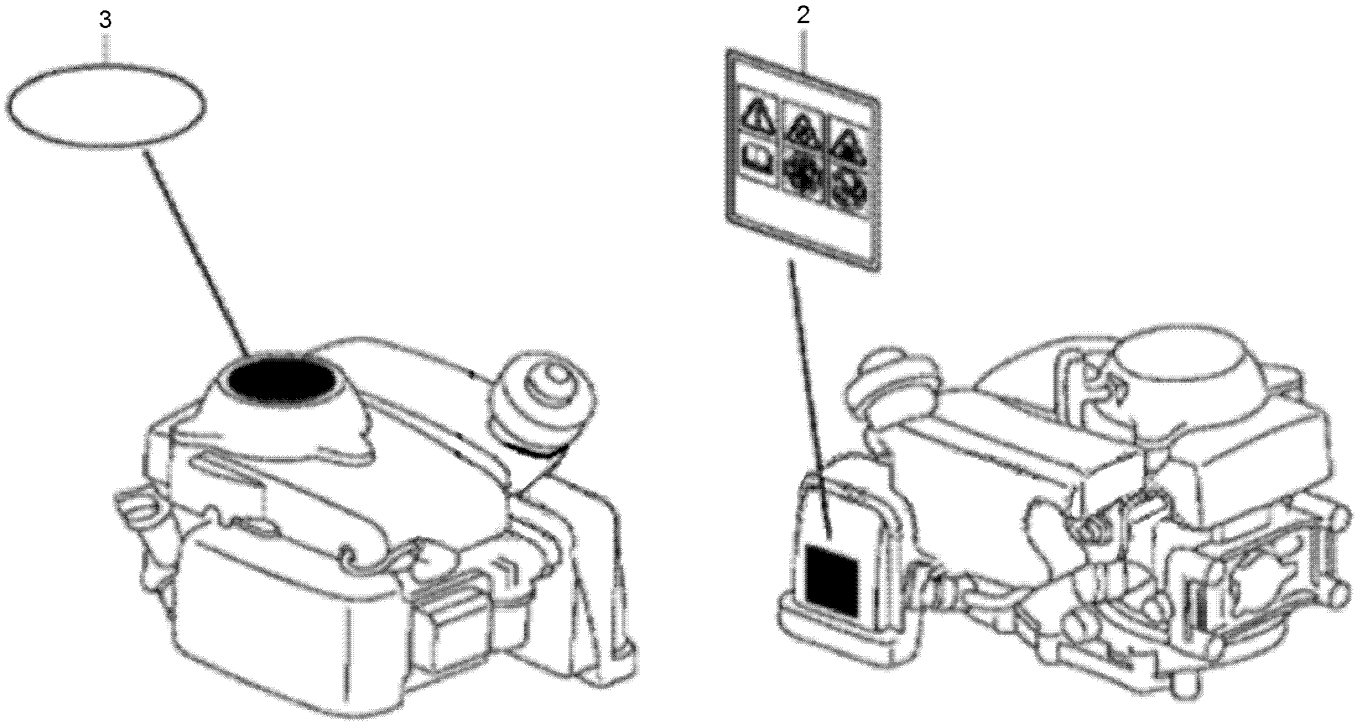

Label Assembly (continued)

Ref.	Part Number	Qty.	Description
2	132-0560	1	Mark-Operator Caution
3	132-0563	1	Emblem

Decal Assembly

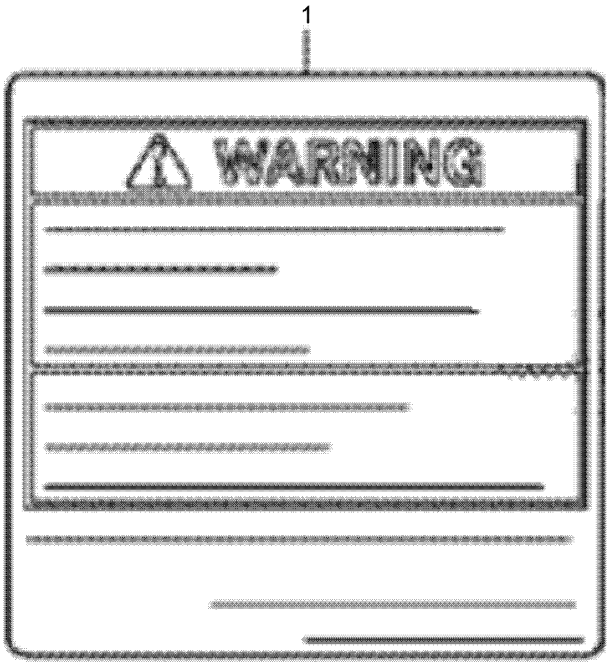

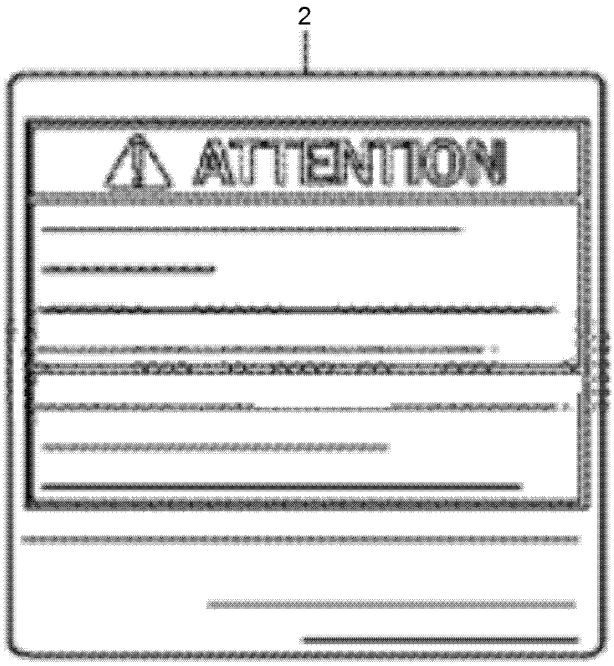

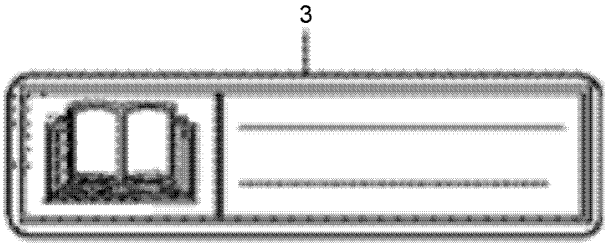

Decal Assembly (continued)

Ref.	Part Number	Qty.	Description
1	132-0555	1	Mark-Operator Caution (English)
2	132-0556	1	Mark-Operator Caution (French)
3	132-0564	1	Label-Caution

Handle Assembly

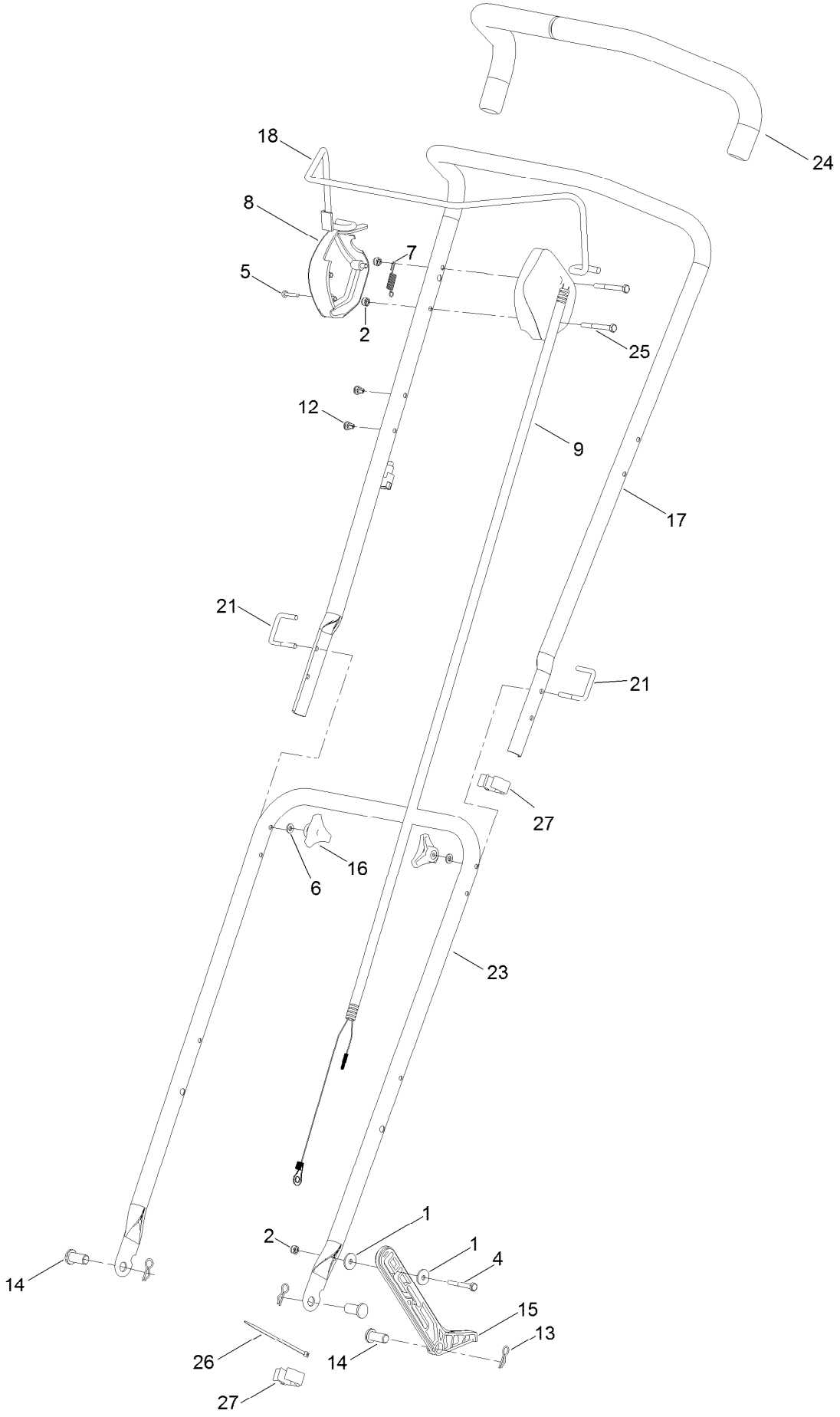

Handle Assembly (continued)

Ref.	Part Number	Qty.	Description
1	09263	2	Washer
2	09438	3	Nut-Nyloc
4	09568	1	Bolt-HH
5	09765	3	Screw-Plastite
6	111-7679	2	Washer-Plain
7	111-1773	1	Spring-Return
8	111-1816	1	Box-Switch, LH
9	111-7264	1	OPC Wire Loom ASM
12	341033	2	Fastener-Drive
13	H192040	3	Clip-R
14	H192169	3	Pin-Retaining
15	111-7262	1	Footstop
16	H192204	2	Handwheel
17	H290237	1	Handle-Upper
18	H290239	1	Arm-Bail
21	H292026	2	Bolt-U
23	111-7263-03	1	Handle-Lower
24	H292276	2	Grip-Handle
25	H292309	2	Bolt-Hex
26	HY3966	1	Tie-Cable
27	HY412008	2	Guide-Cable

Attachments and Accessories

For 02615 HoverPro 400 Machine

Product Name	Model/Part
High-Rise Kit	02620

Notes:

TORO®

Count on it.