Form No. 3425-248 Rev A

TORO®

Count on it.

Operator's Manual

Aerator 686 and 687

Model No. 44856—Serial No. 402900001 and Up

Model No. 44867—Serial No. 402900001 and Up

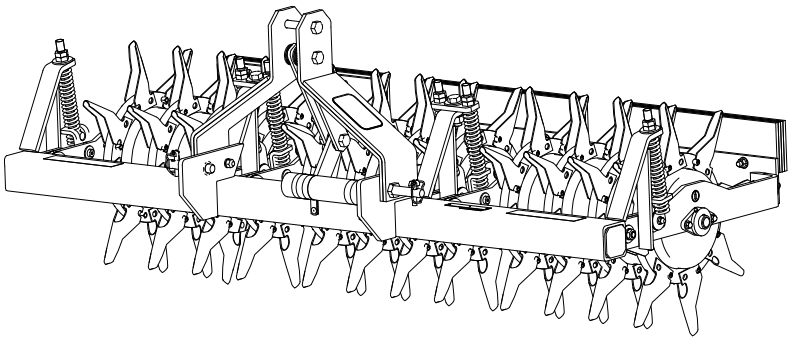

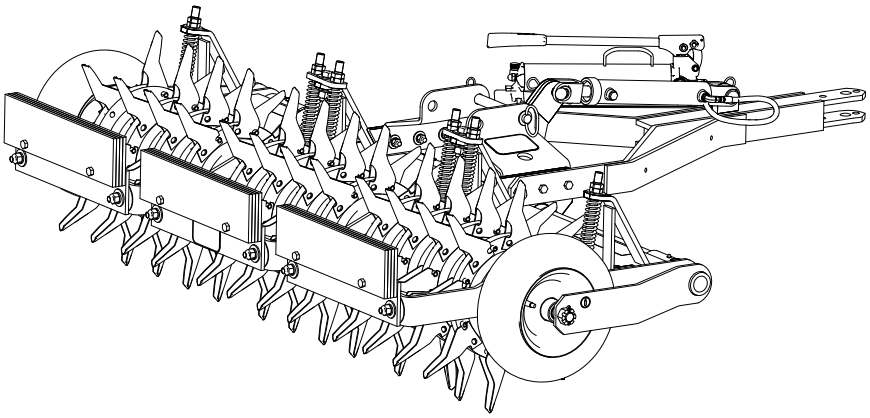

Register at www.Toro.com.
Original Instructions (EN)

CE

3425-248 A

This product complies with all relevant European directives when CE Kit 95-3350 is installed; for details, please see the separate product specific Declaration of Conformity (DOC) sheet.

The DOT tire information is located on the side of each tire. This information gives load and speed ratings. Replacement tires should have the same or better ratings. Refer to Specifications to ensure that the tires meet or exceed the weight requirements of your machine.

⚠ WARNING

CALIFORNIA
Proposition 65 Warning

Use of this product may cause exposure to chemicals known to the State of California to cause cancer, birth defects, or other reproductive harm.

Introduction

This aerator is intended to be used by trained operators in residential and commercial applications. It is primarily designed for aerating areas of well-maintained lawns on residential grounds, parks, sports fields, and on commercial grounds.

Read this information carefully to learn how to operate and maintain your product properly and to avoid injury and product damage. You are responsible for operating the product properly and safely.

Visit www.Toro.com for product safety and operation training materials, accessory information, help finding a dealer, or to register your product.

Whenever you need service, genuine Toro parts, or additional information, contact an Authorized Service Dealer or Toro Customer Service and have the model and serial numbers of your product ready. Figure 1 identifies the location of the model and serial numbers on the product. Write the numbers in the space provided.

Important: **With your mobile device, you can scan the QR code (if equipped) on the serial number plate to access warranty, parts, and other product information.**

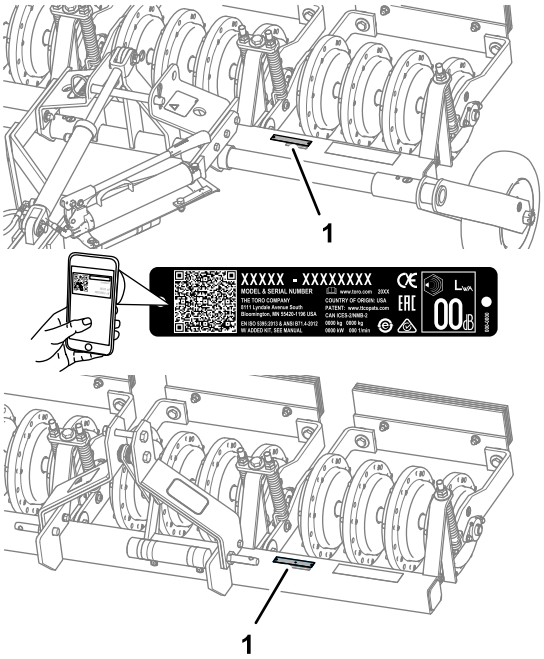

Figure 1

1. Model and serial number location

Model No.	_____
Serial No.	_____

This manual identifies potential hazards and has safety messages identified by the safety-alert symbol (Figure 2), which signals a hazard that may cause serious injury or death if you do not follow the recommended precautions.

g000502

Figure 2

1. Safety-alert symbol

This manual uses 2 words to highlight information. **Important** calls attention to special mechanical information and **Note** emphasizes general information worthy of special attention.

© 2018—The Toro® Company
8111 Lyndale Avenue South
Bloomington, MN 55420

Contact us at www.Toro.com.
Printed in the USA
All Rights Reserved

Contents

Safety 3
General Safety 3
Safety and Instructional Decals 4
Setup 5
1 Installing the Wheels 6
2 Installing the Weights 6
3 Mounting the Tongue Assembly 6
4 Attaching the Pump and Cylinder Assembly 8
Product Overview 9
Specifications 9
Attachments/Accessories 9
Operation 10
Assembling the Aerator to the Traction Unit 10
Installing the Tines 12
Using the Aerator 12
Maintenance 14
Recommended Maintenance Schedule(s) 14
Lubrication 14
Lubricating the Bearings 14
Chassis Maintenance 15
Checking Tire Air Pressure 15
Checking the Main Arms Bushings 15
Adjusting the Springs 16
Checking the Tines 16
Storage 17

Safety

General Safety

- Read and understand the contents of the *Operator's Manual* for both the aerator and the traction unit.
- Train all operators and service personnel on the aerator.
- Raise the tines, slow down, and use caution when crossing surfaces other than grass and when transporting the machine.
- Do not operate the machine when ill, tired, or under the influence of alcohol or drugs.
- Use extreme care when loading or unloading the aerator into a trailer or truck.
- Operate the aerator at a lower speed when you are on a slope.
- Do not use the aerator near drop-offs, ditches, embankments, or bodies of water. The aerator could suddenly roll over if a wheel goes off the edge.
- Stop the traction unit, raise the tines (aerator model 44867), shut off the engine, engage the parking brake, remove the key, and wait for all movement to stop before adjusting, cleaning, or repairing the aerator.
- Always wear gloves when servicing the tines. Replace damaged tines.
- Do not put hands or feet near moving components of the machine.

Improperly using or maintaining this machine can result in injury. To reduce the potential for injury, comply with these safety instructions and always pay attention to the safety-alert symbol ⚠, which means Caution, Warning, or Danger—personal safety instruction. Failure to comply with these instructions may result in personal injury or death.

You can find additional safety information where needed throughout this manual.

Safety and Instructional Decals

Safety decals and instructions are easily visible to the operator and are located near any area of potential danger. Replace any decal that is damaged or missing.

decal106-0229

106-0229

1. Warning—remove the key from the ignition and read the *Operator's Manual* before performing maintenance.
2. Cutting/severing hazard of hand; cutting/severing hazard of foot.

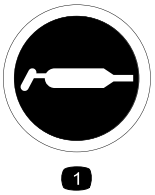

decal58-6520

58-6520

1. Grease

---

decal133-8061

133-8061

Setup

Loose Parts

Use the chart below to verify that all parts have been shipped.

Procedure	Description	Qty.	Use
1	Wheel assembly Spacer Axle Slotted nut Cotter pin	2 4 2 2 2	Install the wheels.
2	Weight Bolt (1/2 x 2-3/4 inch) Flanged locknut (1/2 inch)	12 6 6	Install the weights.
3	Tongue assembly Bracket Bolt (1/2 x 2-1/2 inch) Nut (1/2 inch) Washer (1/2 inch) Lock washer (1/2 inch) Lock pin Hairpin cotter pin (small)	1 2 6 6 6 6 1 1	Mount the tongue assembly.
4	Pump and cylinder assembly Screw (3/8 x 1-1/4 inch) Washer (3/8 inch) Locknut (3/8 inch) Screw (1/2 x 1-1/4 inch) Nut (1/2 inch) Lock washer (1/2 inch) Vibration strap Cylinder pin Hairpin cotter pin (large)	1 2 2 2 1 1 1 1 2 2	Attach the pump and cylinder assembly.

Media and Additional Parts

Description	Qty.	Use
Operator's Manual	1	Read before operating the machine.

Determine the left and right sides of the machine from the normal operating position.

1

Installing the Wheels

Model 44856

Parts needed for this procedure:

2	Wheel assembly
4	Spacer
2	Axle
2	Slotted nut
2	Cotter pin

Procedure

1. Position the wheel assembly and 2 spacers (1 on each side of the wheel hub) between the frame as shown in Figure 3.

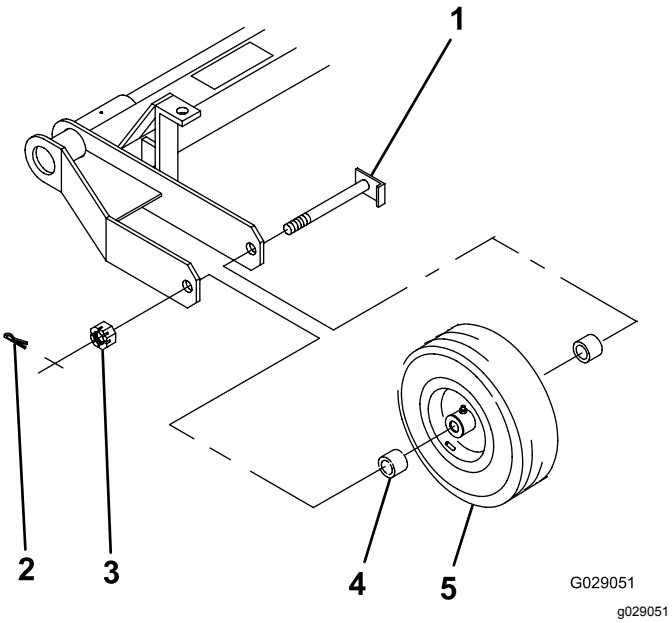

Figure 3

1. Axle
2. Cotter pin
3. Slotted nut
4. Wheel spacer
5. Wheel assembly

2. Insert the axle through the frame, spacers, and wheel (Figure 3).
3. Thread the slotted nut onto the axle (Figure 3) and tighten it with a hand wrench to 8 to 20 N·m (75 to 180 in-lb).
4. Rotate the wheel to seat the bearings and remove end play.
5. Loosen the castle nut until it separates from the frame, and the wheel hub has end play.
6. Tighten the slotted nut to 1.5 to 2 N·m (15 to 20 in-lb) while rotating the wheel.

   Note: If the cotter pin hole in the axle shaft is misaligned with a slot in the nut, loosen the nut until the hole and slot aligns.
7. Install the cotter pin (Figure 3).
8. Grease the wheel bearings until the wheel hub cavity is completely full and you see slight leakage at the seals.

2

Installing the Weights

Parts needed for this procedure:

12	Weight
6	Bolt (1/2 x 2-3/4 inch)
6	Flanged locknut (1/2 inch)

Procedure

Install the weights as shown in Figure 4.

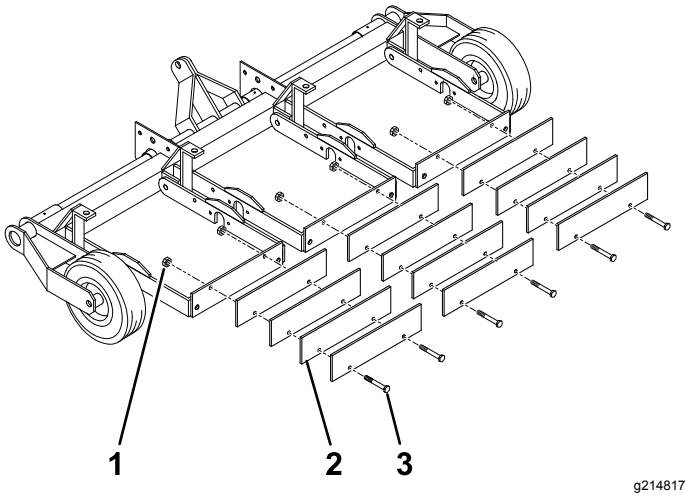

Figure 4

1. Flanged locknut (1/2 inch)
2. Weight
3. Bolt (1/2 x 2-3/4 inch)

3

Mounting the Tongue Assembly

Model 44856

Parts needed for this procedure:

1	Tongue assembly
2	Bracket
6	Bolt (1/2 x 2-1/2 inch)
6	Nut (1/2 inch)
6	Washer (1/2 inch)
6	Lock washer (1/2 inch)
1	Lock pin
1	Hairpin cotter pin (small)

Procedure

1. Remove the brackets, lock pin, and hardware from the tongue attachment points of the aerator.
2. Align the tongue assembly with the aerator as shown in Figure 5.

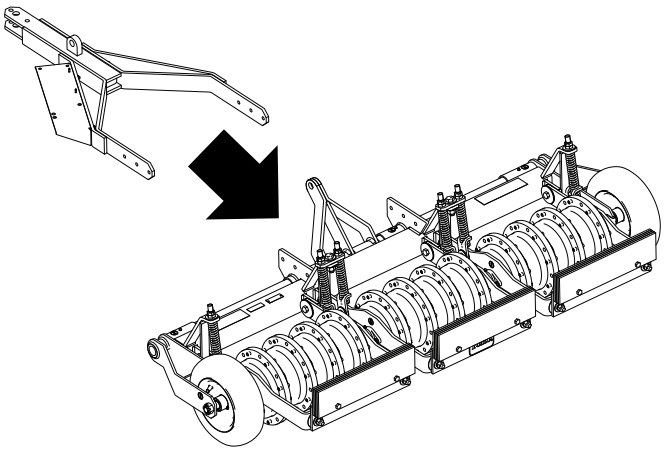

g216322

Figure 5

3. Align the brackets on the aerator as shown in Figure 6.

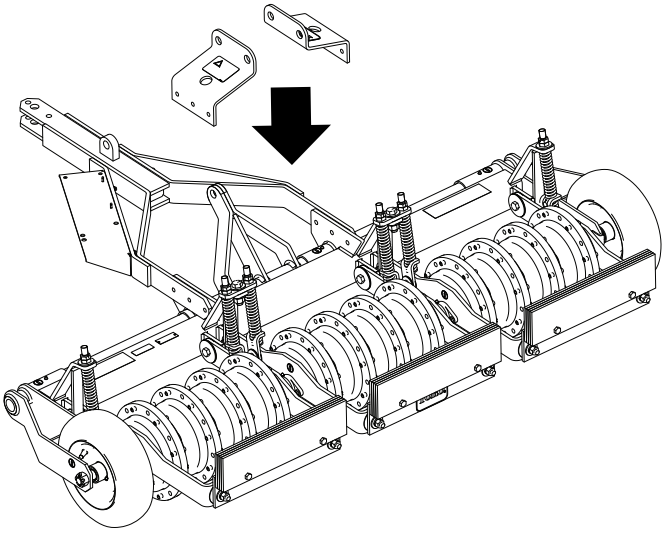

g216319

Figure 6

4. Secure the tongue assembly and the brackets with the hardware as shown in Figure 7 and torque the nuts to 54 to 74 N·m (67-83 ft-lb).

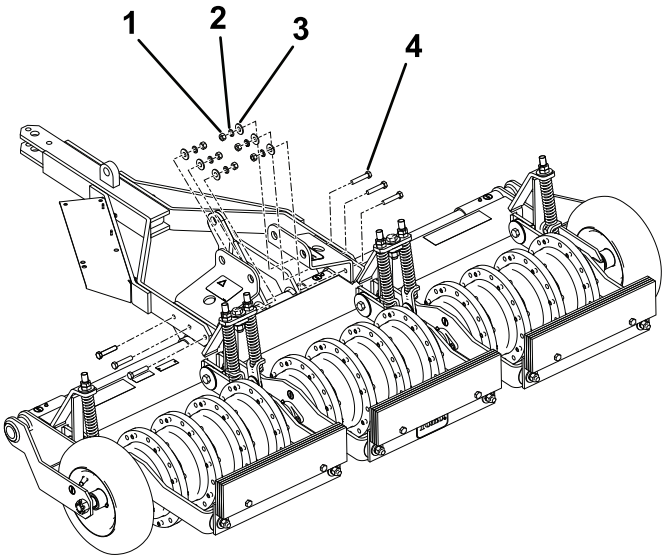

g216320

Figure 7

1. Nut (1/2 inch)
2. Lock washer (1/2 inch)
3. Washer (1/2 inch)
4. Bolt (1/2 x 2-1/2 inch)

5. Install the lock pin and secure it with the small hairpin cotter as shown in Figure 8.

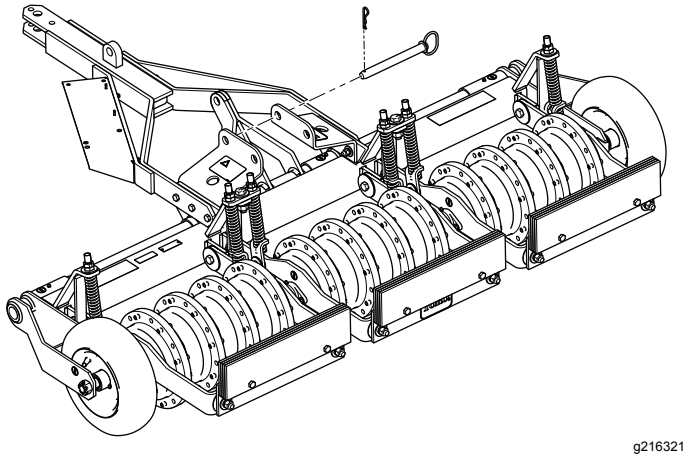

Figure 8

4

Attaching the Pump and Cylinder Assembly

Model 44856

Parts needed for this procedure:

1	Pump and cylinder assembly
2	Screw (3/8 x 1-1/4 inch)
2	Washer (3/8 inch)
2	Locknut (3/8 inch)
1	Screw (1/2 x 1-1/4 inch)
1	Nut (1/2 inch)
1	Lock washer (1/2 inch)
1	Vibration strap
2	Cylinder pin
2	Hairpin cotter pin (large)

Procedure

Note: Do not kink or pinch the hydraulic hose.

Align the pump and cylinder assembly and secure them as shown in Figure 9.

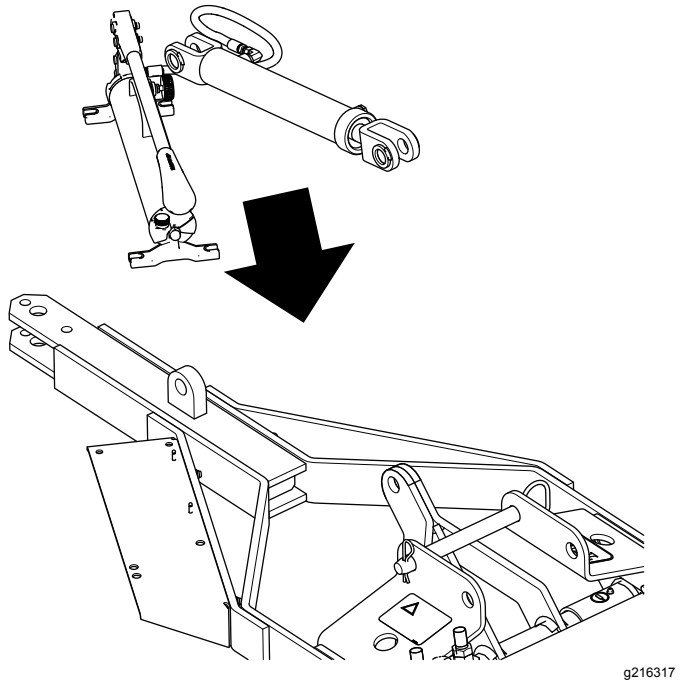

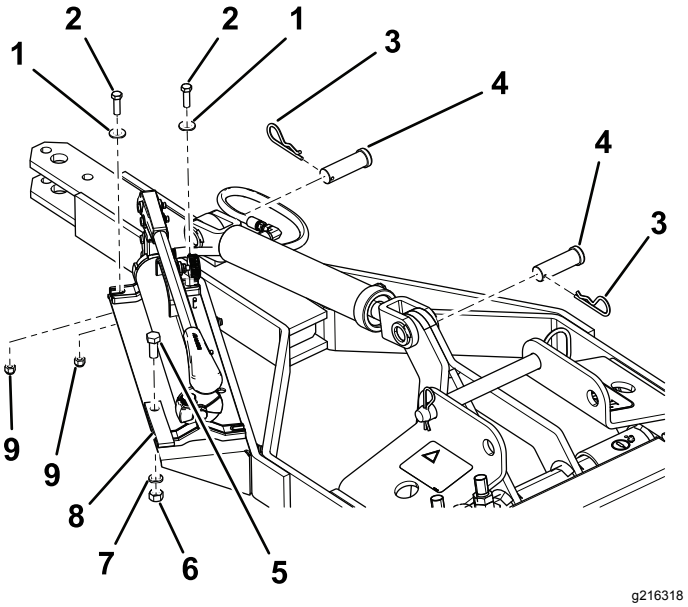

Figure 9

1. Washer (3/8 inch)
2. Screw (3/8 x 1-1/4 inch)
3. Hairpin cotter (large)
4. Cylinder pin
5. Screw (1/2 x 1-1/4 inch)
6. Nut (1/2 inch)
7. Lock washer (1/2 inch)
8. Vibration strap
9. Locknut (3/8 inch)

Product Overview

Specifications

Frame	Welded tubular steel; divided into 3 sections, each section moves horizontally and diagonally to follow contour, spring loaded
Aerating wheels	12 castings, 70 lb, 4 per section, with permanent roll pin every other hole
Shaft	1-1/4 inch, machined to 1 inch
Tines	96, 8 per wheel, secured with 1 bolt, roll pin in wheel secures second hole in tine; 1/2 or 3/4 inch open or closed, 4 inch slicing blades are available
Bearings	Self sealed, self aligned
Transport tires (Model 44856 only)	4.80 x 8 — 2 ply
Hitch	Drop pin (Model 44856) 3 point—Category 1 tractor type (Model 44867)
Lift mechanism (Model 44856 only)	Hand hydraulic pump to a 10 inch stroke cylinder. Hydraulic fluid required is Mobil DTE 15 M or equivalent
Springs	6 to assist down pressure on tines
Aerating swath	2 m (78 inches)
Pattern	15 cm (6 inches) on center
Operating speed	1 to 16 km/h (1 to 10 mph), depending on conditions
Overall width	2.2 m (90 inches) (Model 44856)
	2 m (82 inches) (Model 44867)
Weight	674 kg (1,485 lb) (Model 44856)
	569 kg (1,255 lb) (Model 44867)

Attachments/Accessories

A selection of Toro approved attachments and accessories is available for use with the machine to enhance and expand its capabilities. Contact your Authorized Service Dealer or authorized Toro distributor or go to www.Toro.com for a list of all approved attachments and accessories.

To ensure optimum performance and continued safety certification of the machine, use only genuine Toro replacement parts and accessories. Replacement parts and accessories made by other manufacturers could be dangerous, and such use could void the product warranty.

Operation

Note: Determine the left and right sides of the traction unit from the normal operating position.

Assembling the Aerator to the Traction Unit

Preparing the Traction Unit

1. Park the traction unit on a level surface, shut off the engine, engage the parking brake, remove the key, and wait for all movement to stop before leaving the machine.
2. Visually inspect the traction unit for any loose hardware or any other possible problems. Tighten loose hardware and correct any problems before operating.

Attaching Aerator

Model 44856

Attach the hitch of the aerator to the tongue of the traction unit using the hardware of the traction unit.

Important: **Do not lift the tongue by hand. Use the tongue jack or powered lift to align the hitch to the traction unit.**

1. Check the tire air pressure; refer to Checking Tire Air Pressure (page 15).
2. Lower the 3-point hitch; refer to the operator's manual for your traction unit.
3. If installed, remove the lynch pin, clevis pin, and upper 3-point link from the upper-link bracket (Figure 10).

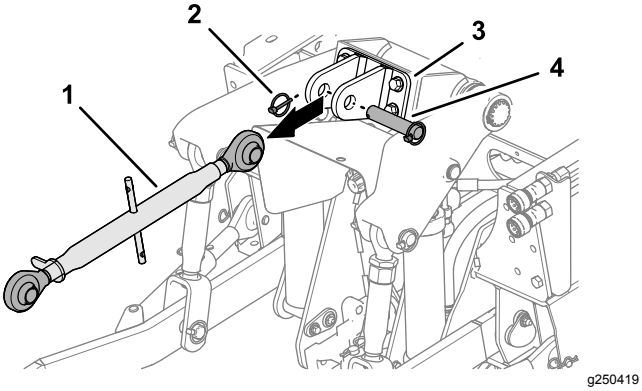

Figure 10

1. Upper 3-point link
2. Lynch pin
3. Upper-link bracket
4. Clevis pin

4. Fully raise the lower links of the 3-point hitch (Figure 11).

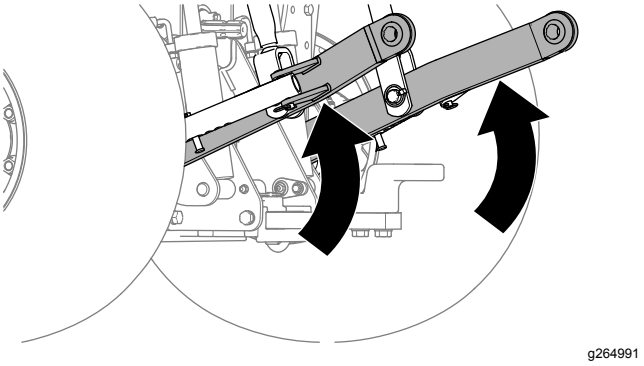

Figure 11

5. Use the hydraulic hand pump, move the lift arm (Figure 12) just rearward of the forward holes in the lock-bar bracket (transport position).

   Note: The lift arm is in the transport position when the bar is positioned rearward of the forward lock-bar bracket hole.

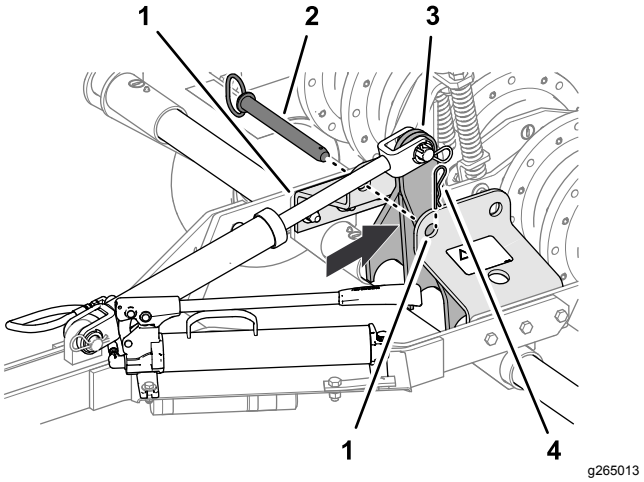

Figure 12

1. Lock-bar bracket
2. Lock-bar pin
3. Lift arm (transport position)
4. Hairpin

6. Insert the lock-bar pin into the forward holes in the lock-bar bracket and secure the lock-bar pin to the bracket with the hairpin (Figure 12).
7. Align the tongue of the aerator to the draw bar of the traction unit and use the hitch hardware of the vehicle to secure the aerator (Figure 13).

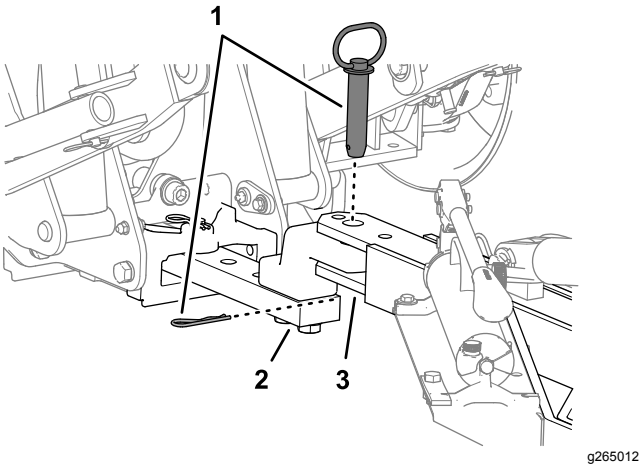

Figure 13

1. Hitch hardware (traction unit)
2. Draw bar (traction unit)
3. Tongue (aerator)

Attaching Aerator

Model 44867

1. Lower the lower-link arms of the traction unit (Figure 14).

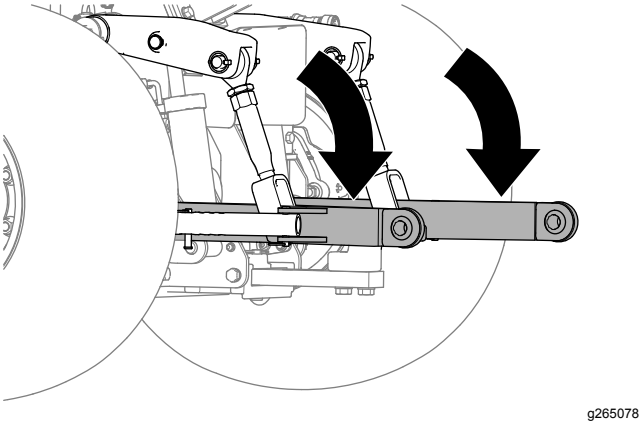

Figure 14

2. Adjust the lower-link arms (Figure 15) outward fully; refer to the operator's manual for the traction unit.

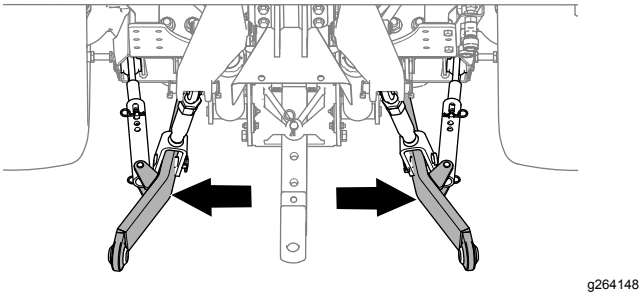

Figure 15

3. If removed, install the upper 3-point link (Figure 16) to the traction unit.

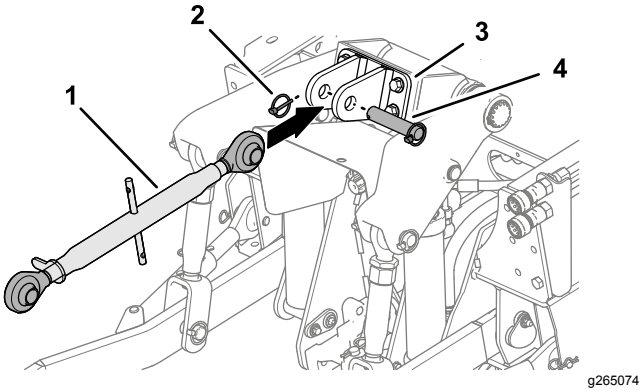

Figure 16

1. Upper 3-point link
2. Lynch pin
3. Upper-link bracket
4. Clevis pin

4. Position the aerator so that the lower-link arms of the traction unit line up with the lift-arm pins of the aerator (Figure 17).

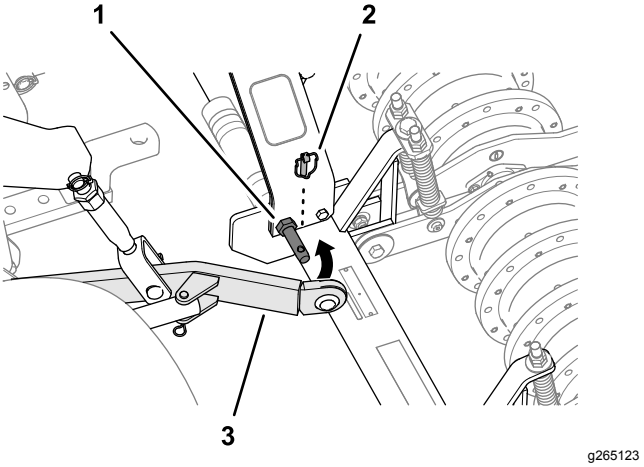

Figure 17

1. Lift-arm pins (aerator)
2. Lynch pin
3. Lower-link arm (traction unit)

5. Assemble the lower-link arms to the lift-arm pins and secure the arms with the lynch pins (Figure 17).
6. Assemble the other end of the upper 3-point link to the lift arms of the aerator (Figure 18) with the bolt (3/4 x 4 inches), nut (3/4 inch), and jam nut (3/4 inch).

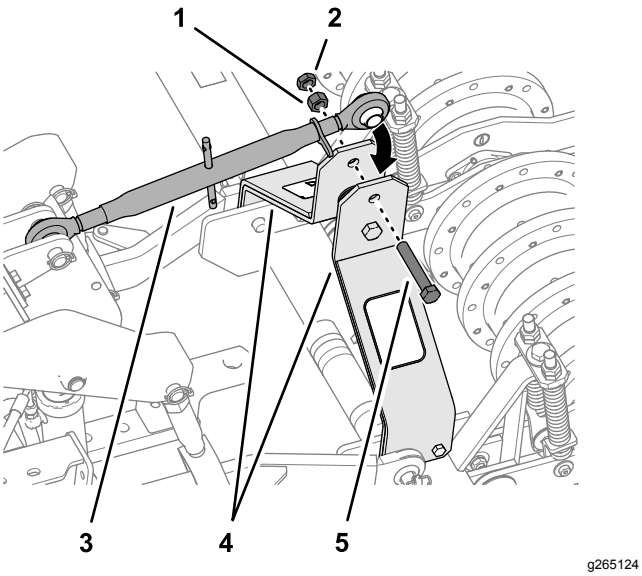

Figure 18

1. Nut (3/4 inch)
2. Jam nut (3/4 inch)
3. Upper 3-point link
4. Lift arms (aerator)
5. Bolt (3/4 x 4 inches)

7. Adjust the links of the 3-point hitch to level the aerator left to right and front to back (Figure 19); refer to the operator's manual for your traction unit.

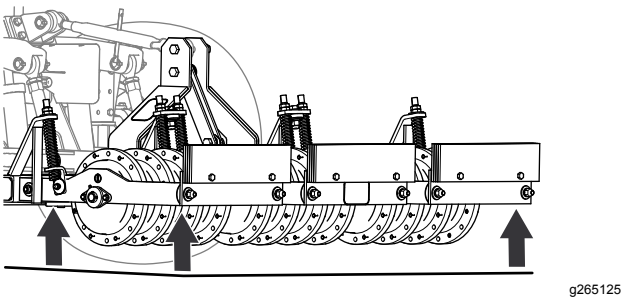

Figure 19

Installing the Tines

Important: **Install the tines only after attaching the aerator to the traction unit.**

1. Start at the outside casting and install the tines as shown in Figure 20.

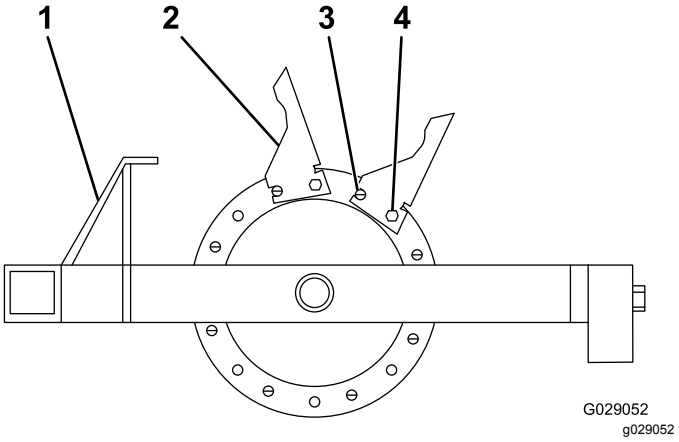

Figure 20

1. Hitch
2. Tine
3. Roll pin
4. Bolt

2. Install all 8 tines on the casting, using a roll pin and bolts (1/2 inch x 1-3/4 inches) and ensuring that the roll pin is in the front position (Figure 20).

   Note: Ensure that the roll pin is in the front hole and the bolt is in the second hole.

Using the Aerator

Using Model 44856

1. Close the valve at the base of the hydraulic hand-pump (Figure 21) and stroke the pump handle until the lock pin rotates in the lock-bar bracket.

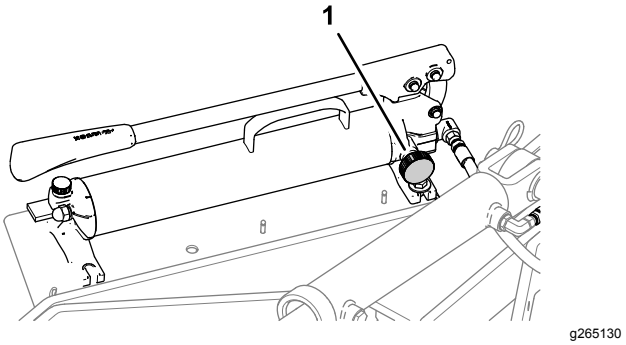

Figure 21

1. Valve knob (hydraulic hand-pump)

2. Remove the hair pin and move the lock pin to the rear holes (stow/aerating position) in the

lock-bar bracket, and secure the lock pin to the bracket with the hair pin (Figure 22).

Note: Moving the lock pin to stow/aerating position allows you to raise and lower the aerator while working at the job site.

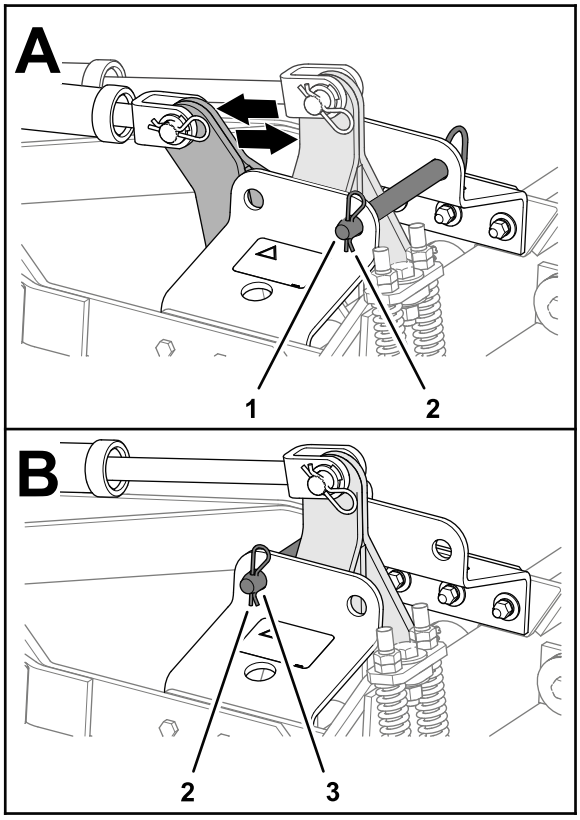

g265163

Figure 22

1. Lock pin—stow/aerating position (rear hole of the lock-bar bracket)
2. Hairpin
3. Lock pin—transport position (rear hole of the lock-bar bracket)

3. Open the valve at the base of the hydraulic hand-pump to lower the aerator to the ground.
4. Return to the operator's seat and follow the procedures for towing an implement; refer to the operator's manual for the traction unit.
5. At the end of the desired aerating region, stop the traction unit, engage the parking brake, shut off the engine, and remove the key before getting out of the operator's seat.
6. Close the valve of the hydraulic hand-pump (Figure 21) and stroke the pump handle to raise the aerator to the transport position.
7. Remove the hair pin and move the lock pin to the forward holes (transport position) in the lock-bar bracket, and secure the lock pin to the bracket with the hair pin (Figure 22).

Using Model 44867

1. Start the traction unit engine and run it at a low speed.
2. With 3-point or remote-hydraulics control of the traction unit, slowly lower the aerator while the traction unit is slowly moving forward (Figure 23).

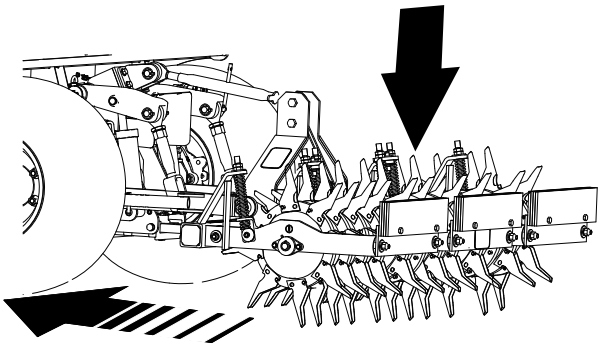

g265323

Figure 23

3. As aerating begins, increase the speed of the traction unit.
4. Raise the aerator at the end of the pass before turning (Figure 24).

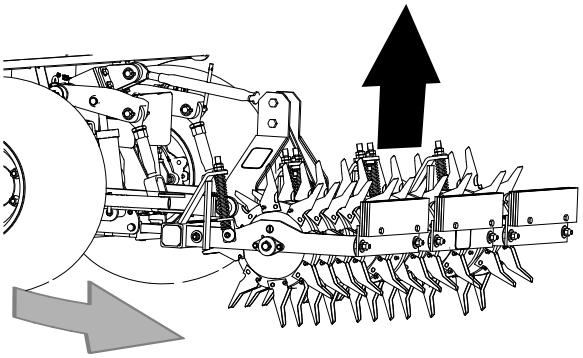

g265324

Figure 24

Maintenance

⚠ CAUTION

If you leave the key in the switch, someone could accidently start the engine and seriously injure you or other bystanders.

Remove the key from the switch before you perform any maintenance.

Recommended Maintenance Schedule(s)

Maintenance Service Interval	Maintenance Procedure
Before each use or daily	• Check the tire air pressure. • Check the tines for wear.
Every 40 hours	• Grease the fittings.
Every 100 hours	• Check the main arm bushings.

Lubrication

Lubricating the Bearings

Service Interval: Every 40 hours

Grease Specification: No. 2 lithium grease

Lubricate the aerator with the specified grease as shown in Figure 25 or Figure 26.

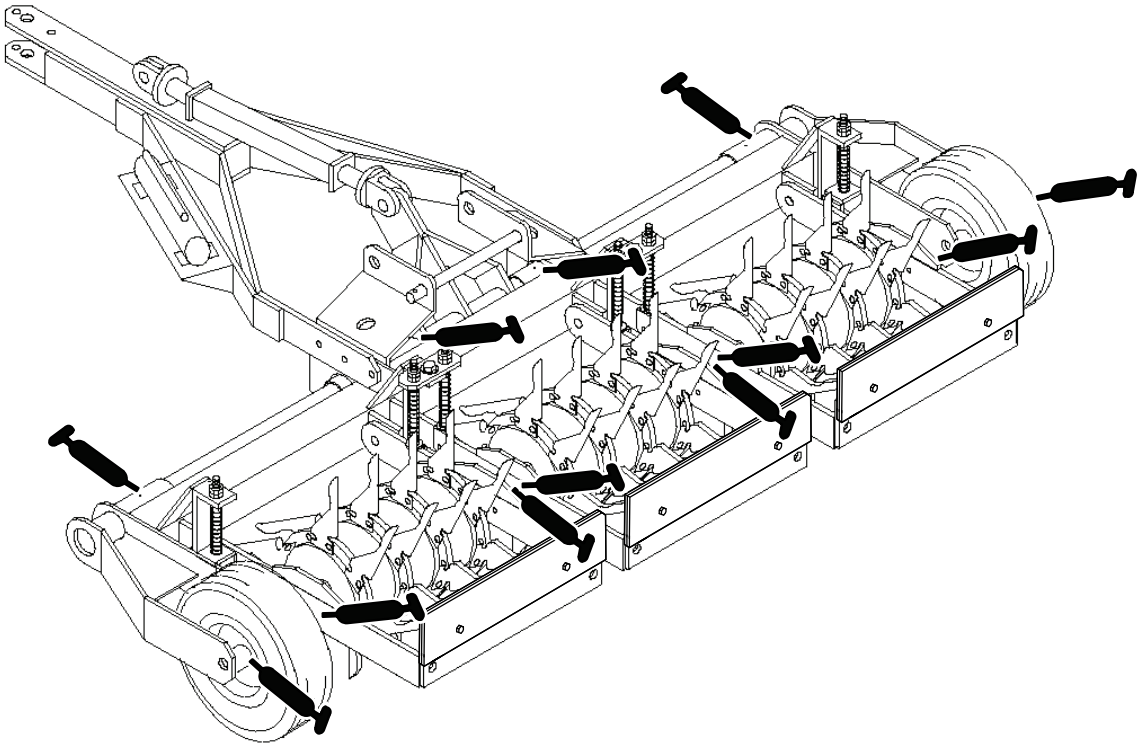

g265329

Figure 25

Model 44856

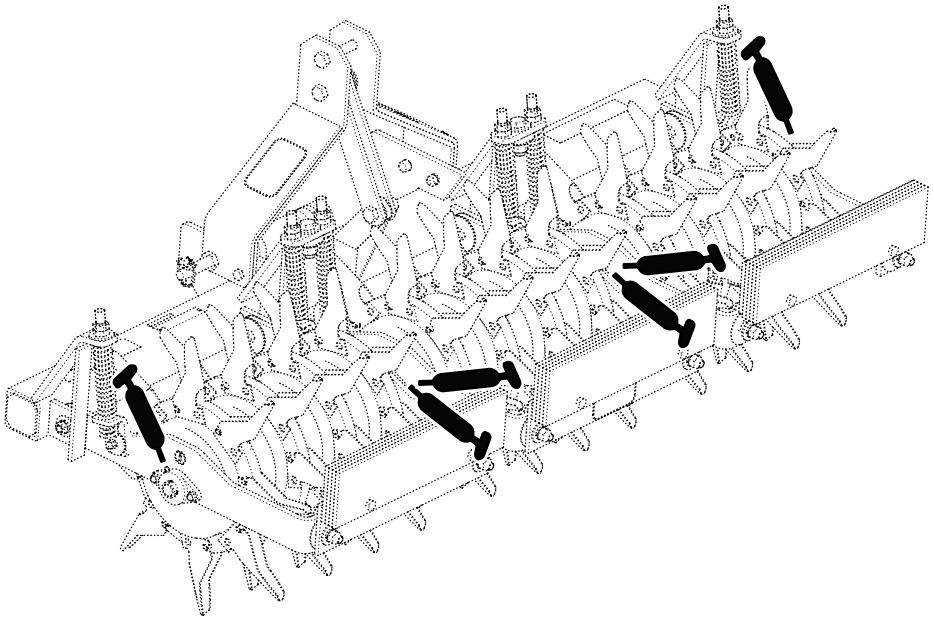

g265328

Figure 26
Model 44867

Chassis Maintenance

Checking Tire Air Pressure

Model 44856

Service Interval: Before each use or daily

1. Check the tire pressure (Figure 27).

   You should measure 413 kPa (60 psi).

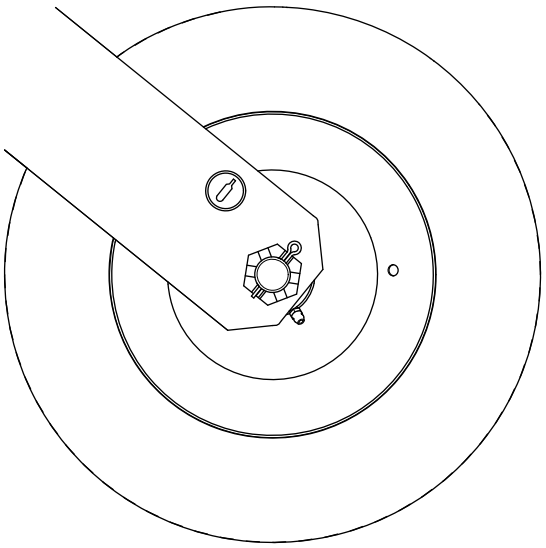

g265014

Figure 27

2. If needed, add or remove air to or air from the tires until you measure 413 kPa (60 psi).

Checking the Main Arms Bushings

Service Interval: Every 100 hours

The 6 main arms pivot freely horizontally and vertically to allow the unit to follow the contour of the ground. A bronze bushing is pressed inside the pivot holes between the main arms and frame mounting brackets (Figure 28).

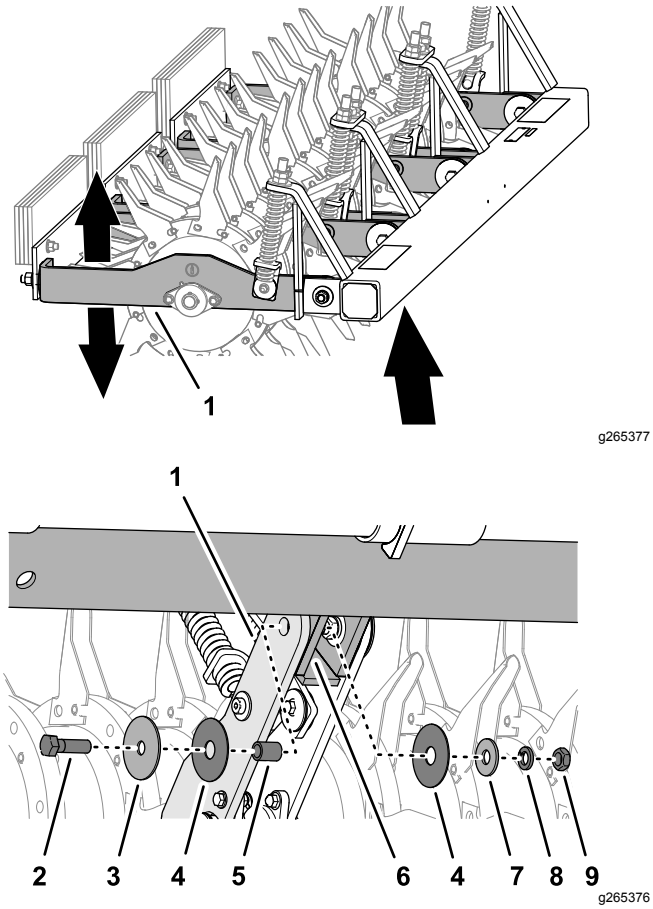

Figure 28

1. Main arm
2. Bolt (5/8 x 2 inches)
3. Washer (5/8 x 3 inches)
4. Washer (11/16 x 3 inches)
5. Bronze bushing
6. Frame mounting bracket
7. Washer (5/8 x 1-3/4 inches)
8. Lock washer
9. Nut (5/8 inch)

1. Move the aerator to the transport position; refer to Using the Aerator (page 12).
2. Check that the 6 main arms pivot freely (Figure 28).
3. If a main arm binds, perform the following steps:
   A. Loosen the spring tension; refer to Adjusting the Springs (page 16).
   B. Remove the bolt, nut, washers, and bushing, that secure the main arm to the frame mounting bracket (Figure 28) and check the hardware for wear.

      Note: Replace all worn or damaged hardware. The bronze bushing is 3 mm (1/8 inch) longer than the combined main arm and mounting bracket plate thickness.
   C. Assemble the main arm to the frame mounting bracket with the bolt, nut, washers, and bushing (Figure 28).
   D. Tighten the bolt (5/8 x 2 inch) and nut (5/8 inch) against the bushings, not the arms, to allow it to pivot freely.
   E. Adjust the spring tension; refer to Adjusting the Springs (page 16).

Adjusting the Springs

The purpose of the springs is to distribute the weight evenly and reduce the shock load on the pivot points. Adjust the springs evenly across to level the machine. Use the nuts at top of the spring rod to adjust the spring tension (Figure 29).

Important: **When adjusting the spring tension, do not completely compress the coils are. Allow at least 1.6 mm (1/16 inch) of space between coils.**

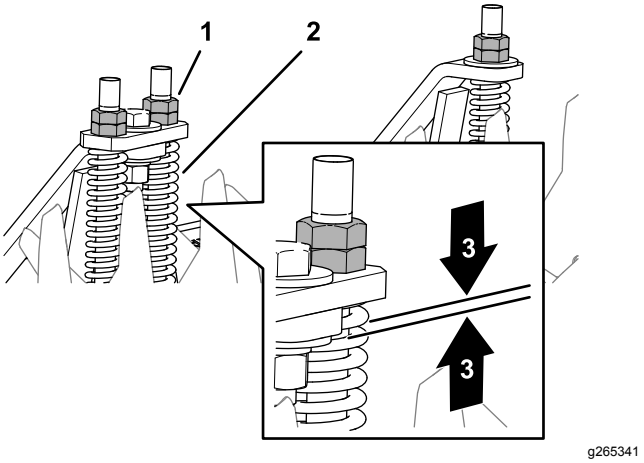

Figure 29

1. Spring rod nuts
2. Spring
3. 1.6 mm (1/16 inch) minimum space \between coils

Checking the Tines

Service Interval: Before each use or daily

To obtain maximum aerating performance, always check the tines for wear and damage before every use. Severely worn tines are easy to bend or break and leave the cores in the ground. See Figure 30 for examples of tine wear.

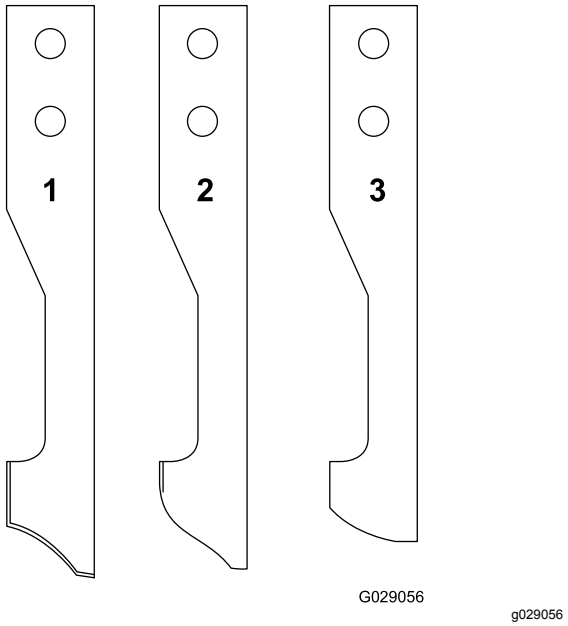

Figure 30

1. New
2. Badly worn but usable
3. Worn and unusable—replace

Always clean cores out of the tines before storage. Cores left in tines for extended periods can cause pitting on the inside of the tine which keep the core from ejecting.

Storage

1. Raise the tines.
2. Stop the traction unit, shut off the engine, engage the parking brake, and remove the key.
3. Remove dirt and debris from the entire aerator. Clean the cores out of the tines.

   Important: **You can wash the aerator with mild detergent and water. Do not pressure wash the aerator.**
4. Lubricate the aerator; refer to Lubrication (page 14).
5. Check the condition of the tines. Replace any broken or worn tines.
6. Check and tighten all bolts, nuts, and screws. Repair or replace any part that is damaged.
7. Paint all scratched or bare metal surfaces. Paint is available from your authorized Service dealer.
8. Store the aerator in a clean, dry garage or storage area.
9. Cover the aerator to protect it and keep it clean.

EEA/UK Privacy Notice

Toro's Use of Your Personal Information

The Toro Company ("Toro") respects your privacy. When you purchase our products, we may collect certain personal information about you, either directly from you or through your local Toro company or dealer. Toro uses this information to fulfil contractual obligations - such as to register your warranty, process your warranty claim or to contact you in the event of a product recall - and for legitimate business purposes - such as to gauge customer satisfaction, improve our products or provide you with product information which may be of interest. Toro may share your information with our subsidiaries, affiliates, dealers or other business partners in connection these activities. We may also disclose personal information when required by law or in connection with the sale, purchase or merger of a business. We will never sell your personal information to any other company for marketing purposes.

Retention of your Personal Information

Toro will keep your personal information as long as it is relevant for the above purposes and in accordance with legal requirements. For more information about applicable retention periods please contact legal@toro.com.

Toro's Commitment to Security

Your personal information may be processed in the US or another country which may have less strict data protection laws than your country of residence. Whenever we transfer your information outside of your country of residence, we will take legally required steps to ensure that appropriate safeguards are in place to protect your information and to make sure it is treated securely.

Access and Correction

You may have the right to correct or review your personal data, or object to or restrict the processing of your data. To do so, please contact us by email at legal@toro.com. If you have concerns about the way in which Toro has handled your information, we encourage you to raise this directly with us. Please note that European residents have the right to complain to your Data Protection Authority.

California Proposition 65 Warning Information

What is this warning?

You may see a product for sale that has a warning label like the following:

WARNING: Cancer and Reproductive Harm—www.p65Warnings.ca.gov.

What is Prop 65?

Prop 65 applies to any company operating in California, selling products in California, or manufacturing products that may be sold in or brought into California. It mandates that the Governor of California maintain and publish a list of chemicals known to cause cancer, birth defects, and/or other reproductive harm. The list, which is updated annually, includes hundreds of chemicals found in many everyday items. The purpose of Prop 65 is to inform the public about exposure to these chemicals.

Prop 65 does not ban the sale of products containing these chemicals but instead requires warnings on any product, product packaging, or literature with the product. Moreover, a Prop 65 warning does not mean that a product is in violation of any product safety standards or requirements. In fact, the California government has clarified that a Prop 65 warning "is not the same as a regulatory decision that a product is 'safe' or 'unsafe.'" Many of these chemicals have been used in everyday products for years without documented harm. For more information, go to https://oag.ca.gov/prop65/faqs-view-all.

A Prop 65 warning means that a company has either (1) evaluated the exposure and has concluded that it exceeds the "no significant risk level"; or (2) has chosen to provide a warning based on its understanding about the presence of a listed chemical without attempting to evaluate the exposure.

Does this law apply everywhere?

Prop 65 warnings are required under California law only. These warnings are seen throughout California in a wide range of settings, including but not limited to restaurants, grocery stores, hotels, schools, and hospitals, and on a wide variety of products. Additionally, some online and mail order retailers provide Prop 65 warnings on their websites or in catalogs.

How do the California warnings compare to federal limits?

Prop 65 standards are often more stringent than federal and international standards. There are various substances that require a Prop 65 warning at levels that are far lower than federal action limits. For example, the Prop 65 standard for warnings for lead is 0.5 µg/day, which is well below the federal and international standards.

Why don't all similar products carry the warning?

- Products sold in California require Prop 65 labelling while similar products sold elsewhere do not.
- A company involved in a Prop 65 lawsuit reaching a settlement may be required to use Prop 65 warnings for its products, but other companies making similar products may have no such requirement.
- The enforcement of Prop 65 is inconsistent.
- Companies may elect not to provide warnings because they conclude that they are not required to do so under Prop 65; a lack of warnings for a product does not mean that the product is free of listed chemicals at similar levels.

Why does Toro include this warning?

Toro has chosen to provide consumers with as much information as possible so that they can make informed decisions about the products they buy and use. Toro provides warnings in certain cases based on its knowledge of the presence of one or more listed chemicals without evaluating the level of exposure, as not all the listed chemicals provide exposure limit requirements. While the exposure from Toro products may be negligible or well within the "no significant risk" range, out of an abundance of caution, Toro has elected to provide the Prop 65 warnings. Moreover, if Toro does not provide these warnings, it could be sued by the State of California or by private parties seeking to enforce Prop 65 and subject to substantial penalties.

The Toro Warranty

A Two-Year Limited Warranty

Conditions and Products Covered

The Toro Company and its affiliate, Toro Warranty Company, pursuant to an agreement between them, jointly warrant your Toro Commercial product ("Product") to be free from defects in materials or workmanship for two years or 1500 operational hours*, whichever occurs first. This warranty is applicable to all products with the exception of Aerators (refer to separate warranty statements for these products). Where a warrantable condition exists, we will repair the Product at no cost to you including diagnostics, labor, parts, and transportation. This warranty begins on the date the Product is delivered to the original retail purchaser.
* Product equipped with an hour meter.

Instructions for Obtaining Warranty Service

You are responsible for notifying the Commercial Products Distributor or Authorized Commercial Products Dealer from whom you purchased the Product as soon as you believe a warrantable condition exists. If you need help locating a Commercial Products Distributor or Authorized Dealer, or if you have questions regarding your warranty rights or responsibilities, you may contact us at:

Toro Commercial Products Service Department
Toro Warranty Company
8111 Lyndale Avenue South
Bloomington, MN 55420-1196

952–888–8801 or 800–952–2740
E-mail: commercial.warranty@toro.com

Owner Responsibilities

As the Product owner, you are responsible for required maintenance and adjustments stated in your *Operator's Manual*. Failure to perform required maintenance and adjustments can be grounds for disallowing a warranty claim.

Items and Conditions Not Covered

Not all product failures or malfunctions that occur during the warranty period are defects in materials or workmanship. This warranty does not cover the following:

- Product failures which result from the use of non-Toro replacement parts, or from installation and use of add-on, or modified non-Toro branded accessories and products. A separate warranty may be provided by the manufacturer of these items.
- Product failures which result from failure to perform recommended maintenance and/or adjustments. Failure to properly maintain your Toro product per the Recommended Maintenance listed in the *Operator's Manual* can result in claims for warranty being denied.
- Product failures which result from operating the Product in an abusive, negligent, or reckless manner.
- Parts subject to consumption through use unless found to be defective. Examples of parts which are consumed, or used up, during normal Product operation include, but are not limited to, brake pads and linings, clutch linings, blades, reels, rollers and bearings (sealed or greasable), bed knives, spark plugs, castor wheels and bearings, tires, filters, belts, and certain sprayer components such as diaphragms, nozzles, and check valves, etc.
- Failures caused by outside influence. Conditions considered to be outside influence include, but are not limited to, weather, storage practices, contamination, use of unapproved fuels, coolants, lubricants, additives, fertilizers, water, or chemicals, etc.
- Failure or performance issues due to the use of fuels (e.g. gasoline, diesel, or biodiesel) that do not conform to their respective industry standards.
- Normal noise, vibration, wear and tear, and deterioration.
- Normal "wear and tear" includes, but is not limited to, damage to seats due to wear or abrasion, worn painted surfaces, scratched decals or windows, etc.

Parts

Parts scheduled for replacement as required maintenance are warranted for the period of time up to the scheduled replacement time for that part. Parts replaced under this warranty are covered for the duration of the original product warranty and become the property of Toro. Toro will make the final decision whether to repair any existing part or assembly or replace it. Toro may use remanufactured parts for warranty repairs.

Deep Cycle and Lithium-Ion Battery Warranty:

Deep cycle and Lithium-Ion batteries have a specified total number of kilowatt-hours they can deliver during their lifetime. Operating, recharging, and maintenance techniques can extend or reduce total battery life. As the batteries in this product are consumed, the amount of useful work between charging intervals will slowly decrease until the battery is completely worn out. Replacement of worn out batteries, due to normal consumption, is the responsibility of the product owner. Battery replacement may be required during the normal product warranty period at owner's expense. Note: (Lithium-Ion battery only): A Lithium-Ion battery has a part only prorated warranty beginning year 3 through year 5 based on the time in service and kilowatt hours used. Refer to the *Operator's Manual* for additional information.

Maintenance is at Owner's Expense

Engine tune-up, lubrication, cleaning and polishing, replacement of filters, coolant, and completing recommended maintenance are some of the normal services Toro products require that are at the owner's expense.

General Conditions

Repair by an Authorized Toro Distributor or Dealer is your sole remedy under this warranty.

Neither The Toro Company nor Toro Warranty Company is liable for indirect, incidental or consequential damages in connection with the use of the Toro Products covered by this warranty, including any cost or expense of providing substitute equipment or service during reasonable periods of malfunction or non-use pending completion of repairs under this warranty. Except for the Emissions warranty referenced below, if applicable, there is no other express warranty. All implied warranties of merchantability and fitness for use are limited to the duration of this express warranty.

Some states do not allow exclusions of incidental or consequential damages, or limitations on how long an implied warranty lasts, so the above exclusions and limitations may not apply to you. This warranty gives you specific legal rights, and you may also have other rights which vary from state to state.

Note regarding engine warranty:

The Emissions Control System on your Product may be covered by a separate warranty meeting requirements established by the U.S. Environmental Protection Agency (EPA) and/or the California Air Resources Board (CARB). The hour limitations set forth above do not apply to the Emissions Control System Warranty. Refer to the Engine Emission Control Warranty Statement supplied with your product or contained in the engine manufacturer's documentation for details

Countries Other than the United States or Canada

Customers who have purchased Toro products exported from the United States or Canada should contact their Toro Distributor (Dealer) to obtain guarantee policies for your country, province, or state. If for any reason you are dissatisfied with your Distributor's service or have difficulty obtaining guarantee information, contact the Toro importer.