Form No. 3422-905 Rev B

TORO®

Count on it.

Parts Catalog

# Multi Pro® 5800-G

## Turf Sprayer with ExcelaRate Spray System

**Model No. 41394—Serial No. 402700001 and Up**

Register at www.Toro.com.
Original Instructions (EN)

*3422-905* B

# Ordering Replacement Parts

To order replacement parts, please supply the part number, the quantity, and the description of each part desired.

### Understanding Reference Numbers

Each identified part in an illustration has a reference number. The reference number for a part also appears in the parts list, along with other information about the part.

This catalog uses two special reference number formats, one to indicate parts in a service assembly and another to indicate the quantity of a given part in an illustration.

### Service Assembly Reference Numbers

Parts in service assemblies have reference numbers in the form a:b. The a represents the reference number of the entire service assembly and the b represents a sequential number unique to each part within the service assembly.

For example, a wheel assembly might be identified by reference number 6, the tire by 6:1, the valve by 6:2, and the wheel by 6:3. When you order the assembly identified by reference number 6, you receive all parts identified by reference numbers 6:1,6:2, and 6:3. However, you may also order any part individually. Reference numbers of this type appear in illustration and in parts lists.

### Reference Numbers Indicating Quantity

In an illustration, if a reference number indicates more than one part, the reference number has the form nX y. The n represents the quantity of the part, the X is the multiplication symbol, and the y represents the reference number.

For example, in an illustration, the reference number 2X 37 means that two of the parts identified by reference number 37 are indicated.

# Contents


Frame and Step Assembly . . . 5
Front Axle Assembly . . . 6
Hydraulic Cylinder Assembly No. 93-6510 . . . 8
Hub Assembly No. 119-6003 . . . 9
Front Suspension Assembly . . . 10
Seat Base Assembly . . . 11
Seat, Fresh Water Tank and Roll-Over Protection System Assembly . . . 12
Control Console Assembly . . . 14
Brake Pedal Assembly . . . 15
Traction Pedal Assembly . . . 16
Throttle Assembly . . . 17
Dash Panel Assembly . . . 18
Hood and Fender Assembly . . . 19
Engine Mounting and Bell Housing Assembly . . . 20
Muffler and Air Cleaner Assembly . . . 21
Air Cleaner Assembly No. 106-5277 . . . 23
Engine and Shroud Assembly . . . 24
Fuel Tank Assembly . . . 25
Radiator Assembly . . . 26
Hydraulic Pump and Filter Assembly . . . 28
Piston Pump Assembly No. 117-0685 . . . 30
Control Assembly No. 115-4446 . . . 32
Tandem Pump Assembly No. 119-5038 . . . 33
Hydraulic Tank Assembly . . . 34
Hydraulic Pump and Filter Assembly . . . 35
Pump Control Valve Assembly No. 117-0708 . . . 37
Steering Hydraulic Assembly . . . 38
Steer Valve Assembly No. 117-0707 . . . 39
Boom Lift Assembly . . . 40
Hydraulic Cylinder Assembly No. 117-0701 . . . 41
On-Off Boom Lift Valve Assembly No. 136-2400 . . . 42
Rear Drive Assembly . . . 43
Planetary Assembly No. 136-2913 . . . 45
RH Brake Assembly No. 100-3069 . . . 46
LH Brake Assembly No. 100-3070 . . . 47
Hydraulic Motor Assembly No. 132-5631 . . . 48
Hydraulic Motor Assembly No. 136-2373 . . . 49
Electrical Assembly . . . 50
Tank and Saddle Assembly . . . 51
Tank Assembly No. 117-8005 . . . 52
Spray Tank Lid Assembly No. 119-9380 . . . 53
Bypass Hose Assembly No. 132-4297 . . . 54
Tank Mounting and Filter Assembly . . . 55
Filter Assembly No. 130-7096 . . . 56
Spray System Hose Assembly . . . 57
Spray Manifold Assembly . . . 59
Manifold Valve Kit No. 131-7256 . . . 60
Manifold Valve Kit No. 131-0253 . . . 61
Pressure Filter Assembly No. 131-3791 . . . 62
On/Off Manifold Valve Kit No. 127-9803 . . . 63
On/Off Actuator Kit No. 131-3723 . . . 64
Bypass Valve Assembly No. 127-9805 . . . 65
On/Off 2-Way Valve Kit No. 131-0249 . . . 66
Spray Pump and Valve Assembly . . . 67



**© 2018—The Toro® Company**


**8111 Lyndale Avenue South**
**Bloomington, MN 55420**





**Contact us at www.Toro.com.**
**Printed in the USA.**


**All Rights Reserved**

# Contents (continued)

Pump Assembly No. 137-4230 . . . 69
Agitation Hose Assembly No. 132-4309 . . . 70
Hydraulic Motor Assembly No. 117-0706 . . . 71
Center Boom Assembly . . . 72
RH Single Body Turret Assembly No. 108-3726 . . . 74
Double Turret Body Assembly No. 108-3727 . . . 75
LH Single Turret Body Assembly No. 108-3725 . . . 76
Left and Right Hand Boom Assembly . . . 77
Crankcase Assembly . . . 78
Oil Pan Assembly . . . 79
Cylinder Head Assembly . . . 80
Gear Case and Oil Filter Cartridge Assembly . . . 81
Cylinder Head Cover Assembly . . . 82
Oil Dipstick and Guide Assembly . . . 83
Main Bearing Case Assembly . . . 84
Cam Shaft and Idle Gear Assembly . . . 85
Piston and Crankshaft Assembly . . . 86
Flywheel and Sensor Switch Assembly . . . 87
Ignition Coil and Delivery Pipe Assembly . . . 88
Engine Covers Assembly . . . 89
Solenoid Cover and Hydraulic Pump Cover . . . 90
Alternator, Pulley and Fan Assembly . . . 91
Alternator Components . . . 92
Starter Installation Assembly . . . 93
Starter Components Assembly . . . 94
Water Flange and Thermostat Assembly . . . 95
Water Pump Assembly . . . 96
Valve and Rocker Arm Assembly . . . 97
Inlet Manifold Assembly . . . 98
Exhaust Manifold Assembly . . . 99
Wire Harness Assembly . . . 100
Electronic Control Unit Assembly . . . 101
Miscellaneous Engine Parts . . . 102
Attachments and Accessories . . . 103

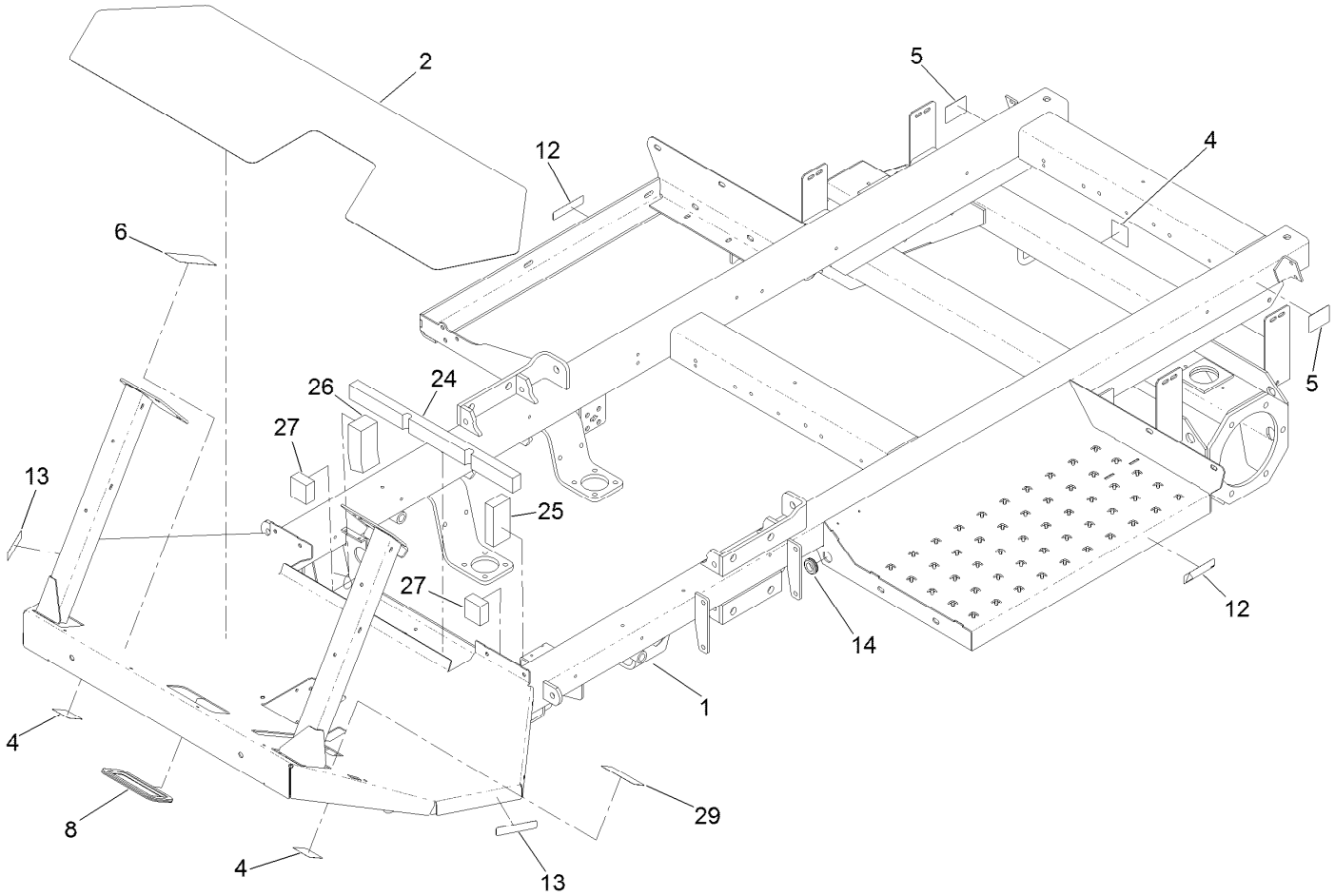


# Frame and Step Assembly

| *Ref.* | *Part Number* | *Qty.* | *Description* |
|---|---|---|---|
| 1 | 130-7070-03 | 1 | Frame |
| 2 | 104-8863 | 1 | Tread-Floor |
| 4 | 120-0623 | 3 | Decal-Tie Down, Towing |
| 5 | 107-8667 | 2 | Decal-Jacking |
| 6 | 107-8724 | 1 | Decal-Traction |
| 8 | 119-0599 | 1 | Trim-Seal |
| 12 | 107-8732 | 2 | Decal-Torque (CE) |
| 13 | 107-8731 | 2 | Decal-Torque (CE) |
| 14 | 240-6 | 1 | Grommet-Rubber |
| 24 | 131-5751 | 1 | Foam-Seal |
| 25 | 131-5752 | 1 | Foam-Seal |
| 26 | 131-5753 | 1 | Foam-Seal |
| 27 | 131-5754 | 2 | Foam-Seal |
| 29 | 136-2351 | 1 | Decal-Brake, Parking |

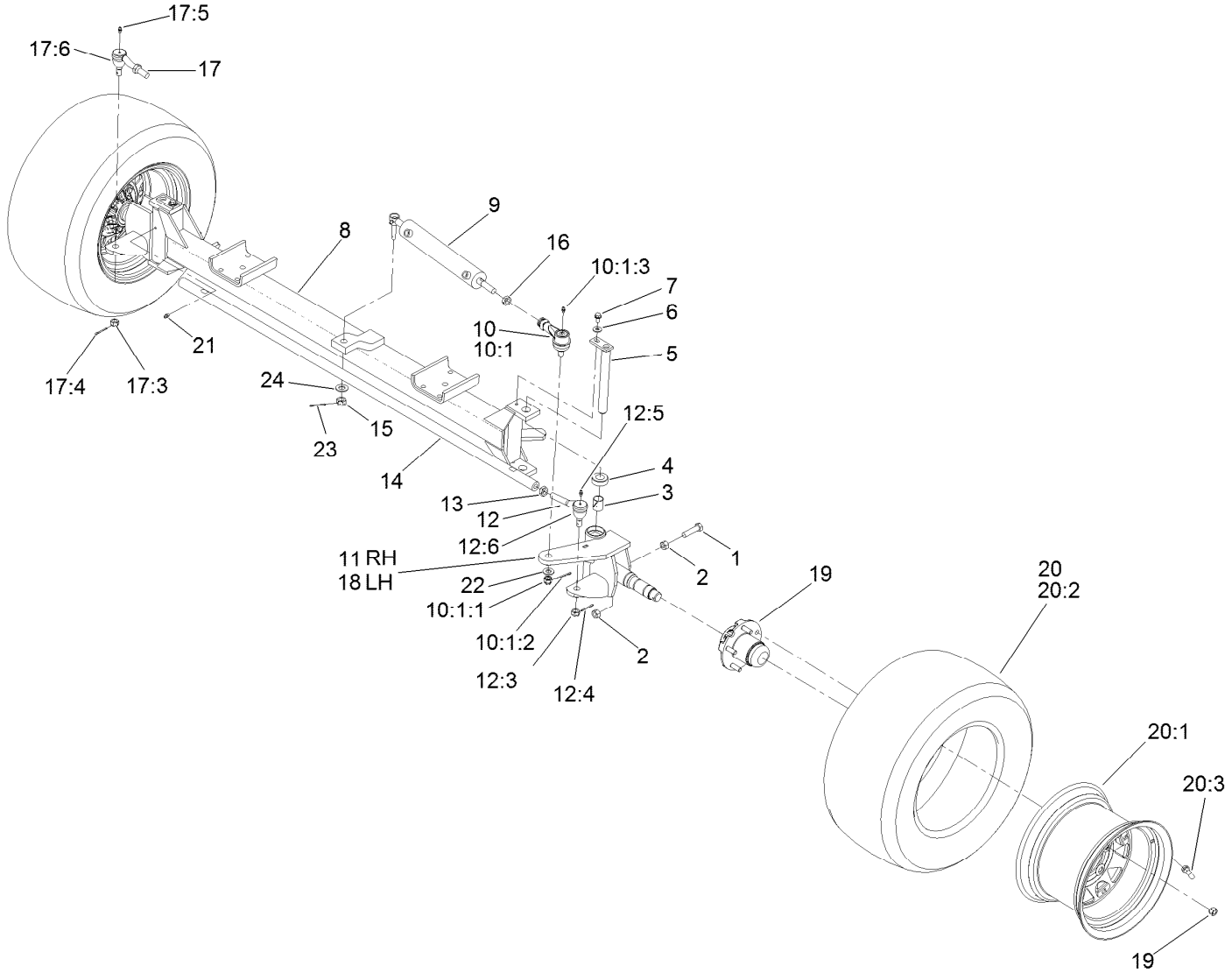


# Front Axle Assembly

| Ref. | Part Number | Qty. | Description |
|---|---|---|---|
| 1 | 01-182-0816 | 2 | Bolt-HH |
| 2 | 3217-9 | 4 | Nut-HH |
| 3 | 93-6586 | 4 | Bushing |
| 4 | 93-6587 | 2 | Bearing |
| 5 | 93-6584 | 2 | King Pin ASM |
| 6 | 3256-3 | 2 | Washer-Flat |
| 7 | 32144-14 | 2 | Screw-HWHTF |
| 8 | 121-5087-03 | 1 | Front Axle ASM |
| 9 | 93-6510 | 1 | Cylinder ASM |
| 10 | 93-6509-03 | 1 | Tie Rod End ASM |
| 10:1 | | 1 | End-Tie Rod ● |
| 10:1:1 | 137-4176 | 1 | Nut-Hex, Slotted |
| 10:1:2 | 3272-12 | 1 | Pin-Cotter |
| 10:1:3 | 302-5 | 1 | Fitting-Grease |
| 11 | 117-5899-03 | 1 | LH Spindle Housing ASM |
| 12 | 87-1470-03 | 1 | End-Tie Rod, LH |
| 12:3 | 32136-3 | 1 | Nut-SHH |
| 12:4 | 3272-12 | 1 | Pin-Cotter |

| Ref. | Part Number | Qty. | Description |
|---|---|---|---|
| 12:5 | 302-5 | 1 | Fitting-Grease |
| 12:6 | 107-1587 | 1 | Seal |
| 13 | 3218-21 | 1 | Nut-Jam |
| 14 | 93-6588 | 1 | Rod-Steering |
| 15 | 32136-13 | 1 | Nut-SHH |
| 16 | 3220-11 | 2 | Nut-Jam |
| 17 | 87-1480-03 | 1 | End-Tie Rod, RH |
| 17:3 | 32136-3 | 1 | Nut-SHH |
| 17:4 | 3272-12 | 1 | Pin-Cotter |
| 17:5 | 302-5 | 1 | Fitting-Grease |
| 17:6 | 107-1587 | 1 | Seal |
| 18 | 117-5897-03 | 1 | Spindle ASM |
| 19 | 119-6003 | 2 | Hub ASM |
| 20 | 127-1100 | 2 | Wheel And Tire ASM |
| 20:1 | 125-5899 | 1 | Wheel |
| 20:2 | 120-2114 | 1 | Tire-Smooth |
| 20:3 | 232-27 | 1 | Stem-Valve |
| 21 | 302-5 | 2 | Fitting-Grease |

● Not serviced separately

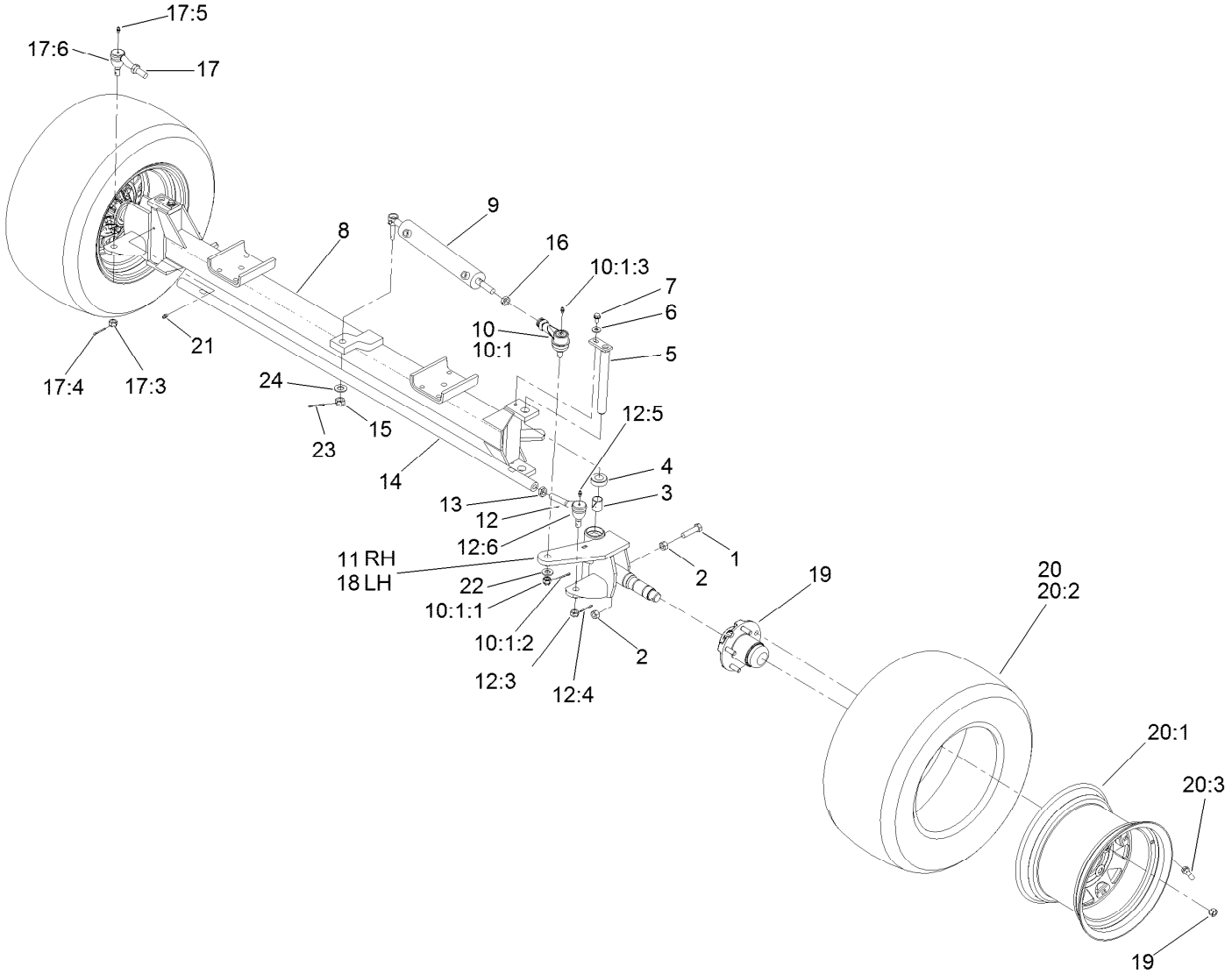


# Front Axle Assembly (continued)

| Ref. | Part Number | Qty. | Description |
|---|---|---|---|
| 22 | 87-7270 | 1 | Washer-Thrust |

| Ref. | Part Number | Qty. | Description |
|---|---|---|---|
| 23 | 3272-12 | 1 | Pin-Cotter |
| 24 | 119-1868 | 1 | Washer |

● Not serviced separately

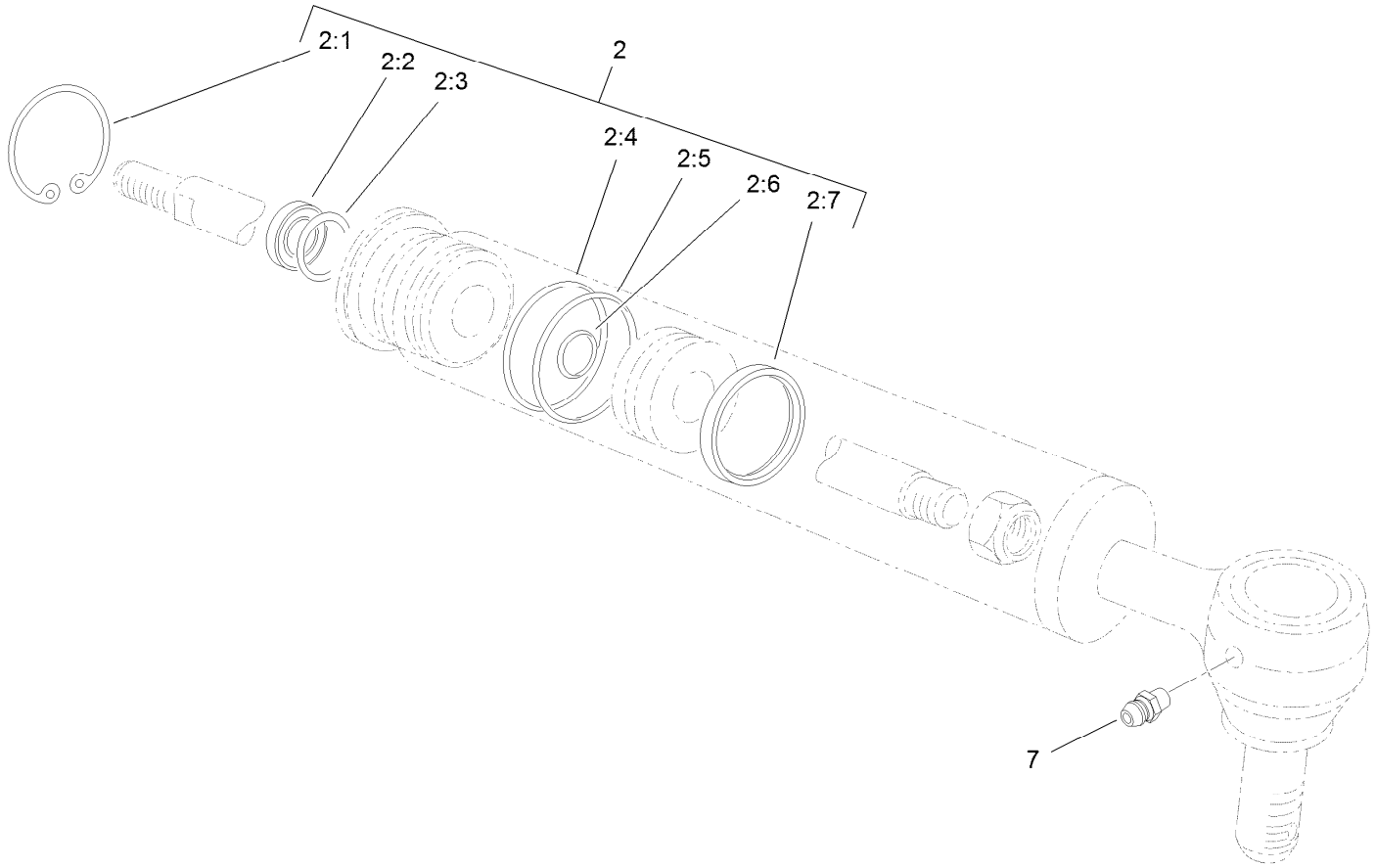


# Hydraulic Cylinder Assembly No. 93-6510

| *Ref.* | *Part Number* | *Qty.* | *Description* |
|---|---|---|---|
| 2 | 92-3992 | 1 | Repair Kit |
| 2:1 | | 1 | Ring-Retaining ● |
| 2:2 | | 1 | Seal-Dust ● |
| 2:3 | | 1 | Seal-Rod ● |
| 2:4 | | 1 | Ring-Backup ● |
| 2:5 | | 1 | O-Ring ● |
| 2:6 | | 1 | O-Ring ● |
| 2:7 | | 1 | Uniring ● |
| 7 | 302-5 | 1 | Fitting-Grease |

● Not serviced separately

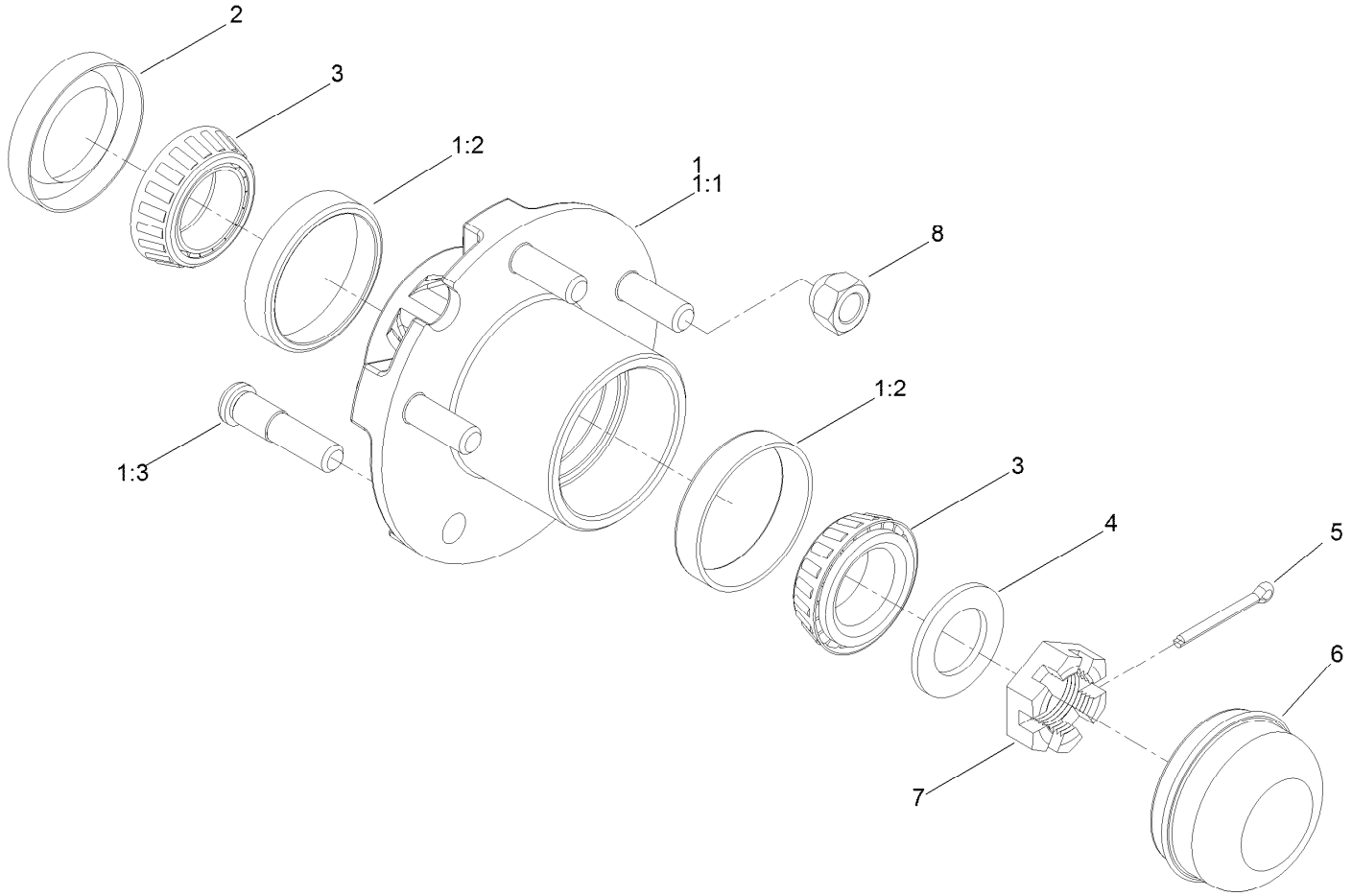


# Hub Assembly No. 119-6003

| Ref. | Part Number | Qty. | Description |
|---|---|---|---|
| 1 | 119-6001 | 1 | Hub ASM |
| 1:1 | | 1 | Hub ● |
| 1:2 | 115-9471 | 2 | Bearing-Cup |
| 1:3 | 69-2990 | 5 | Stud-Wheel |
| 2 | 94-7285 | 1 | Seal |
| 3 | 254-62 | 2 | Bearing-Roller, Cone |
| 4 | 85-5770 | 1 | Washer-Thrust |
| 5 | 3272-18 | 1 | Pin-Cotter |
| 6 | 119-6004 | 1 | Cap-Dust |
| 7 | 119-6005 | 1 | Nut-Slotted, Hex |
| 8 | 242-35 | 5 | Nut-Wheel |

● Not serviced separately

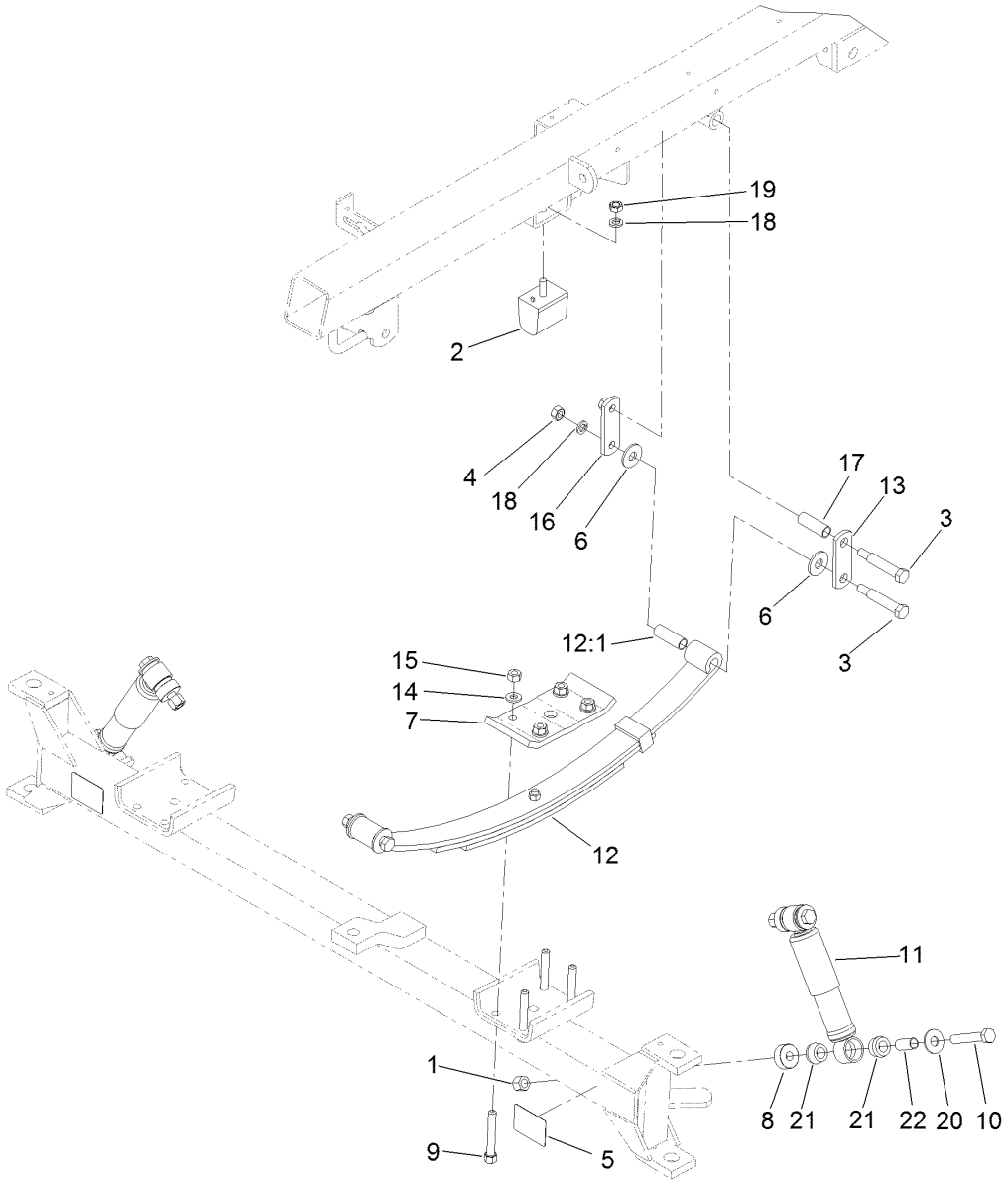


# Front Suspension Assembly

| Ref. | Part Number | Qty. | Description |
|---|---|---|---|
| 1 | 3296-23 | 4 | Nut-Lock, NI |
| 2 | 87-3470 | 2 | Bumper |
| 3 | 110-5072 | 6 | Bolt-Shoulder |
| 4 | 3217-8 | 6 | Nut-Hex |
| 5 | 107-8667 | 2 | Decal-Jacking |
| 6 | 93-6161 | 8 | Washer |
| 7 | 121-5089-03 | 2 | Plate-Top, Spring |
| 8 | 127-2913 | 4 | Spacer |
| 9 | 26-0672 | 8 | Bolt-Blade |
| 10 | 325-12 | 4 | Screw-HH |
| 11 | 121-9774 | 2 | Absorber-Shock |
| 12 | 99-0570 | 2 | Spring-Leaf |

| Ref. | Part Number | Qty. | Description |
|---|---|---|---|
| 12:1 | 119-9437 | 2 | Bushing-Spring, Leaf |
| 13 | 42574 | 2 | Shackel-Outside |
| 14 | 87-7480 | 8 | Washer |
| 15 | 106-0327 | 8 | Nut-Hex |
| 16 | 42576 | 2 | Shackel-Inside |
| 17 | 42592 | 2 | Bushing-Shackle |
| 18 | 3253-6 | 8 | Washer-Lock |
| 19 | 93-6166 | 2 | Nut-Hex |
| 20 | 3256-6 | 4 | Washer-Flat |
| 21 | 87-3920 | 8 | Bushing |
| 22 | 127-2925 | 4 | Sleeve |

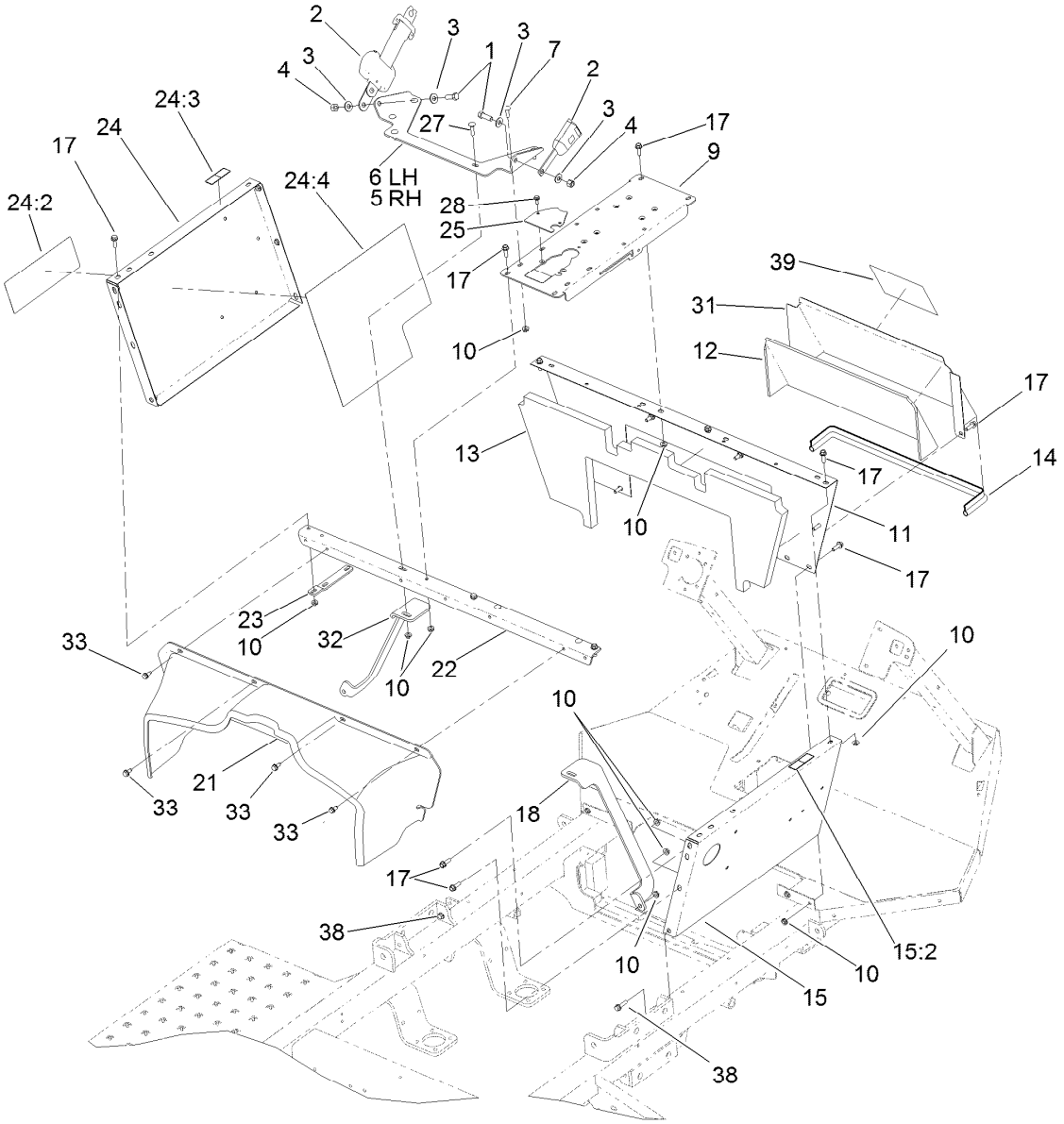


# Seat Base Assembly

| Ref. | Part Number | Qty. | Description |
|---|---|---|---|
| 1 | 324-5 | 4 | Screw-HH |
| 2 | 110-0413 | 2 | Seatbelt-Retractable |
| 3 | 3256-4 | 8 | Washer-Flat |
| 4 | 3296-48 | 4 | Nut-Lock, NI |
| 5 | 121-5071-03 | 1 | Bracket-Seat Belt, RH |
| 6 | 121-5072-03 | 1 | Bracket-Seat Belt, LH |
| 7 | 3230-22 | 10 | Screw-CARR |
| 9 | 132-7667-03 | 1 | Base-Console |
| 10 | 32128-20 | 38 | Nut-HF |
| 11 | 130-7107-01 | 1 | Panel-Front, Seatbase |
| 12 | 130-7132 | 1 | Barrier-Noise, Access Panel |
| 13 | 130-7135 | 1 | Barrier-Noise, Front Panel |
| 14 | 131-3282 | 1 | Trim |
| 15 | 130-7104 | 1 | Panel-Seatbase, RH |
| 15:2 | 120-0625 | 1 | Decal-Warning, Pinch Point |
| 17 | 3234-17 | 20 | Screw-HHF |
| 18 | 107-8729-03 | 1 | Support-RH |

| Ref. | Part Number | Qty. | Description |
|---|---|---|---|
| 21 | 132-7660 | 1 | Cover-Engine |
| 22 | 119-5025-03 | 1 | Angle-Seat Box |
| 23 | 95-2264-03 | 2 | Strap-Support, Belt |
| 24 | 131-5788 | 1 | LH Seat Box Panel ASM |
| 24:2 | 120-0619 | 1 | Decal-Warning |
| 24:3 | 120-0625 | 1 | Decal-Warning, Pinch Point |
| 24:4 | 131-5806 | 1 | Shield-Heat Tape, Seatbase (LH) |
| 25 | 132-7705-03 | 1 | Retainer-Harness, Base |
| 27 | 3230-3 | 2 | Screw-CARR |
| 28 | 119-4012 | 2 | Screw-HWHTF |
| 31 | 130-7119-01 | 1 | Panel-Access, Seatbase |
| 32 | 107-8730-03 | 1 | Support-LH |
| 33 | 32144-70 | 4 | Screw-HWHTF |
| 38 | 3234-36 | 2 | Screw-HHF |
| 39 | 136-2257 | 1 | Decal-Aid, Quick Reference |

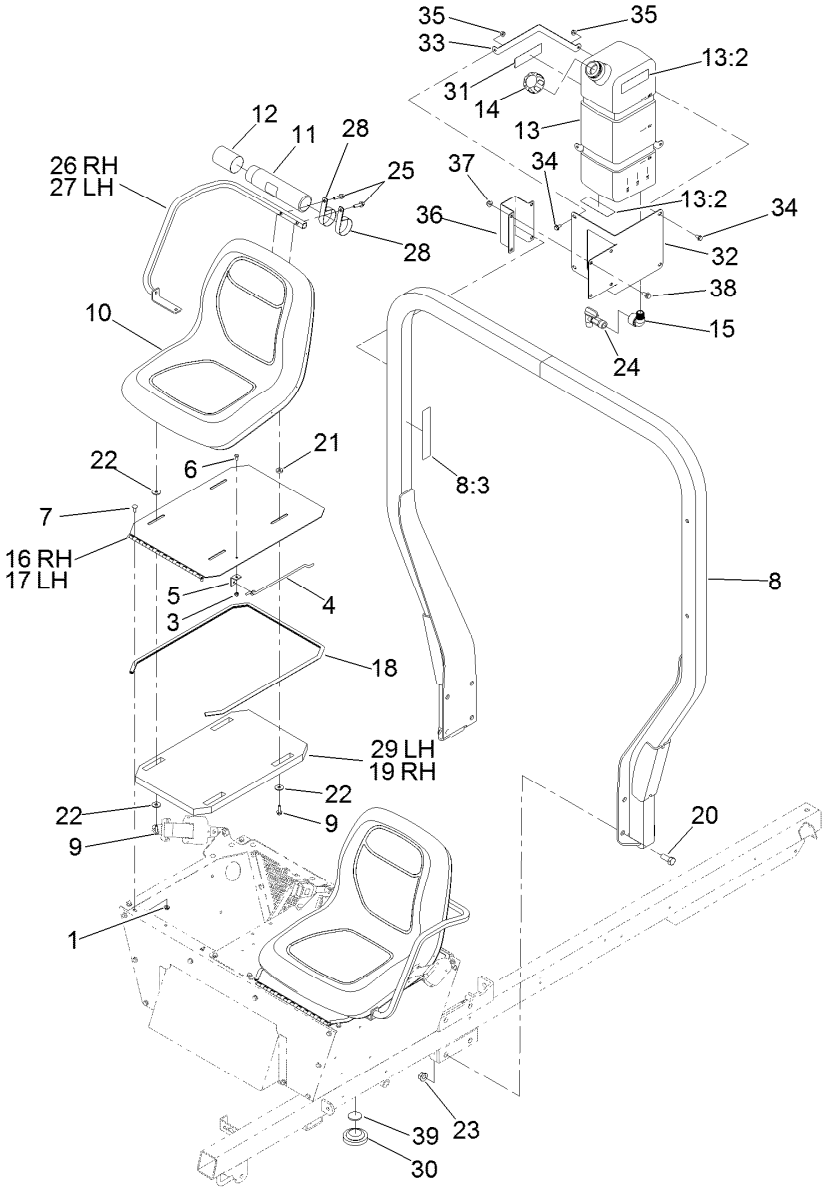


# Seat, Fresh Water Tank and Roll-Over Protection System Assembly

| Ref. | Part Number | Qty. | Description |
|---|---|---|---|
| 1 | 32128-20 | 4 | Nut-HF |
| 3 | 3296-42 | 2 | Nut-Lock, NI |
| 4 | 94-7204 | 2 | Rod-Prop, Seat |
| 5 | 94-7203 | 2 | Bracket |
| 6 | 321-3 | 2 | Screw-HH |
| 7 | 3230-23 | 4 | Screw-CARR |
| 8 | 119-0589 | 1 | ROPS ASM |
| 8:3 | 117-4955 | 1 | Decal-Danger, ROPS (CE) |
| 9 | 33104-025 | 8 | Screw-HHF |
| 10 | 112-2923 | 2 | Seat ASM |
| 11 | 104-7050 | 1 | Tube-Manual |
| 12 | 104-7048 | 1 | Cap-Housing |
| 13 | 132-7745 | 1 | Fresh Water Tank ASM |
| 13:2 | 120-0616 | 3 | Decal-Water, Fresh |
| 14 | 106-5052 | 1 | Cap-Water, Fresh |
| 15 | 132-7706 | 1 | Elbow-90DEG |
| 16 | 108-3289-03 | 1 | Panel-Seat, RH |
| 17 | 132-7664-03 | 1 | Panel-Seat, LH |
| 18 | 94-7085 | 2 | Trim |

| Ref. | Part Number | Qty. | Description |
|---|---|---|---|
| 19 | 108-3290 | 1 | Barrier-Noise, Seat |
| 20 | 327-4 | 8 | Screw-HH |
| 21 | 7-0081 | 6 | Washer-Flat |
| 22 | 52-2861 | 10 | Washer |
| 23 | 32128-50 | 8 | Nut-Flange |
| 24 | 100-7011 | 1 | Spigot-90 DEG |
| 25 | 33104-035 | 4 | Screw-HHF |
| 26 | 119-0732-03 | 1 | Armrest-RH |
| 27 | 119-0731-03 | 1 | Armrest-LH |
| 28 | 2412-133 | 2 | Clamp-R |
| 29 | 132-7666 | 1 | Barrier-Noise, Seat |
| 30 | 100-3524 | 1 | Switch-Seat |
| 31 | 120-0616 | 1 | Decal-Water, Fresh |
| 32 | 132-5619-03 | 1 | Mount-Tank, Eye Wash |
| 33 | 132-7628-03 | 2 | Band-Tank, Eye Wash |
| 34 | 3234-7 | 4 | Screw-HHF |
| 35 | 104-8300 | 4 | Nut-HF, NI |
| 36 | 132-7627-03 | 1 | Clamp-Bracket, Fresh Water Tank |

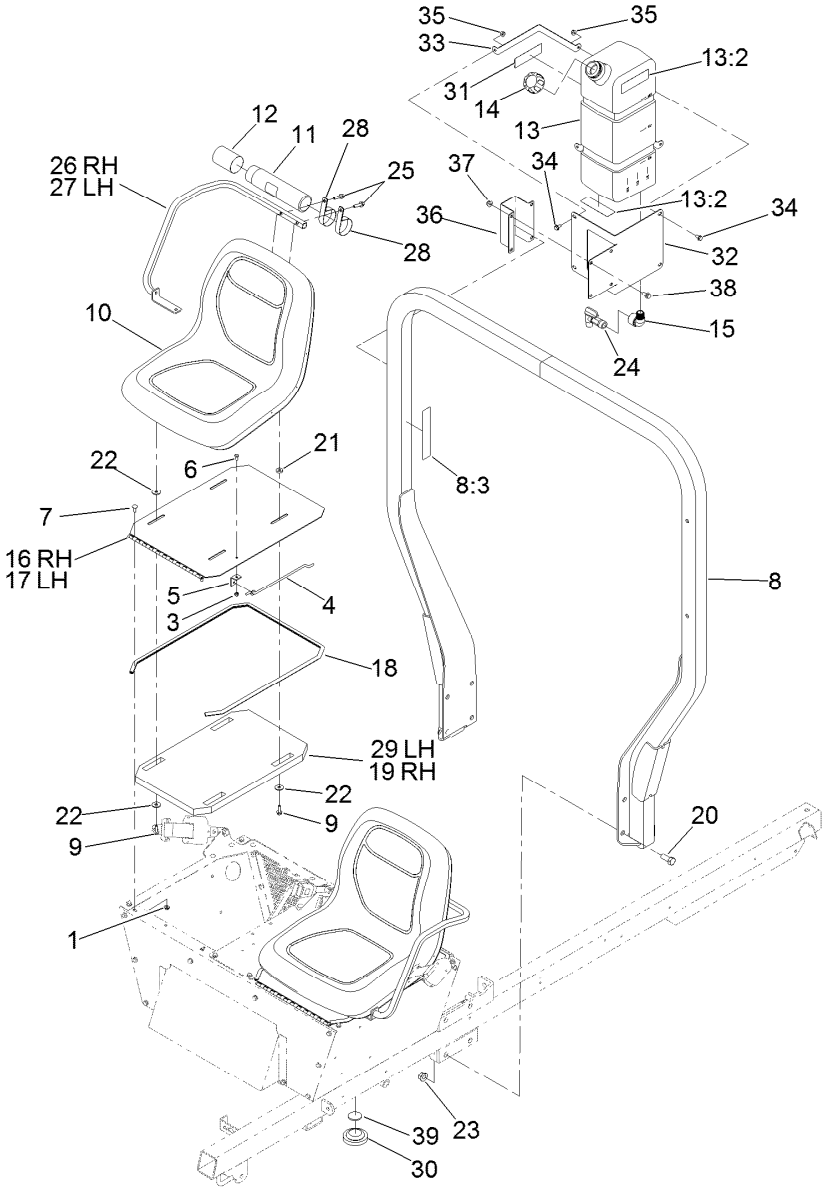


# Seat, Fresh Water Tank and Roll-Over Protection System Assembly (continued)

| Ref. | Part Number | Qty. | Description |
|---|---|---|---|
| 37 | 104-8301 | 4 | Nut-HF, NI |
| 38 | 3234-1 | 4 | Screw-HHF |
| 39 | 133-2797 | 1 | Disc-Plunger |

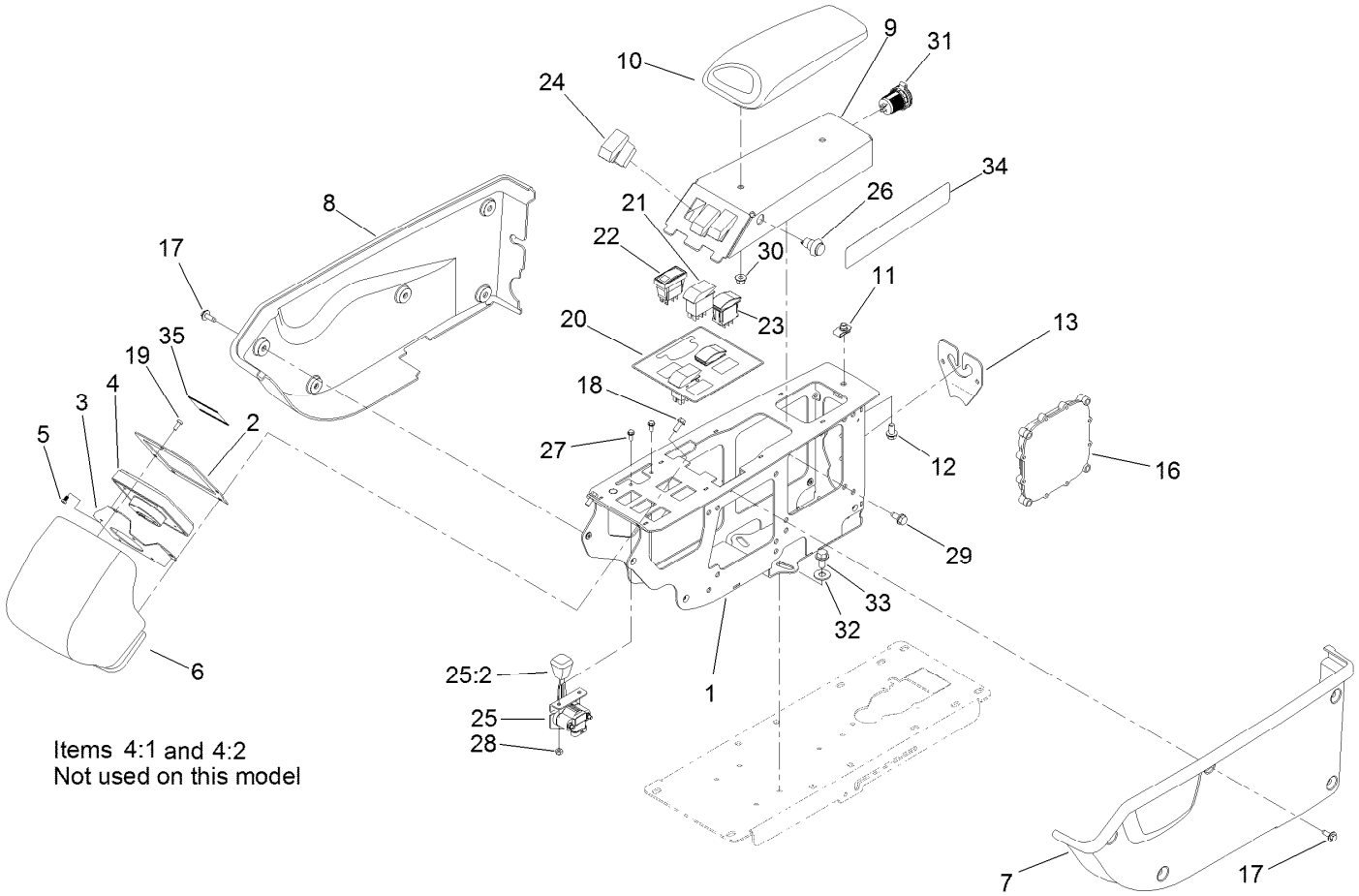


# Control Console Assembly

| Ref. | Part Number | Qty. | Description |
|---|---|---|---|
| 1 | 132-5640-03 | 1 | Frame-Console |
| 2 | 132-7615-03 | 1 | Plate-Monitor |
| 3 | 132-7610-03 | 1 | Retainer-Monitor |
| 4 | 125-5320 | 1 | Infocenter |
| 4:1 | 115-8884 | 4 | Nut-Thumb |
| 4:2 | 115-8885 | 4 | Stud |
| 5 | 132-7668 | 4 | Screw-PPH |
| 6 | 132-7617 | 1 | Hood-Console |
| 7 | 132-7611 | 1 | Cover-LH |
| 8 | 132-7612 | 1 | Cover-RH |
| 9 | 132-5645-03 | 1 | Panel-Arm |
| 10 | 131-9637 | 1 | Armrest-Quick Find |
| 11 | 112-3306 | 1 | Nut |
| 12 | 3234-14 | 1 | Screw-HHF |
| 13 | 132-7704-03 | 1 | Retainer-Harness, Console |
| 16 | 114-3321 | 1 | Controller-Tec |
| 17 | 119-4012 | 12 | Screw-HWHTF |
| 18 | 32144-85 | 2 | Screw-HWH |
| 19 | 3250-12 | 3 | Screw-PPH |

| Ref. | Part Number | Qty. | Description |
|---|---|---|---|
| 20 | 132-7695 | 1 | Decal-Console |
| 21 | 100-8490 | 2 | Switch-Rocker, On-None-On |
| 22 | 104-9007 | 1 | Switch-Rocker |
| 23 | 100-1535 | 2 | Switch |
| 24 | 95-8999 | 3 | Switch |
| 25 | 122-0111 | 1 | Throttle-Electronic |
| 25:2 | 66-0120 | 1 | Knob |
| 26 | 125-7996 | 1 | Switch-Pb, Momentary |
| 27 | 3290-321 | 2 | Screw-HWH |
| 28 | 3296-2 | 2 | Nut-Lock, NI |
| 29 | 32144-70 | 4 | Screw-HWHTF |
| 30 | 104-8300 | 2 | Nut-HF, NI |
| 31 | 131-8388 | 1 | Socket-USB |
| 32 | 3256-4 | 3 | Washer-Flat |
| 33 | 110-9380 | 3 | Screw-HWH |
| 34 | 132-7786 | 1 | Decal-Quickfind |
| 35 | 114-5554 | 1 | Decal-Center, Info |

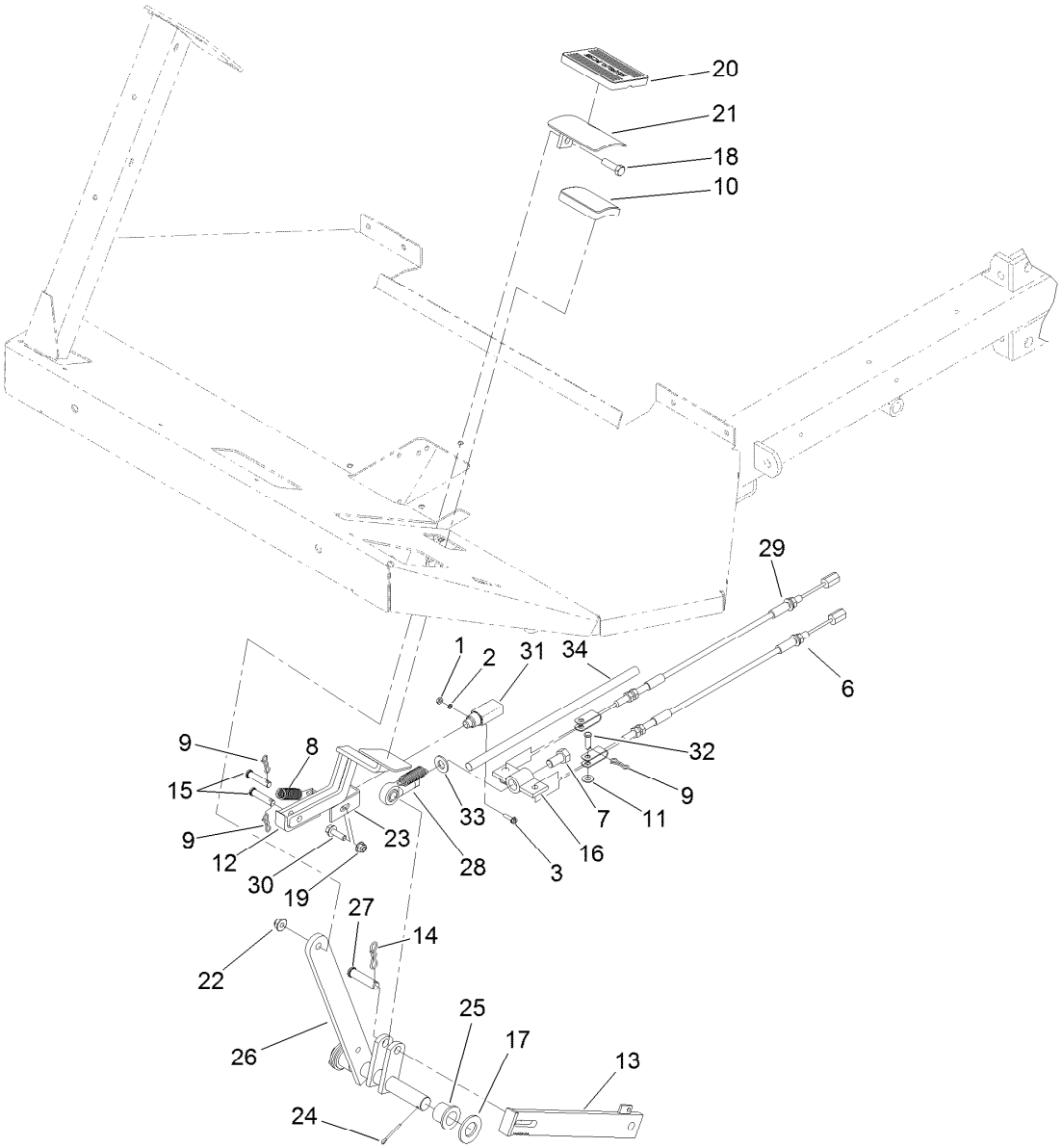


# Brake Pedal Assembly

| Ref. | Part Number | Qty. | Description |
|---|---|---|---|
| 1 | 3217-26 | 2 | Nut-Hex |
| 2 | 3253-17 | 2 | Washer-Lock |
| 3 | 32105-13 | 2 | Screw-HWH |
| 6 | 119-9364 | 1 | Cable-Brake, LH |
| 7 | 3213-1 | 1 | Screw-HH |
| 8 | 92-0417 | 2 | Spring-EXT |
| 9 | 119-1415 | 4 | Pin-Cotter, Locking |
| 10 | 42719 | 1 | Pad-Pedal |
| 11 | 3256-23 | 2 | Washer-Plain |
| 12 | 93-6599-03 | 1 | Catch |
| 13 | 93-6598-03 | 1 | Strap-Brake |
| 14 | 119-1416 | 1 | Pin-Cotter, Locking |
| 15 | 283-15 | 2 | Pin-Clevis |
| 16 | 93-6595 | 1 | Equalizer-Brake |
| 17 | 3256-29 | 3 | Washer-Flat |
| 18 | 323-7 | 1 | Screw-HH |

| Ref. | Part Number | Qty. | Description |
|---|---|---|---|
| 19 | 104-8300 | 1 | Nut-HF, NI |
| 20 | 7-3900 | 1 | Pad-Brake |
| 21 | 100-8422-03 | 1 | Bracket-Pedal |
| 22 | 104-8301 | 1 | Nut-HF, NI |
| 23 | 93-6592-03 | 1 | Bracket |
| 24 | 3272-12 | 2 | Pin-Cotter |
| 25 | 94-7164 | 2 | Bearing |
| 26 | 93-6589 | 1 | Shaft-Brake |
| 27 | 42195 | 1 | Pin-Clevis |
| 28 | 522087 | 1 | Rod-End |
| 29 | 119-9365 | 1 | Cable-Brake, RH |
| 30 | 3234-17 | 1 | Screw-HHF |
| 31 | 99-7407 | 1 | Switch |
| 32 | 283-58 | 2 | Pin-Clevis |
| 33 | 3256-26 | 1 | Washer-Flat |
| 34 | 130-7176 | 1 | Sleeve-Thermal, Wrap |

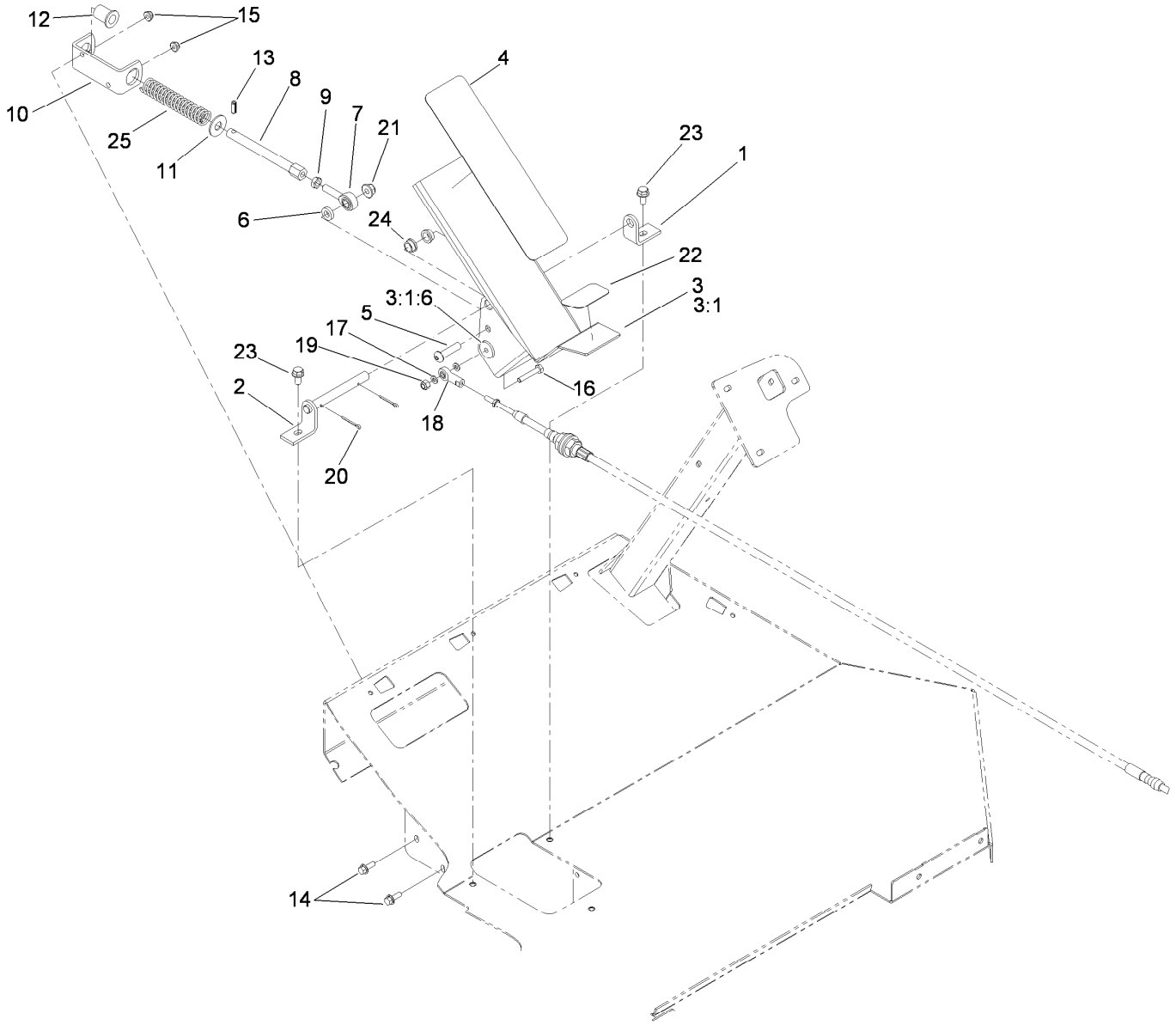


# Traction Pedal Assembly

| Ref. | Part Number | Qty. | Description |
|---|---|---|---|
| 1 | 92-0450-03 | 1 | Bracket-Pin |
| 2 | 92-0448 | 1 | Pin-Pivot |
| 3 | 106-5247-03 | 1 | Traction Pedal ASM |
| 3:1 | | 1 | Pedal-Traction ● |
| 3:1:6 | 106-5248 | 1 | Spacer |
| 4 | 71-0440 | 1 | Abrasive-Pedal |
| 5 | 95-3857 | 1 | Screw-HSBH |
| 6 | 80-7730 | 1 | Spacer |
| 7 | 2411-36 | 1 | Bearing-End, Rod |
| 8 | 92-7609 | 1 | Shaft-Spring |
| 9 | 3220-3 | 1 | Nut-HJ |
| 10 | 92-7608-03 | 1 | Bracket-Spring |
| 11 | 3256-5 | 1 | Washer-Flat |
| 12 | 92-7610 | 1 | Retainer-Spring |

| Ref. | Part Number | Qty. | Description |
|---|---|---|---|
| 13 | 32121-11 | 1 | Pin-Roll |
| 14 | 3234-4 | 2 | Screw-HHF |
| 15 | 104-7201 | 2 | Nut-HF |
| 16 | 321-9 | 1 | Screw-HH |
| 17 | 33093-00 | 2 | Washer-Flat |
| 18 | 2411-41 | 1 | Rod End-Ball Joint |
| 19 | 3296-42 | 1 | Nut-Lock, NI |
| 20 | 3272-7 | 2 | Pin-Cotter |
| 21 | 104-8301 | 1 | Nut-HF, NI |
| 22 | 71-0450 | 1 | Abrasive-Pedal, Rear |
| 23 | 3234-14 | 2 | Screw-HHF |
| 24 | 256-156 | 2 | Bushing-Flange |
| 25 | 84-9100 | 1 | Spring |

● Not serviced separately

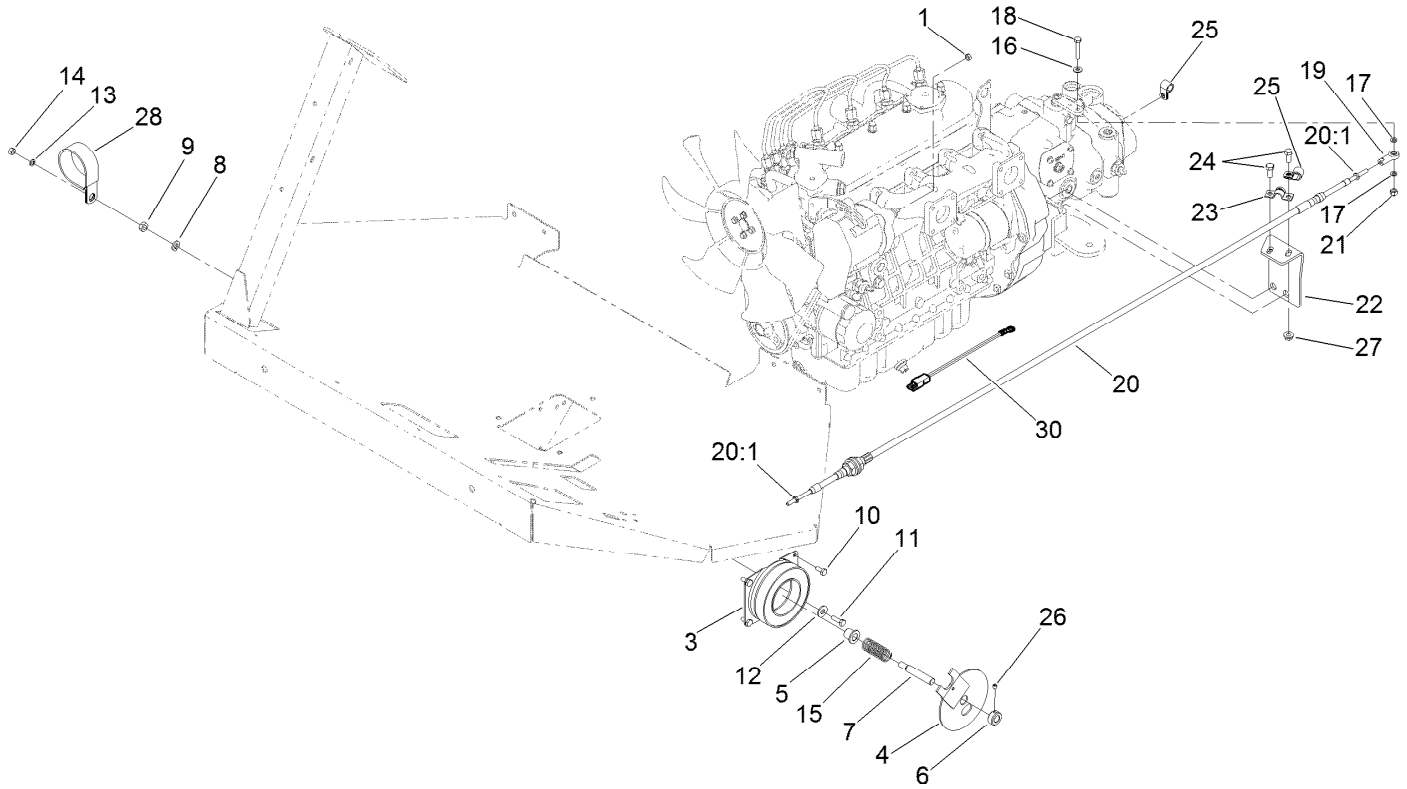


# Throttle Assembly

| Ref. | Part Number | Qty. | Description |
|---|---|---|---|
| 1 | 33013-00 | 1 | Nut-Hex |
| 3 | 42-1720 | 1 | Core-Field, Coil |
| 4 | 43-6110-03 | 1 | Plate-Clutch |
| 5 | 256-273 | 1 | Bushing-Flange |
| 6 | 43-6320 | 1 | Collar |
| 7 | 69-9170 | 1 | Shaft-Cruise |
| 8 | 3253-5 | 1 | Washer-Lock |
| 9 | 3217-7 | 1 | Nut-Hex |
| 10 | 321-3 | 3 | Screw-HH |
| 11 | 321-5 | 1 | Screw-HH |
| 12 | 3256-3 | 1 | Washer-Flat |
| 13 | 3253-3 | 4 | Washer-Lock |
| 14 | 3217-5 | 4 | Nut-Hex |
| 15 | 43-6200 | 1 | Spring-Compression |
| 16 | 3256-22 | 1 | Washer-Flat |

| Ref. | Part Number | Qty. | Description |
|---|---|---|---|
| 17 | 33093-00 | 2 | Washer-Flat |
| 18 | 321-9 | 1 | Screw-HH |
| 19 | 2411-41 | 1 | Rod End-Ball Joint |
| 20 | 106-5233 | 1 | Cable-Traction |
| 20:1 | 3220-1 | 2 | Nut-Jam |
| 21 | 3296-42 | 1 | Nut-Lock, NI |
| 22 | 119-9359 | 1 | Bracket-Cable, Rear |
| 23 | 93-2092 | 1 | Clamp-Cable |
| 24 | 322-3 | 2 | Screw-HH |
| 25 | 2412-93 | 2 | Clamp-R |
| 26 | 3245-32 | 1 | Screw-HSH |
| 27 | 32128-20 | 2 | Nut-HF |
| 28 | 2412-102 | 1 | Clamp-R |
| 30 | 108-9455 | 1 | Harness-Wire, Fusible Link |

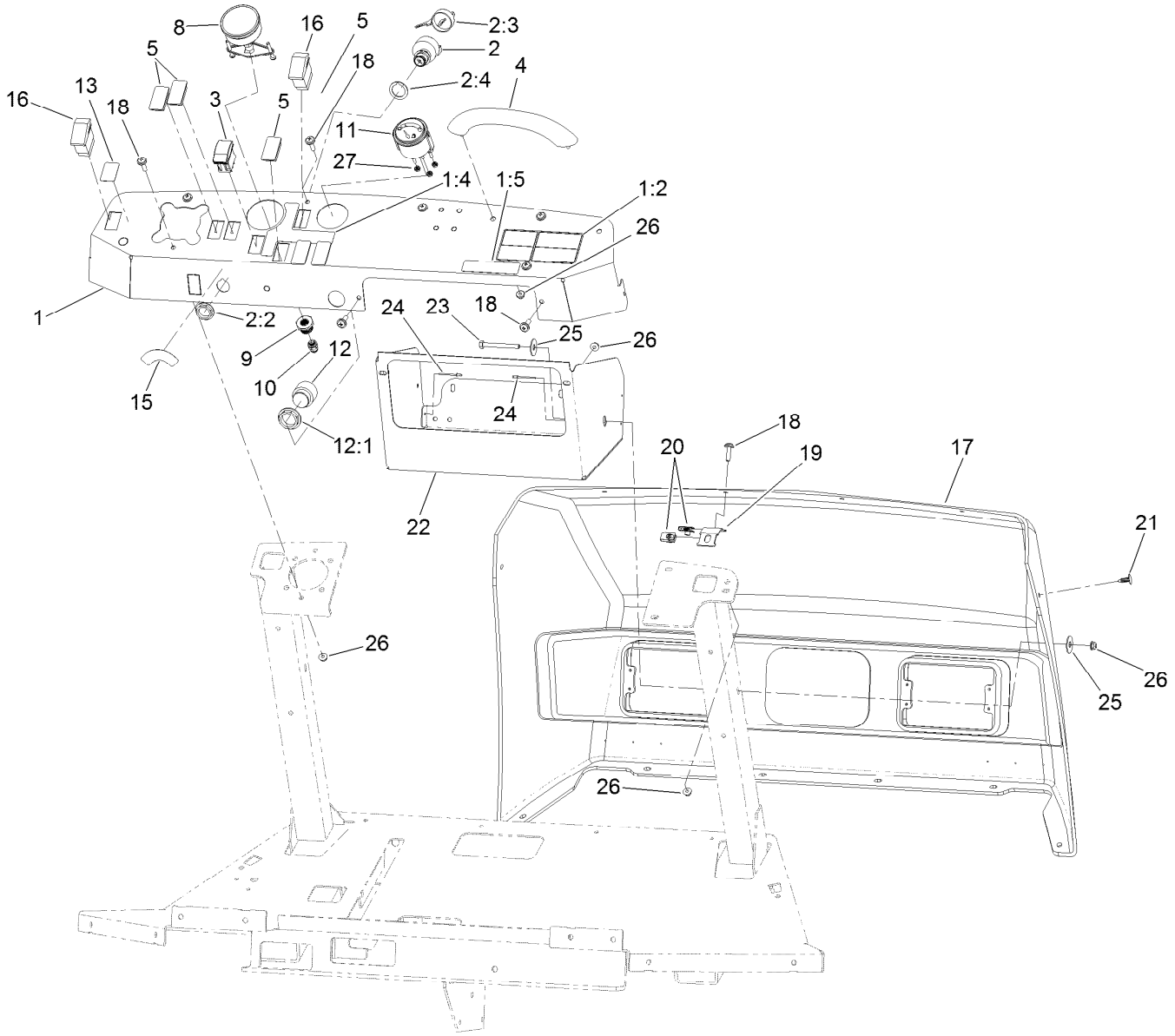


# Dash Panel Assembly

| Ref. | Part Number | Qty. | Description |
|---|---|---|---|
| 1 | 132-7690 | 1 | Dash Panel ASM |
| 1:2 | 120-0624 | 1 | Decal-Warning, Passenger |
| 1:4 | 132-7689 | 1 | Decal-Switch |
| 1:5 | 117-2718 | 1 | Decal-Arrester, Spark |
| 2 | 106-5269 | 1 | Ignition Switch ASM |
| 2:2 | 108-8660 | 1 | Nut-Mounting |
| 2:3 | 106-5270 | 1 | Ignition Key Set |
| 2:4 | 108-8659 | 1 | Washer-Backup |
| 3 | 100-1535 | 1 | Switch |
| 4 | 117-4948 | 1 | Handle-Grab |
| 5 | 99-7420 | 5 | Plug-Hole |
| 8 | 120-8546 | 1 | Gauge-Pressure |
| 9 | 100-8665 | 1 | Reducer-Gauge, Pressure |
| 10 | 100-8667 | 1 | Coupler-Reducer |
| 11 | 132-7614 | 1 | Gauge-Fuel |
| 12 | 80-9330 | 1 | Audio Alarm ASM |

| Ref. | Part Number | Qty. | Description |
|---|---|---|---|
| 12:1 | 104-5107 | 1 | Nut-Plastic, Knurled |
| 13 | 132-7708 | 1 | Decal-Lights, Horn |
| 15 | 132-7783 | 1 | Decal-Ignition Switch, Gas |
| 16 | 95-8999 | 2 | Switch |
| 17 | 117-0793 | 1 | Hood |
| 18 | 110-9361 | 12 | Screw-PPH |
| 19 | 117-0735 | 4 | Bracket-Hood |
| 20 | 107069 | 8 | Clip |
| 21 | 117-2382 | 2 | Plug-Plastic |
| 22 | 136-0426-03 | 1 | Compartment-Storage |
| 23 | 321-15 | 1 | Screw-HH |
| 24 | 3269-32 | 3 | Rivet-Pop |
| 25 | 52-2860 | 2 | Washer |
| 26 | 104-7201 | 7 | Nut-HF |
| 27 | 363-1483 | 3 | Nut-Hex, K Lock |

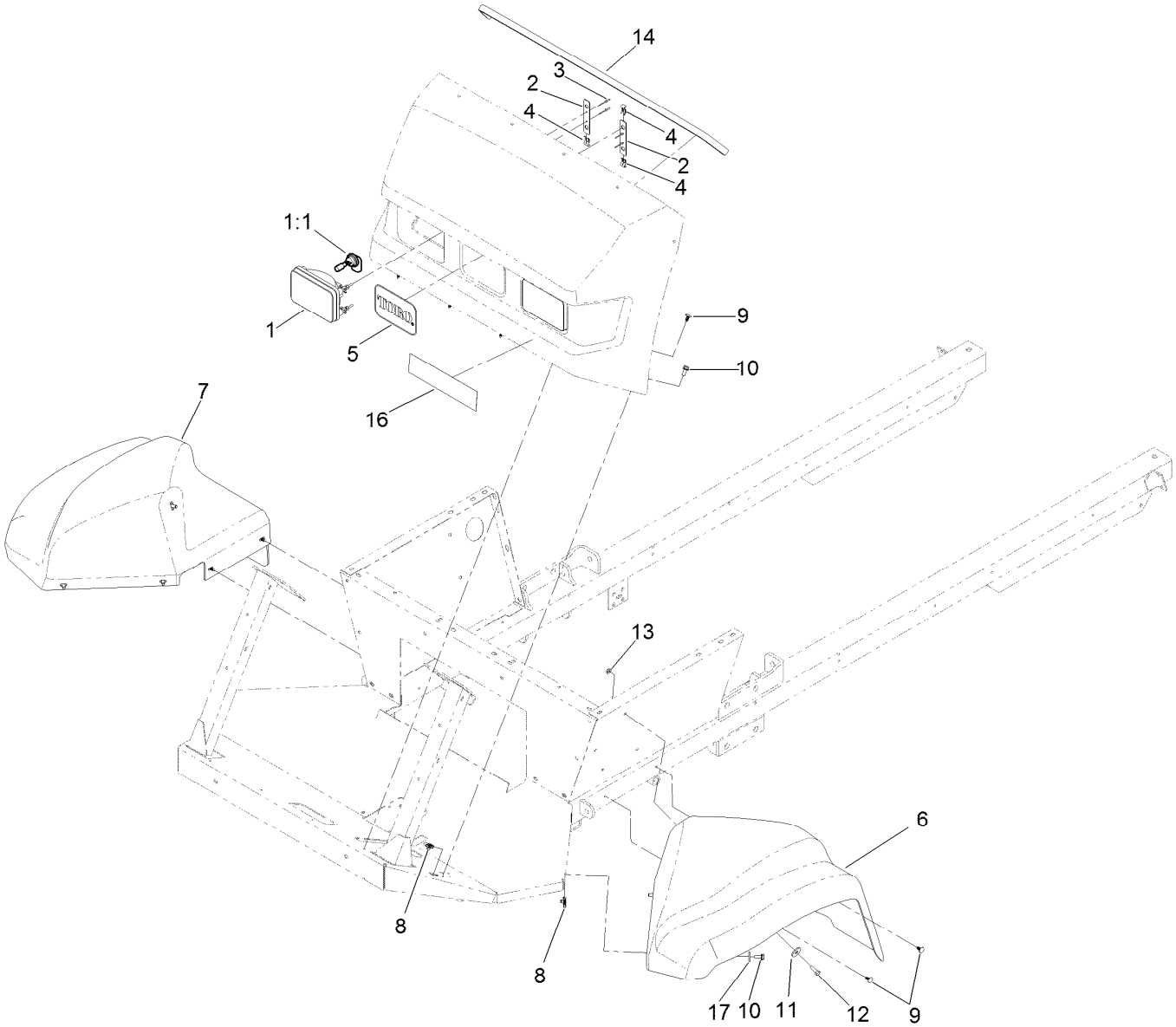


# Hood and Fender Assembly

| Ref. | Part Number | Qty. | Description |
|---|---|---|---|
| 1 | 132-6703 | 2 | Headlight ASM |
| 1:1 | 115-2395 | 1 | Bulb-Light |
| 2 | 117-5832 | 4 | Bracket-Headlight |
| 3 | 3290-274 | 8 | Rivet-Pop |
| 4 | 115-2408 | 6 | Clip-Speed |
| 5 | 62-5550 | 1 | Decal |
| 6 | 119-0417 | 1 | Fender |
| 7 | 119-0418 | 1 | Fender |
| 8 | 94-2413 | 6 | Nut-U |

| Ref. | Part Number | Qty. | Description |
|---|---|---|---|
| 9 | 117-2382 | 8 | Plug-Plastic |
| 10 | 3234-47 | 6 | Screw-HHF |
| 11 | 63-8410 | 2 | Washer |
| 12 | 322-5 | 2 | Screw-HH |
| 13 | 32128-20 | 2 | Nut-HF |
| 14 | 119-0504 | 1 | Trim-Hood |
| 16 | 131-3309 | 1 | Decal |
| 17 | 3256-82 | 4 | Washer-Flat |

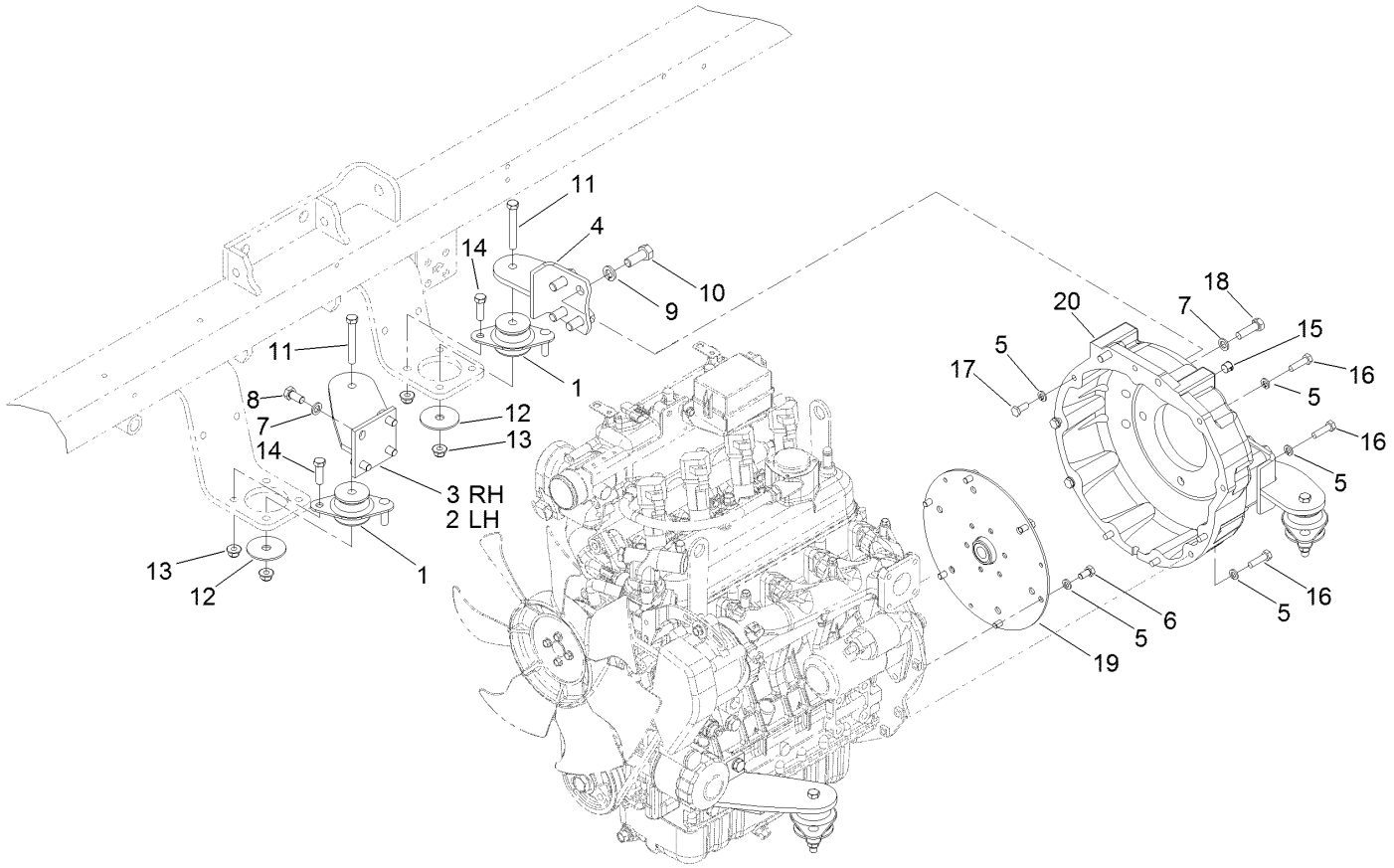


# Engine Mounting and Bell Housing Assembly

| Ref. | Part Number | Qty. | Description |
|---|---|---|---|
| 1 | 131-1821 | 4 | Mount-Engine |
| 2 | 117-0667-03 | 1 | Bracket-LH |
| 3 | 117-0666-03 | 1 | Bracket-RH |
| 4 | 117-0669-03 | 2 | Bracket-Mount, Rear |
| 5 | 3253-4 | 15 | Washer-Lock |
| 6 | 99-5132 | 6 | Bolt |
| 7 | 48-9590 | 10 | Washer-Lock |
| 8 | 63-7790 | 8 | Screw-Cap |
| 9 | 3253-7 | 8 | Washer-Lock |
| 10 | 325-5 | 8 | Screw-HH |

| Ref. | Part Number | Qty. | Description |
|---|---|---|---|
| 11 | 323-13 | 4 | Screw-HH |
| 12 | 87-5100 | 4 | Washer-Snubbing |
| 13 | 104-8301 | 12 | Nut-HF, NI |
| 14 | 323-7 | 8 | Screw-HH |
| 15 | 119-6039 | 2 | Plug-Plastic |
| 16 | 33114-030 | 6 | Screw-HH |
| 17 | 33114-020 | 3 | Screw-HH |
| 18 | 56-2140 | 2 | Screw-HH |
| 19 | 92-0285 | 1 | Coupling ASM |
| 20 | 105-0100 | 1 | Housing-Flywheel |

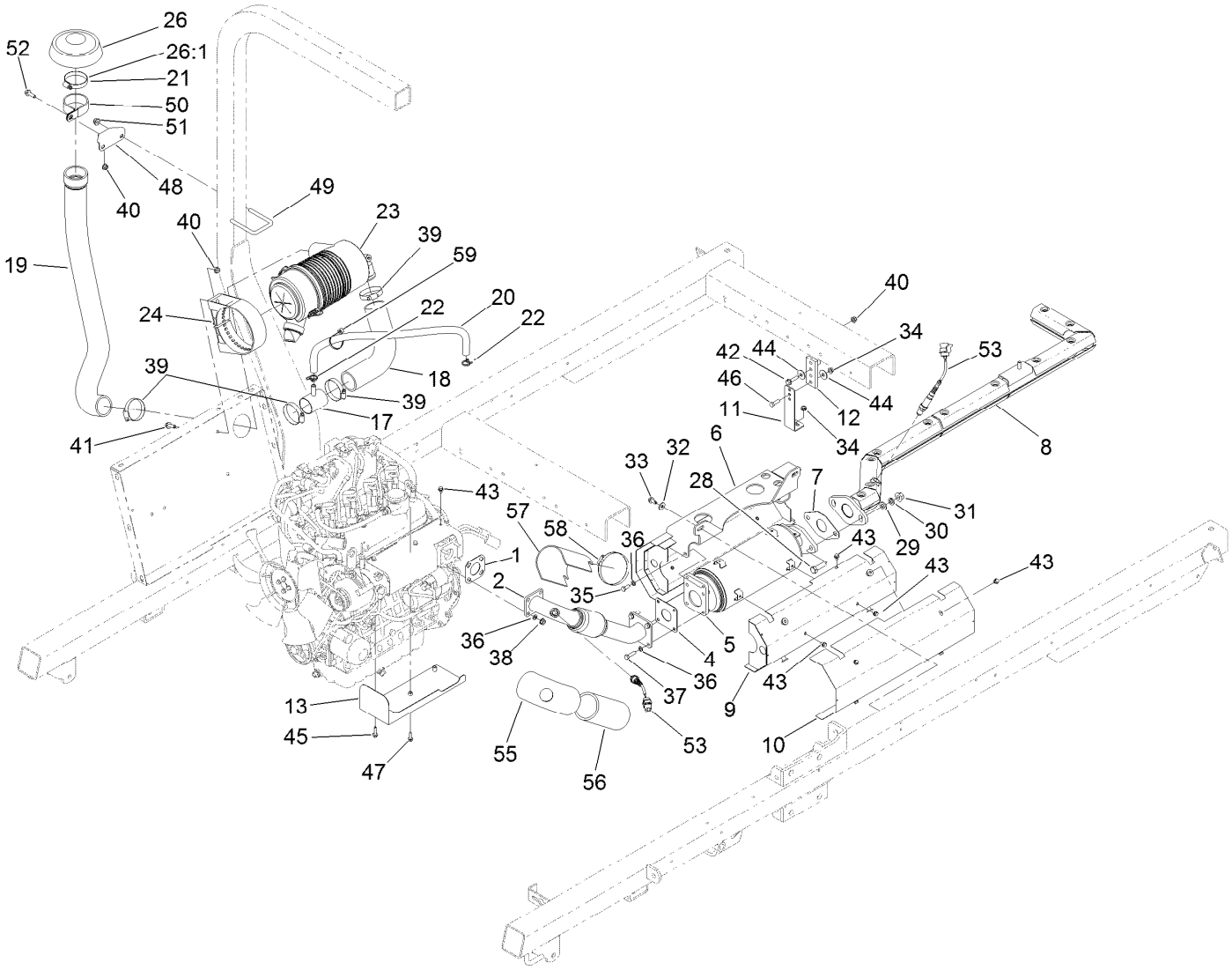


# Muffler and Air Cleaner Assembly

| Ref. | Part Number | Qty. | Description |
|---|---|---|---|
| 1 | 121-5589 | 1 | Gasket-Manifold, Exhaust |
| 2 | 131-5773 | 1 | Pipe-Header |
| 4 | 121-5590 | 1 | Gasket-Manifold, Outlet |
| 5 | 133-2788 | 1 | Catalyst |
| 6 | 127-8935 | 1 | Bracket-Mount, Exhaust |
| 7 | 121-5591 | 1 | Gasket-Outlet, Catalyst |
| 8 | 130-7333 | 1 | Pipe-Tail |
| 9 | 130-7228 | 2 | Shield-Muffler, Inner |
| 10 | 130-7208 | 2 | Shield-Muffler, Outer |
| 11 | 120-8557 | 1 | Bracket-Hanger |
| 12 | 117-0744 | 1 | Hanger-Muffler |
| 13 | 130-7206 | 1 | Shield-Manifold, Bottom |
| 17 | 120-5552 | 1 | Vent |
| 18 | 130-7098 | 1 | Hose-Intake |
| 19 | 136-2267 | 1 | Hose-Air Cleaner |
| 20 | 131-5841 | 1 | Hose-Overflow |
| 21 | 2412-42 | 1 | Clamp-Hose |
| 22 | 117-1193 | 2 | Clamp-Hose |
| 23 | 106-5277 | 1 | Air Cleaner ASM |
| 24 | 98-4525 | 1 | Bracket-Cleaner, Air |
| 26 | 105-2539 | 1 | Cap |

| Ref. | Part Number | Qty. | Description |
|---|---|---|---|
| 26:1 | 2412-130 | 1 | Clamp-Hose |
| 28 | 33116-040 | 2 | Screw-HH |
| 29 | 33096-00 | 2 | Washer-Flat |
| 30 | 48-8070 | 2 | Washer-Lock |
| 31 | 33006-00 | 2 | Nut-HF |
| 32 | 3256-3 | 2 | Washer-Flat |
| 33 | 32104-32 | 2 | Screw-HWH |
| 34 | 32128-25 | 2 | Nut-HF |
| 35 | 33114-020 | 4 | Screw-HH |
| 36 | 3253-4 | 12 | Washer-Lock |
| 37 | 33114-030 | 4 | Screw-HH |
| 38 | 33004-00 | 8 | Nut-HF |
| 39 | 2412-130 | 4 | Clamp-Hose |
| 40 | 104-8300 | 4 | Nut-HF, NI |
| 41 | 3234-17 | 2 | Screw-HHF |
| 42 | 119-4036 | 1 | Screw-HHF |
| 43 | 81-1280 | 16 | Screw-HHF |
| 44 | 52-2860 | 2 | Washer |
| 45 | 33103-025 | 2 | Screw-HHF |
| 46 | 322-5 | 1 | Screw-HH |
| 47 | 110-3986 | 1 | Screw |

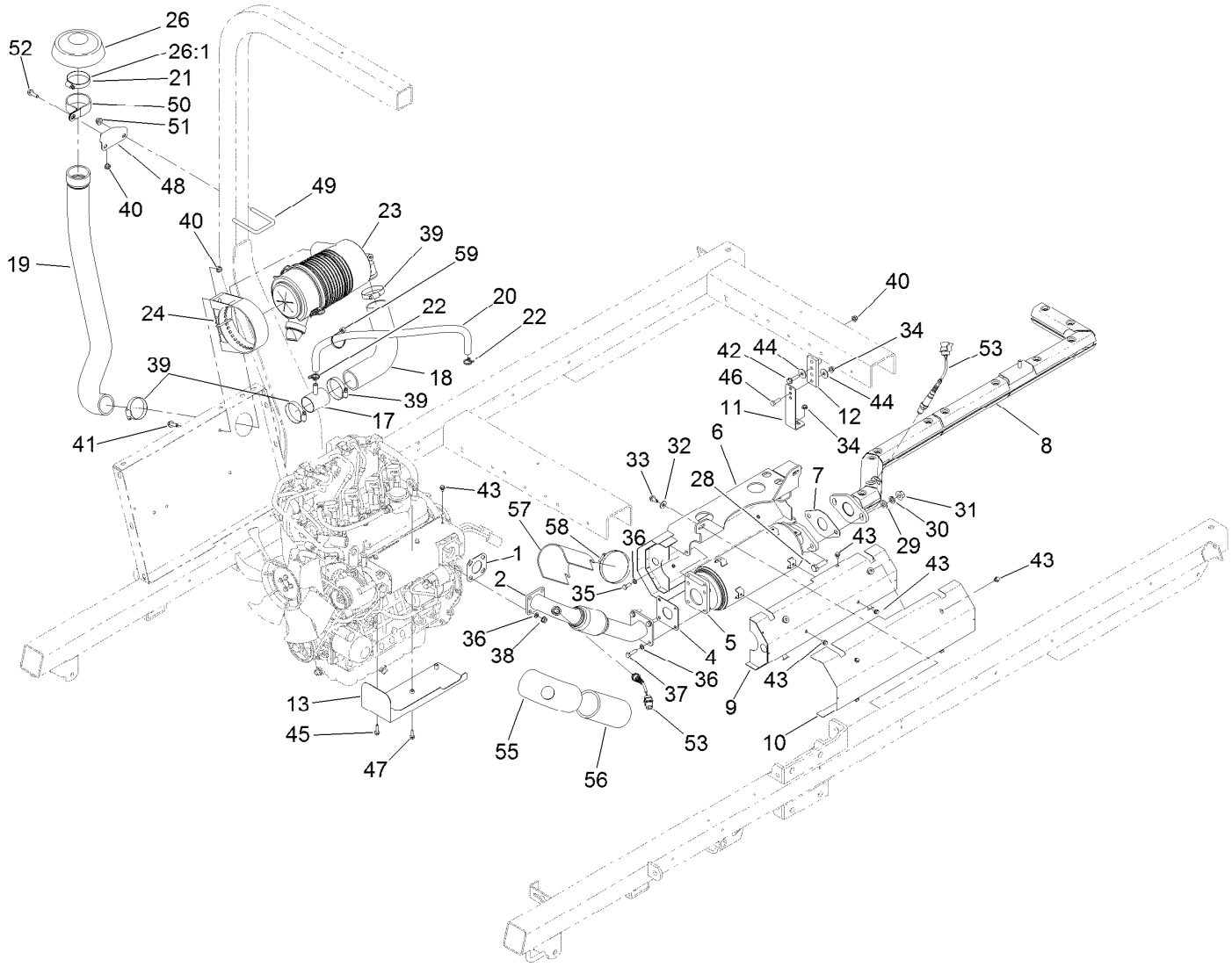


# Muffler and Air Cleaner Assembly (continued)

| Ref. | Part Number | Qty. | Description |
|---|---|---|---|
| 48 | 131-3319-03 | 1 | Bracket-Mount, Air Intake |
| 49 | 47-3460 | 1 | U-Bolt |
| 50 | 2412-102 | 1 | Clamp-R |
| 51 | 104-8301 | 2 | Nut-HF, NI |
| 52 | 3234-29 | 1 | Screw-HHF |
| 53 | 120-3832 | 2 | Sensor-Oxygen |

| Ref. | Part Number | Qty. | Description |
|---|---|---|---|
| 55 | 131-9600 | 1 | Jacket-Upper, Header |
| 56 | 131-9601 | 1 | Jacket-Lower, Header |
| 57 | 131-9598 | 1 | Shield-Composite |
| 58 | 2412-110 | 1 | Clamp-Band/Screw |
| 59 | 3290-378 | 1 | Tie-Cable |

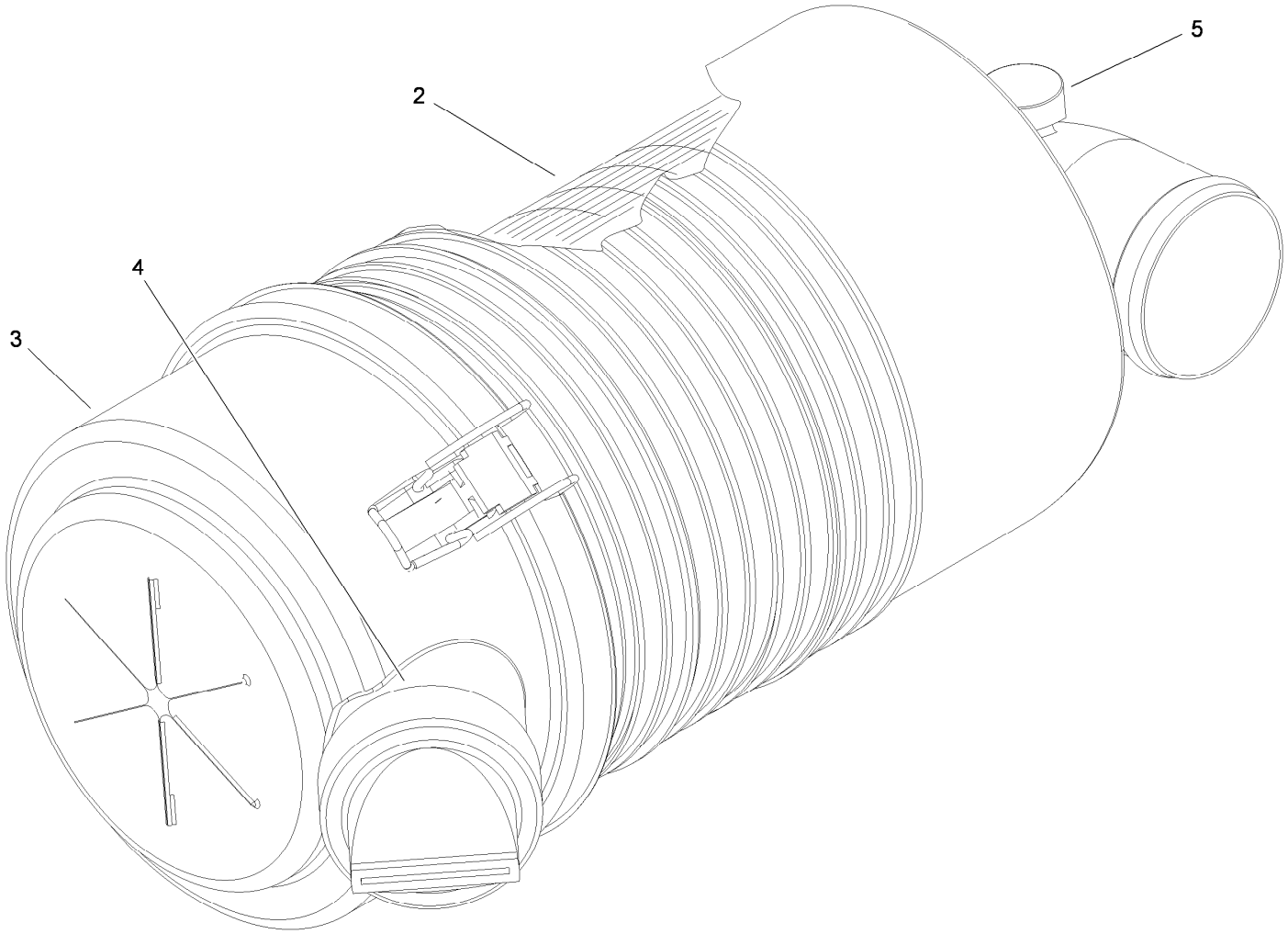


# Air Cleaner Assembly No. 106-5277

| *Ref.* | *Part Number* | *Qty.* | *Description* |
|---|---|---|---|
| 2 | 108-3810 | 1 | Filter-Air |
| 3 | 98-9771 | 1 | Cover ASM |
| 4 | 87-9400 | 1 | Valve-Vacuator |
| 5 | 285-17 | 1 | Plug-Pipe |

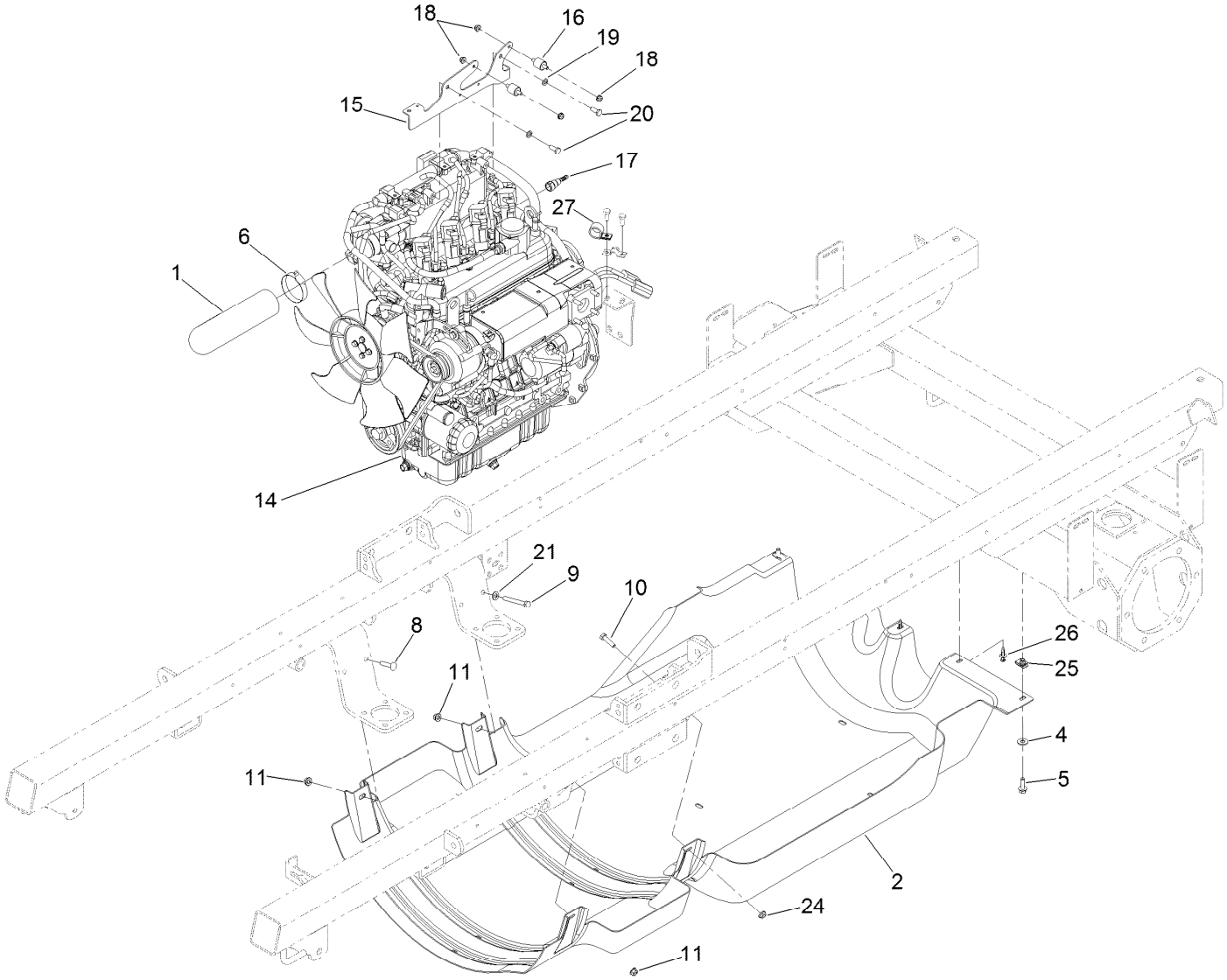


# Engine and Shroud Assembly

| Ref. | Part Number | Qty. | Description |
|---|---|---|---|
| 1 | 120-3841 | 1 | Hose-Cleaner, Air |
| 2 | 130-7177 | 1 | Shroud-Undercarriage |
| 4 | 3256-3 | 2 | Washer-Flat |
| 5 | 3234-29 | 2 | Screw-HHF |
| 6 | 2412-130 | 1 | Clamp-Hose |
| 8 | 33-5790 | 1 | Bolt-CARR |
| 9 | 322-13 | 1 | Screw-HH |
| 10 | 322-6 | 2 | Screw-HH |
| 11 | 104-8300 | 4 | Nut-HF, NI |
| 14 | 133-2790 | 1 | Engine-Kubota, Wg1605 |
| 15 | 132-7629-03 | 1 | Mount-Box, Fuse |

| Ref. | Part Number | Qty. | Description |
|---|---|---|---|
| 16 | 130-7174 | 2 | Mount-Isolation |
| 17 | 125-2921 | 1 | Fitting-Fuel |
| 18 | 104-7201 | 4 | Nut-HF |
| 19 | 3253-4 | 2 | Washer-Lock |
| 20 | 33114-020 | 2 | Screw-HH |
| 21 | 3256-23 | 1 | Washer-Plain |
| 24 | 32128-20 | 1 | Nut-HF |
| 25 | 94-2413 | 2 | Nut-U |
| 26 | 125-9622 | 3 | Rivet-Blind |
| 27 | 110-0824 | 1 | R-Clamp |

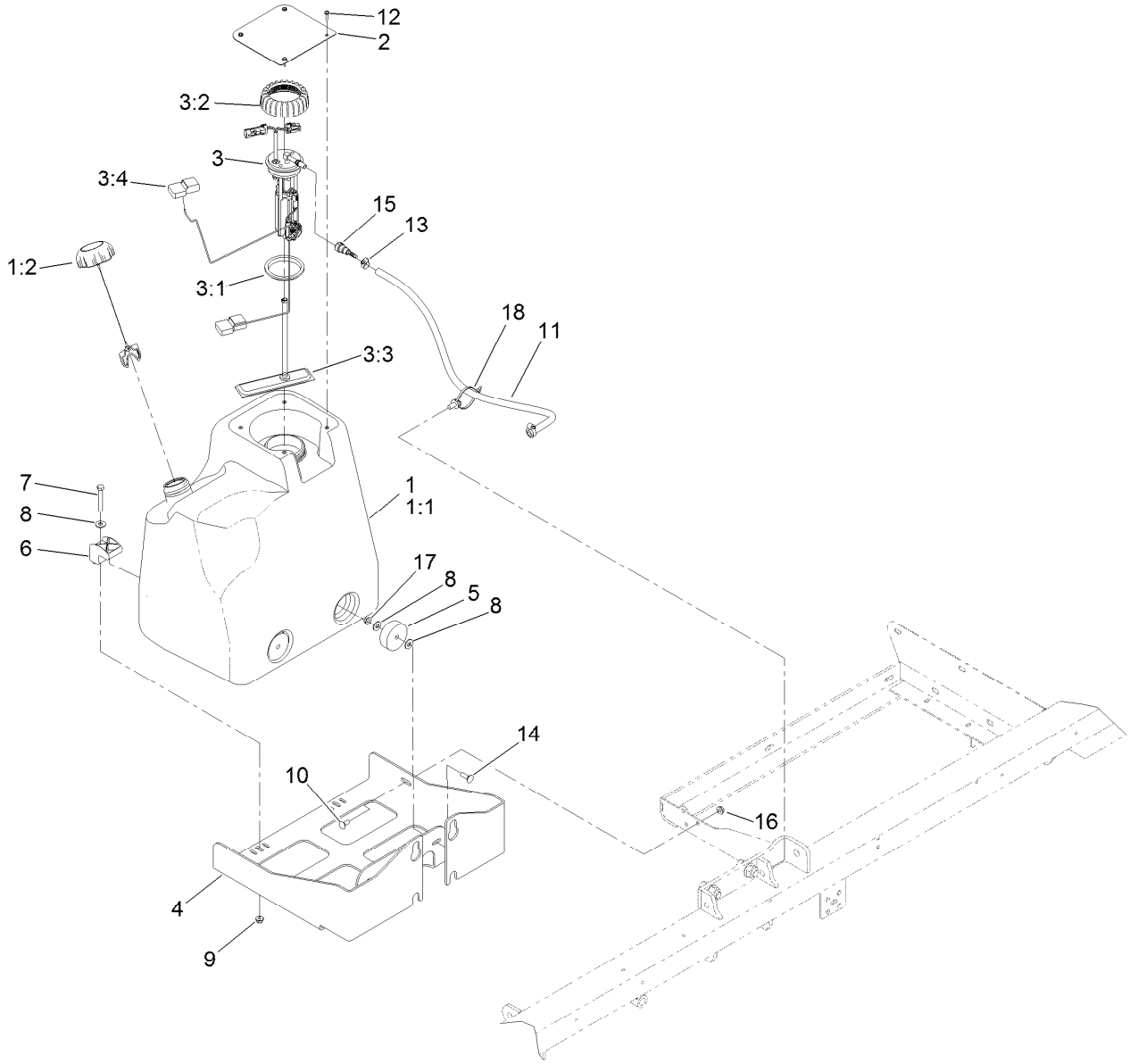


# Fuel Tank Assembly

| Ref. | Part Number | Qty. | Description |
|---|---|---|---|
| 1 | 130-7105 | 1 | Fuel Tank ASM |
| 1:1 | 125-5872 | 1 | Tank-Fuel |
| 1:2 | 136-2266 | 1 | Cap-Fuel, Dual Vent |
| 2 | 127-8971-03 | 1 | Cover-Tank, Fuel |
| 3 | 121-5641 | 1 | Pump-Fuel |
| 3:1 | 115-2163 | 1 | Gasket-Pump, Fuel |
| 3:2 | 115-2162 | 1 | Cap-Pump, Fuel |
| 3:3 | 125-2902 | 1 | Filter-Fuel |
| 3:4 | 120-4812 | 1 | Float |
| 4 | 131-9550-03 | 1 | Bracket-Tank, Fuel Tank |
| 5 | 108-1605 | 2 | Bumper-Recess |
| 6 | 107-4543 | 2 | Clamp |

| Ref. | Part Number | Qty. | Description |
|---|---|---|---|
| 7 | 322-11 | 2 | Screw-HH |
| 8 | 3256-3 | 6 | Washer-Flat |
| 9 | 104-8300 | 2 | Nut-HF, NI |
| 10 | 3230-1 | 1 | Bolt-CARR |
| 11 | 121-6321 | 1 | Hose-Fuel |
| 12 | 98-1375 | 4 | Screw-HWH |
| 13 | 2412-36 | 2 | Clamp-Hose |
| 14 | 3230-2 | 2 | Bolt-CARR |
| 15 | 125-2921 | 1 | Fitting-Fuel |
| 16 | 32128-20 | 1 | Nut-HF |
| 17 | 32128-25 | 2 | Nut-HF |
| 18 | 32180-031 | 1 | Clip-Tree (W/Tie) |

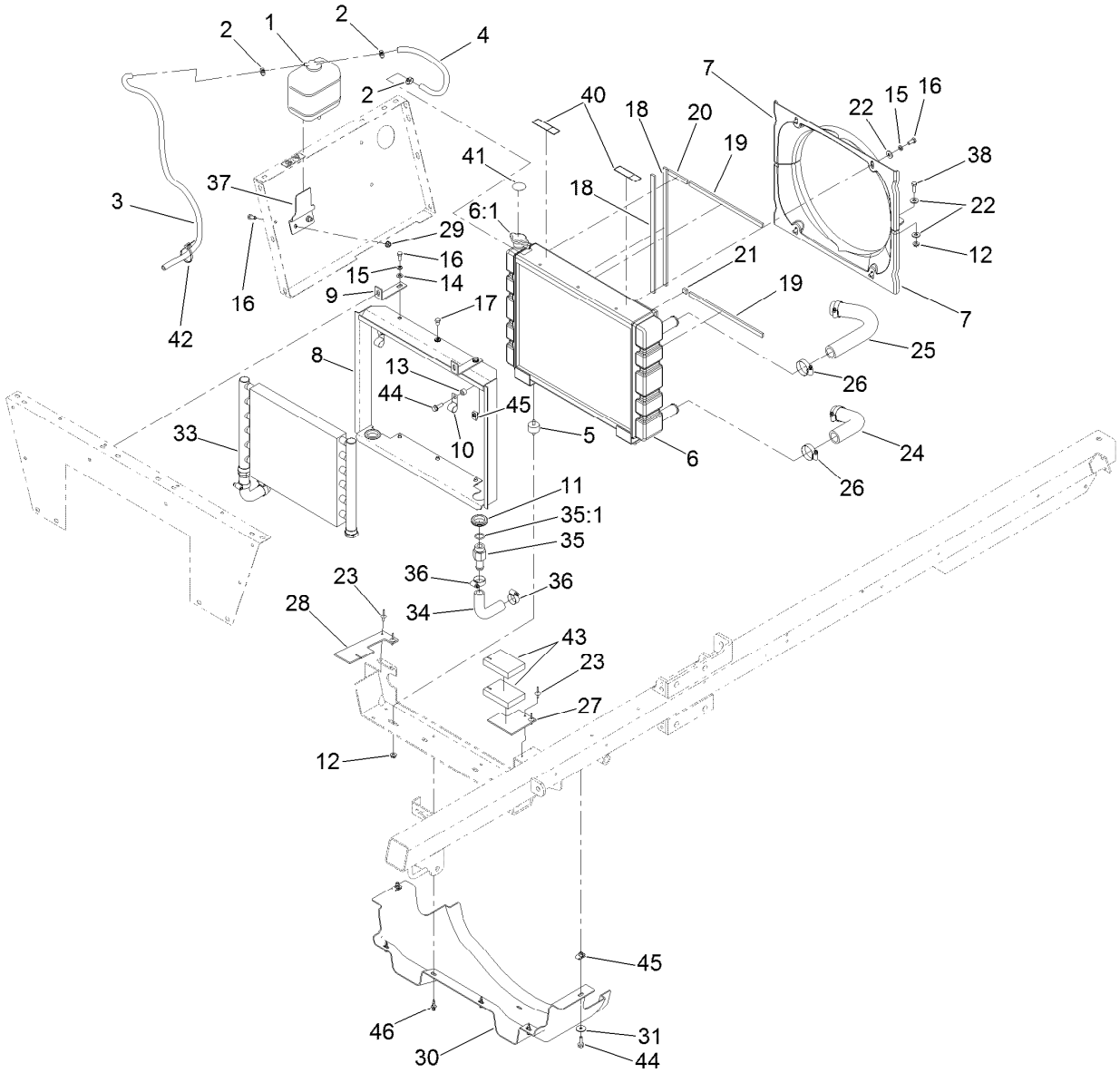


# Radiator Assembly

| Ref. | Part Number | Qty. | Description |
|---|---|---|---|
| 1 | 108-0638 | 1 | Bottle-Overflow |
| 2 | 2412-108 | 3 | Clamp-Worm |
| 3 | 109-0309 | 1 | Hose-Fuel |
| 4 | 106-1126 | 1 | Hose-Fuel |
| 5 | 62-5480 | 2 | Isolater-Seat |
| 6 | 106-5291 | 1 | Radiator |
| 6:1 | 114-9593 | 1 | Cap-Radiator |
| 7 | 131-5779 | 2 | Shroud-Fan |
| 8 | 106-5180-03 | 1 | Shroud-Radiator |
| 9 | 106-5185 | 2 | Brace-Radiator |
| 10 | 2412-150 | 2 | Clip-J |
| 11 | 240-3 | 2 | Grommet-Rubber |
| 12 | 32128-20 | 4 | Nut-HF |
| 13 | 98-4695 | 2 | Spacer |
| 14 | 3256-23 | 6 | Washer-Plain |
| 15 | 3253-4 | 10 | Washer-Lock |
| 16 | 322-3 | 4 | Screw-HH |
| 17 | 322-1 | 4 | Screw-HH |
| 18 | 107-8675 | 4 | Seal-Foam |
| 19 | 107-8676 | 2 | Seal-Foam |
| 20 | 107-8677 | 2 | Seal-Foam |

| Ref. | Part Number | Qty. | Description |
|---|---|---|---|
| 21 | 107-8678 | 2 | Seal-Foam |
| 22 | 3256-56 | 8 | Washer-Flat |
| 23 | 3269-18 | 4 | Rivet-Blind |
| 24 | 119-4992 | 1 | Hose-Radiator |
| 25 | 106-5239 | 1 | Hose-Radiator, Upper |
| 26 | 2412-111 | 4 | Clamp |
| 27 | 136-2315 | 1 | Baffle-Heat |
| 28 | 119-5037 | 1 | Baffle-Heat, RH |
| 29 | 104-8300 | 2 | Nut-HF, NI |
| 30 | 119-9393 | 1 | Shield-Front Heat, Engine |
| 31 | 3256-82 | 2 | Washer-Flat |
| 33 | 94-7007 | 1 | Cooler-Oil |
| 34 | 125-5880 | 2 | Hose-Cooler, Oil |
| 35 | 112-7835 | 2 | Ftg-STR,Spcl |
| 35:1 | 237-81 | 1 | O-Ring |
| 36 | 2412-129 | 4 | Clamp-Hose |
| 37 | 130-7102-03 | 1 | Bracket-Reservoir |
| 38 | 322-5 | 2 | Screw-HH |
| 40 | 120-0627 | 2 | Decal-Warning |
| 41 | 106-6755 | 1 | Decal-Cap, Radiator |
| 42 | 3290-378 | 1 | Tie-Cable |

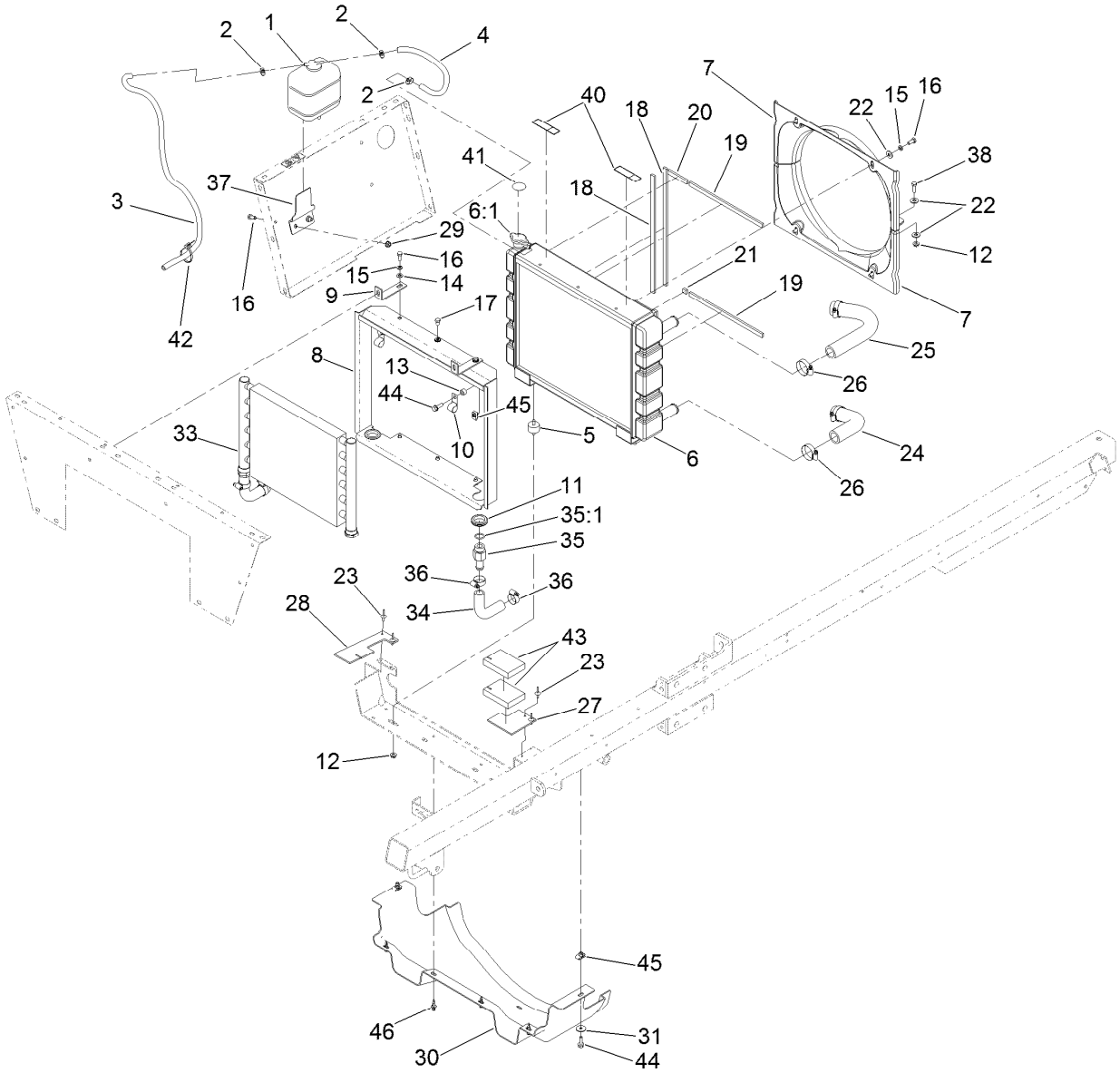


# Radiator Assembly (continued)

| Ref. | Part Number | Qty. | Description |
|---|---|---|---|
| 43 | 136-2316 | 2 | Baffle-Foam |
| 44 | 3234-29 | 4 | Screw-HHF |
| 45 | 94-2413 | 4 | Nut-U |
| 46 | 125-9622 | 4 | Rivet-Blind |

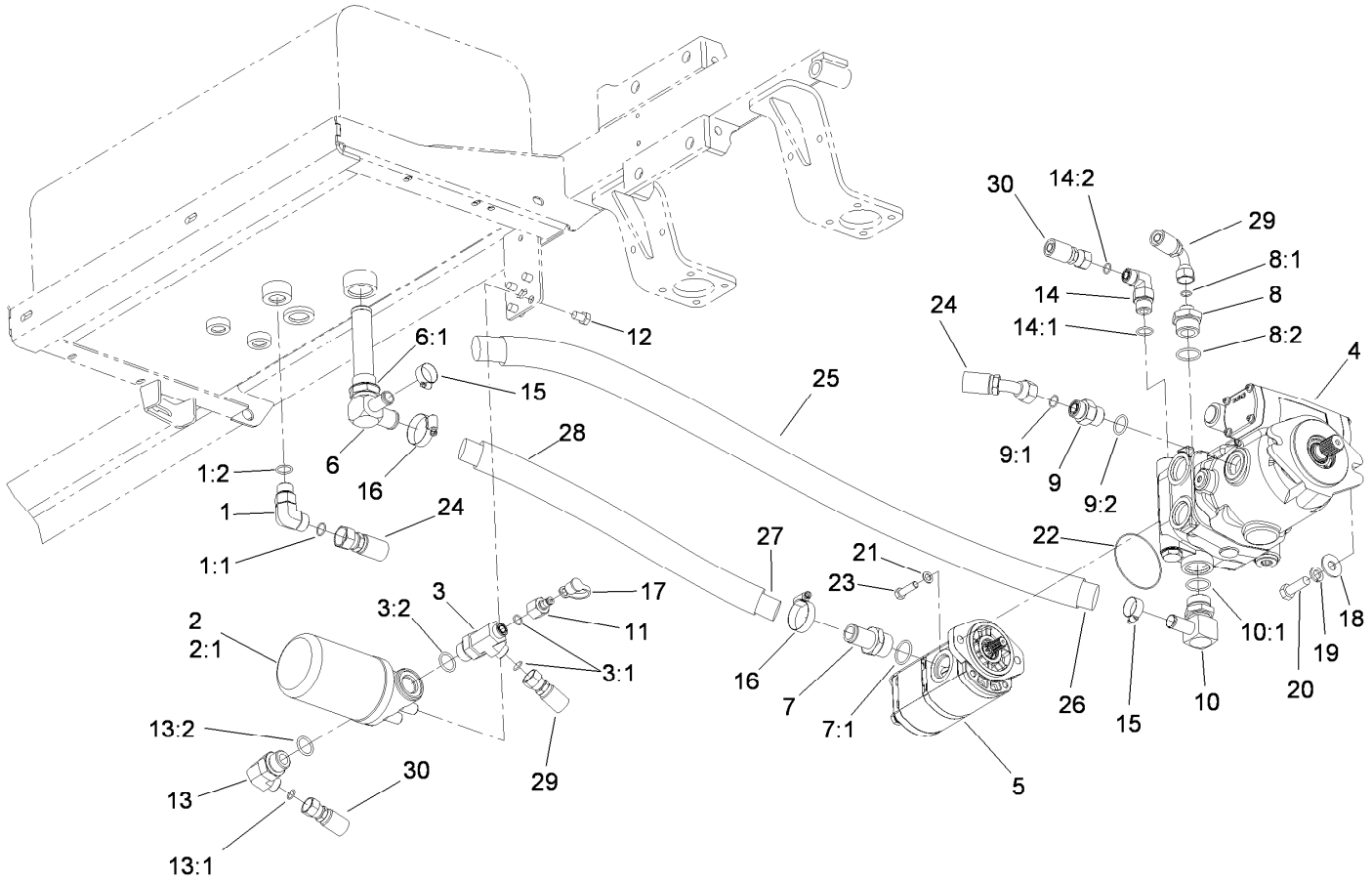


# Hydraulic Pump and Filter Assembly

| Ref. | Part Number | Qty. | Description |
|---|---|---|---|
| 1 | 340-17 | 1 | Fitting-Elbow, 90 DEG |
| 1:1 | 237-65 | 1 | O-Ring |
| 1:2 | 237-80 | 1 | O-Ring |
| 2 | 93-2242 | 1 | Filter-Oil |
| 2:1 | 75-1310 | 1 | Filter-HYD |
| 3 | 117-0676 | 1 | Fitting-Tee |
| 3:1 | 237-30 | 2 | O-Ring |
| 3:2 | 237-81 | 1 | O-Ring |
| 4 | 117-0685 | 1 | Piston Pump ASM |
| 5 | 119-5038 | 1 | Tandem Pump ASM |
| 6 | 117-0684 | 1 | Strainer-Tee |
| 6:1 | 237-146 | 1 | O-Ring |
| 7 | 354-78 | 1 | Fitting-STR |
| 7:1 | 237-146 | 1 | O-Ring |
| 8 | 104-9178 | 1 | Fitting-STR |
| 8:1 | 237-30 | 1 | O-Ring |
| 8:2 | 237-146 | 1 | O-Ring |
| 9 | 340-8 | 1 | Fitting-Straight |
| 9:1 | 237-65 | 1 | O-Ring |
| 9:2 | 237-81 | 1 | O-Ring |
| 10 | 98-0971 | 1 | Fitting-Elbow, 90 |

| Ref. | Part Number | Qty. | Description |
|---|---|---|---|
| 10:1 | 237-117 | 1 | O-Ring |
| 11 | 100-5616 | 1 | Fitting |
| 12 | 33115-016 | 4 | Screw-HH |
| 13 | 340-131 | 1 | Fitting-HYD, 90 DEG |
| 13:1 | 237-30 | 1 | O-Ring |
| 13:2 | 237-81 | 1 | O-Ring |
| 14 | 340-105 | 1 | Fitting-Elbow, 90 DEG |
| 14:1 | 237-80 | 1 | O-Ring |
| 14:2 | 237-30 | 1 | O-Ring |
| 15 | 2412-129 | 2 | Clamp-Hose |
| 16 | 2412-111 | 2 | Clamp |
| 17 | 354-79 | 1 | Cap-Dust |
| 18 | 3256-6 | 2 | Washer-Flat |
| 19 | 3253-7 | 2 | Washer-Lock |
| 20 | 325-6 | 2 | Screw-HH |
| 21 | 60-3540 | 2 | Washer |
| 22 | 60-3520 | 1 | O-Ring |
| 23 | 3274-1 | 2 | Screw-HSH |
| 24 | 112-2561 | 1 | Hose-HYD |
| 25 | 94-3688 | 1 | Sleeve-Protective |
| 26 | 119-5045 | 1 | Hose-Suction |

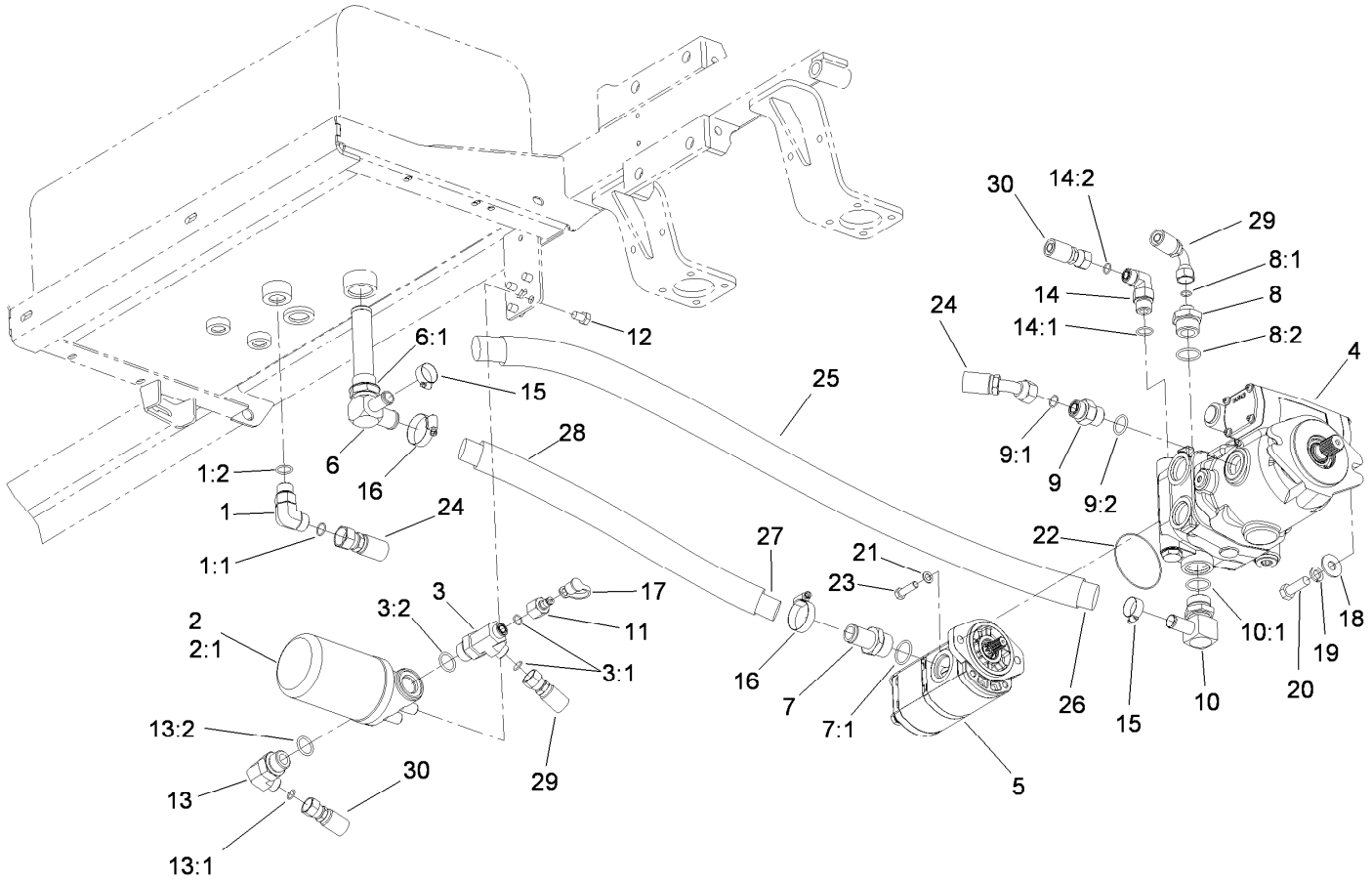


# Hydraulic Pump and Filter Assembly (continued)

| Ref. | Part Number | Qty. | Description |
|---|---|---|---|
| 27 | 117-0681 | 1 | Hose ASM |
| 28 | 107-3589 | 1 | Sleeve-Hose |
| 29 | 117-0686 | 1 | Hose-HYD |
| 30 | 117-0729 | 1 | Hose ASM |

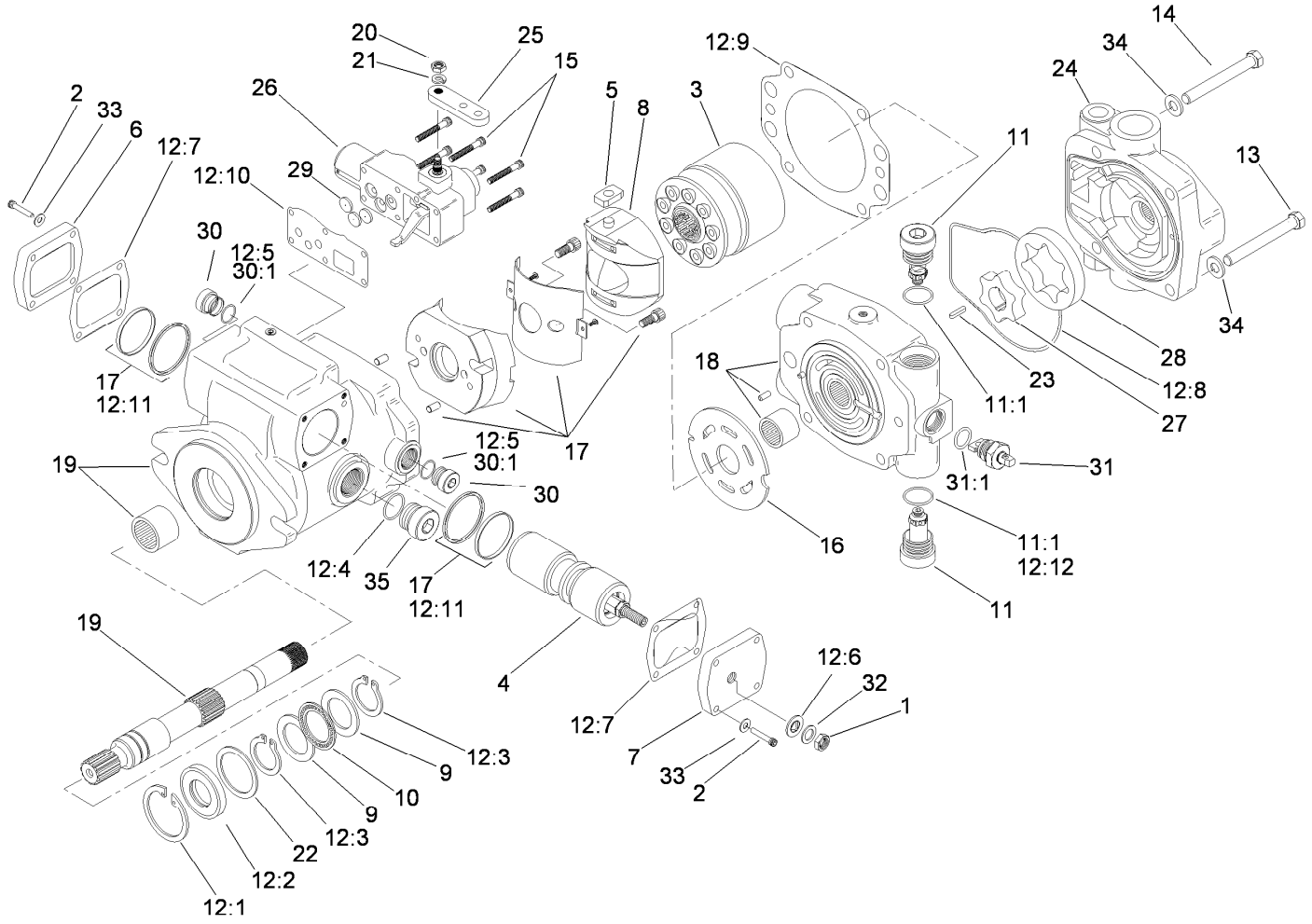


# Piston Pump Assembly No. 117-0685

| Ref. | Part Number | Qty. | Description |
|---|---|---|---|
| 1 | 3220-3 | 1 | Nut-HJ |
| 2 | 93-6337 | 8 | Screw |
| 3 | 99-8701 | 1 | Rotating Kit |
| 4 | 105-2856 | 1 | Piston-Servo |
| 5 | 94-3032 | 1 | Follower-Piston |
| 6 | 94-3033 | 1 | Plate-Cover |
| 7 | 105-9853 | 1 | Plate-Cover |
| 8 | 94-3026 | 1 | Camplate ASM |
| 9 | 76-6950 | 2 | Race-Thrust |
| 10 | 76-6960 | 1 | Bearing-Thrust |
| 11 | 105-2858 | 2 | Valve-Relief |
| 11:1 | | 1 | O-Ring ■ |
| 12 | 107-1561 | 1 | Seal Kit ● |
| 12:1 | 60-6260 | 1 | Ring |
| 12:2 | 105-3331 | 1 | Seal-Shaft |
| 12:3 | 76-7000 | 2 | Ring-Retaining |
| 12:4 | | 2 | O-Ring ■ |
| 12:5 | 93-6314 | 2 | O-Ring ● |

| Ref. | Part Number | Qty. | Description |
|---|---|---|---|
| 12:6 | 94-3027 | 1 | Washer-Seal |
| 12:7 | 93-6339 | 2 | Gasket |
| 12:8 | 105-2905 | 1 | O-Ring ● |
| 12:9 | 105-2900 | 1 | Gasket-Housing |
| 12:10 | 105-2901 | 1 | Gasket-Housing, Control |
| 12:11 | | 2 | Seal ASM ■ |
| 12:12 | 74-9380 | 1 | O-Ring ● |
| 13 | 323-15 | 2 | Screw-HH |
| 14 | 323-16 | 2 | Screw-HH |
| 15 | 93-6324 | 6 | Screw |
| 16 | 99-8704 | 1 | Plate-Valve |
| 17 | | 1 | Housing ■ |
| 18 | 105-2904 | 1 | Backplate |
| 19 | 93-6344 | 1 | Driveshaft |
| 20 | 3217-5 | 1 | Nut-Hex |
| 21 | 3253-3 | 1 | Washer-Lock |
| 22 | 60-6240 | 1 | Washer |
| 23 | 93-6375 | 1 | Key |

● Not illustrated

■ Not serviced separately

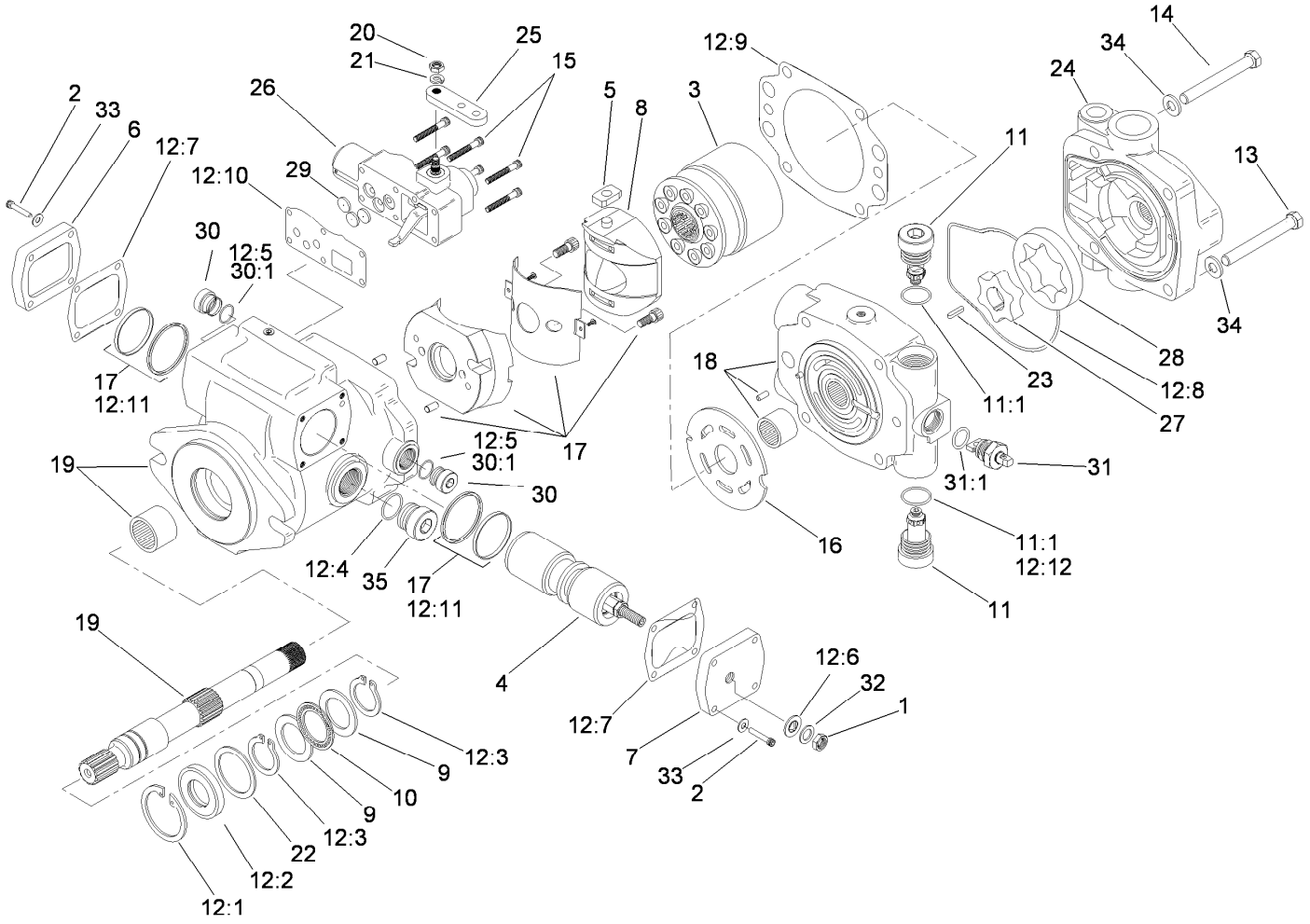


# Piston Pump Assembly No. 117-0685 (continued)

| Ref. | Part Number | Qty. | Description |
|---|---|---|---|
| 24 | 95-2110 | 1 | Adaptor |
| 25 | 105-2862 | 1 | Arm-Control |
| 26 | 115-4446 | 1 | Control-Servo, Manual |
| 27 | 93-6365 | 1 | Geroter-Inner |
| 28 | 93-6364 | 1 | Geroter-Outer |
| 29 | 94-3041 | 3 | Orifice-Control (.028 DIA) |
| 30 | 74-9280 | 2 | Plug ASM |

| Ref. | Part Number | Qty. | Description |
|---|---|---|---|
| 30:1 | | 1 | O-Ring ■ |
| 31 | 105-2913 | 1 | Valve-Bypass |
| 31:1 | | 1 | O-Ring ■ |
| 32 | 94-3030 | 1 | Washer |
| 33 | 93-6336 | 8 | Washer |
| 34 | 3256-24 | 4 | Washer-Flat |
| 35 | | 1 | Plug ASM ■ |

● Not illustrated

■ Not serviced separately

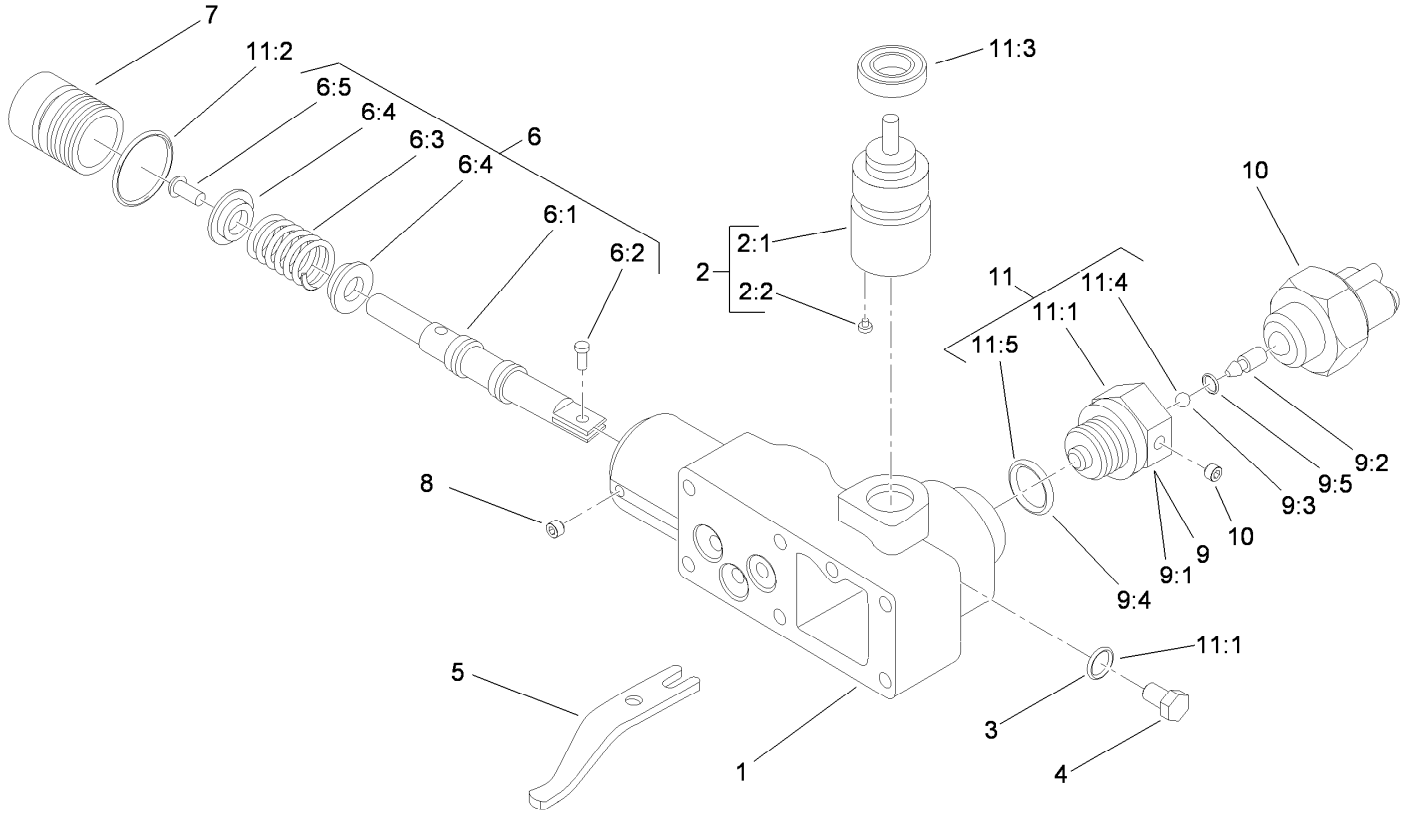


# Control Assembly No. 115-4446

| Ref. | Part Number | Qty. | Description |
|---|---|---|---|
| 1 | | 1 | Housing-Control ● |
| 2 | 108-7099 | 1 | Input Control Shaft ASM |
| 2:1 | | 1 | Shaft ● |
| 2:2 | | 1 | Pin ● |
| 3 | | 1 | O-Ring ● |
| 4 | | 1 | Plug ● |
| 5 | | 1 | Link-Feedback ● |
| 6 | 108-7098 | 1 | Valve Spool ASM |
| 6:1 | | 1 | Valve-Spool ● |
| 6:2 | | 1 | Pin-Dowel ● |
| 6:3 | | 1 | Spring ● |
| 6:4 | | 2 | Retainer ● |
| 6:5 | | 1 | Screw ● |
| 7 | | 1 | Plug ● |

| Ref. | Part Number | Qty. | Description |
|---|---|---|---|
| 8 | | 2 | Screw-Set ● |
| 9 | 108-8003 | 1 | Adaptor ASM |
| 9:1 | | 1 | Adaptor-Lockout, Neutral ● |
| 9:2 | | 1 | Pin ● |
| 9:3 | | 1 | Ball ● |
| 9:4 | | 1 | O-Ring ● |
| 9:5 | | 1 | O-Ring ● |
| 10 | 115-3795 | 1 | Switch-Neutral |
| 11 | 94-3044 | 1 | Seal Kit |
| 11:1 | 117-8979 | 1 | Seal-Shaft |
| 11:2 | 105-2901 | 1 | Gasket-Housing, Control |
| 11:3 | | 1 | O-Ring ● |
| 11:4 | | 1 | O-Ring ● |
| 11:5 | | 1 | Seal-Wiper ● |

● Not serviced separately

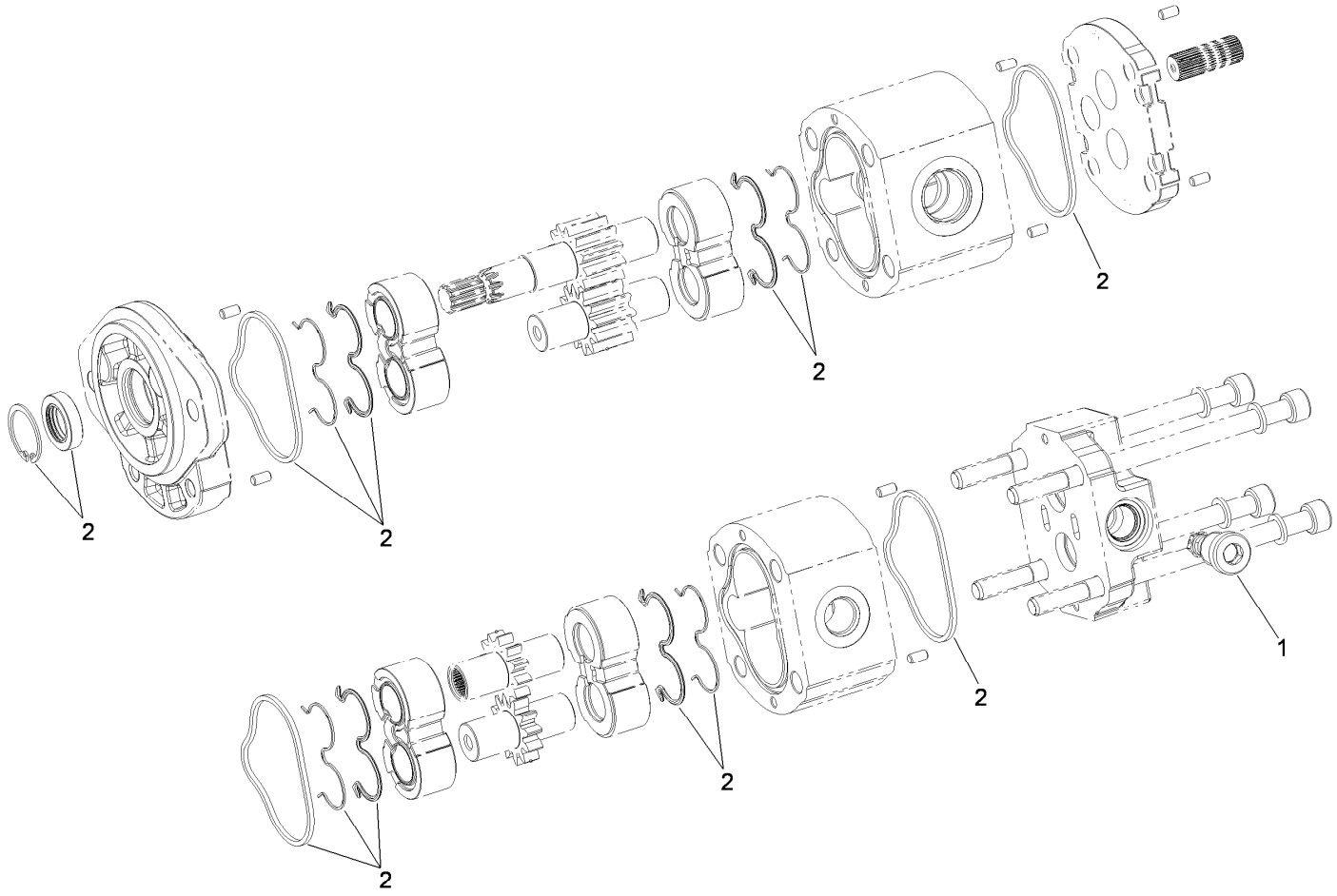


# Tandem Pump Assembly No. 119-5038

| *Ref.* | *Part Number* | *Qty.* | *Description* |
|---|---|---|---|
| 1 | 120-5156 | 1 | Valve-Relief |
| 2 | 120-5155 | 1 | Seal Kit |

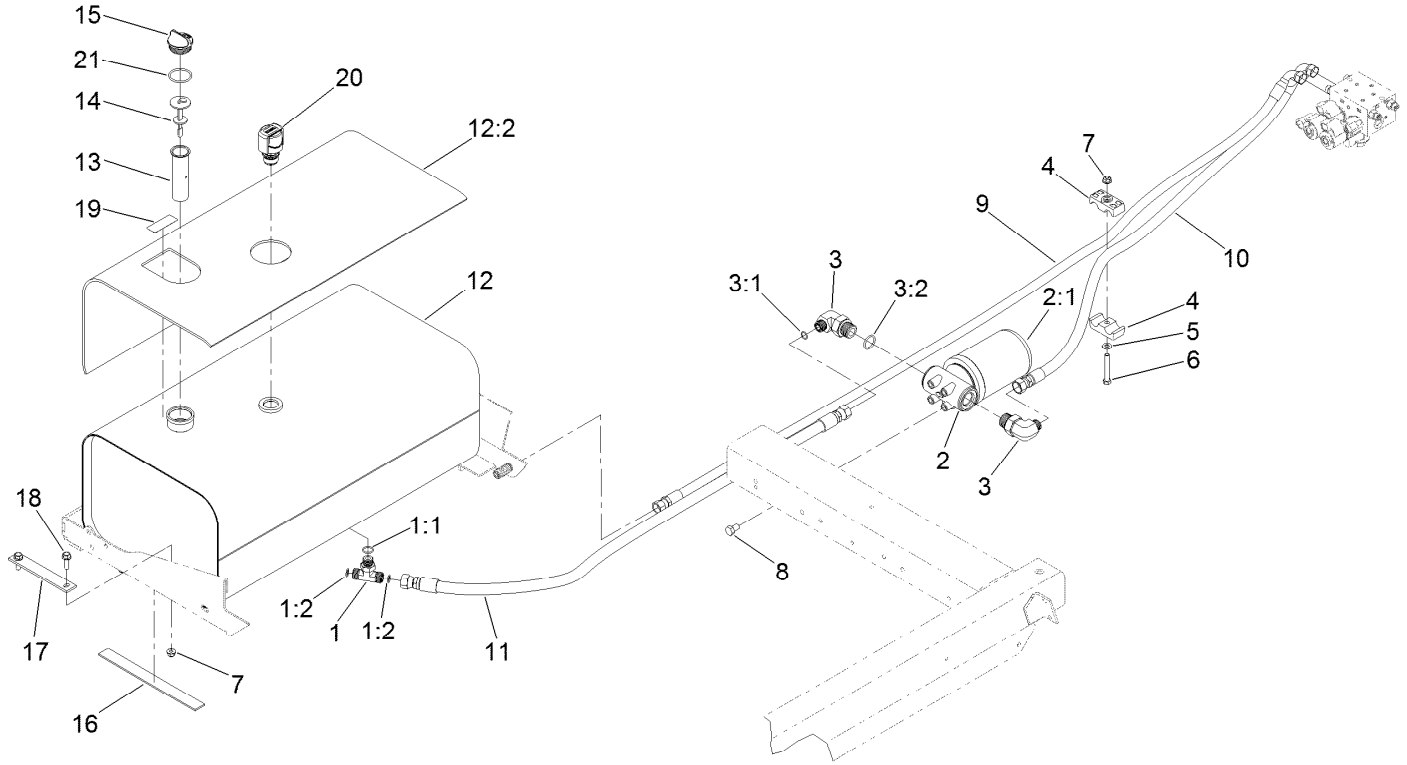


# Hydraulic Tank Assembly

| Ref. | Part Number | Qty. | Description |
|---|---|---|---|
| 1 | 340-157 | 1 | Fitting-HYD, Tee |
| 1:1 | 237-79 | 1 | O-Ring |
| 1:2 | 237-30 | 2 | O-Ring |
| 2 | 93-2242 | 1 | Filter-Oil |
| 2:1 | 75-1310 | 1 | Filter-HYD |
| 3 | 340-131 | 2 | Fitting-HYD, 90 DEG |
| 3:1 | 237-30 | 1 | O-Ring |
| 3:2 | 237-81 | 1 | O-Ring |
| 4 | 94-8105 | 2 | Clamp-Tube |
| 5 | 3256-23 | 1 | Washer-Plain |
| 6 | 322-11 | 1 | Screw-HH |
| 7 | 104-8300 | 5 | Nut-HF, NI |
| 8 | 33115-016 | 4 | Screw-HH |
| 9 | 119-0588 | 1 | HYD Hose ASM |
| 10 | 119-0587 | 1 | HYD Hose ASM |
| 11 | 106-3672 | 1 | HYD Hose ASM |
| 12 | 131-5799 | 1 | Hydraulic Tank ASM |
| 12:2 | 131-5787 | 1 | Cover-Tank, Hydraulic |
| 13 | 92-1705 | 1 | Filter-Screen |
| 14 | 105-2812 | 1 | Dipstick |
| 15 | 93-7498 | 1 | Plug-Plastic |
| 16 | 41995 | 2 | Strip-Armaflex |
| 17 | 94-7068-03 | 2 | Strap-Hold Down |
| 18 | 3234-17 | 4 | Screw-HHF |
| 19 | 93-6686 | 1 | Decal-Oil, HYD |
| 20 | 115-9793 | 1 | Breather |
| 21 | 237-101 | 1 | O-Ring |

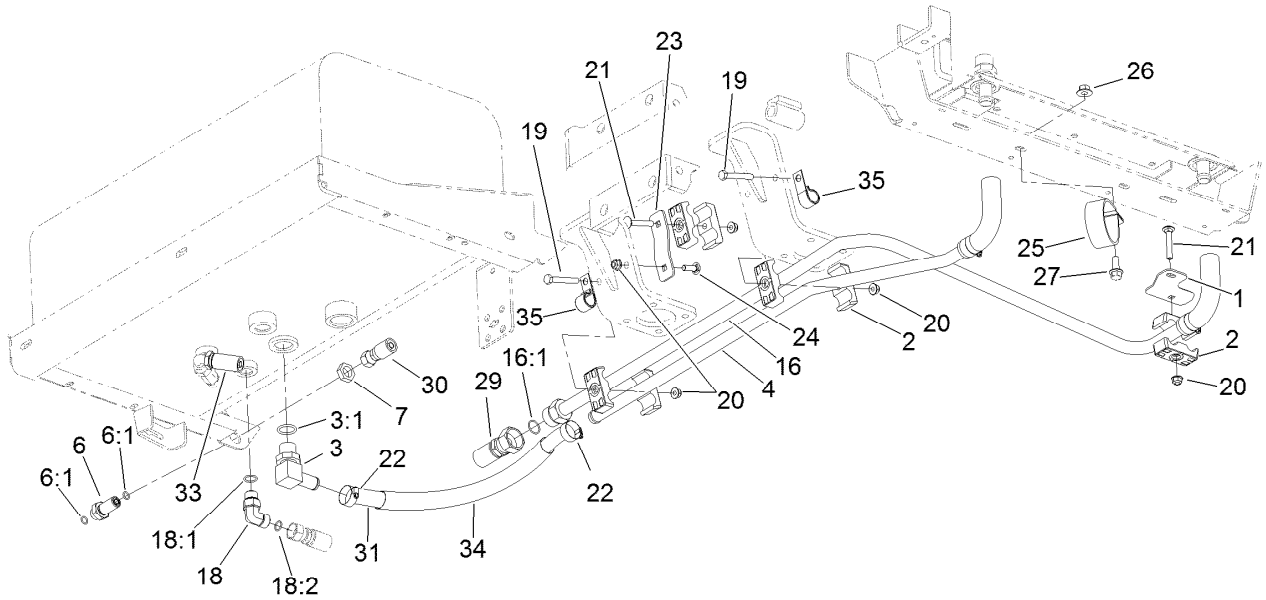


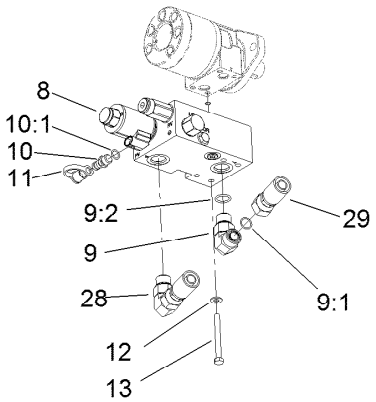


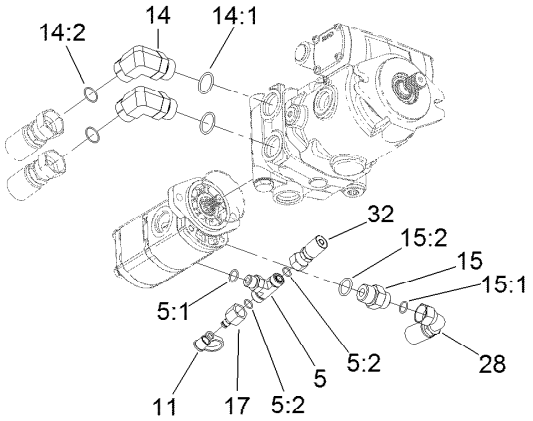


# Hydraulic Pump and Filter Assembly

| Ref. | Part Number | Qty. | Description |
|---|---|---|---|
| 1 | 117-0723 | 1 | Plate-Mount, Tube Clamp |
| 2 | 94-8105 | 10 | Clamp-Tube |
| 3 | 353-987 | 1 | Fitting-Elbow, 90 |
| 3:1 | 237-81 | 1 | O-Ring |
| 4 | 117-0693 | 1 | Hydraulic Tube |
| 5 | 340-157 | 1 | Fitting-HYD, Tee |
| 5:1 | 237-79 | 1 | O-Ring |
| 5:2 | 237-30 | 2 | O-Ring |
| 6 | 340-71 | 1 | Fitting-Straight, Bulkhead |
| 6:1 | 237-22 | 2 | O-Ring |
| 7 | 340-70 | 1 | Nut-Lock |
| 8 | 117-0708 | 1 | Pump Control Valve ASM |
| 9 | 340-17 | 2 | Fitting-Elbow, 90 DEG |
| 9:1 | 237-65 | 1 | O-Ring |
| 9:2 | 237-80 | 1 | O-Ring |
| 10 | 59-7410 | 1 | Fitting-Diagnostic |
| 10:1 | 237-42 | 1 | O-Ring |
| 11 | 354-79 | 2 | Cap-Dust |
| 12 | 3256-23 | 4 | Washer-Plain |
| 13 | 322-14 | 4 | Screw-HH |
| 14 | 340-129 | 2 | Fitting-Elbow, 90 DEG |

| Ref. | Part Number | Qty. | Description |
|---|---|---|---|
| 14:1 | 237-146 | 1 | O-Ring |
| 14:2 | 340-65 | 1 | O-Ring |
| 15 | 340-8 | 1 | Fitting-Straight |
| 15:1 | 237-65 | 1 | O-Ring |
| 15:2 | 237-81 | 1 | O-Ring |
| 16 | 125-5854 | 1 | Tube ASM |
| 16:1 | 237-58 | 1 | O-Ring |
| 17 | 100-5616 | 1 | Fitting |
| 18 | 340-98 | 1 | Fitting-Elbow, 90 DEG |
| 18:1 | 237-79 | 1 | O-Ring |
| 18:2 | 237-30 | 1 | O-Ring |
| 19 | 322-11 | 2 | Screw-HH |
| 20 | 104-8300 | 7 | Nut-HF, NI |
| 21 | 3230-6 | 3 | Bolt-CARR,Full Thrd |
| 22 | 2412-129 | 2 | Clamp-Hose |
| 23 | 117-0689 | 2 | Plate-Mount, Tube Clamps |
| 24 | 3230-22 | 2 | Screw-CARR |
| 25 | 2412-102 | 1 | Clamp-R |
| 26 | 32128-43 | 1 | Nut-Flange |
| 27 | 3234-11 | 1 | Screw-HHF |
| 28 | 117-0680 | 1 | Hose ASM |

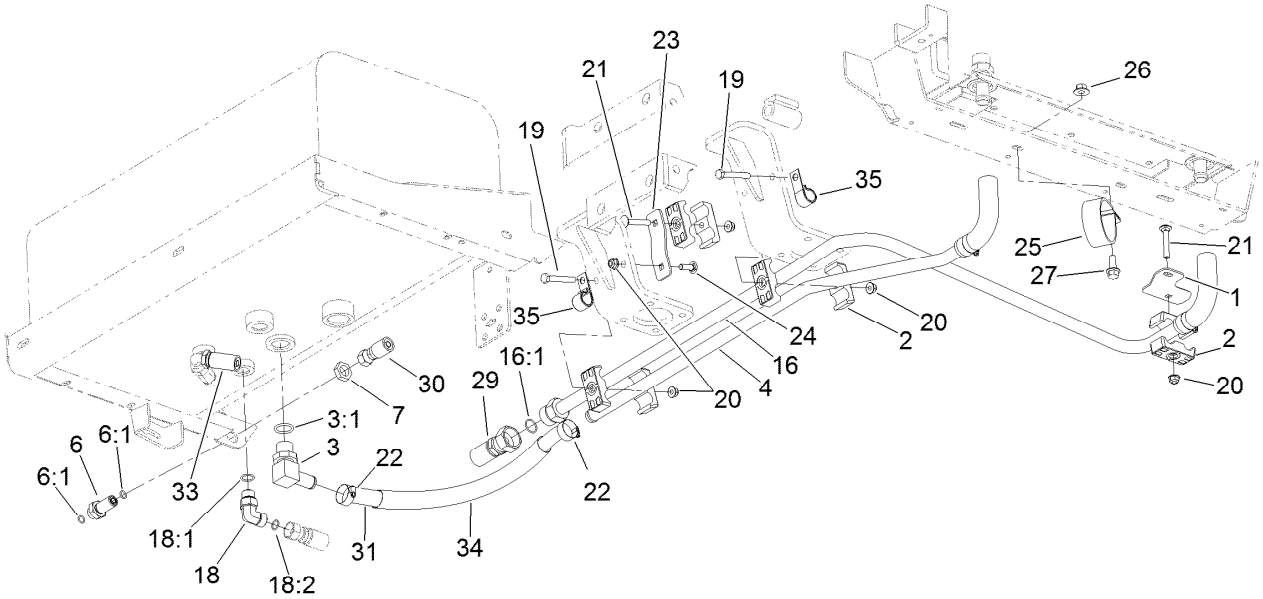


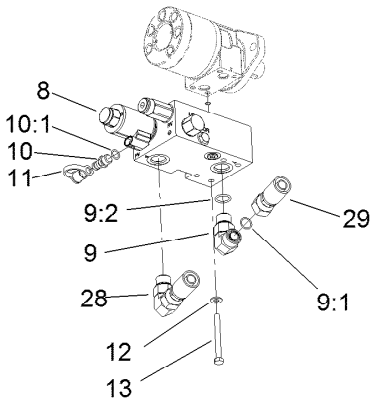


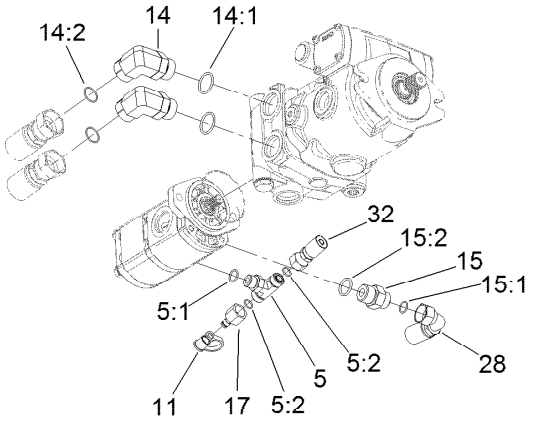


# Hydraulic Pump and Filter Assembly (continued)

| Ref. | Part Number | Qty. | Description |
|---|---|---|---|
| 29 | 117-0682 | 1 | Hose ASM |
| 30 | 119-0583 | 1 | Hose ASM |
| 31 | 119-5045 | 1 | Hose-Suction |
| 32 | 117-0687 | 1 | Hose ASM |
| 33 | 125-5853 | 1 | HYD-Hose |
| 34 | 94-3688 | 1 | Sleeve-Protective |
| 35 | 94-9580 | 2 | Clamp-J |

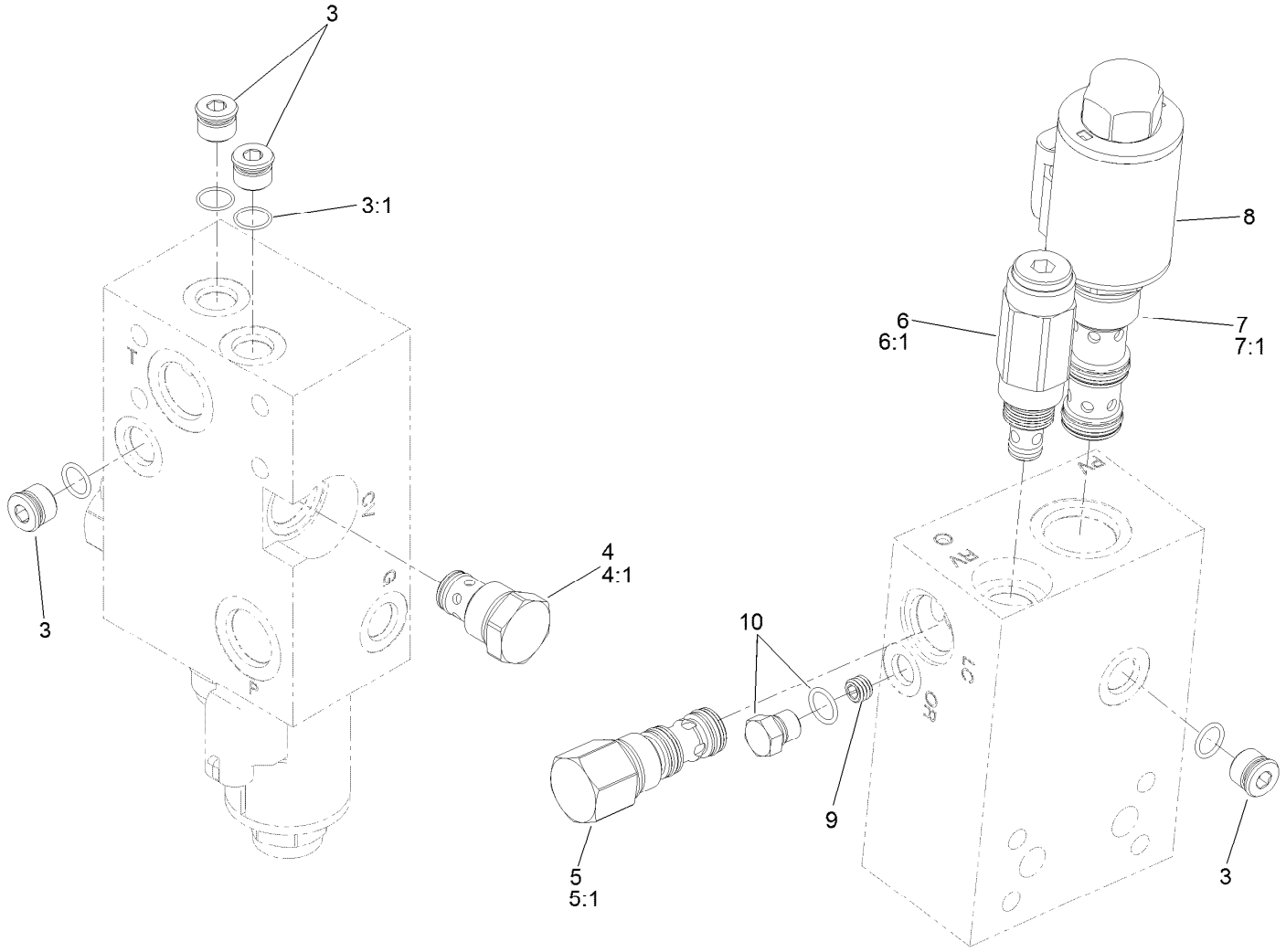


# Pump Control Valve Assembly No. 117-0708

| *Ref.* | *Part Number* | *Qty.* | *Description* |
|---|---|---|---|
| 3 | 353-512 | 4 | Plug |
| 3:1 | 237-78 | 1 | O-Ring |
| 4 | 110-8881 | 1 | Valve-Check |
| 4:1 | 105-9159 | 1 | Seal Kit ● |
| 5 | 120-1660 | 1 | Compensator-Pressure |
| 5:1 | 107-7813 | 1 | Seal Kit ● |
| 6 | 117-8312 | 1 | Valve-Relief |
| 6:1 | 105-9156 | 1 | Seal Kit |
| 7 | 120-2590 | 1 | Valve-Flow Control |
| 7:1 | 114-5515 | 1 | Seal Kit |
| 8 | 120-2589 | 1 | Coil-12Vdc |
| 9 | 107-1987 | 1 | Orifice-0.040 |
| 10 | 117-0115 | 1 | Plug |

● Not illustrated

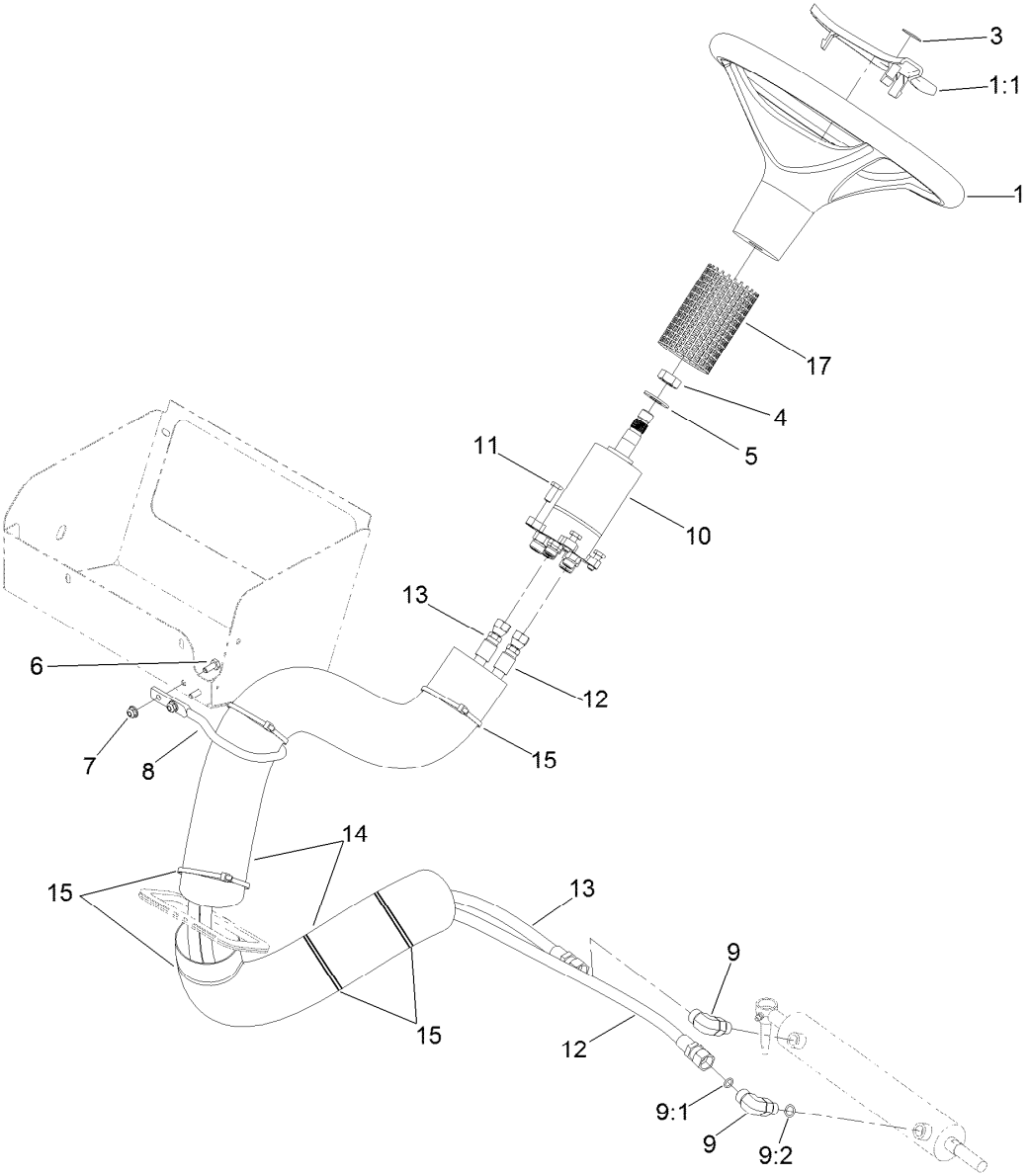


# Steering Hydraulic Assembly

| Ref. | Part Number | Qty. | Description |
|---|---|---|---|
| 1 | 98-1471 | 1 | Wheel-Steering |
| 1:1 | 98-1468 | 1 | Cover-Wheel, Steering |
| 3 | 98-1459 | 1 | Decal |
| 4 | 3296-33 | 1 | Nut-Lock, NI |
| 5 | 3256-27 | 1 | Washer-Flat |
| 6 | 321-3 | 2 | Screw-HH |
| 7 | 104-7201 | 2 | Nut-HF |
| 8 | 119-4853 | 1 | Guide-Hose |
| 9 | 340-77 | 2 | Fitting-Elbow, 90 DEG |

| Ref. | Part Number | Qty. | Description |
|---|---|---|---|
| 9:1 | 237-22 | 1 | O-Ring |
| 9:2 | 237-42 | 1 | O-Ring |
| 10 | 117-0707 | 1 | Steering Valve ASM |
| 11 | 33114-020 | 4 | Screw-HH |
| 12 | 117-0717 | 1 | Hose ASM |
| 13 | 117-0688 | 1 | Hose ASM |
| 14 | 106-6713 | 2 | Cover-Lines, Steering |
| 15 | 3290-379 | 7 | Tie-Cable |
| 17 | 130-8296 | 1 | Sleeve-Steering Cover |

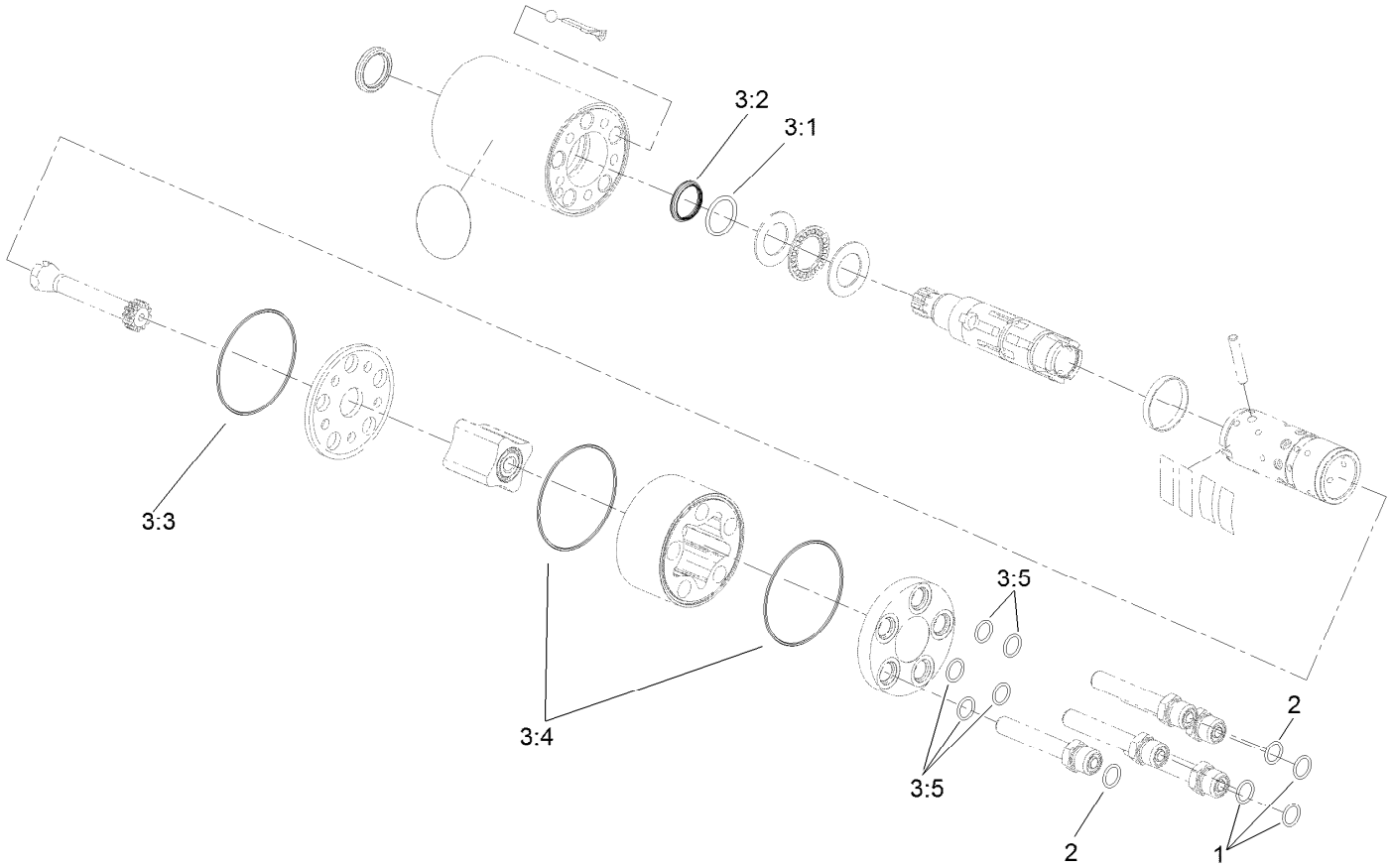


# Steer Valve Assembly No. 117-0707

| *Ref.* | *Part Number* | *Qty.* | *Description* |
|---|---|---|---|
| 1 | 237-21 | 3 | O-Ring |
| 2 | 237-22 | 2 | O-Ring |
| 3 | 106-6716 | 1 | Seal Kit ● |
| 3:1 | | 1 | Ring-Seal, Dust ■ |
| 3:2 | | 1 | Seal-Shaft ■ |
| 3:3 | | 1 | O-Ring ■ |
| 3:4 | | 2 | O-Ring ■ |
| 3:5 | | 5 | O-Ring ■ |

● Not illustrated

■ Not serviced separately

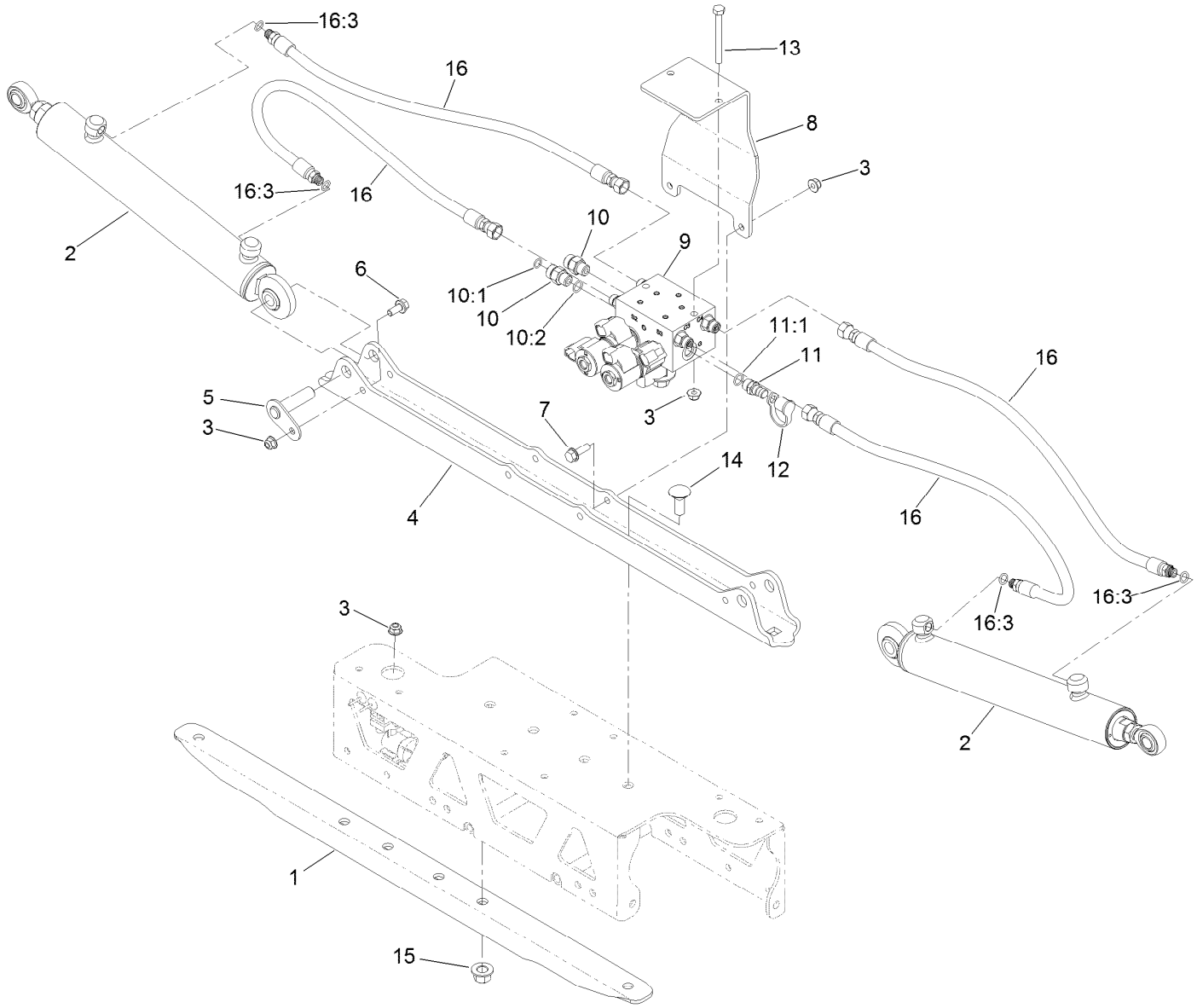


# Boom Lift Assembly

| Ref. | Part Number | Qty. | Description |
|---|---|---|---|
| 1 | 131-0285-03 | 1 | Stiffener-Channel |
| 2 | 117-0701 | 2 | Hydraulic Cylinder ASM |
| 3 | 104-8300 | 7 | Nut-HF, NI |
| 4 | 131-0275-03 | 1 | Plate-Mount |
| 5 | 112-7884 | 2 | Pin-Pivot |
| 6 | 110-5053 | 2 | Screw-HHF |
| 7 | 3234-29 | 2 | Screw-HHF |
| 8 | 130-8201-03 | 1 | Mount-Valve |
| 9 | 136-2400 | 1 | On-Off Boom Lift Valve ASM |
| 10 | 340-2 | 2 | Fitting-Straight |

| Ref. | Part Number | Qty. | Description |
|---|---|---|---|
| 10:1 | 237-22 | 1 | O-Ring |
| 10:2 | 237-42 | 1 | O-Ring |
| 11 | 59-7410 | 1 | Fitting-Diagnostic |
| 11:1 | 237-42 | 1 | O-Ring |
| 12 | 354-79 | 1 | Cap-Dust |
| 13 | 322-14 | 2 | Screw-HH |
| 14 | 110-5067 | 4 | Screw-CARR |
| 15 | 99-5107 | 4 | Nut-Lock |
| 16 | 131-0276 | 4 | Hose ASM |
| 16:3 | 237-78 | 1 | O-Ring |

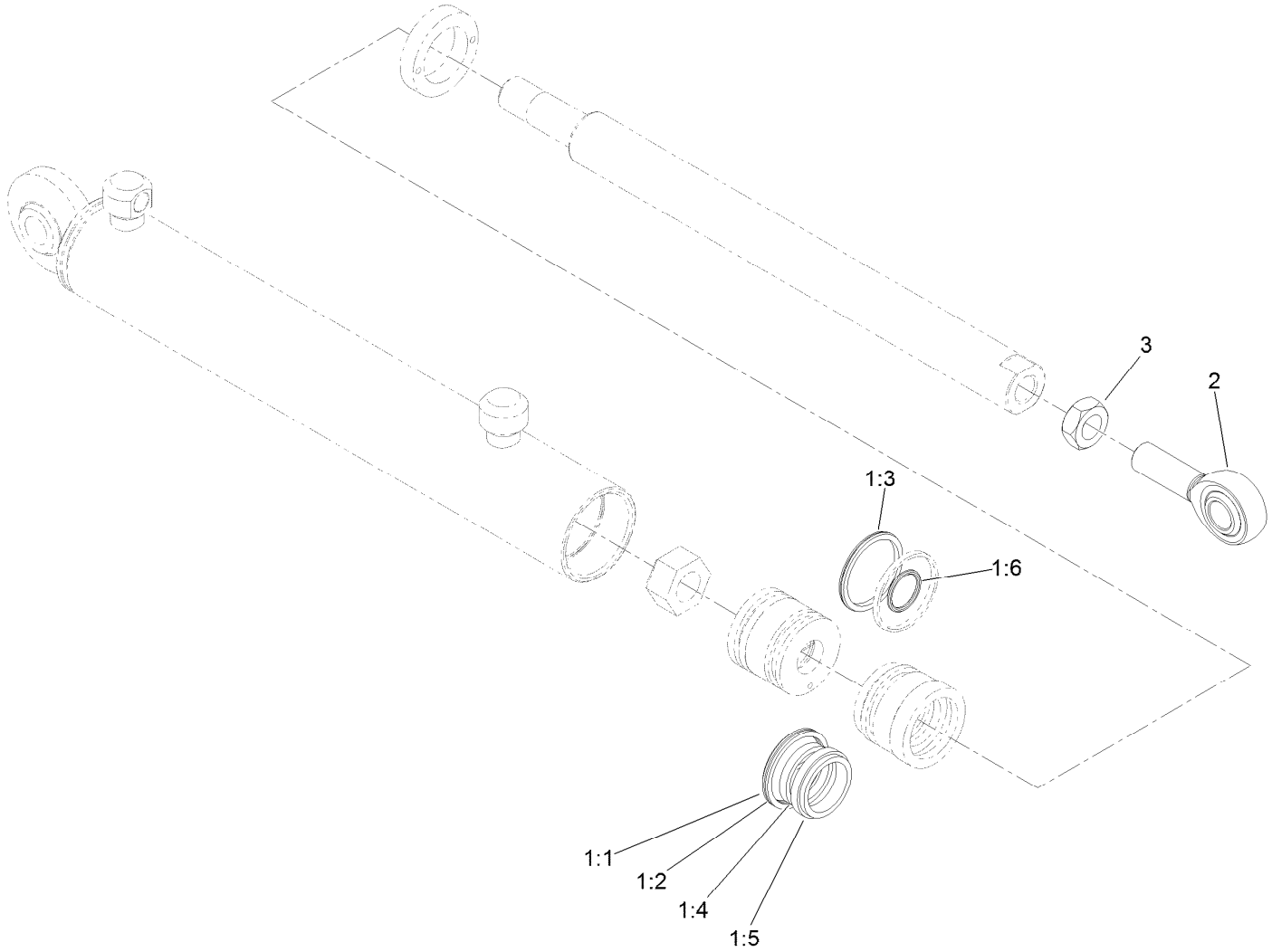


# Hydraulic Cylinder Assembly No. 117-0701

| *Ref.* | *Part Number* | *Qty.* | *Description* |
|---|---|---|---|
| 1 | 119-8026 | 1 | Seal Kit ● |
| 1:1 | | 1 | O-Ring ■ |
| 1:2 | | 1 | Ring-Backup ■ |
| 1:3 | | 1 | Bp Seal ■ |
| 1:4 | | 1 | Bs Seal ■ |
| 1:5 | | 1 | Dust Seal ■ |
| 1:6 | | 1 | O-Ring ■ |
| 2 | 119-8027 | 1 | Rod End |
| 3 | 3220-6 | 1 | Nut-Jam |

● Not illustrated

■ Not serviced separately

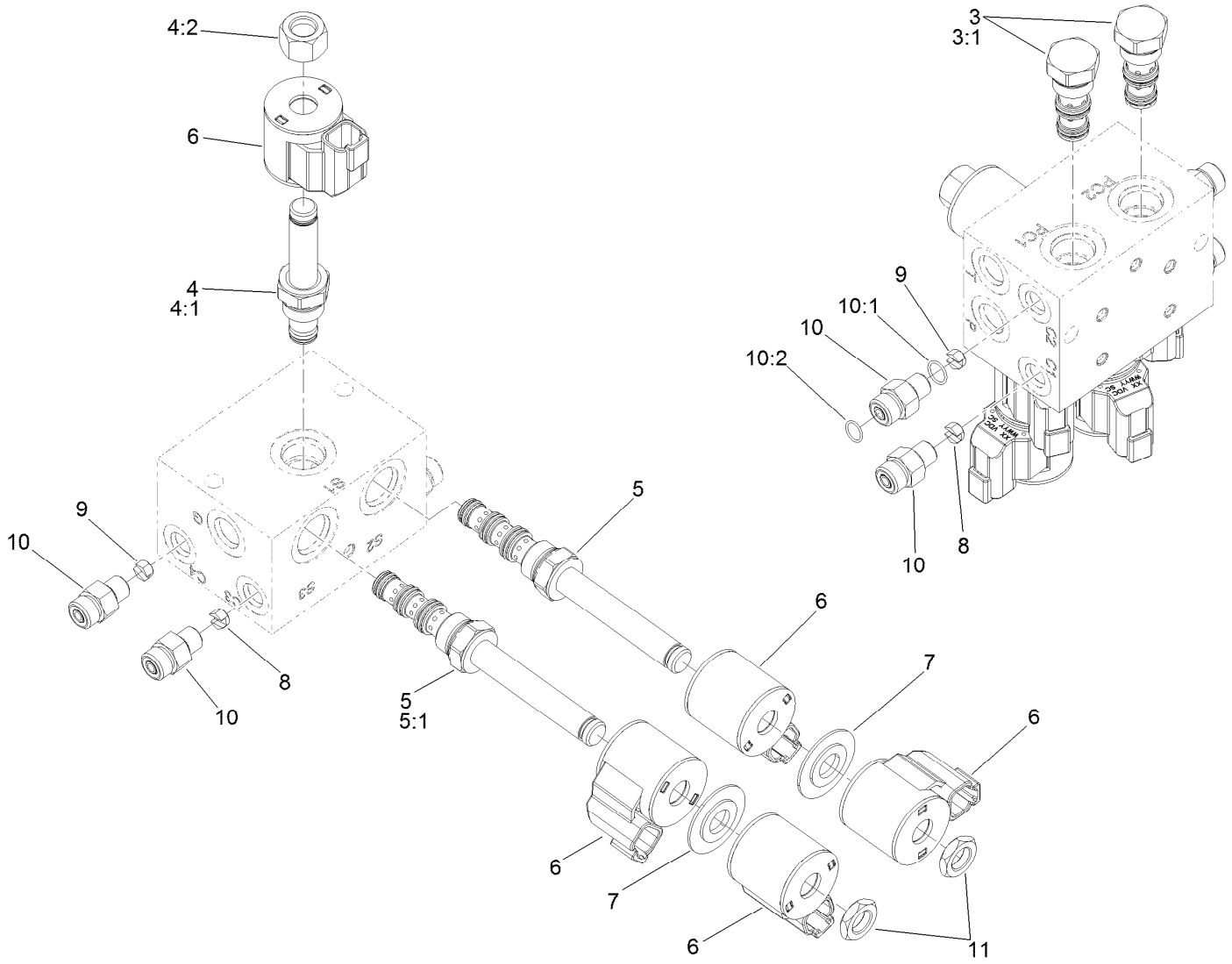


# On-Off Boom Lift Valve Assembly No. 136-2400

| Ref. | Part Number | Qty. | Description |
|---|---|---|---|
| 3 | 136-2430 | 2 | Valve-Check, Po |
| 3:1 | 120-0886 | 1 | Seal Kit |
| 4 | 107-7517 | 1 | Valve-Solenoid |
| 4:1 | 105-9156 | 1 | Seal Kit |
| 4:2 | 107-7812 | 1 | Nut-Solenoid |
| 5 | 120-2587 | 2 | Valve-Solenoid |
| 5:1 | 112-6520 | 1 | Seal Kit ● |
| 6 | 119-8036 | 5 | Coil |
| 7 | 120-2586 | 2 | Spacer-Coil |
| 8 | 110-8903 | 2 | Orifice-Control, Flow (0.055) |
| 9 | 125-8849 | 2 | Orifice-Flow Control |
| 10 | 340-92 | 4 | Fitting-Straight |
| 10:1 | 237-78 | 1 | O-Ring |
| 10:2 | 237-21 | 1 | O-Ring |
| 11 | 110-2634 | 2 | Nut-Coil |

● Not illustrated

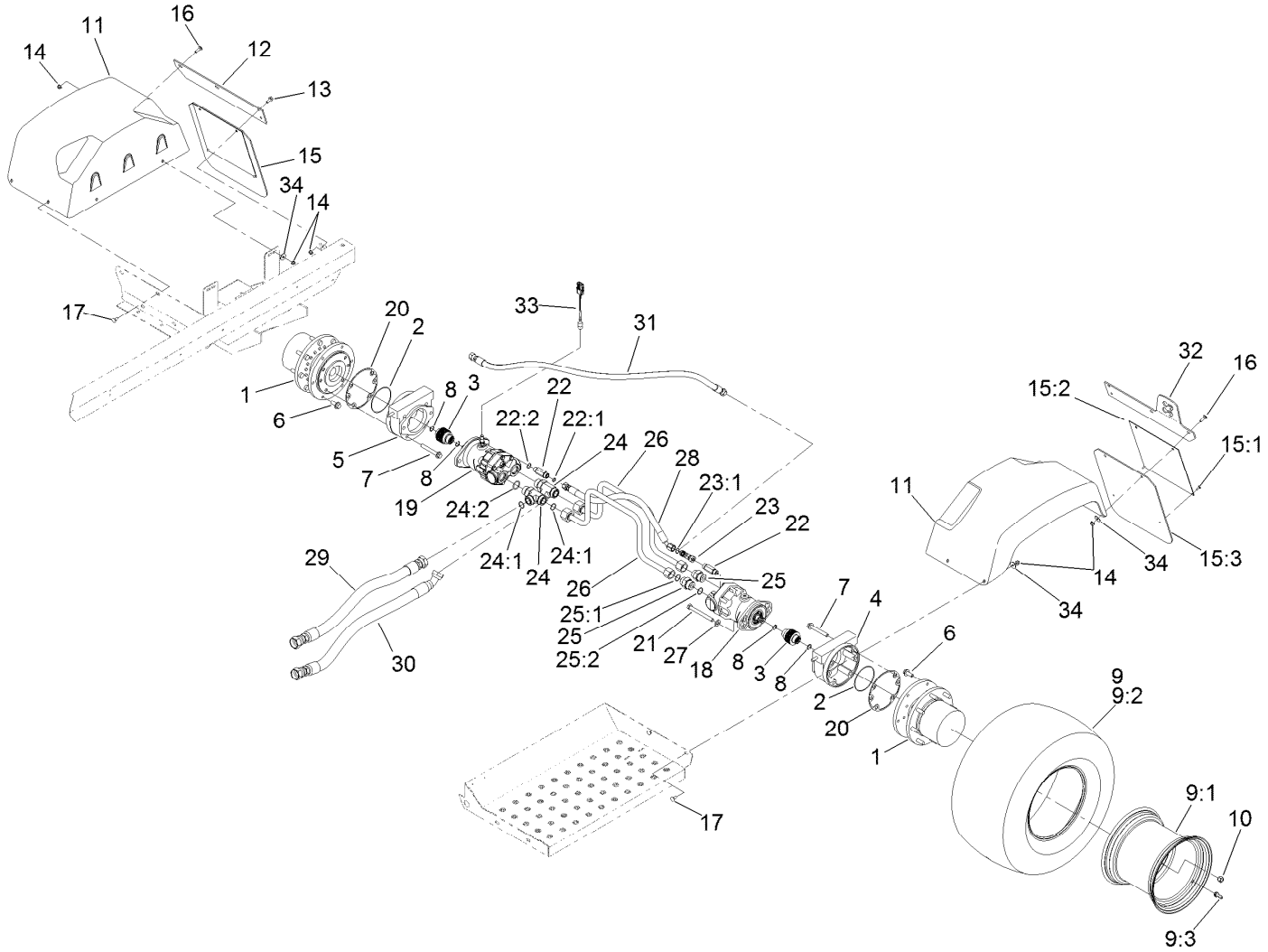


# Rear Drive Assembly

| Ref. | Part Number | Qty. | Description |
|---|---|---|---|
| 1 | 136-2913 | 2 | Planetary ASM |
| 2 | 237-166 | 2 | O-Ring |
| 3 | 100-3046 | 2 | Shaft-Brake, Splined |
| 4 | 100-3069 | 1 | RH Brake ASM |
| 5 | 100-3070 | 1 | LH Brake ASM |
| 6 | 33106-030 | 12 | Screw-HHF |
| 7 | 33106-080 | 8 | Screw-HHF |
| 8 | 93-7972 | 4 | Ring-Retaining, Internal |
| 9 | 133-2744 | 2 | Tire And Wheel ASM |
| 9:1 | 133-2723 | 1 | Wheel |
| 9:2 | 133-2724 | 1 | Tire |
| 9:3 | 232-27 | 1 | Stem-Valve |
| 10 | 242-50 | 16 | Nut-Lug |
| 11 | 93-6498 | 2 | Fender-Rear |
| 12 | 93-6528-03 | 1 | Strap-Mount, Fender |
| 13 | 3234-5 | 4 | Screw-HHF |
| 14 | 104-8300 | 16 | Nut-HF, NI |
| 15 | 94-7127 | 2 | Splash Guard ASM |
| 15:1 | 114439 | 2 | Rivet-Blind |
| 15:2 | 94-7128-03 | 1 | Plate-Guard, Splash |
| 15:3 | 94-7129 | 1 | Guard-Splash |

| Ref. | Part Number | Qty. | Description |
|---|---|---|---|
| 16 | 3230-2 | 4 | Bolt-CARR |
| 17 | 3230-1 | 8 | Bolt-CARR |
| 18 | 132-5631 | 1 | HYD Motor ASM |
| 19 | 136-2373 | 1 | Motor-Hydraulic (W/Speed Sensor) |
| 20 | 93-7984 | 2 | Gasket |
| 21 | 33116-110 | 4 | Screw-HH |
| 22 | 119-4854 | 2 | Fitting-STR |
| 22:1 | 237-30 | 1 | O-Ring |
| 22:2 | 237-79 | 1 | O-Ring |
| 23 | 340-104 | 1 | Fitting-HYD, Tee |
| 23:1 | 237-30 | 2 | O-Ring |
| 24 | 104-3795 | 2 | Fitting-Tee |
| 24:1 | 340-65 | 2 | O-Ring |
| 24:2 | 237-146 | 1 | O-Ring |
| 25 | 340-91 | 2 | Fitting-STR |
| 25:1 | 237-58 | 1 | O-Ring |
| 25:2 | 237-146 | 1 | O-Ring |
| 26 | 117-0674 | 2 | Tube-Traction |
| 27 | 33096-00 | 4 | Washer-Flat |
| 28 | 131-9634 | 1 | Hydraulic Hose ASM |

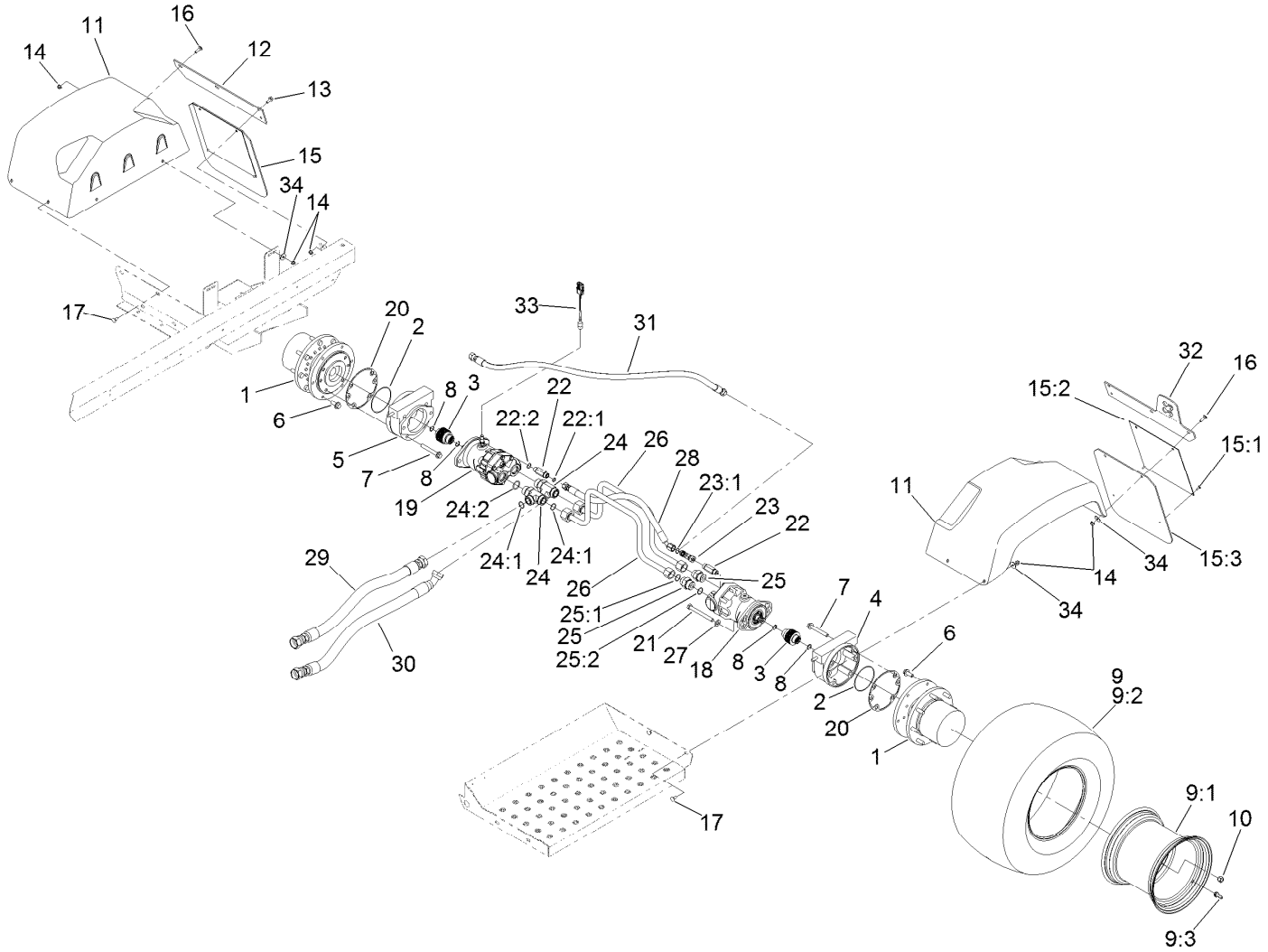


# Rear Drive Assembly (continued)

| Ref. | Part Number | Qty. | Description |
|---|---|---|---|
| 29 | 120-8563 | 1 | Hose ASM |
| 30 | 120-8564 | 1 | Hose ASM |
| 31 | 119-0582 | 1 | Hose ASM |

| Ref. | Part Number | Qty. | Description |
|---|---|---|---|
| 32 | 136-2308-03 | 1 | Support-Mount, Drain |
| 33 | 136-2339 | 1 | Harness-Wire, Adaptor |
| 34 | 3256-82 | 12 | Washer-Flat |

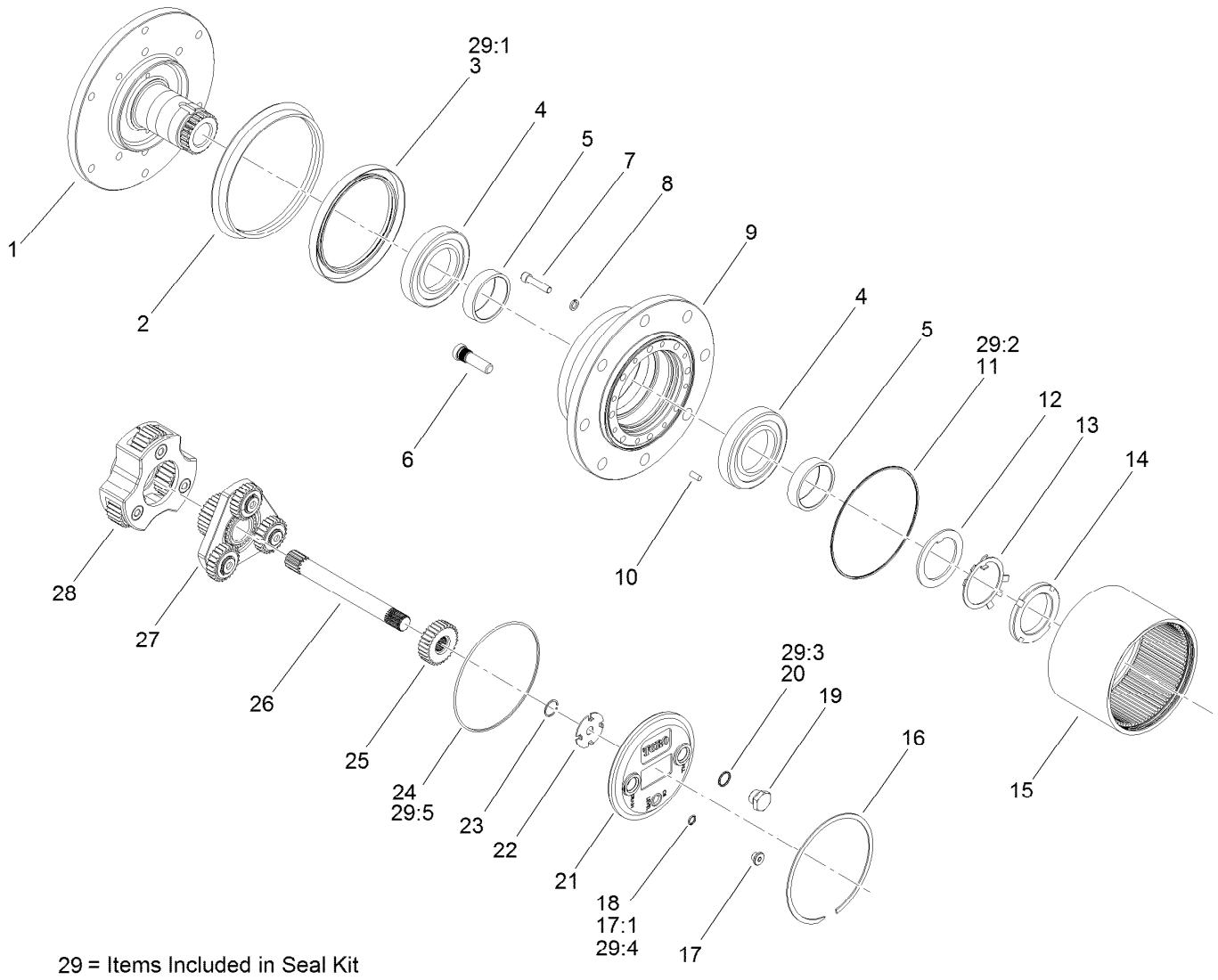


29 = Items Included in Seal Kit

# Planetary Assembly No. 136-2913

| Ref. | Part Number | Qty. | Description |
|---|---|---|---|
| 1 | | 1 | Spindle ● |
| 2 | 138-1204 | 1 | Seal-Boot |
| 3 | | 1 | Seal-Lip ● |
| 4 | 138-1205 | 2 | Bearing-Cup |
| 5 | 138-1206 | 2 | Bearing-Cone |
| 6 | 105-8124 | 8 | Stud-Wheel |
| 7 | 138-1207 | 8 | Screw-Socket Head |
| 8 | 138-1208 | 8 | Washer-Lock |
| 9 | | 1 | Housing ● |
| 10 | 105-8121 | 4 | Pin-Dowel |
| 11 | | 1 | O-Ring ● |
| 12 | 138-6928 | 1 | Spacer |
| 13 | 138-6929 | 1 | Washer |
| 14 | 138-6930 | 1 | Nut-Lock |
| 15 | 138-1209 | 1 | Gear-Ring |
| 16 | 138-1210 | 1 | Ring-Snap |
| 17 | 353-990 | 1 | Plug ASM |
| 17:1 | 237-78 | 1 | O-Ring |

| Ref. | Part Number | Qty. | Description |
|---|---|---|---|
| 18 | 237-78 | 1 | O-Ring |
| 19 | 138-1211 | 2 | Plug-Flange, Magnetic |
| 20 | 138-1212 | 2 | O-Ring |
| 21 | 138-1213 | 1 | Cap-End |
| 22 | 138-1214 | 1 | Washer-Thrust, Sun |
| 23 | 105-8131 | 2 | Ring-Retaining |
| 24 | | 1 | O-Ring ● |
| 25 | 138-1215 | 1 | Gear-Primary, Sun |
| 26 | 138-1216 | 1 | Shaft-Drive |
| 27 | 138-1217 | 1 | Primary Carrier ASM |
| 28 | 138-1218 | 1 | Secondary Carrier ASM |
| 29 | 138-1219 | 1 | Kit-Seal |
| 29:1 | | 1 | Seal-Lip ● |
| 29:2 | | 1 | O-Ring ● |
| 29:3 | | 1 | O-Ring ● |
| 29:4 | | 1 | O-Ring ● |
| 29:5 | | 1 | O-Ring ● |

● Not serviced separately

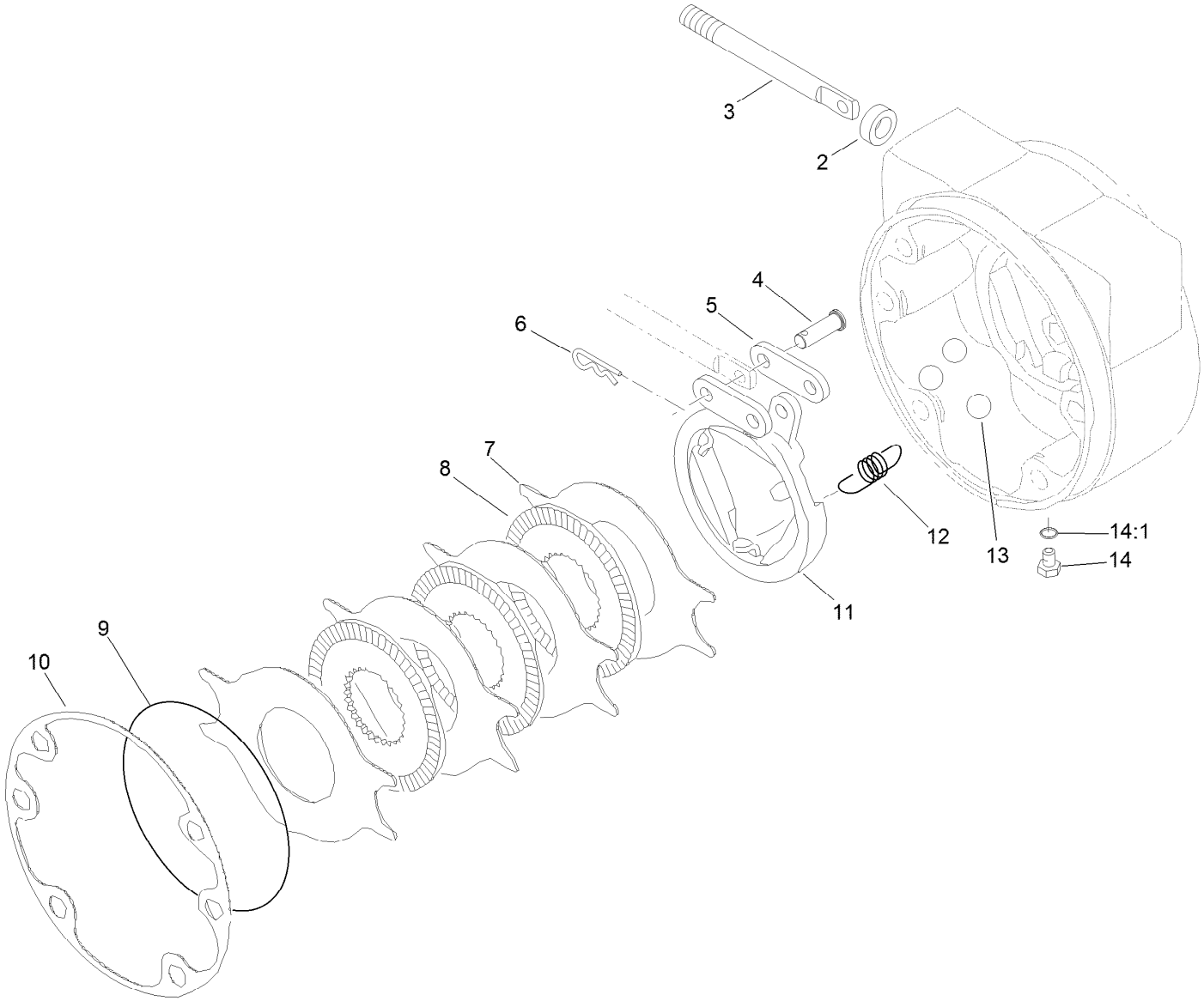


# RH Brake Assembly No. 100-3069

| *Ref.* | *Part Number* | *Qty.* | *Description* |
|---|---|---|---|
| 2 | 93-7977 | 1 | Seal |
| 3 | 93-7978 | 1 | Rod-Pull |
| 4 | 93-7983 | 2 | Pin-Clevis |
| 5 | 93-7980 | 2 | Link |
| 6 | 93-7979 | 2 | Pin-Hitch |
| 7 | 93-7986 | 4 | Disc-Stationary |
| 8 | 104-4278 | 3 | Disc-Rotating |
| 9 | 93-7976 | 1 | Ring-Retaining |
| 10 | 93-7984 | 1 | Gasket |
| 11 | 104-4280 | 1 | Actuator-Rotating |
| 12 | 93-7987 | 3 | Spring-Extension |
| 13 | 93-7985 | 3 | Ball |
| 14 | 353-990 | 2 | Plug ASM |
| 14:1 | 237-78 | 1 | O-Ring |

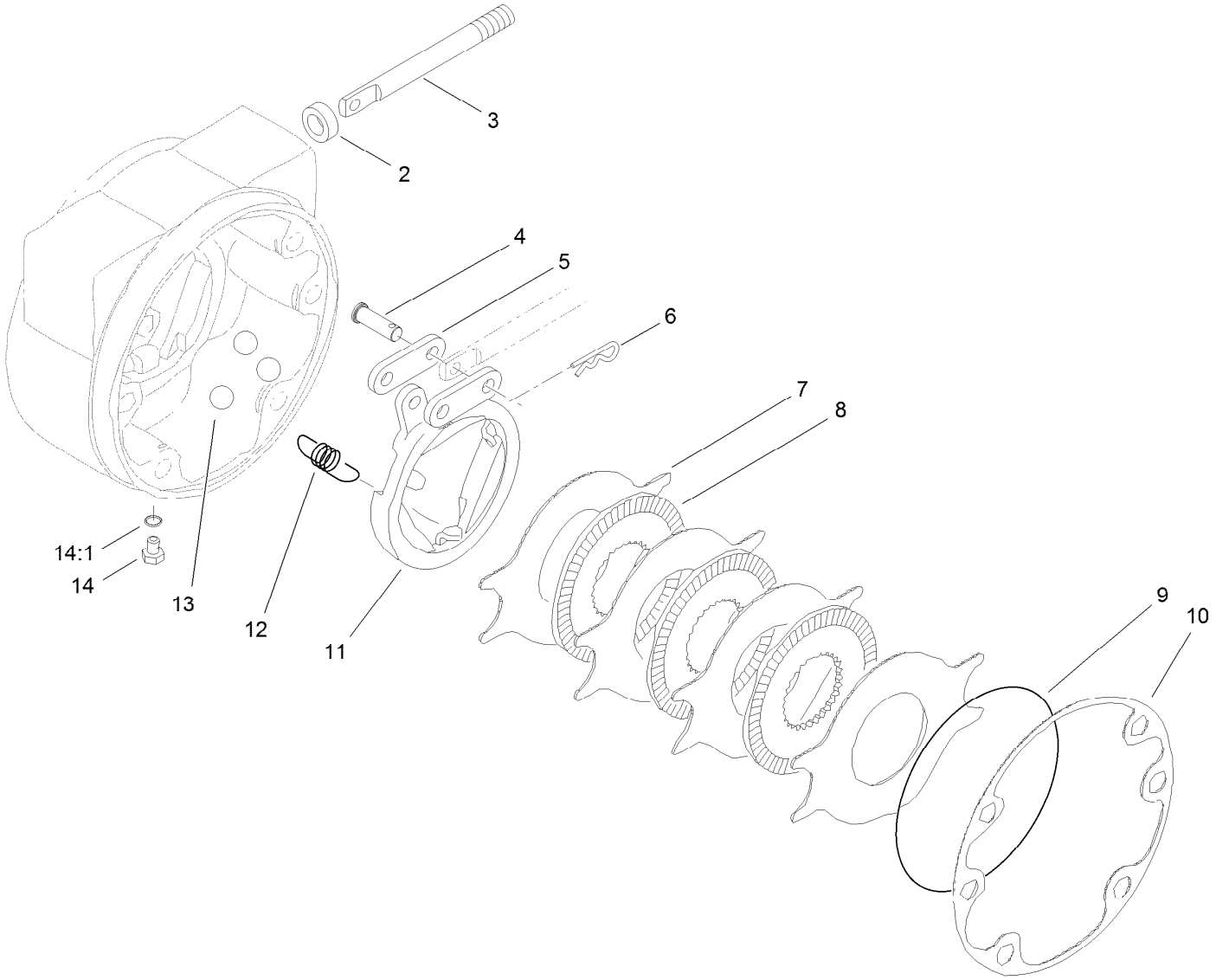


# LH Brake Assembly No. 100-3070

| Ref. | Part Number | Qty. | Description |
|---|---|---|---|
| 2 | 93-7977 | 1 | Seal |
| 3 | 93-7978 | 1 | Rod-Pull |
| 4 | 93-7983 | 2 | Pin-Clevis |
| 5 | 93-7980 | 2 | Link |
| 6 | 93-7979 | 2 | Pin-Hitch |
| 7 | 93-7986 | 4 | Disc-Stationary |
| 8 | 104-4278 | 3 | Disc-Rotating |
| 9 | 93-7976 | 1 | Ring-Retaining |
| 10 | 93-7984 | 1 | Gasket |
| 11 | 104-4279 | 1 | Actuator-Rotating |
| 12 | 93-7987 | 3 | Spring-Extension |
| 13 | 93-7985 | 3 | Ball |
| 14 | 353-990 | 2 | Plug ASM |
| 14:1 | 237-78 | 1 | O-Ring |

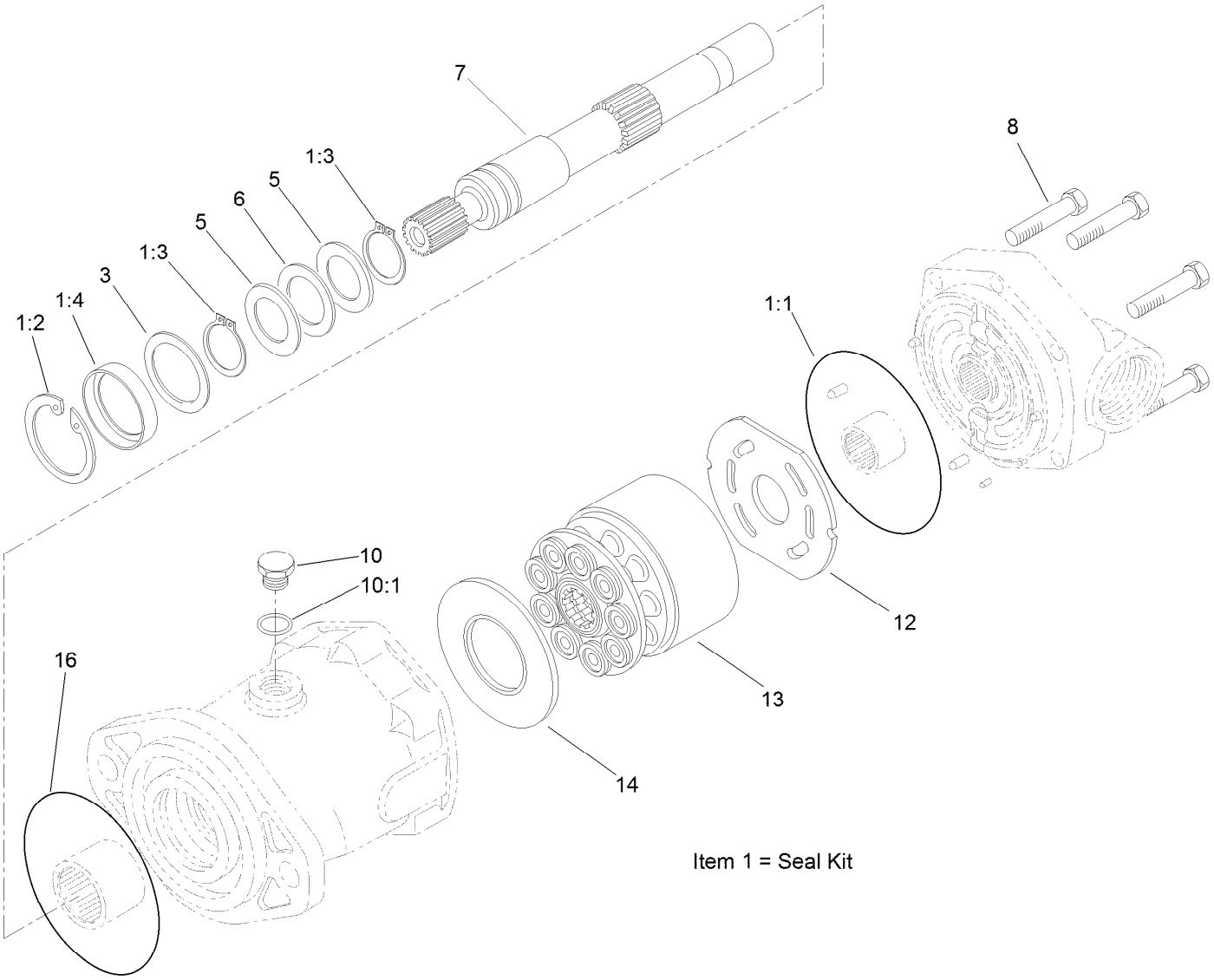


# Hydraulic Motor Assembly No. 132-5631

| Ref. | Part Number | Qty. | Description |
|---|---|---|---|
| 1 | 106-6876 | 1 | Seal Kit |
| 1:1 | | 1 | O-Ring ● ■ |
| 1:2 | 76-7010 | 1 | Ring-Retaining ● |
| 1:3 | 76-7000 | 2 | Ring-Retaining ● |
| 1:4 | | 1 | Seal-Shaft ● ■ |
| 3 | 60-6240 | 1 | Washer |
| 5 | 76-6950 | 2 | Race-Thrust |
| 6 | 76-6960 | 1 | Bearing-Thrust |

| Ref. | Part Number | Qty. | Description |
|---|---|---|---|
| 7 | 94-3004 | 1 | Shaft-Drive, Splined |
| 8 | 94-3002 | 6 | Screw-Cap |
| 10 | 94-3009 | 1 | Plug |
| 10:1 | | 1 | O-Ring ■ |
| 12 | 94-3003 | 1 | Plate-Valve |
| 13 | 76-6910 | 1 | Rotating Kit |
| 14 | 76-6970 | 1 | Insert-Plate, Cam |
| 16 | 237-166 | 1 | O-Ring |

● Not illustrated

■ Not serviced separately

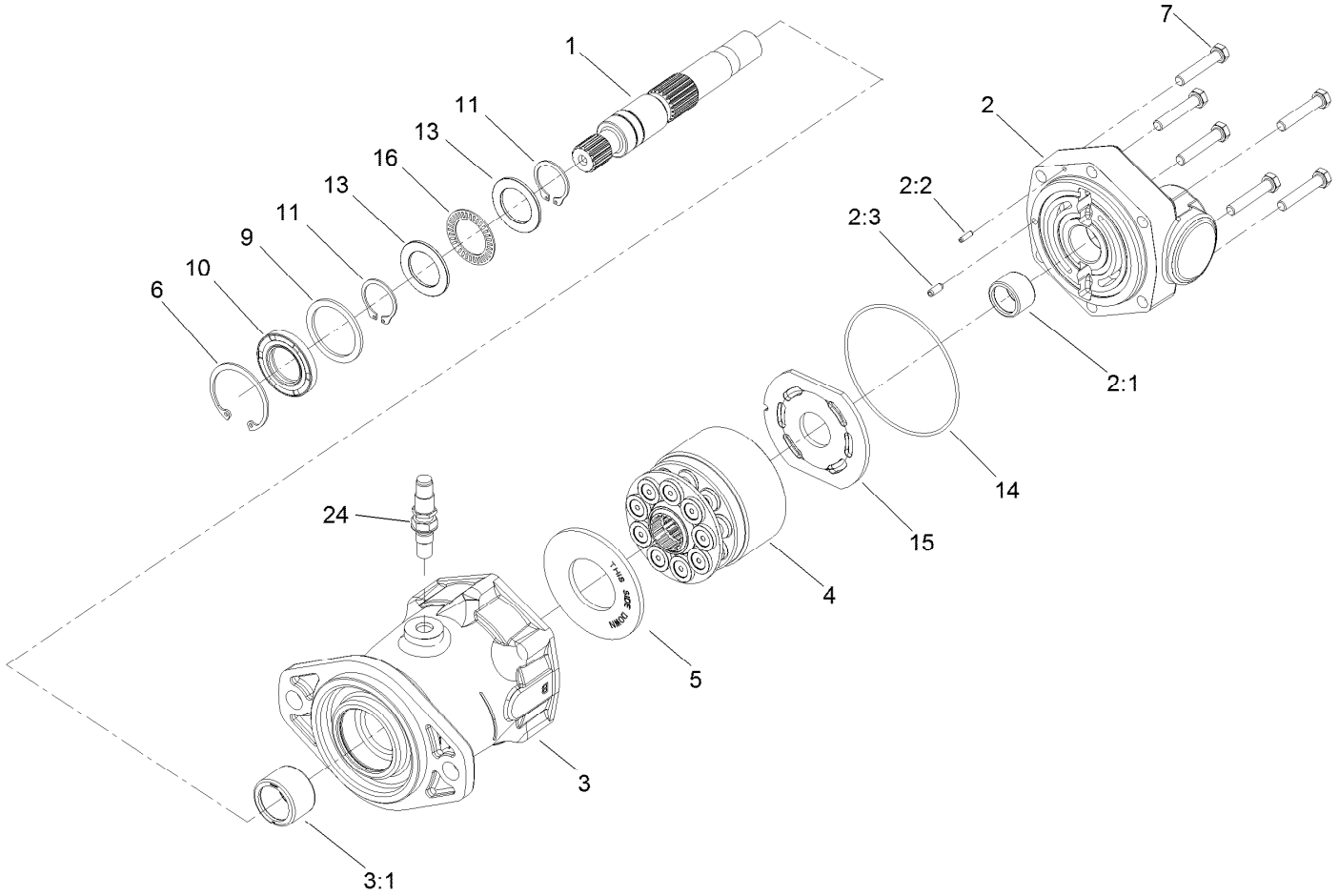


# Hydraulic Motor Assembly No. 136-2373

| Ref. | Part Number | Qty. | Description |
|---|---|---|---|
| 1 | 94-3004 | 1 | Shaft-Drive, Splined |
| 2 | 136-2366 | 1 | Backplate ASM |
| 2:1 | 136-2367 | 1 | Bearing |
| 2:2 | 136-2369 | 1 | Pin-Roll |
| 2:3 | 136-2370 | 1 | Pin-Roll |
| 3 | 136-2365 | 1 | Housing ASM |
| 3:1 | 136-2368 | 1 | Bearing |
| 4 | 76-6910 | 1 | Rotating Kit |
| 5 | 76-6970 | 1 | Insert-Plate, Cam |
| 6 | 76-7010 | 1 | Ring-Retaining |
| 7 | 94-3002 | 6 | Screw-Cap |
| 9 | 60-6240 | 1 | Washer |

| Ref. | Part Number | Qty. | Description |
|---|---|---|---|
| 10 | 106-6876 | 1 | Seal Kit |
| 10:1 | | 1 | O-Ring ■ ● |
| 10:2 | 76-7010 | 1 | Ring-Retaining ● |
| 10:3 | 76-7000 | 2 | Ring-Retaining ● |
| 10:4 | | 1 | Seal-Shaft ■ ● |
| 11 | 76-7000 | 2 | Ring-Retaining |
| 13 | 76-6950 | 2 | Race-Thrust |
| 14 | 76-6980 | 1 | O-Ring |
| 15 | 94-3003 | 1 | Plate-Valve |
| 16 | 76-6960 | 1 | Bearing-Thrust |
| 24 | 136-2270 | 1 | Sensor-Speed, Wheel |

● Not illustrated

■ Not serviced separately

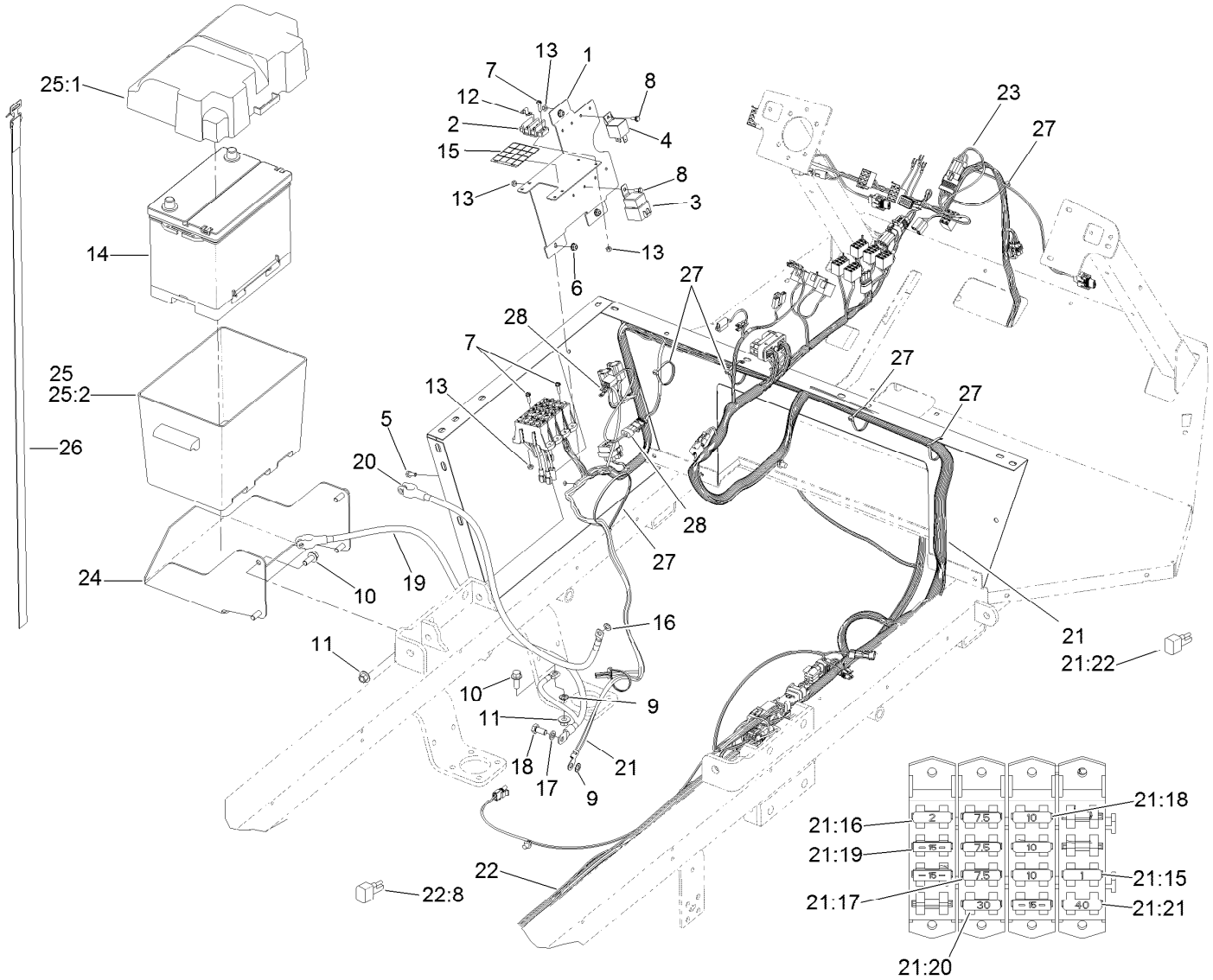


# Electrical Assembly

| Ref. | Part Number | Qty. | Description |
|---|---|---|---|
| 1 | 133-2757-01 | 1 | Panel-Electrical |
| 2 | 42862 | 1 | Block-Terminal, Ground |
| 3 | 99-7430 | 1 | Relay-Mini 280 |
| 4 | 99-7435 | 1 | Relay |
| 5 | 321-3 | 3 | Screw-HH |
| 6 | 104-7201 | 3 | Nut-HF |
| 7 | 32105-13 | 4 | Screw-HWH |
| 8 | 3290-321 | 2 | Screw-HWH |
| 9 | 3255-9 | 2 | Washer-Lock |
| 10 | 3234-11 | 5 | Screw-HHF |
| 11 | 32128-43 | 5 | Nut-Flange |
| 12 | 42863 | 1 | Strip-Jumper |
| 13 | 3296-2 | 6 | Nut-Lock, NI |
| 14 | 106-5190 | 1 | Battery |
| 15 | 133-2758 | 1 | Decal-Fuse |
| 16 | 3255-8 | 1 | Washer-Lock |
| 17 | 48-9590 | 1 | Washer-Lock |
| 18 | 63-7790 | 1 | Screw-Cap |
| 19 | 120-0615 | 1 | Cable-Battery, Negative |
| 20 | 105-0114 | 1 | Cable-Battery, Positive |

| Ref. | Part Number | Qty. | Description |
|---|---|---|---|
| 21 | 122-0671 | 1 | Harness-Wire |
| 21:15 | 104-9055 | 1 | Fuse-Blade, 1 Amp |
| 21:16 | 94-6710 | 1 | Fuse-2 Amp |
| 21:17 | 114241 | 3 | Fuse-Blade, 7.5 Amp |
| 21:18 | 218-578 | 3 | Fuse-Blade, 10 Amp |
| 21:19 | 109355 | 3 | Fuse-Blade, 15 Amp |
| 21:20 | 109103 | 1 | Fuse-Blade, 30 Amp |
| 21:21 | 99-6124 | 1 | Fuse-40 Amp |
| 21:22 | 100-4918 | 2 | Diode |
| 22 | 122-0694 | 1 | Harness-Wire, Rear |
| 22:8 | 100-4918 | 4 | Diode |
| 23 | 122-0695 | 1 | Harness-Wire, Auto/MAN |
| 24 | 119-5049-03 | 1 | Bracket-Battery |
| 25 | 93-7595 | 1 | Battery Box ASM |
| 25:1 | 105-2914 | 1 | Top-Battery Box |
| 25:2 | 105-2915 | 1 | Bottom-Battery Box |
| 26 | 3339-175 | 1 | Strapping-Web |
| 27 | 3290-379 | 6 | Tie-Cable |
| 28 | 108-8657 | 1 | Harness-Wire, Seat |

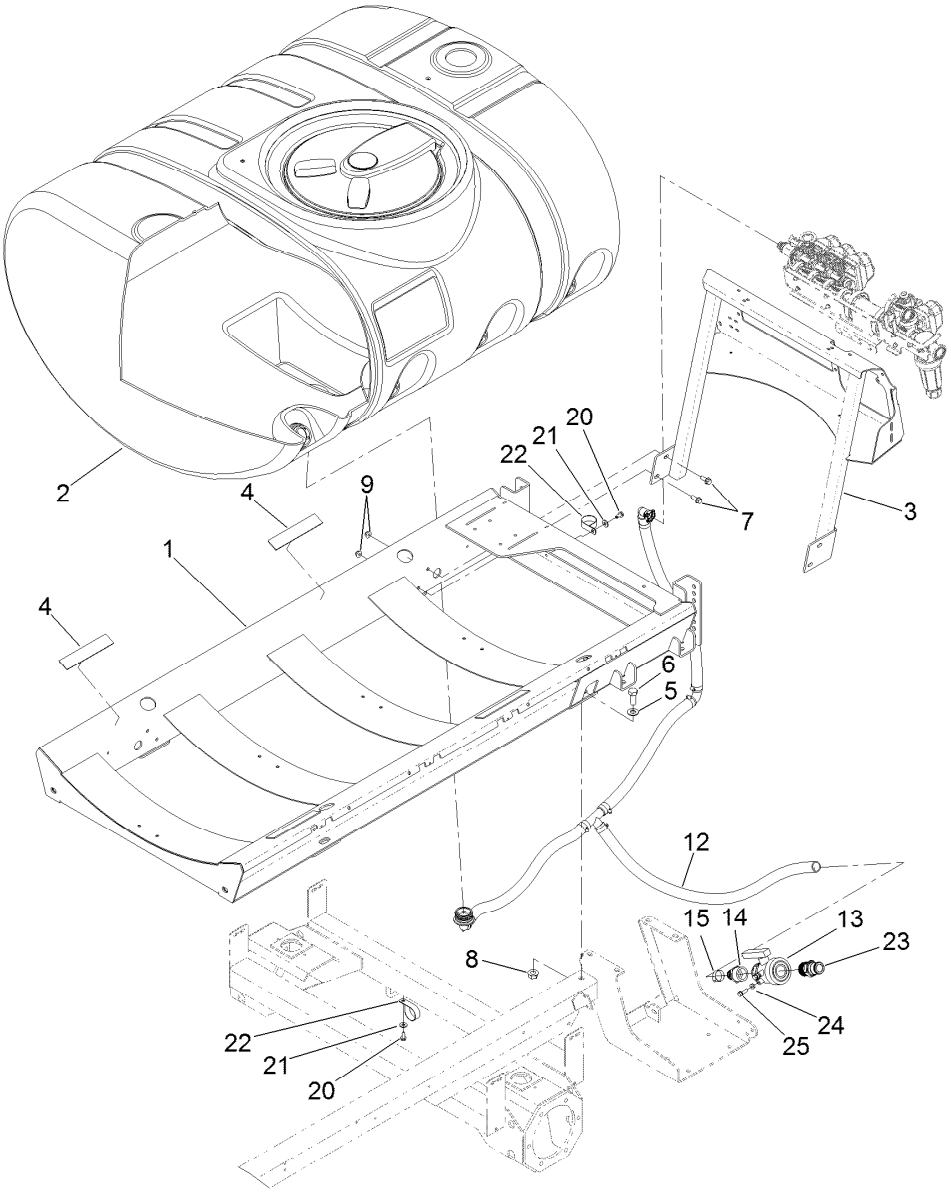


# Tank and Saddle Assembly

| Ref. | Part Number | Qty. | Description |
|---|---|---|---|
| 1 | 130-7092-03 | 1 | Tank Saddle ASM |
| 2 | 117-8005 | 1 | Tank ASM |
| 3 | 136-2289-03 | 1 | Support-Valve |
| 4 | 104-7102 | 4 | Pad-Battery |
| 5 | 3256-27 | 4 | Washer-Flat |
| 6 | 327-4 | 4 | Screw-HH |
| 7 | 3234-11 | 4 | Screw-HHF |
| 8 | 32128-50 | 4 | Nut-Flange |
| 9 | 104-8301 | 4 | Nut-HF, NI |
| 12 | 132-4297 | 1 | Bypass Hose ASM |

| Ref. | Part Number | Qty. | Description |
|---|---|---|---|
| 13 | 108-0069 | 1 | Valve-Ball |
| 14 | 110-5224 | 1 | Fitting-Barbed, Straight |
| 15 | 2412-34 | 1 | Clamp-Hose |
| 20 | 32104-32 | 2 | Screw-HWH |
| 21 | 3256-3 | 2 | Washer-Flat |
| 22 | 2412-147 | 2 | Clamp-R |
| 23 | 132-7787 | 1 | Coupler-Quick |
| 24 | 32128-26 | 2 | Nut-Flange |
| 25 | 3234-29 | 2 | Screw-HHF |

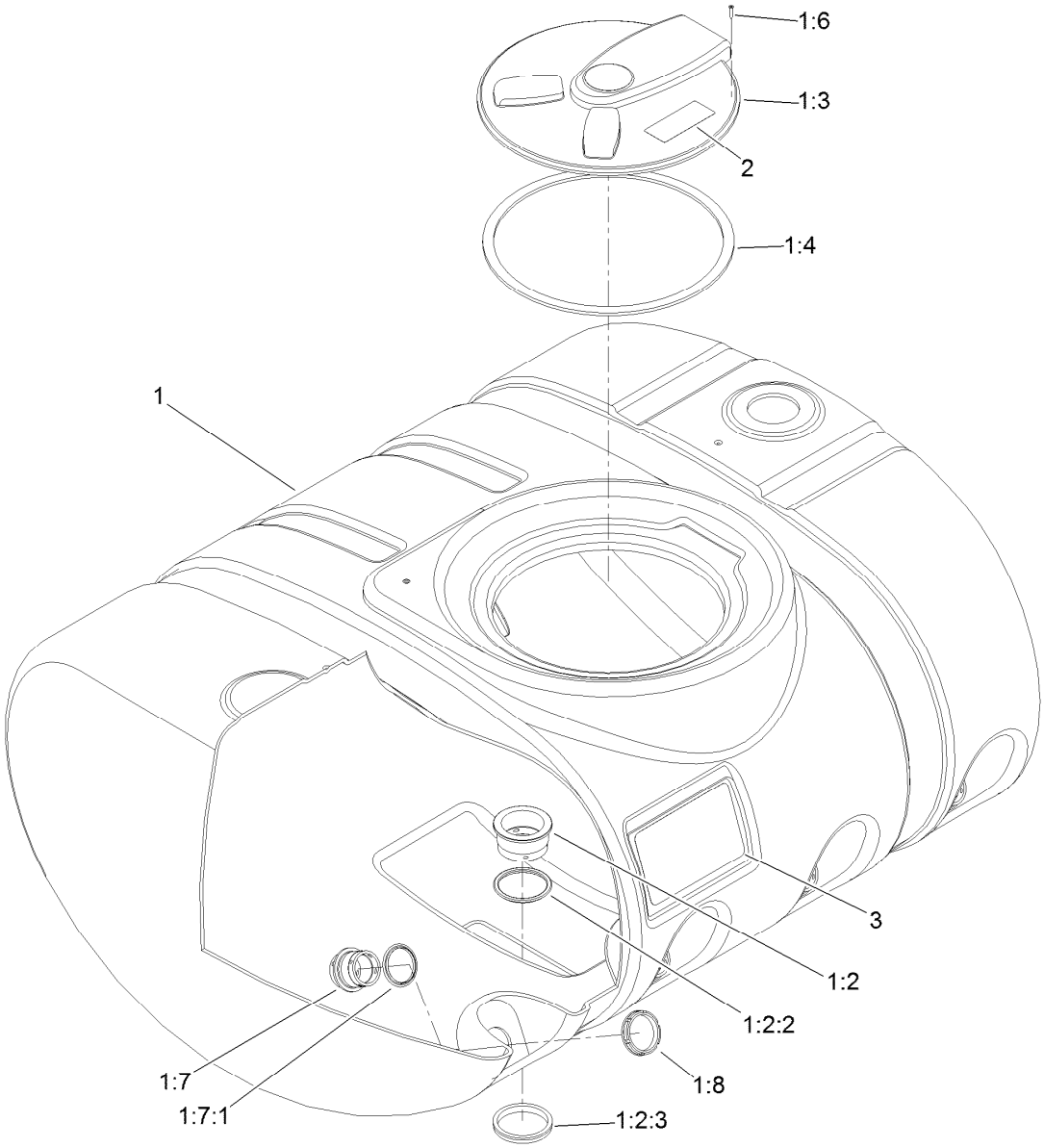


# Tank Assembly No. 117-8005

| Ref. | Part Number | Qty. | Description |
|---|---|---|---|
| 1 | | 1 | Tank ASM ● |
| 1:2 | 117-7851 | 1 | Bulkhead ASM |
| 1:2:2 | 100-8646 | 1 | Gasket-Bulkhead |
| 1:2:3 | 100-8647 | 1 | Nut-Bulkhead |
| 1:3 | 119-9380 | 1 | Spray Tank Lid ASM |
| 1:4 | 119-9378 | 1 | Gasket-Lid, Tank |
| 1:6 | 107-8635 | 8 | Screw-PFH |
| 1:7 | 108-3358 | 4 | Fitting-Bulkhead |
| 1:7:1 | 107-2864 | 1 | Gasket-Bulkhead |
| 1:8 | 100-7051 | 4 | Nut-Bulkhead |
| 2 | 120-0622 | 1 | Decal-Warning |
| 3 | 119-5042 | 2 | Decal-Tank |

● Not serviced separately

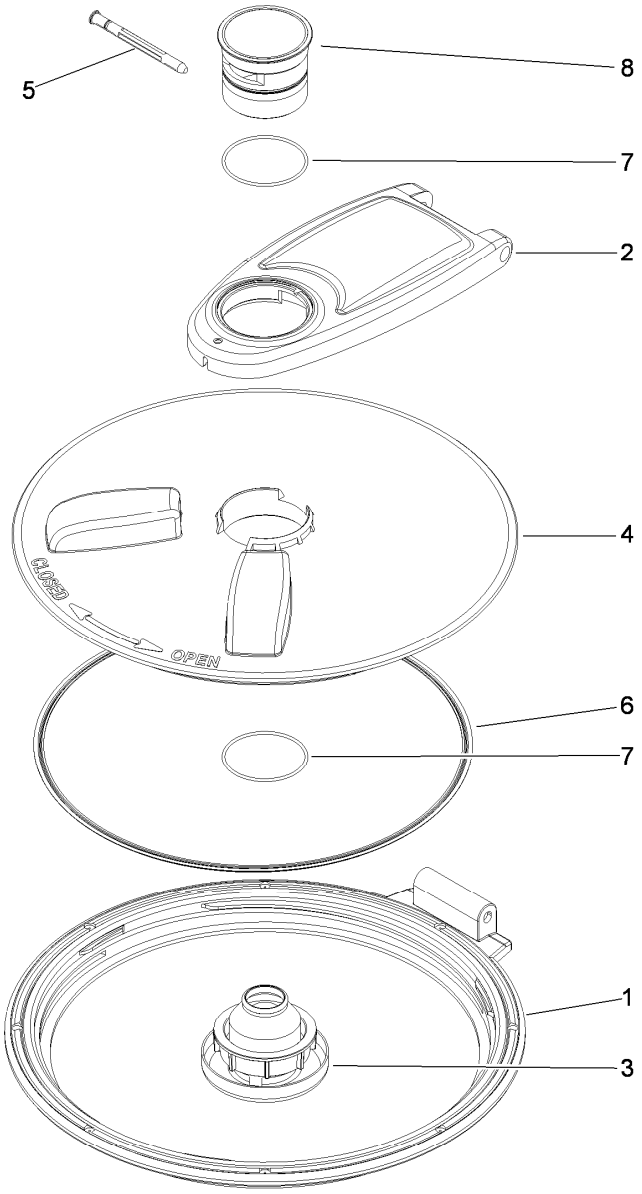


# Spray Tank Lid Assembly No. 119-9380

| *Ref.* | *Part Number* | *Qty.* | *Description* |
|---|---|---|---|
| 1 | 119-9381 | 1 | Ring-Lid |
| 2 | 119-9382 | 1 | Arm-Lid |
| 3 | 119-9383 | 1 | Vent-Lid |
| 4 | 119-9384 | 1 | Cover-Lid |
| 5 | 119-9385 | 1 | Pin-Pivot |
| 6 | 106-5004 | 1 | Seal-Lid |
| 7 | 119-9386 | 2 | O-Ring |
| 8 | 119-9387 | 1 | Cap-Lid |

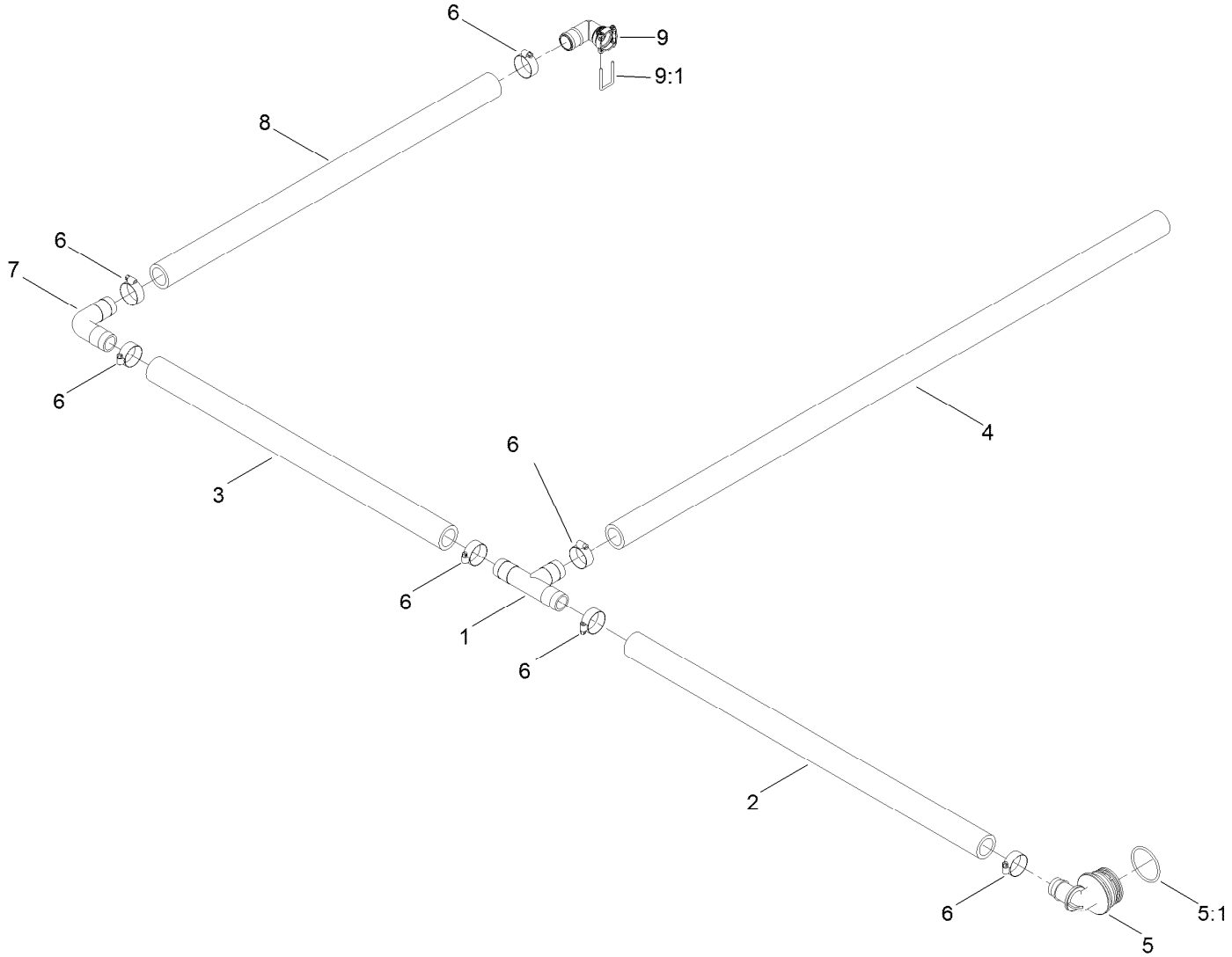


# Bypass Hose Assembly No. 132-4297

| *Ref.* | *Part Number* | *Qty.* | *Description* |
|---|---|---|---|
| 1 | 117-7866 | 1 | Tee-Hosebarb |
| 2 | 131-5775 | 1 | Hose-Drain |
| 3 | 131-5825 | 1 | Hose-Drain |
| 4 | 131-5777 | 1 | Hose-Drain |
| 5 | 106-4933 | 1 | Hosebarb ASM |
| 5:1 | 100-8637 | 1 | O-Ring |
| 6 | 2412-34 | 7 | Clamp-Hose |
| 7 | 117-7867 | 1 | Elbow-Hosebarb |
| 8 | 131-5824 | 1 | Hose-Drain |
| 9 | 131-0213 | 1 | 90 DEG Barb Fitting Kit |
| 9:1 | 133-0398 | 1 | Pin-Fork |

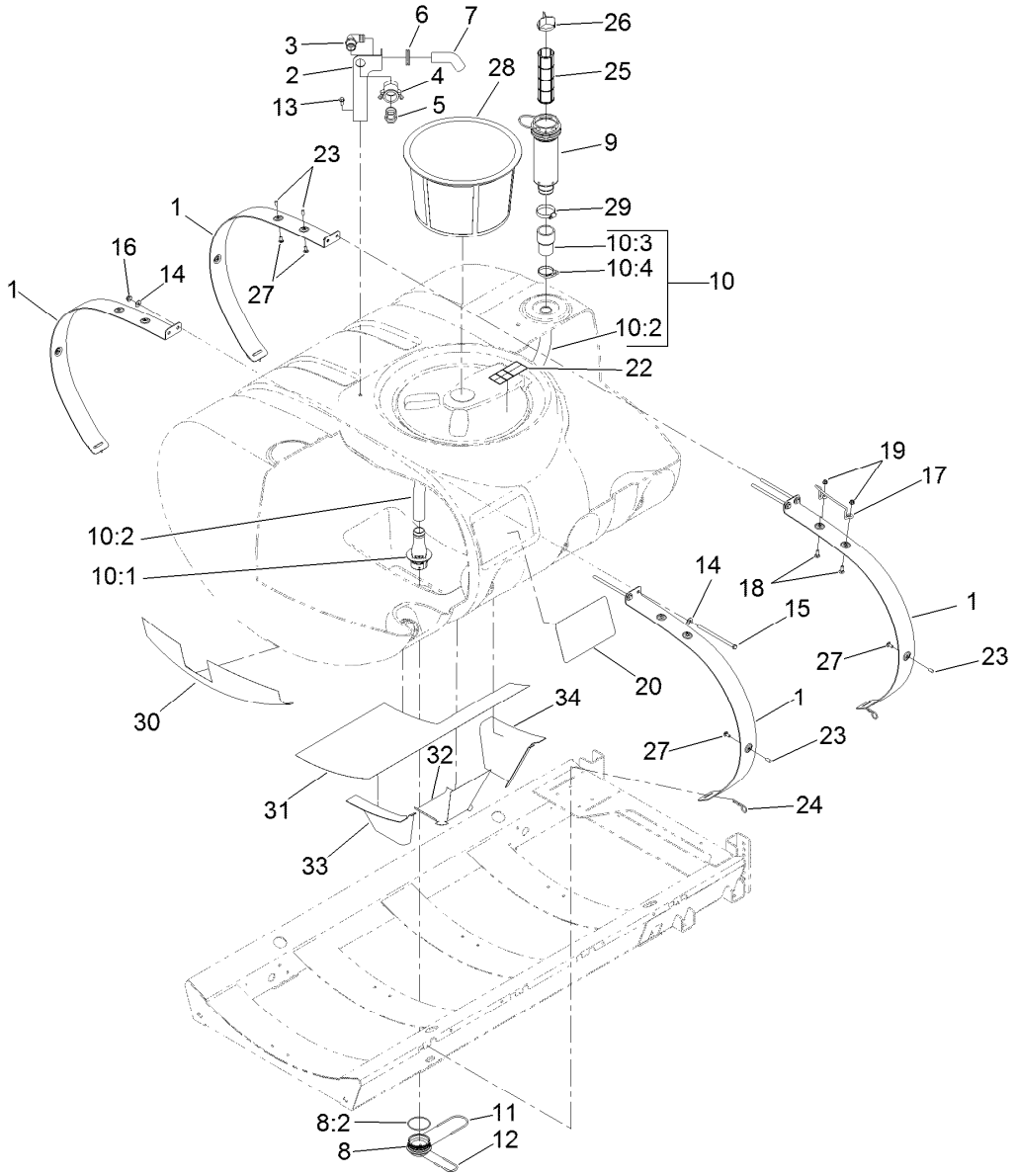


# Tank Mounting and Filter Assembly

| Ref. | Part Number | Qty. | Description |
|---|---|---|---|
| 1 | 117-8029-03 | 4 | Band-Tank |
| 2 | 110-5082-03 | 1 | Bracket-Anti Siphon |
| 3 | 41140 | 1 | Elbow |
| 4 | 100-6779 | 1 | Coupling-Female |
| 5 | 41316 | 1 | Adapter-Quick |
| 6 | 110-5090 | 1 | Grommet |
| 7 | 110-5088 | 1 | Hose-Fill |
| 8 | 117-7928 | 1 | Adapter ASM |
| 8:2 | 100-6989 | 1 | O-Ring |
| 9 | 130-7096 | 1 | Filter ASM |
| 10 | 121-5003 | 1 | Suction Tube ASM |
| 10:1 | 121-5008 | 1 | Foot-Suction |
| 10:2 | 121-5030 | 1 | Tube-Suction |
| 10:3 | 121-5031 | 1 | Connector-Suction |
| 10:4 | 121-5047 | 1 | Clamp-Nylon |
| 11 | 117-7996 | 1 | Fork |
| 12 | 100-8635 | 1 | Fork |
| 13 | 3234-5 | 1 | Screw-HHF |
| 14 | 3256-4 | 8 | Washer-Flat |
| 15 | 120-0649 | 4 | Bolt-TAP HH |
| 16 | 104-8301 | 4 | Nut-HF, NI |

| Ref. | Part Number | Qty. | Description |
|---|---|---|---|
| 17 | 119-5019 | 1 | Stop-Lid |
| 18 | 3230-2 | 2 | Bolt-CARR |
| 19 | 104-8300 | 2 | Nut-HF, NI |
| 20 | 131-3316 | 2 | Decal-Tank |
| 22 | 120-0622 | 1 | Decal-Warning |
| 23 | 42452 | 5 | Cap-Protective |
| 24 | 3290-343 | 4 | Pin-Hair |
| 25 | 100-6991 | 1 | Element-Filter, Green |
| 25 | 100-6992 | 1 | Element-Filter, Red |
| 25 | 100-8642 | 1 | Screen-Suction |
| 26 | 100-8641 | 1 | Vane-Screen |
| 27 | 3230-1 | 5 | Bolt-CARR |
| 28 | 119-9419 | 1 | Basket-Filter |
| 29 | 2412-130 | 1 | Clamp-Hose |
| 30 | 130-7139 | 1 | Shield-Heat Tape, Front |
| 31 | 130-7140 | 1 | Shield-Heat Tape, Bottom |
| 32 | 130-7141 | 1 | Shield-Heat Tape, Sump |
| 33 | 131-3298 | 1 | Shield-Heat Tape, Sump, Front |
| 34 | 131-3299 | 1 | Shield-Heat Tape, Sump, Rear |

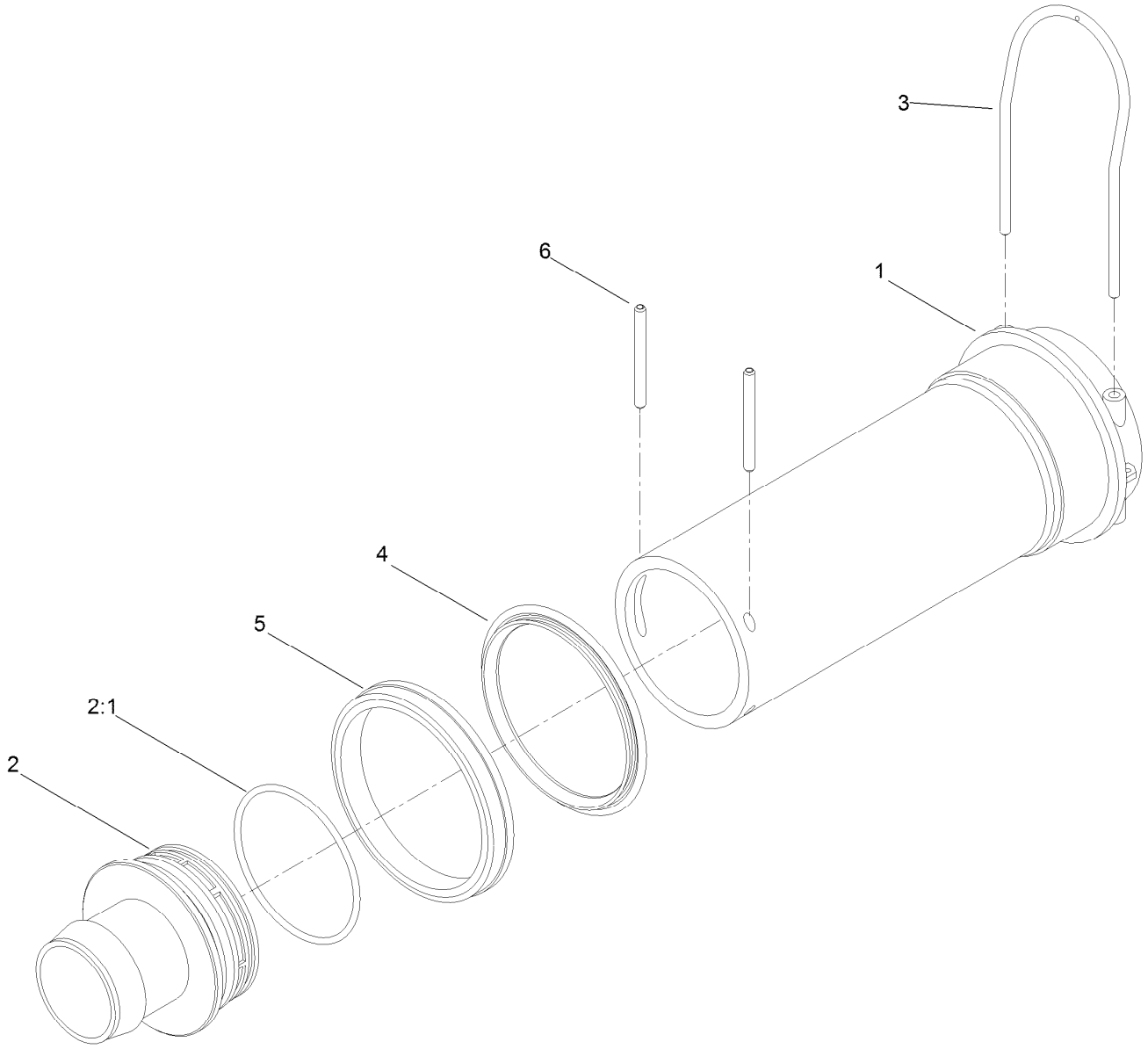


# Filter Assembly No. 130-7096

| *Ref.* | *Part Number* | *Qty.* | *Description* |
|---|---|---|---|
| 1 | 100-8643 | 1 | Housing-Filter |
| 2 | 106-4942 | 1 | Hosebarb-Straight |
| 2:1 | 100-6989 | 1 | O-Ring |
| 3 | 100-8636 | 1 | Fork-Special |
| 4 | 100-8646 | 1 | Gasket-Bulkhead |
| 5 | 100-8647 | 1 | Nut-Bulkhead |
| 6 | 100-8644 | 2 | Pin-Expansion |

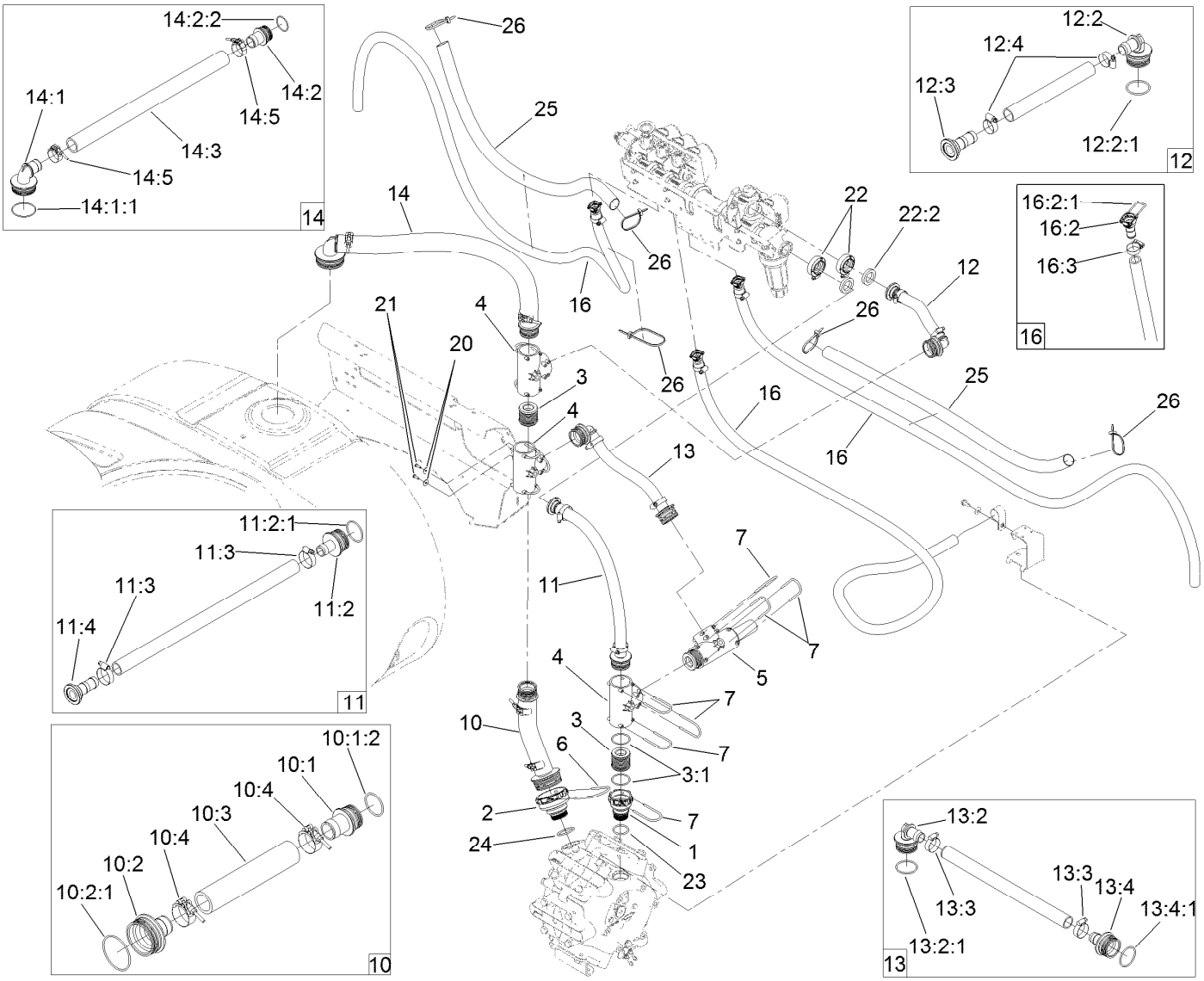


# Spray System Hose Assembly

| Ref. | Part Number | Qty. | Description |
|---|---|---|---|
| 1 | 133-2881 | 1 | Fitting |
| 2 | 133-2883 | 1 | Fitting |
| 3 | 106-4947 | 2 | Connector |
| 3:1 | 100-8637 | 2 | O-Ring |
| 4 | 100-6704 | 3 | Tee |
| 5 | 117-7874 | 1 | Relief Valve ASM |
| 6 | 117-7996 | 1 | Fork |
| 7 | 100-8635 | 11 | Fork |
| 10 | 130-7128 | 1 | Lower Suction Hose ASM |
| 10:1 | 117-7982 | 1 | Hosebarb ASM |
| 10:1:2 | 100-8637 | 1 | O-Ring |
| 10:2 | 117-7965 | 1 | Hosebarb ASM |
| 10:2:1 | 100-6989 | 1 | O-Ring |
| 10:3 | 127-8982 | 1 | Hose-Suction, Lower |
| 10:4 | 130-7125 | 2 | Clamp, T-Bolt |
| 11 | 132-4295 | 1 | Supply Hose ASM |
| 11:2 | 106-4932 | 1 | Hosebarb-Straight |
| 11:2:1 | 100-8637 | 1 | O-Ring |
| 11:3 | 2412-3 | 2 | Clamp-Hose |
| 11:4 | 127-1142 | 1 | Fitting-Barb |
| 12 | 132-4296 | 1 | Agitation Bypass Hose ASM |

| Ref. | Part Number | Qty. | Description |
|---|---|---|---|
| 12:2 | 106-4933 | 1 | Hosebarb ASM |
| 12:2:1 | 100-8637 | 1 | O-Ring |
| 12:3 | 127-1142 | 1 | Fitting-Barb |
| 12:4 | 2412-129 | 2 | Clamp-Hose |
| 13 | 117-7963 | 1 | Pressure Relief Hose ASM |
| 13:2 | 106-4933 | 2 | Hosebarb ASM |
| 13:2:1 | 100-8637 | 1 | O-Ring |
| 13:3 | 2412-3 | 2 | Clamp-Hose |
| 13:4 | 106-4932 | 1 | Hosebarb-Straight |
| 13:4:1 | 100-8637 | 1 | O-Ring |
| 14 | 130-7127 | 1 | Upper Suction Hose ASM |
| 14:1 | 106-4952 | 1 | Hosebarb-90 DEG |
| 14:1:1 | 100-6989 | 1 | O-Ring |
| 14:2 | 117-7982 | 1 | Hosebarb ASM |
| 14:2:2 | 100-8637 | 1 | O-Ring |
| 14:3 | 127-8981 | 1 | Hose-Suction, Upper |
| 14:5 | 130-7125 | 2 | Clamp, T-Bolt |
| 16 | 132-4298 | 3 | Left Boom Hose ASM |
| 16:2 | 127-9807 | 1 | Straight Fitting Kit |
| 16:2:1 | 133-0398 | 1 | Pin-Fork |
| 16:3 | 2412-129 | 1 | Clamp-Hose |

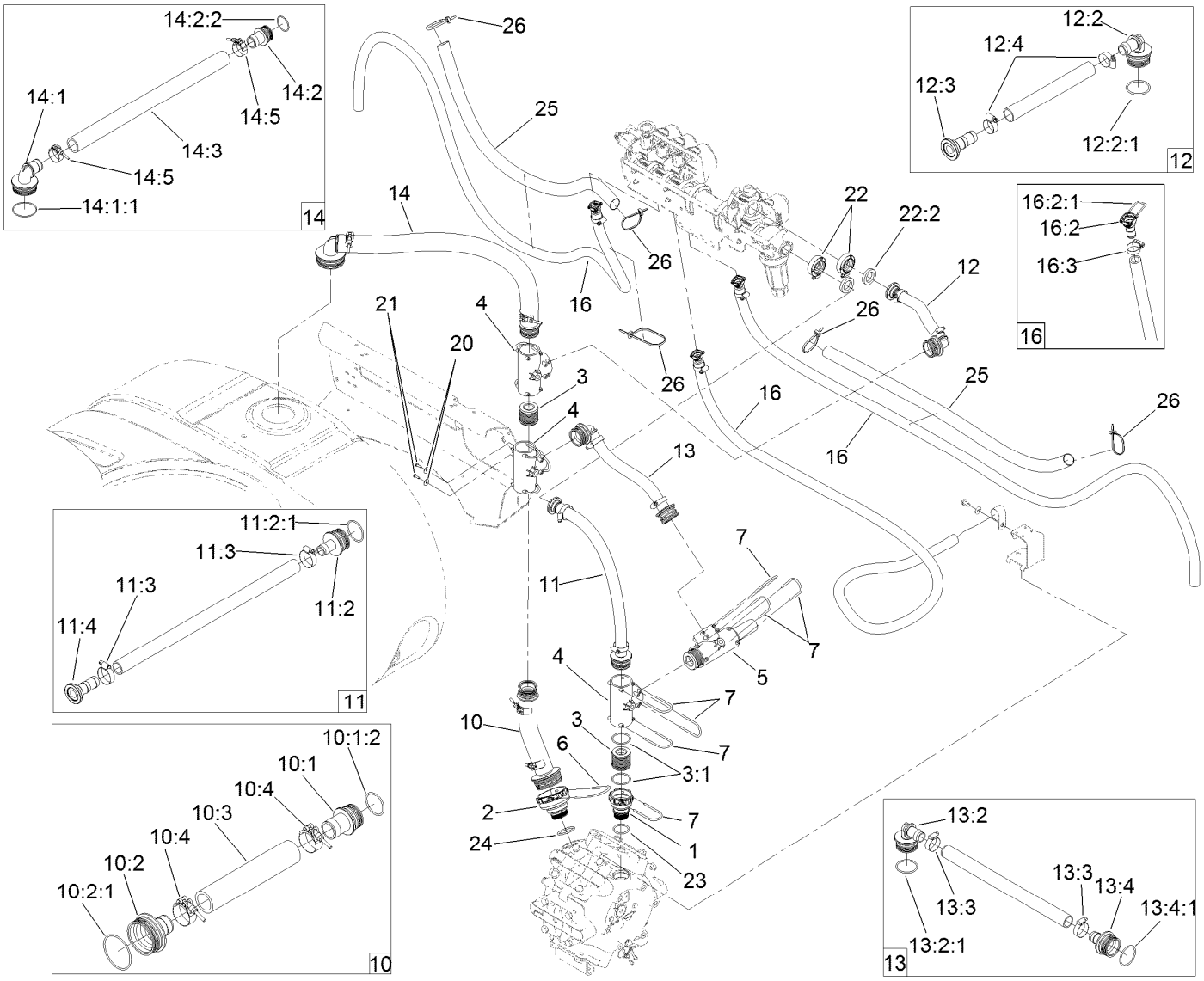


# Spray System Hose Assembly (continued)

| Ref. | Part Number | Qty. | Description |
|---|---|---|---|
| 20 | 3256-61 | 2 | Washer-Flat |
| 21 | 32144-32 | 2 | Screw |
| 22 | 127-9829 | 2 | Clamp/Gasket Kit |
| 22:2 | 127-1145 | 1 | Gasket-Flange |

| Ref. | Part Number | Qty. | Description |
|---|---|---|---|
| 23 | 133-2882 | 1 | O-Ring |
| 24 | 133-2884 | 1 | O-Ring |
| 25 | 107-8650 | 2 | Conduit-Convoluted |
| 26 | 3290-378 | 5 | Tie-Cable |

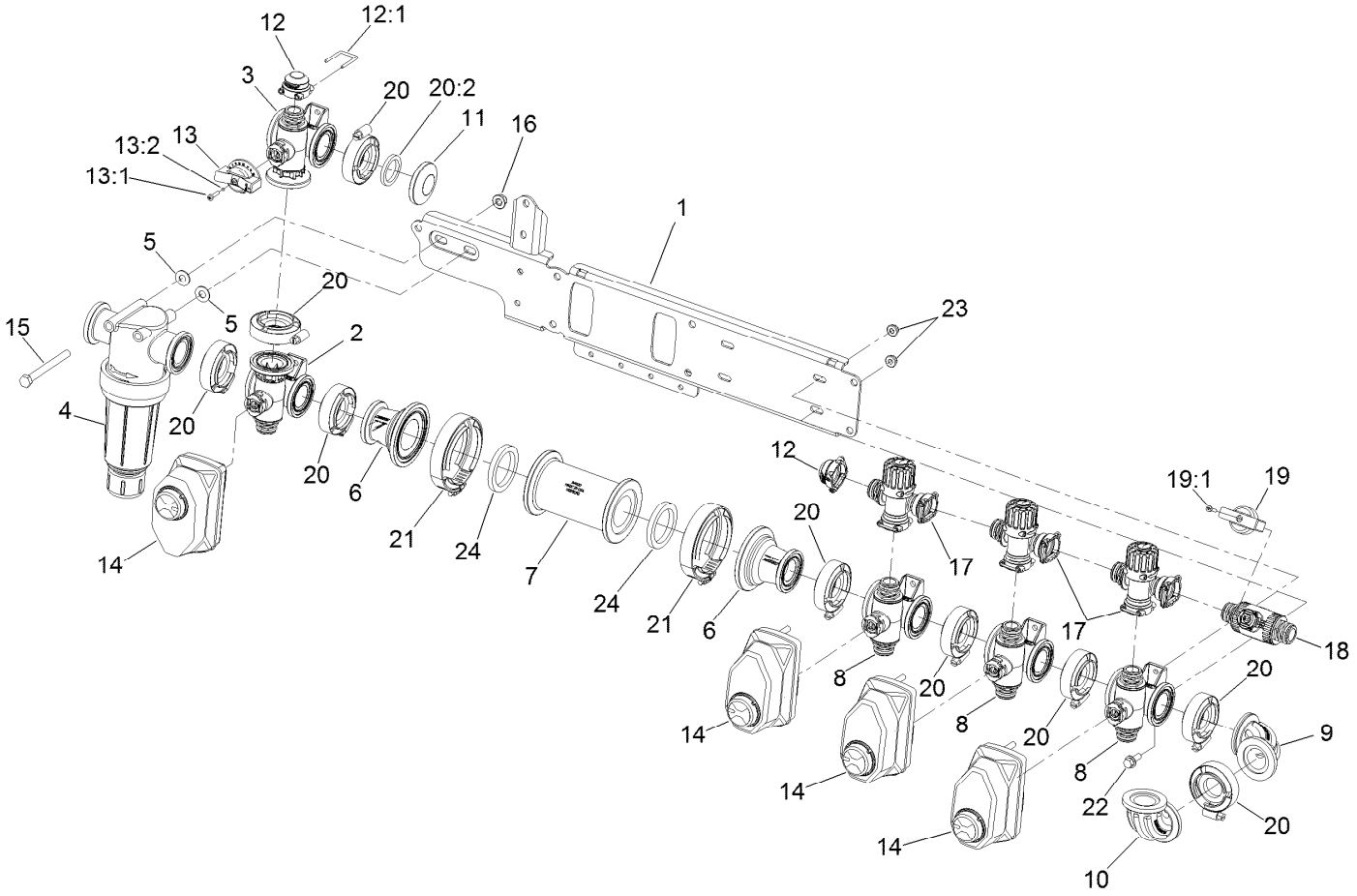


# Spray Manifold Assembly

| Ref. | Part Number | Qty. | Description |
|---|---|---|---|
| 1 | 133-2852 | 1 | Valve Mount ASM |
| 2 | 131-7256 | 1 | Manifold Valve Kit |
| 3 | 131-0253 | 1 | Manifold Valve Kit |
| 4 | 131-3791 | 1 | Filter-Pressure |
| 5 | 107-0279 | 2 | Washer |
| 6 | 127-1144 | 2 | Fitting-Adapter |
| 7 | 131-3739 | 1 | Adapter |
| 8 | 127-9803 | 3 | On/Off Manifold Valve Kit |
| 9 | 131-3726 | 1 | Fitting-Elbow, 90 DEG |
| 10 | 130-8297 | 1 | Fitting-Elbow, Sweep |
| 11 | 127-9815 | 1 | Fitting-Cap |
| 12 | 127-9811 | 2 | Fitting-Cap, Female |
| 12:1 | 133-0398 | 1 | Pin-Fork |
| 13 | 131-0265 | 1 | Agitation Regulating Handle Kit |

| Ref. | Part Number | Qty. | Description |
|---|---|---|---|
| 13:1 | 131-0263 | 1 | Screw-Handle |
| 13:2 | 127-1197 | 1 | O-Ring-Stem |
| 14 | 131-3723 | 4 | Actuator On/Off Kit |
| 15 | 322-22 | 2 | Screw-HH |
| 16 | 104-8300 | 2 | Nut-HF, NI |
| 17 | 127-9805 | 3 | Bypass Valve ASM |
| 18 | 131-0249 | 1 | On/Off 2-Way Valve Kit |
| 19 | 131-0267 | 1 | Bypass Handle Kit |
| 19:1 | 131-0263 | 1 | Screw-Handle |
| 20 | 127-9829 | 9 | Clamp/Gasket Kit |
| 20:2 | 127-1145 | 1 | Gasket-Flange |
| 21 | 104-9089 | 2 | Clamp-Screw, Worm |
| 22 | 3234-4 | 8 | Screw-HHF |
| 23 | 104-7201 | 8 | Nut-HF |
| 24 | 104-9090 | 2 | Gasket |

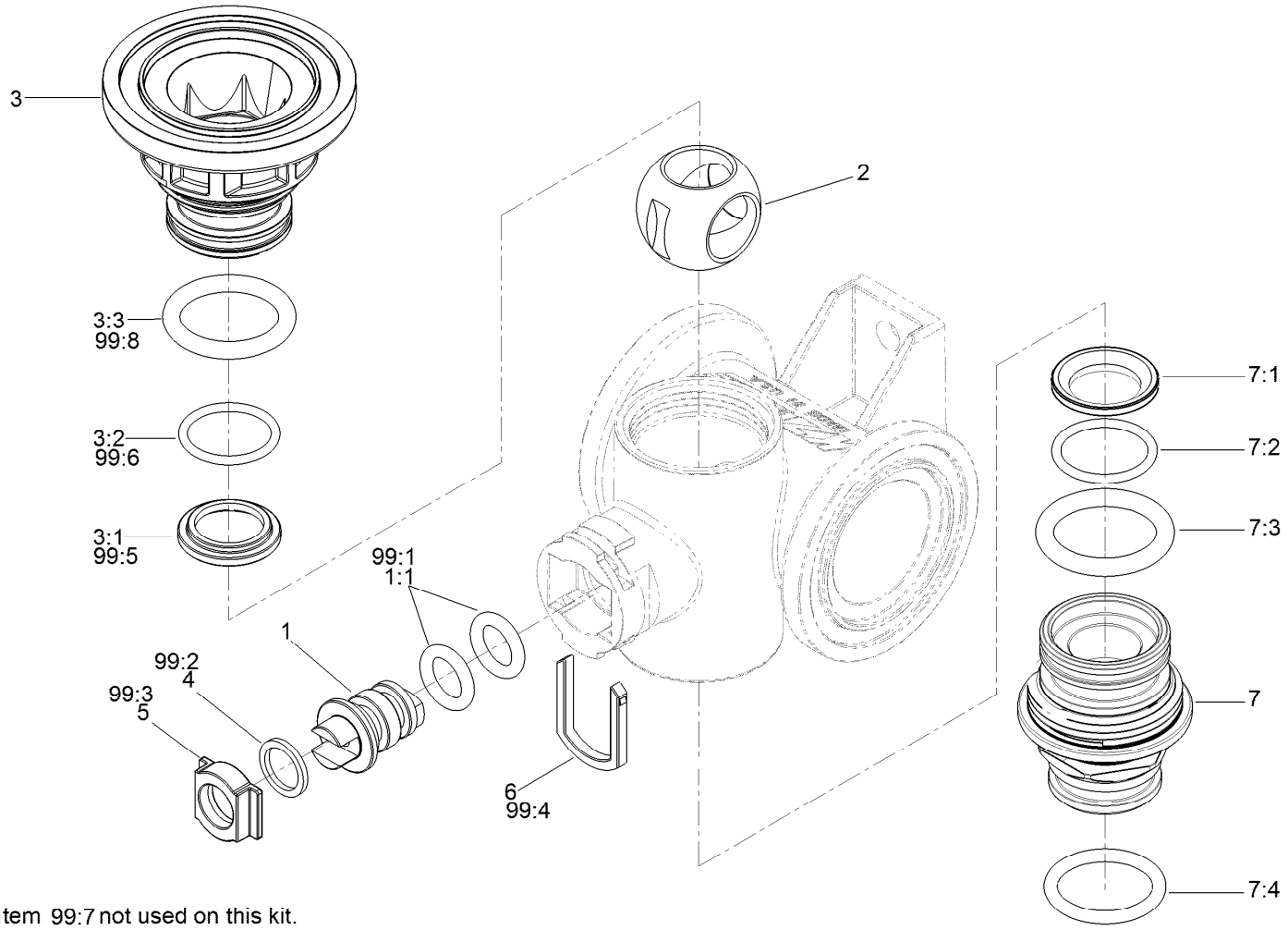


Item 99:7 not used on this kit.

# Manifold Valve Kit No. 131-7256

| Ref. | Part Number | Qty. | Description |
|---|---|---|---|
| 1 | 130-8248 | 1 | Vavle Stem Kit |
| 1:1 | 127-1197 | 2 | O-Ring-Stem |
| 2 | 127-1194 | 1 | Ball-Valve, 3Way |
| 3 | 130-8249 | 1 | Endcap Kit |
| 3:1 | 127-1192 | 1 | Seat-Ball |
| 3:2 | 127-1188 | 1 | O-Ring, Seat (Ball) |
| 3:3 | 127-1189 | 1 | O-Ring, Endcap |
| 4 | 127-1196 | 1 | Washer-Stem, Valve |
| 5 | 127-1195 | 1 | Seat-Stem, Valve |
| 6 | 127-1190 | 1 | Fork-Stem, Valve |
| 7 | 130-7317 | 1 | Endcap Kit |
| 7:1 | 127-1192 | 1 | Seat-Ball |

| Ref. | Part Number | Qty. | Description |
|---|---|---|---|
| 7:2 | 127-1188 | 1 | O-Ring, Seat (Ball) |
| 7:3 | 127-1189 | 1 | O-Ring, Endcap |
| 7:4 | 127-1187 | 1 | O-Ring, Endcap |
| 99 | 130-7304 | 1 | Valve Repair Kit ● |
| 99:1 | 127-1197 | 2 | O-Ring-Stem |
| 99:2 | 127-1196 | 2 | Washer-Stem, Valve |
| 99:3 | 127-1195 | 1 | Seat-Stem, Valve |
| 99:4 | 127-1190 | 1 | Fork-Stem, Valve |
| 99:5 | 127-1192 | 2 | Seat-Ball |
| 99:6 | 127-1188 | 2 | O-Ring, Seat (Ball) |
| 99:7 | 127-1187 | 2 | O-Ring, Endcap |
| 99:8 | 127-1189 | 2 | O-Ring, Endcap |

● Not illustrated

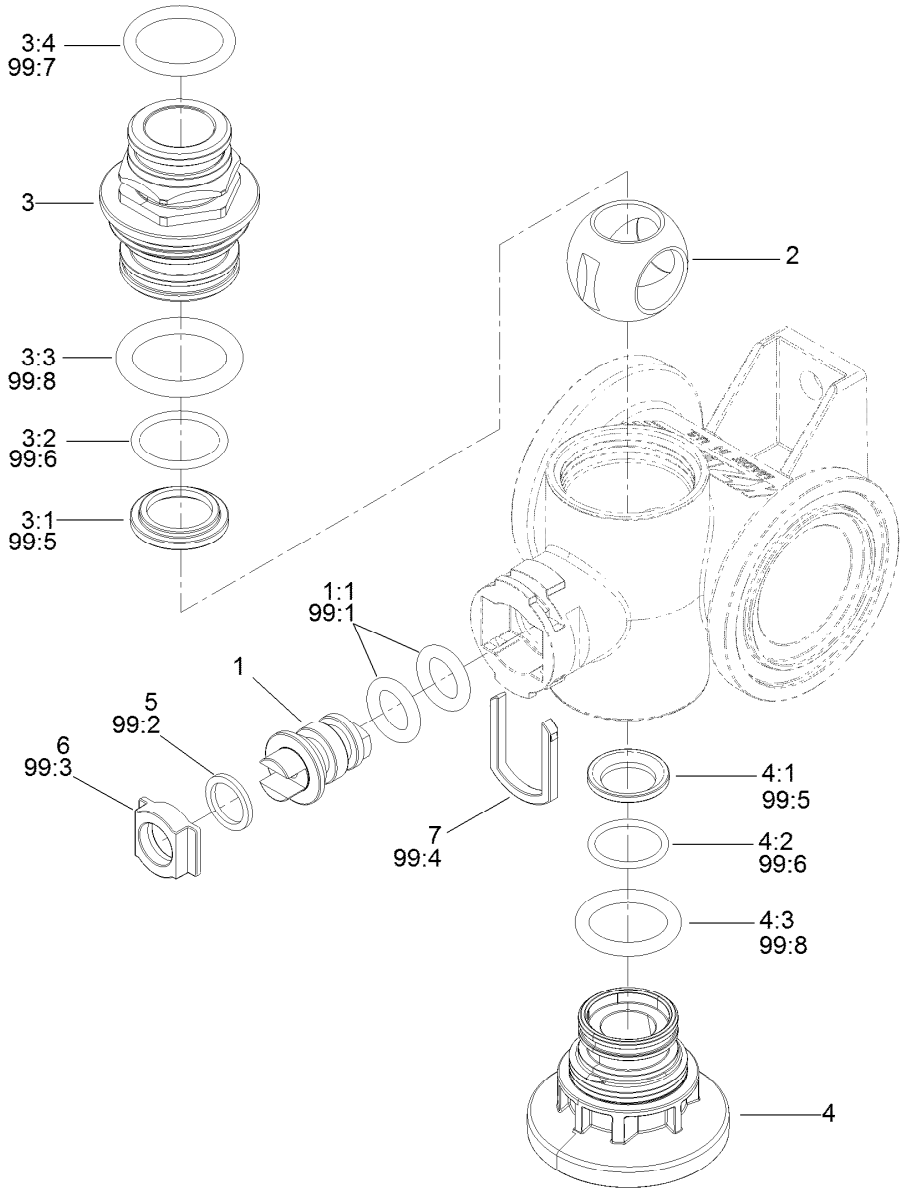


# Manifold Valve Kit No. 131-0253

| Ref. | Part Number | Qty. | Description |
|---|---|---|---|
| 1 | 130-8248 | 1 | Vavle Stem Kit |
| 1:1 | 127-1197 | 2 | O-Ring-Stem |
| 2 | 127-1113 | 1 | Ball-V |
| 3 | 130-7317 | 1 | Endcap Kit |
| 3:1 | 127-1192 | 1 | Seat-Ball |
| 3:2 | 127-1188 | 1 | O-Ring, Seat (Ball) |
| 3:3 | 127-1189 | 1 | O-Ring, Endcap |
| 3:4 | 127-1187 | 1 | O-Ring, Endcap |
| 4 | 130-8249 | 1 | Endcap Kit |
| 4:1 | 127-1192 | 1 | Seat-Ball |
| 4:2 | 127-1188 | 1 | O-Ring, Seat (Ball) |
| 4:3 | 127-1189 | 1 | O-Ring, Endcap |

| Ref. | Part Number | Qty. | Description |
|---|---|---|---|
| 5 | 127-1196 | 1 | Washer-Stem, Valve |
| 6 | 127-1195 | 1 | Seat-Stem, Valve |
| 7 | 127-1190 | 1 | Fork-Stem, Valve |
| 99 | 130-7304 | 1 | Valve Repair Kit ● |
| 99:1 | 127-1197 | 2 | O-Ring-Stem |
| 99:2 | 127-1196 | 2 | Washer-Stem, Valve |
| 99:3 | 127-1195 | 1 | Seat-Stem, Valve |
| 99:4 | 127-1190 | 1 | Fork-Stem, Valve |
| 99:5 | 127-1192 | 2 | Seat-Ball |
| 99:6 | 127-1188 | 2 | O-Ring, Seat (Ball) |
| 99:7 | 127-1187 | 2 | O-Ring, Endcap |
| 99:8 | 127-1189 | 2 | O-Ring, Endcap |

● Not illustrated

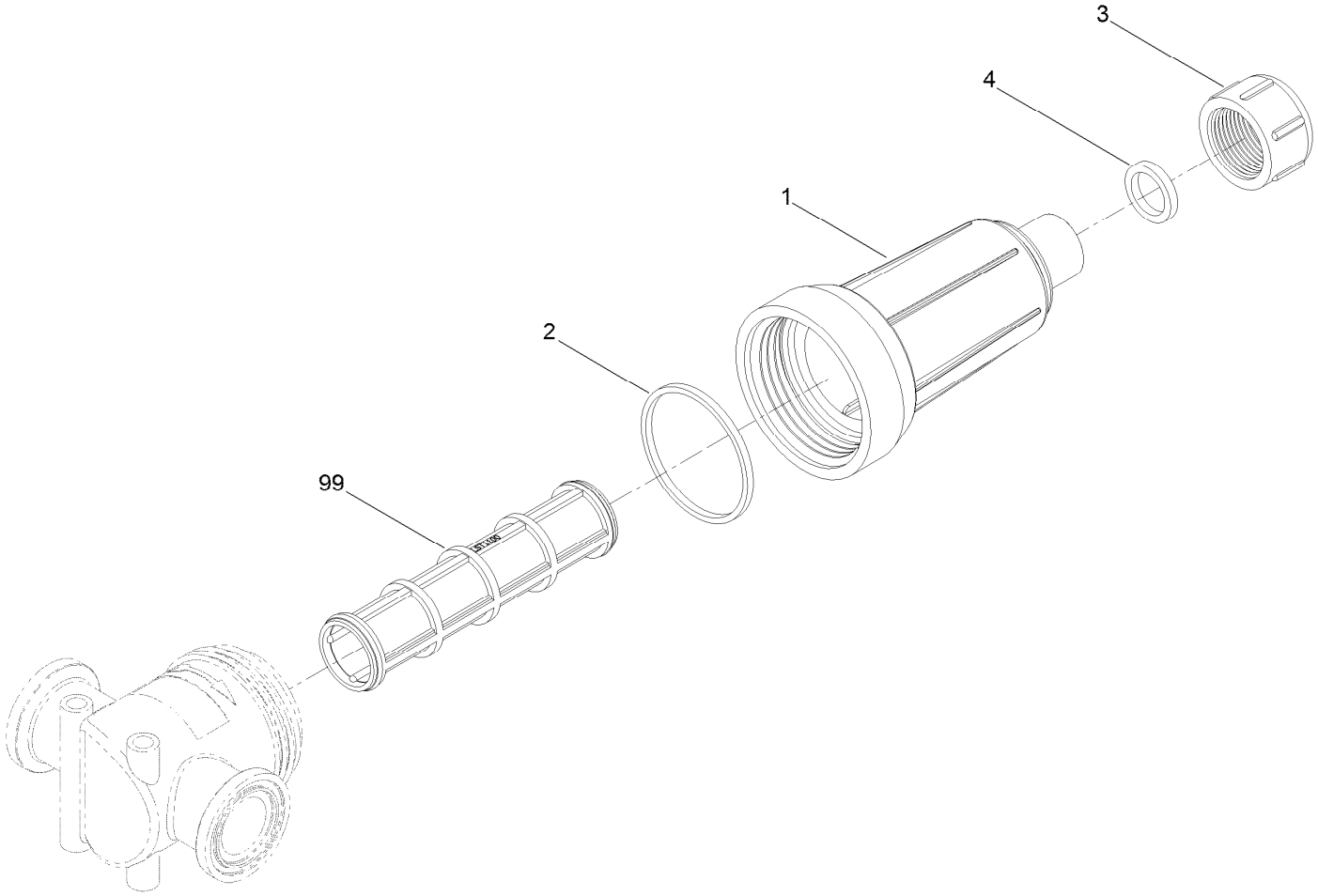


# Pressure Filter Assembly No. 131-3791

| *Ref.* | *Part Number* | *Qty.* | *Description* |
|---|---|---|---|
| 1 | 136-0397 | 1 | Bowl-Strainer |
| 2 | 136-0398 | 1 | Rubber-Gasket |
| 3 | 136-0410 | 1 | Strainer Cap |
| 4 | 136-0399 | 1 | Rubber-Gasket |
| 99 | 133-0384 | 1 | Screen-Teejet, 30 Mesh |
| 99 | 133-0385 | 1 | Screen-Teejet, 50 Mesh |
| 99 | 133-0386 | 1 | Screen-Teejet, 80 Mesh |
| 99 | 133-0387 | 1 | Screen-Teejet, 100 Mesh |

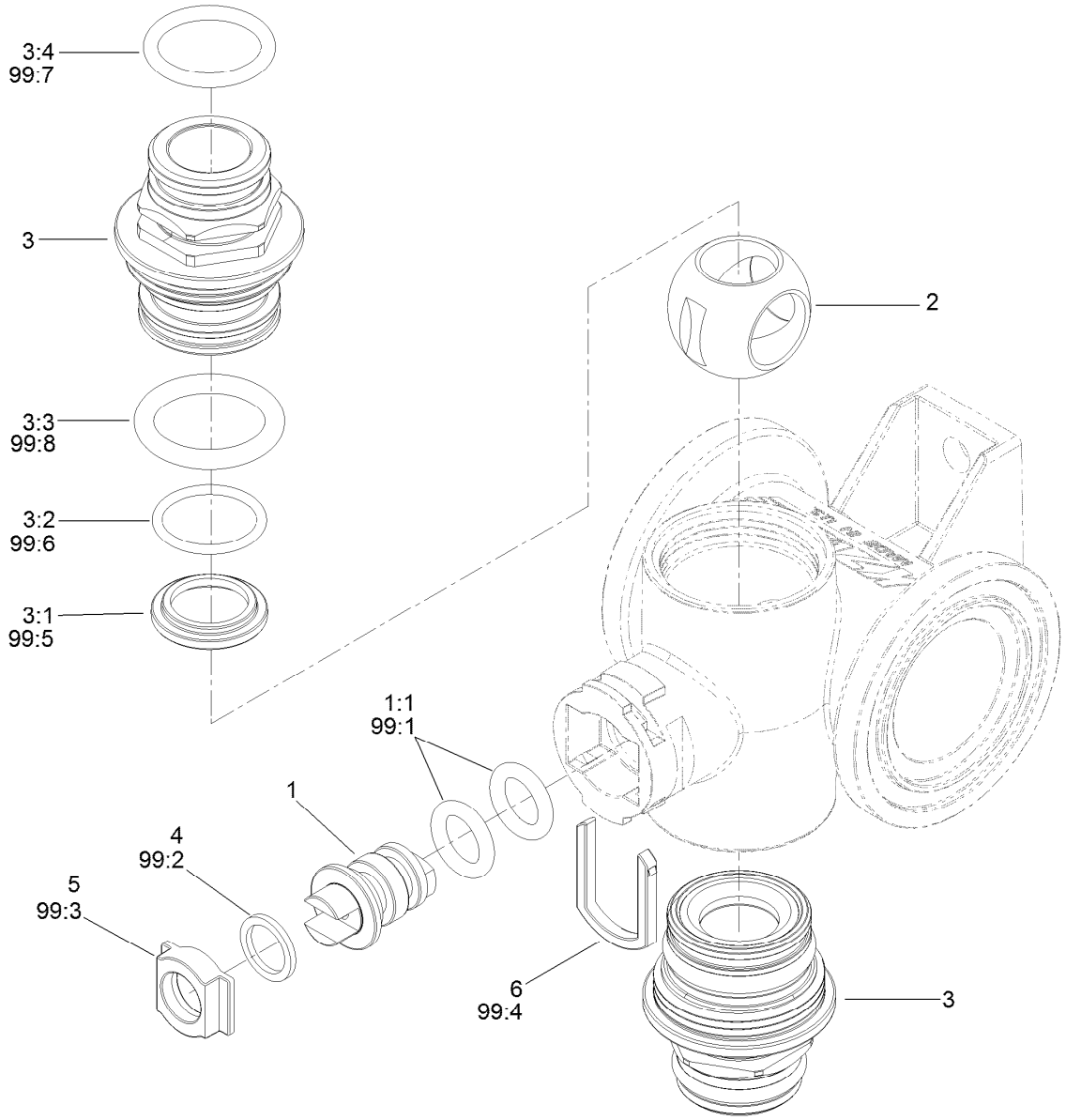


# On/Off Manifold Valve Kit No. 127-9803

| Ref. | Part Number | Qty. | Description |
|---|---|---|---|
| 1 | 130-8248 | 1 | Vavle Stem Kit |
| 1:1 | 127-1197 | 2 | O-Ring-Stem |
| 2 | 127-1194 | 1 | Ball-Valve, 3Way |
| 3 | 130-7317 | 2 | Endcap Kit |
| 3:1 | 127-1192 | 1 | Seat-Ball |
| 3:2 | 127-1188 | 1 | O-Ring, Seat (Ball) |
| 3:3 | 127-1189 | 1 | O-Ring, Endcap |
| 3:4 | 127-1187 | 1 | O-Ring, Endcap |
| 4 | 127-1196 | 1 | Washer-Stem, Valve |
| 5 | 127-1195 | 1 | Seat-Stem, Valve |

| Ref. | Part Number | Qty. | Description |
|---|---|---|---|
| 6 | 127-1190 | 1 | Fork-Stem, Valve |
| 99 | 130-7304 | 1 | Valve Repair Kit ● |
| 99:1 | 127-1197 | 2 | O-Ring-Stem |
| 99:2 | 127-1196 | 2 | Washer-Stem, Valve |
| 99:3 | 127-1195 | 1 | Seat-Stem, Valve |
| 99:4 | 127-1190 | 1 | Fork-Stem, Valve |
| 99:5 | 127-1192 | 2 | Seat-Ball |
| 99:6 | 127-1188 | 2 | O-Ring, Seat (Ball) |
| 99:7 | 127-1187 | 2 | O-Ring, Endcap |
| 99:8 | 127-1189 | 2 | O-Ring, Endcap |

● Not illustrated

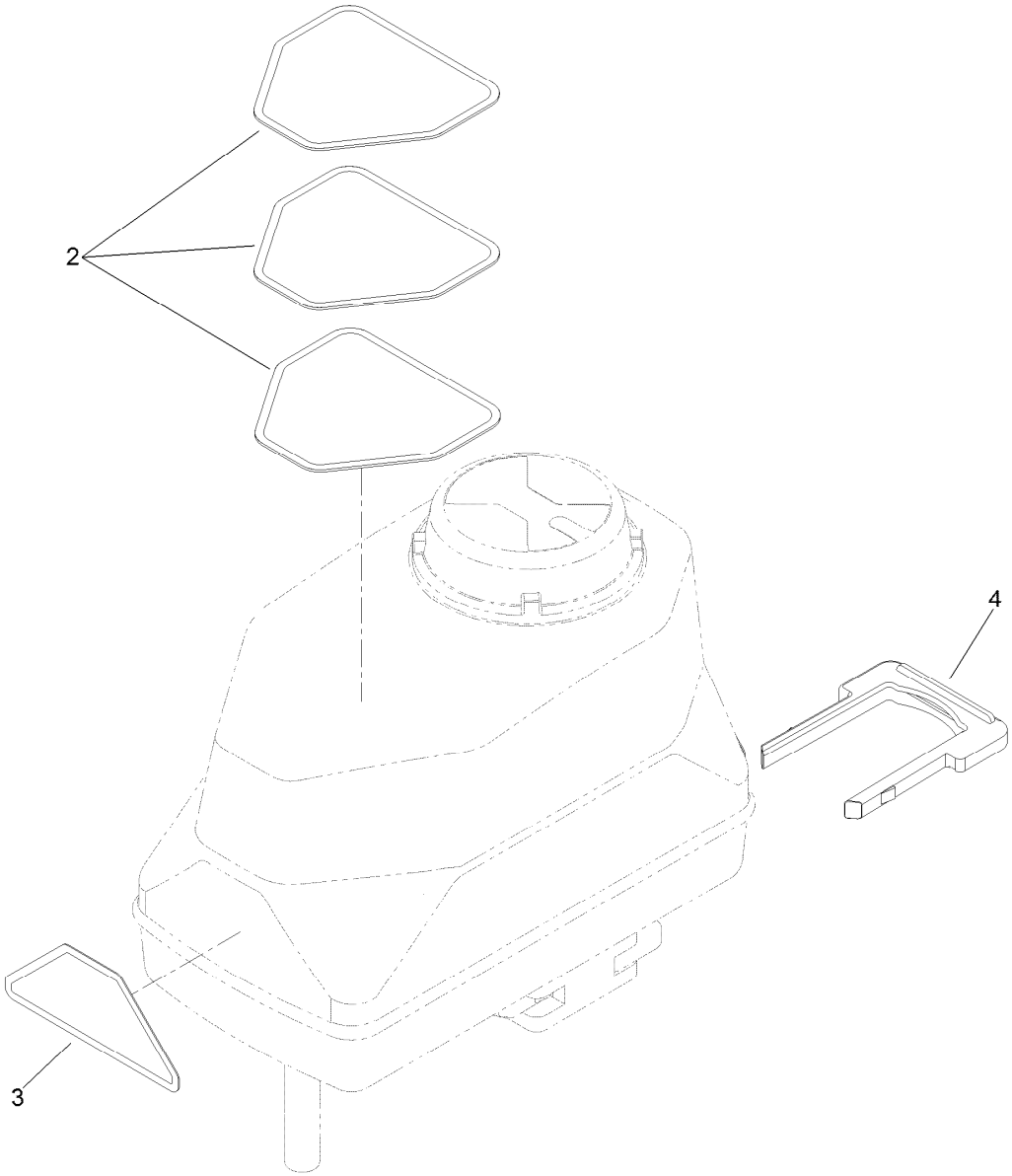


# On/Off Actuator Kit No. 131-3723

| Ref. | Part Number | Qty. | Description |
|---|---|---|---|
| 2 | 127-6979 | 1 | Decal-Valve, Agitation |
| 2 | 127-6981 | 1 | Decal-Valve, On/Off |
| 2 | 127-6982 | 1 | Decal-Valve, Master Boom |
| 3 | 127-6976 | 1 | Decal-Valve, Bypass Adjust |
| 4 | 130-7301 | 1 | Hairpin-Actuator |

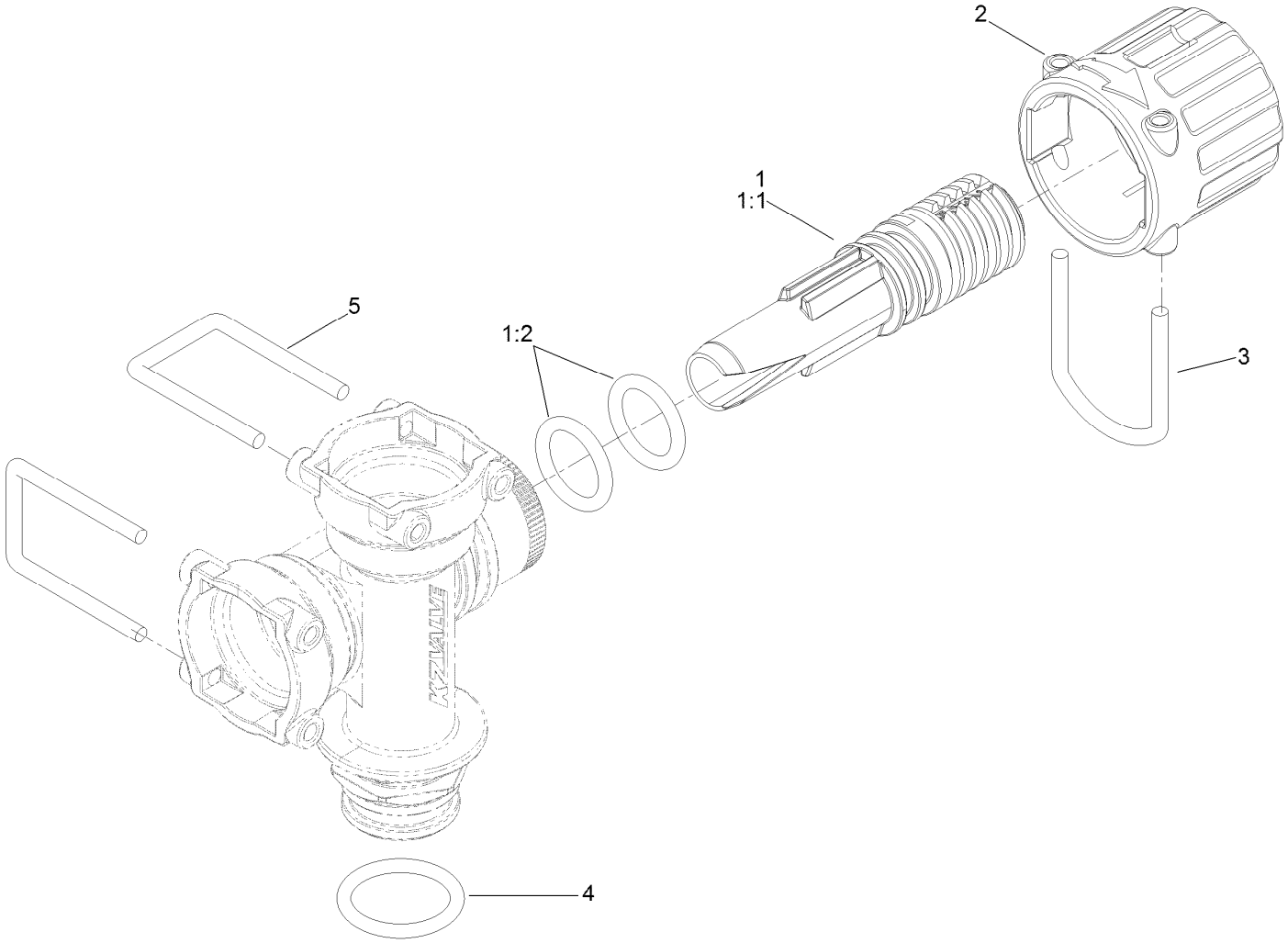


# Bypass Valve Assembly No. 127-9805

| *Ref.* | *Part Number* | *Qty.* | *Description* |
|---|---|---|---|
| 1 | 131-0298 | 1 | Bypass Needle Kit |
| 1:1 | 127-1182 | 1 | Needle-Bypass |
| 1:2 | 127-1181 | 2 | Oring-Bypass Needle |
| 2 | 127-1180 | 1 | Knob-Bypass |
| 3 | 127-1179 | 1 | Fork-Bypass Knob |
| 4 | 127-1187 | 1 | O-Ring, Endcap |
| 5 | 133-0398 | 2 | Pin-Fork |

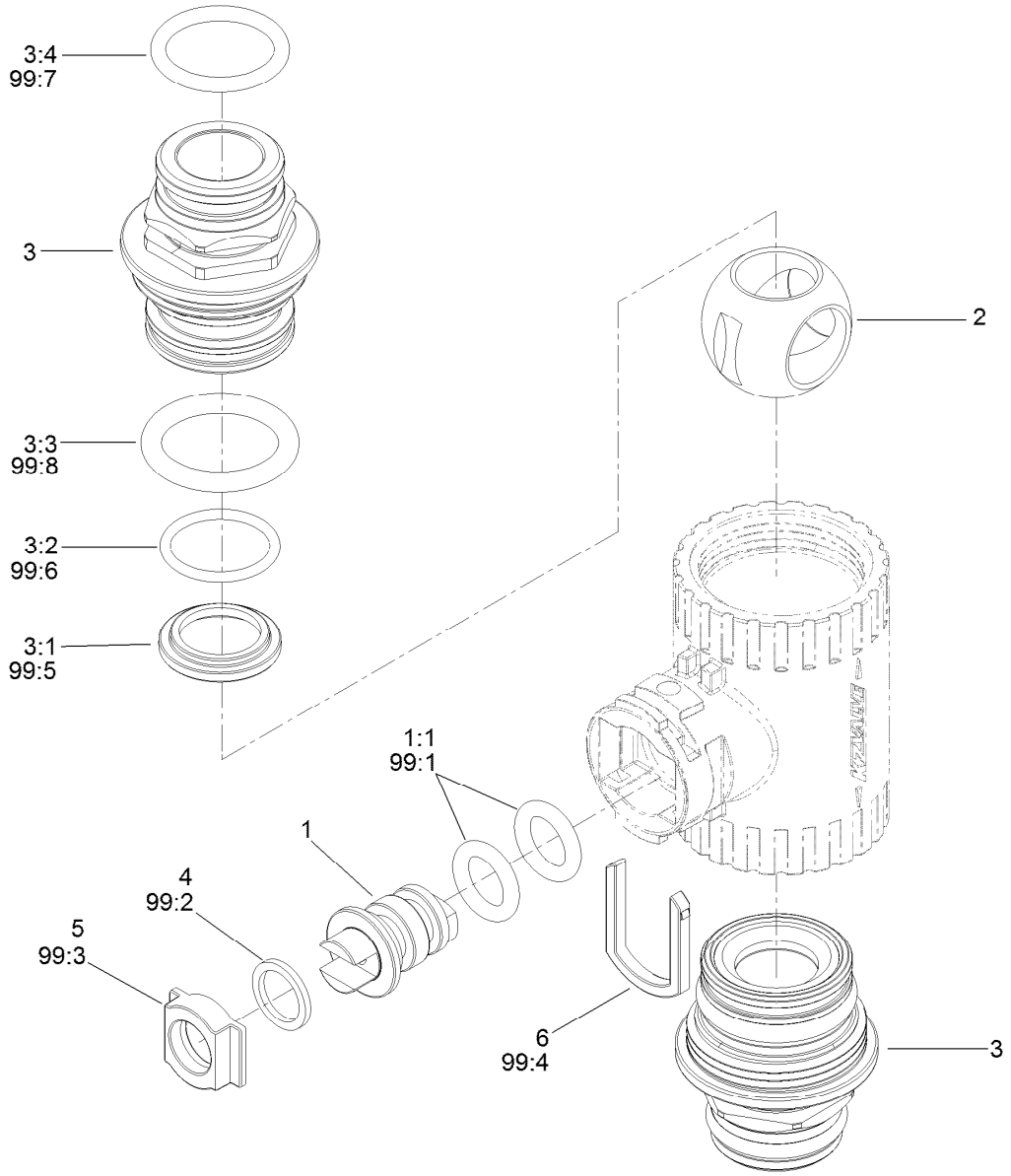


# On/Off 2-Way Valve Kit No. 131-0249

| Ref. | Part Number | Qty. | Description |
|---|---|---|---|
| 1 | 130-8248 | 1 | Vavle Stem Kit |
| 1:1 | 127-1197 | 2 | O-Ring-Stem |
| 2 | 131-0252 | 1 | Ball-2-Way |
| 3 | 130-7317 | 2 | Endcap Kit |
| 3:1 | 127-1192 | 1 | Seat-Ball |
| 3:2 | 127-1188 | 1 | O-Ring, Seat (Ball) |
| 3:3 | 127-1189 | 1 | O-Ring, Endcap |
| 3:4 | 127-1187 | 1 | O-Ring, Endcap |
| 4 | 127-1196 | 1 | Washer-Stem, Valve |
| 5 | 127-1195 | 1 | Seat-Stem, Valve |

| Ref. | Part Number | Qty. | Description |
|---|---|---|---|
| 6 | 127-1190 | 1 | Fork-Stem, Valve |
| 99 | 130-7304 | 1 | Valve Repair Kit ● |
| 99:1 | 127-1197 | 2 | O-Ring-Stem |
| 99:2 | 127-1196 | 2 | Washer-Stem, Valve |
| 99:3 | 127-1195 | 1 | Seat-Stem, Valve |
| 99:4 | 127-1190 | 1 | Fork-Stem, Valve |
| 99:5 | 127-1192 | 2 | Seat-Ball |
| 99:6 | 127-1188 | 2 | O-Ring, Seat (Ball) |
| 99:7 | 127-1187 | 2 | O-Ring, Endcap |
| 99:8 | 127-1189 | 2 | O-Ring, Endcap |

● Not illustrated

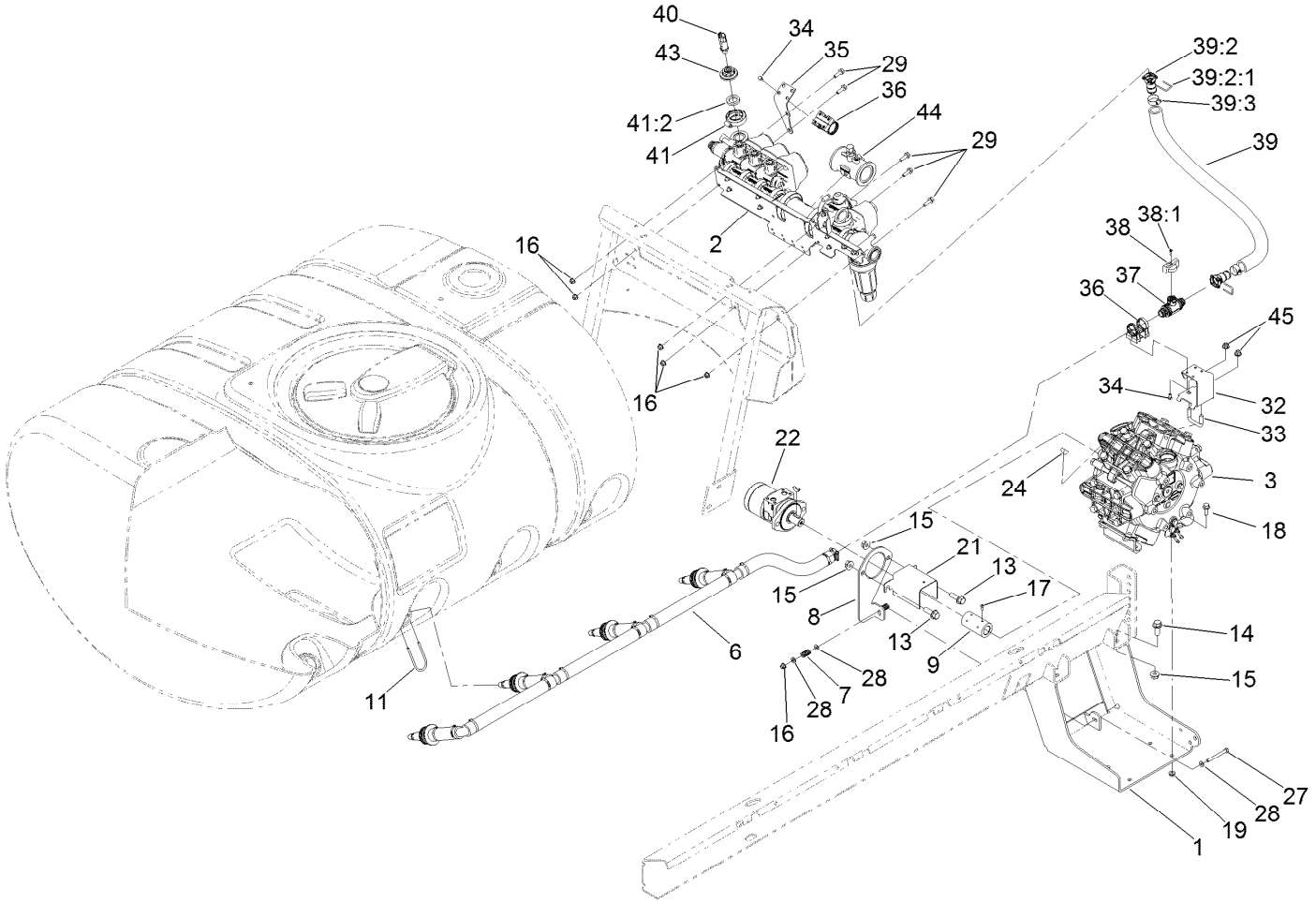


# Spray Pump and Valve Assembly

| Ref. | Part Number | Qty. | Description |
|---|---|---|---|
| 1 | 117-0655-03 | 1 | Bracket-Pump |
| 2 | | 1 | Spray Manifold ASM ▲ |
| 3 | 137-4230 | 1 | Pump ASM |
| 6 | 132-4309 | 1 | Agitation Hose ASM |
| 7 | 110-5331 | 2 | Spring-Compression |
| 8 | 117-8040-03 | 1 | Plate-Mount, Motor |
| 9 | 117-8045 | 1 | Coupler |
| 11 | 100-8635 | 4 | Fork |
| 13 | 100-6116 | 2 | Screw-HHF |
| 14 | 110-5057 | 4 | Capscrew-HHF |
| 15 | 108-3745 | 6 | Nut-HHF, Whiz |
| 16 | 104-8300 | 6 | Nut-HF, NI |
| 17 | 3241-7 | 4 | Screw-SQH |
| 18 | 3234-11 | 4 | Screw-HHF |
| 19 | 3290-357 | 4 | Nut-HHF, Whiz |
| 21 | 120-0628-03 | 1 | Guard-Shaft, Pump |
| 22 | 117-0706 | 1 | HYD Motor ASM |
| 24 | 106-1990 | 1 | Key-Woodruff |

| Ref. | Part Number | Qty. | Description |
|---|---|---|---|
| 27 | 322-14 | 1 | Screw-HH |
| 28 | 3256-23 | 5 | Washer-Plain |
| 29 | 3234-29 | 5 | Screw-HHF |
| 32 | 136-0376-03 | 1 | Bracket-Valve, Agitation |
| 33 | 107-3073 | 1 | U-Bolt |
| 34 | 33113-012 | 8 | Screw-HH |
| 35 | 136-2286-03 | 1 | Mount-Plate, Support |
| 36 | 132-4302 | 2 | Mount-Valve |
| 37 | 131-0249 | 1 | On/Off 2-Way Valve Kit |
| 38 | 131-0264 | 1 | Agitation Throttling Handle Kit |
| 38:1 | 131-0263 | 1 | Screw-Handle |
| 39 | 132-4310 | 1 | Agiation Supply Hose ASM |
| 39:2 | 127-9806 | 2 | Fitting Kit |
| 39:2:1 | 133-0398 | 1 | Pin-Fork |
| 39:3 | 2412-34 | 2 | Clamp-Hose |
| 40 | 130-8202 | 1 | Transducer-Pressure |
| 41 | 127-9829 | 1 | Clamp/Gasket Kit |

● Not illustrated
▲ Not serviced separately

■ Optional Equipment

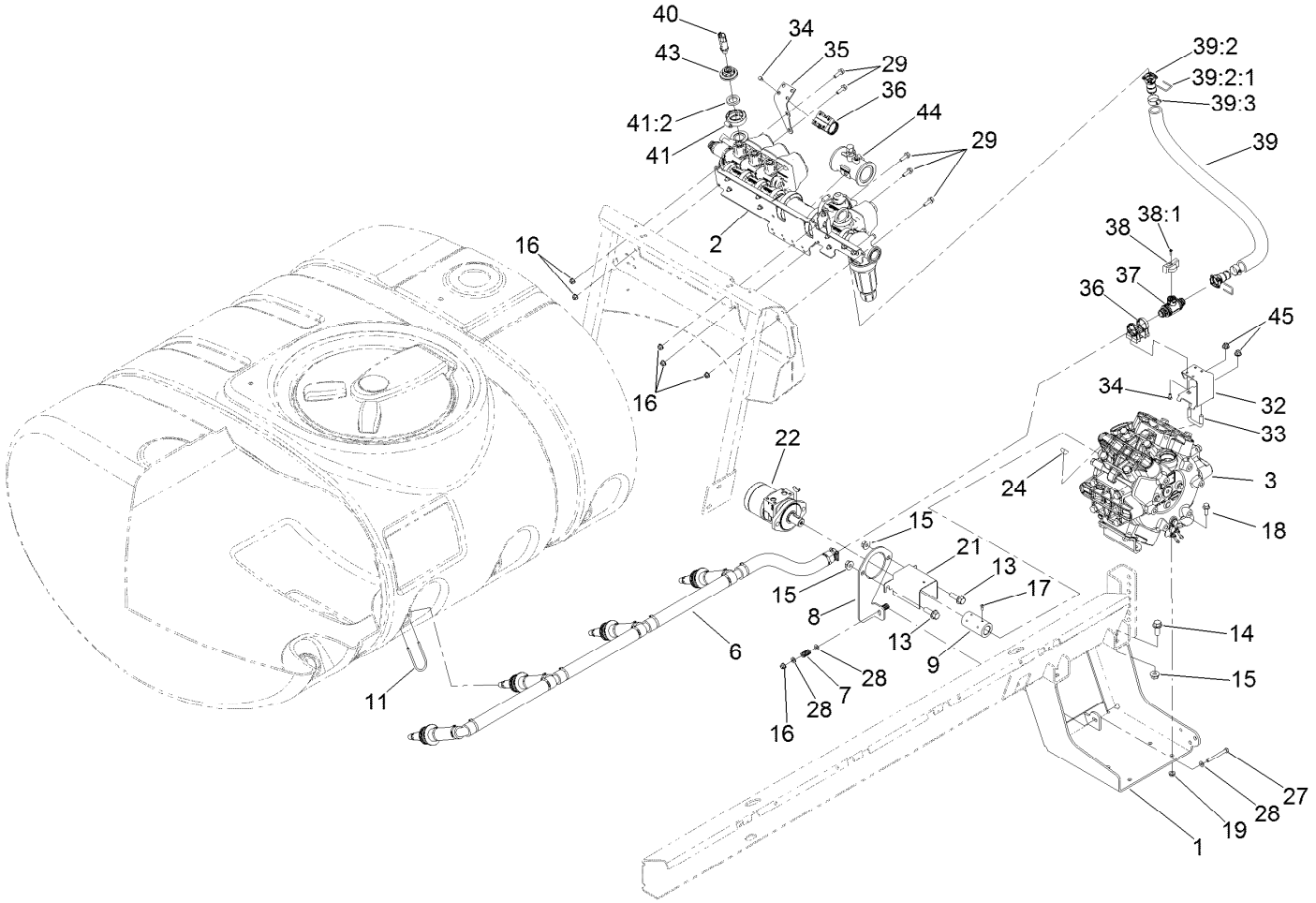


# Spray Pump and Valve Assembly (continued)

| Ref. | Part Number | Qty. | Description |
|---|---|---|---|
| 41:2 | 127-1145 | 1 | Gasket-Flange |
| 43 | 127-1185 | 1 | Fitting-Cap, Port |
| 44 | 106-1038 | 1 | Flow Meter ASM |

| Ref. | Part Number | Qty. | Description |
|---|---|---|---|
| 45 | 104-8301 | 2 | Nut-HF, NI |
| 99 | 133-0385 | 2 | Screen-Teejet, 50 Mesh ■● |

● Not illustrated
▲ Not serviced separately

■ Optional Equipment

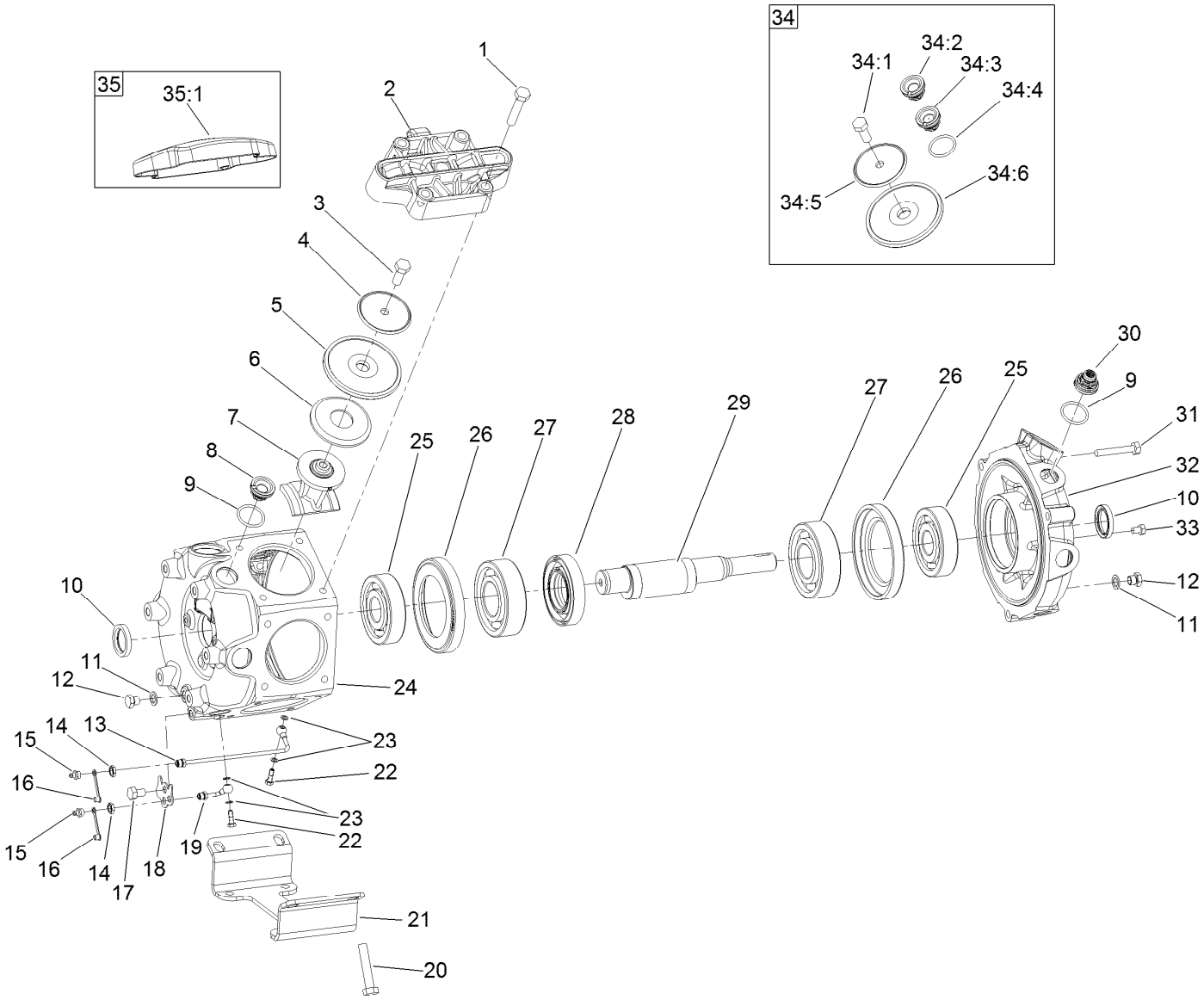


# Pump Assembly No. 137-4230

| Ref. | Part Number | Qty. | Description |
|---|---|---|---|
| 1 | 120-0773 | 20 | Bolt-Hex |
| 2 | 133-2824 | 6 | Cover-Pump, Hardened |
| 3 | 120-0777 | 6 | Bolt-Hex |
| 4 | 120-0778 | 6 | Disc-Diaphragm |
| 5 | 120-0779 | 6 | Diaphragm |
| 6 | 120-0780 | 6 | Disc-Backing, Diaphragm |
| 7 | 120-0781 | 6 | Rod-Connecting |
| 8 | 99-0861 | 10 | Valve-Pump |
| 9 | 100-6651 | 12 | O-Ring |
| 10 | 120-0783 | 2 | Seal-Oil |
| 11 | 120-0786 | 2 | Seal |
| 12 | 120-0785 | 2 | Plug |
| 13 | 133-2877 | 1 | Tube-Banjo, Long |
| 14 | 133-2878 | 2 | Nut |
| 15 | 133-2879 | 2 | Nipple-Grease |
| 16 | 133-2880 | 2 | Cap-Grease Nipple, Yellow |
| 17 | 136-2252 | 1 | Bolt-Hex |
| 18 | 133-2875 | 1 | Plate-Nipple, Grease |
| 19 | 133-2876 | 1 | Tube-Banjo, Short |
| 20 | 120-0774 | 4 | Bolt-Hex |
| 21 | 120-0787 | 1 | Foot-Pump |

| Ref. | Part Number | Qty. | Description |
|---|---|---|---|
| 22 | 133-2830 | 2 | Bolt-Banjo |
| 23 | 136-2251 | 4 | Gasket |
| 24 | 133-2821 | 1 | Housing-Pump, Main |
| 25 | 120-0788 | 2 | Bearing-Ball |
| 26 | 133-2820 | 2 | Spacer-Metal |
| 27 | 120-0791 | 2 | Bearing-Ball |
| 28 | 133-2827 | 1 | Distance Ring |
| 29 | 133-2825 | 1 | Shaft-Crank |
| 30 | 120-0793 | 2 | Valve W/Hole |
| 31 | 120-0794 | 3 | Bolt-Hex |
| 32 | 133-2822 | 1 | Housing-Pump, Front |
| 33 | 120-0784 | 4 | Bolt-Hex |
| 34 | 120-0796 | 1 | Pump Kit |
| 34:1 | 120-0777 | 6 | Bolt-Hex |
| 34:2 | 99-0861 | 10 | Valve-Pump |
| 34:3 | 120-0793 | 2 | Valve W/Hole |
| 34:4 | 100-6651 | 12 | O-Ring |
| 34:5 | 120-0778 | 6 | Disc-Diaphragm |
| 34:6 | 120-0779 | 6 | Diaphragm |
| 35 | 133-2898 | 1 | Pump Head Kit |
| 35:1 | 133-2824 | 6 | Cover-Pump, Hardened |

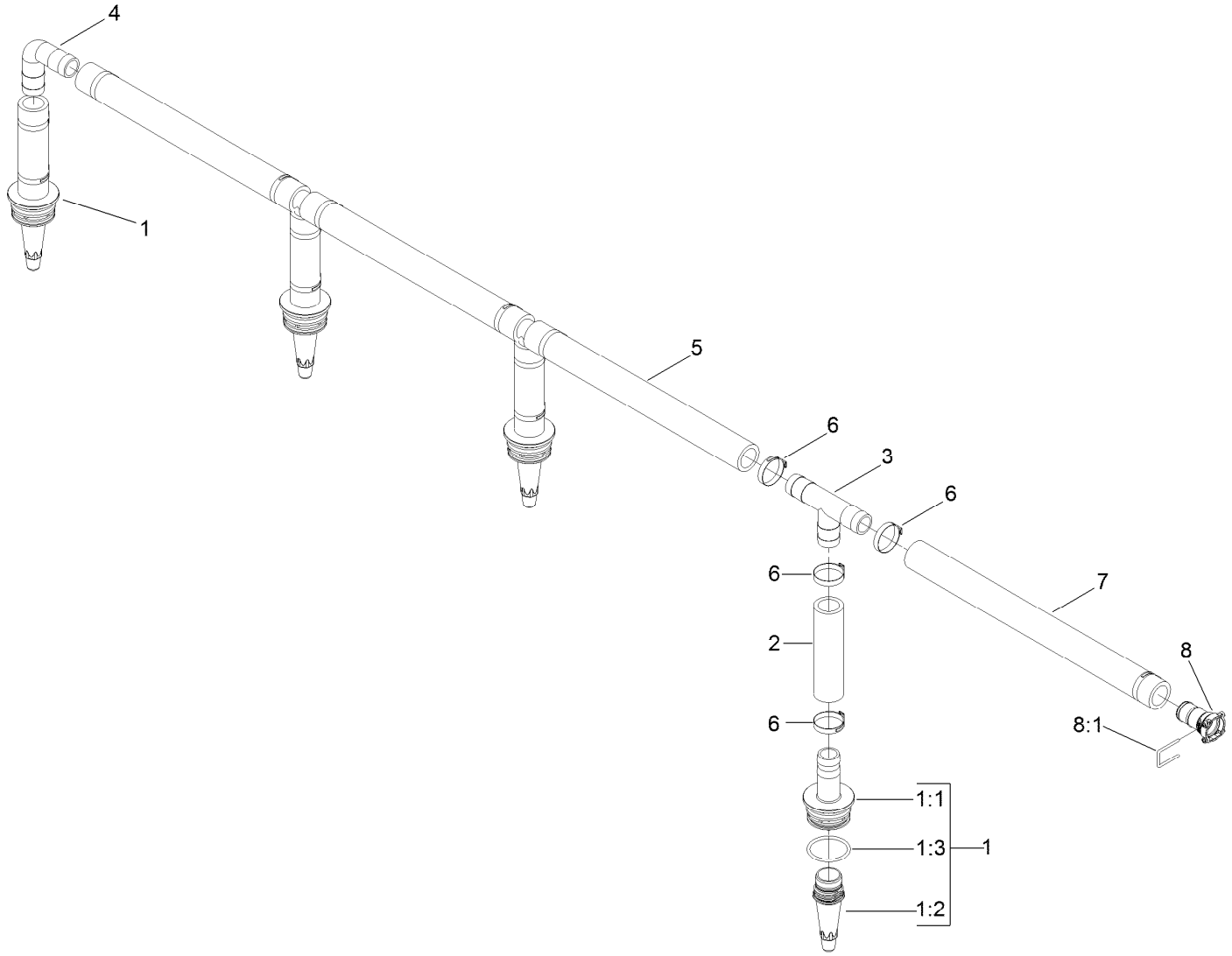


# Agitation Hose Assembly No. 132-4309

| *Ref.* | *Part Number* | *Qty.* | *Description* |
|---|---|---|---|
| 1 | 131-3731 | 4 | Agitation Nozzle ASM |
| 1:1 | 131-3732 | 1 | Fitting-Barb |
| 1:2 | 120-8579 | 1 | Nozzle-Agitation |
| 1:3 | 121-4996 | 1 | O-Ring |
| 2 | 119-0441 | 4 | Hose-Agitaiton |
| 3 | 117-7866 | 3 | Tee-Hosebarb |
| 4 | 117-7867 | 1 | Elbow-Hosebarb |
| 5 | 117-7862 | 3 | Hose-Main Agitation |
| 6 | 2412-3 | 16 | Clamp-Hose |
| 7 | 137-4181 | 1 | Hose-Agitation |
| 8 | 127-9806 | 1 | Fitting Kit |
| 8:1 | 133-0398 | 1 | Pin-Fork |

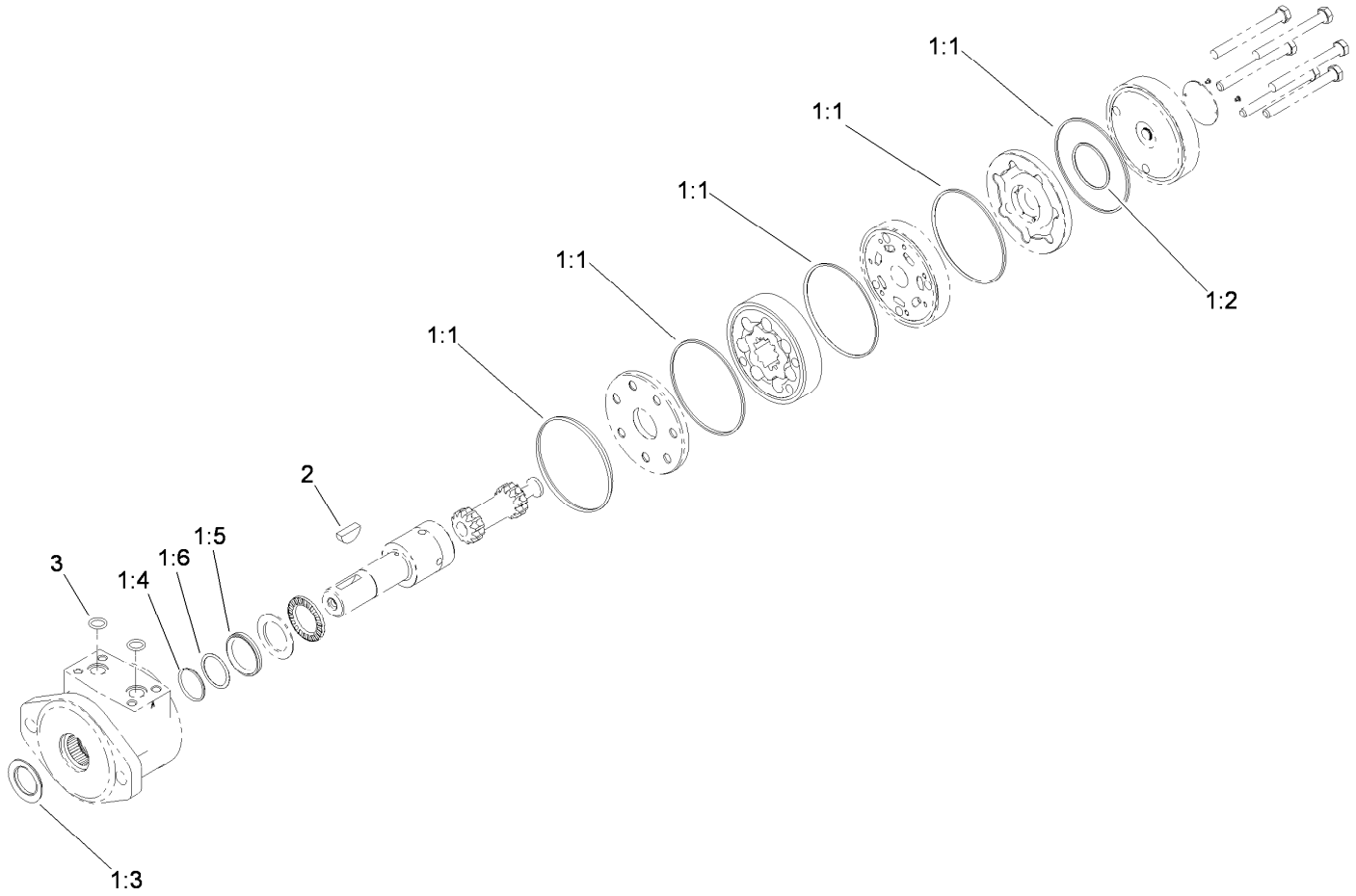


# Hydraulic Motor Assembly No. 117-0706

| *Ref.* | *Part Number* | *Qty.* | *Description* |
|---|---|---|---|
| 1 | 119-0433 | 1 | Wheel Motor Seal Kit ● |
| 1:1 | | 5 | Seal-Ring ■ |
| 1:2 | | 1 | Seal-Commutator ■ |
| 1:3 | | 1 | Seal-Dirt And Water ■ |
| 1:4 | | 1 | Ring-Backing ■ |
| 1:5 | | 1 | Seal-Shaft ■ |
| 1:6 | | 1 | Washer-Backup ■ |
| 2 | 3257-8 | 1 | Key-Woodruff |
| 3 | 120-0691 | 2 | O-Ring |

● Not illustrated

■ Not serviced separately

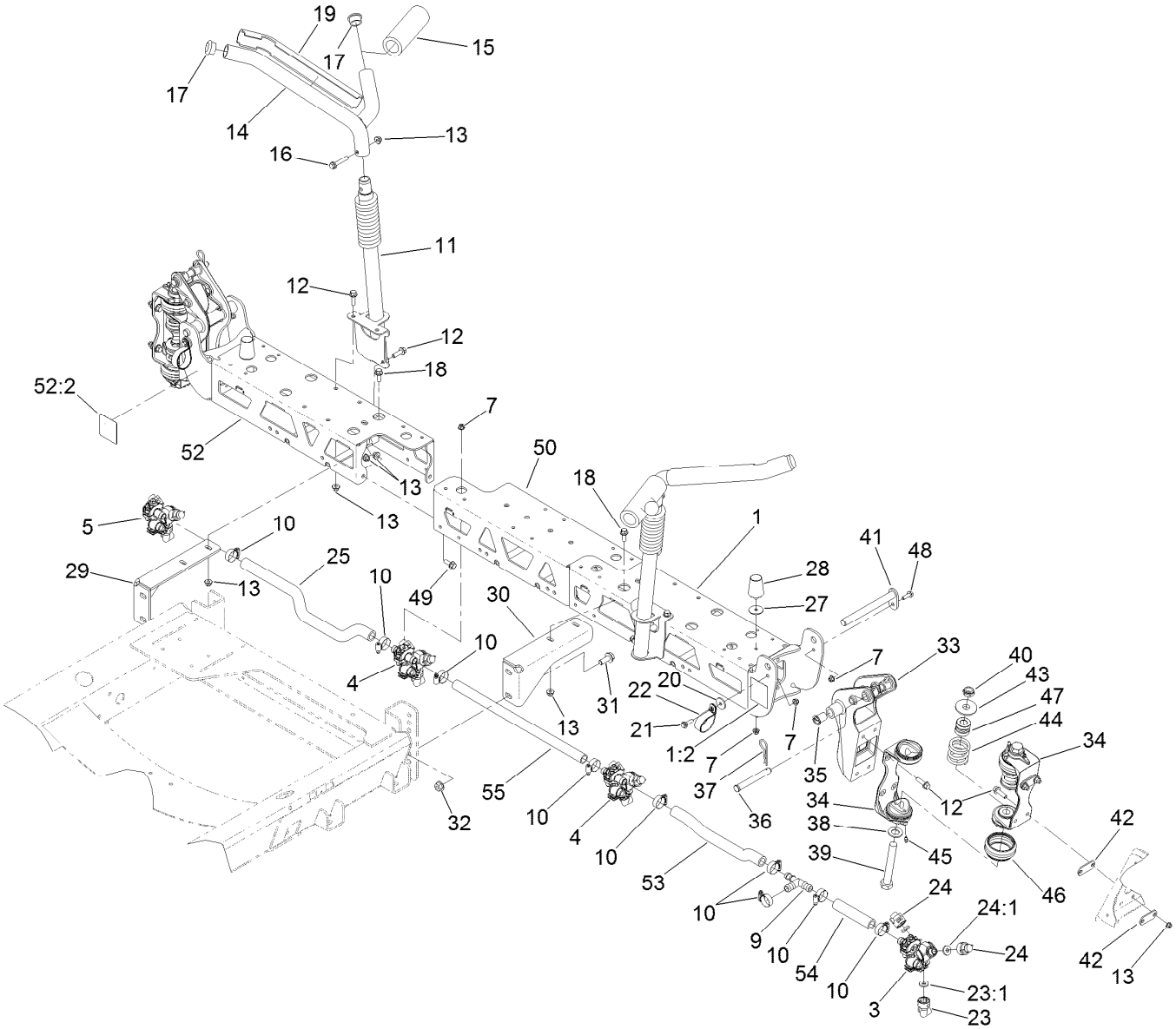


# Center Boom Assembly

| Ref. | Part Number | Qty. | Description |
|---|---|---|---|
| 1 | 136-0381 | 1 | Boom-LH |
| 1:2 | 120-0617 | 2 | Decal-Warning, Pinch, Crush |
| 3 | 108-3725 | 1 | LH Single Body Turret ASM |
| 4 | 108-3727 | 2 | Double Turret Body ASM |
| 5 | 108-3726 | 1 | RH Single Body Turret ASM |
| 7 | 104-8300 | 10 | Nut-HF, NI |
| 9 | 108-3439 | 1 | Tee |
| 10 | 2412-129 | 9 | Clamp-Hose |
| 11 | 130-8238-03 | 2 | Lower Cradle ASM |
| 12 | 110-5050 | 22 | Screw-HHF |
| 13 | 104-8301 | 32 | Nut-HF, NI |
| 14 | 108-3476-03 | 2 | Cradle-Upper |
| 15 | 108-3457 | 2 | Spacer |
| 16 | 108-3742 | 2 | Screw-HHF |
| 17 | 108-3489 | 4 | Cap-Tube |
| 18 | 110-5052 | 4 | Screw-HHF |
| 19 | 108-3495 | 2 | Cover-Slide |
| 20 | 108-3743 | 2 | Washer |
| 21 | 108-3744 | 2 | Screw-Shoulder |
| 22 | 114-9566 | 2 | Clamp-R |

| Ref. | Part Number | Qty. | Description |
|---|---|---|---|
| 23 | 95-9186 | 4 | Cap |
| 23:1 | 40998 | 1 | Seat-Gasket |
| 24 | 95-9187 | 8 | Cap-Blank |
| 24:1 | 40998 | 1 | Seat-Gasket |
| 25 | 108-3735 | 1 | Hose-Boom, Center (LH) |
| 27 | 3256-68 | 2 | Washer-Flat |
| 28 | 110-5070 | 2 | Bumper |
| 29 | 127-8955-03 | 1 | Mount-Boom |
| 30 | 127-8956-03 | 1 | Mount-Boom |
| 31 | 110-5057 | 4 | Capscrew-HHF |
| 32 | 108-3745 | 4 | Nut-HHF, Whiz |
| 33 | 119-4993-03 | 2 | Bracket-Pivot |
| 34 | 108-3471-03 | 4 | Hinge |
| 35 | 100-8541 | 4 | Bushing-A Arm |
| 36 | 108-3436 | 2 | Pin-Clevis |
| 37 | 3290-468 | 2 | Pin-Cotter |
| 38 | 110-5054 | 4 | Washer-Flat |
| 39 | 108-3738 | 4 | Screw-HH |
| 40 | 3296-15 | 4 | Nut-Lock, NI |
| 41 | 108-3419 | 2 | Pivot Pin ASM |
| 42 | 108-3605 | 8 | Plate-Backing |

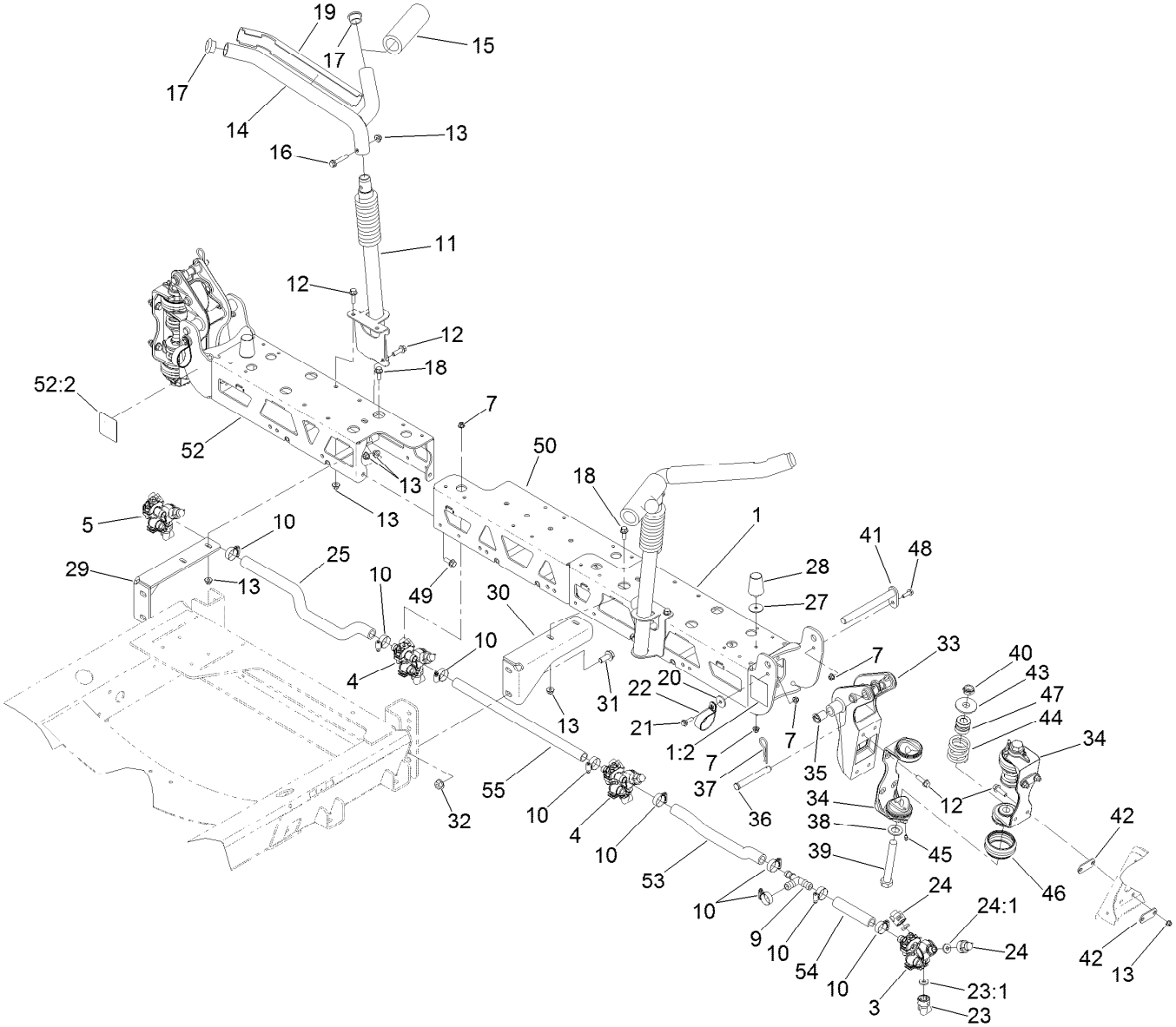


# Center Boom Assembly (continued)

| Ref. | Part Number | Qty. | Description |
|---|---|---|---|
| 43 | 108-3444 | 4 | Retainer-Spring |
| 44 | 108-3440 | 4 | Spring-Breakaway, Boom |
| 45 | 302-5 | 8 | Fitting-Grease |
| 46 | 108-3459 | 4 | Boot-Hinge |
| 47 | 120-8541 | 4 | Dampener-Hinge |
| 48 | 108-3748 | 2 | Screw-HHF |
| 49 | 3234-42 | 4 | Screw-HHF |

| Ref. | Part Number | Qty. | Description |
|---|---|---|---|
| 50 | 133-0412-03 | 1 | Center-Center, Boom |
| 52 | 136-0382 | 1 | Boom-RH |
| 52:2 | 120-0617 | 2 | Decal-Warning, Pinch, Crush |
| 53 | 136-0438 | 1 | Hose-Formed |
| 54 | 108-3728 | 1 | Hose-Boom |
| 55 | 40506 | 1 | Hose-Jumper |

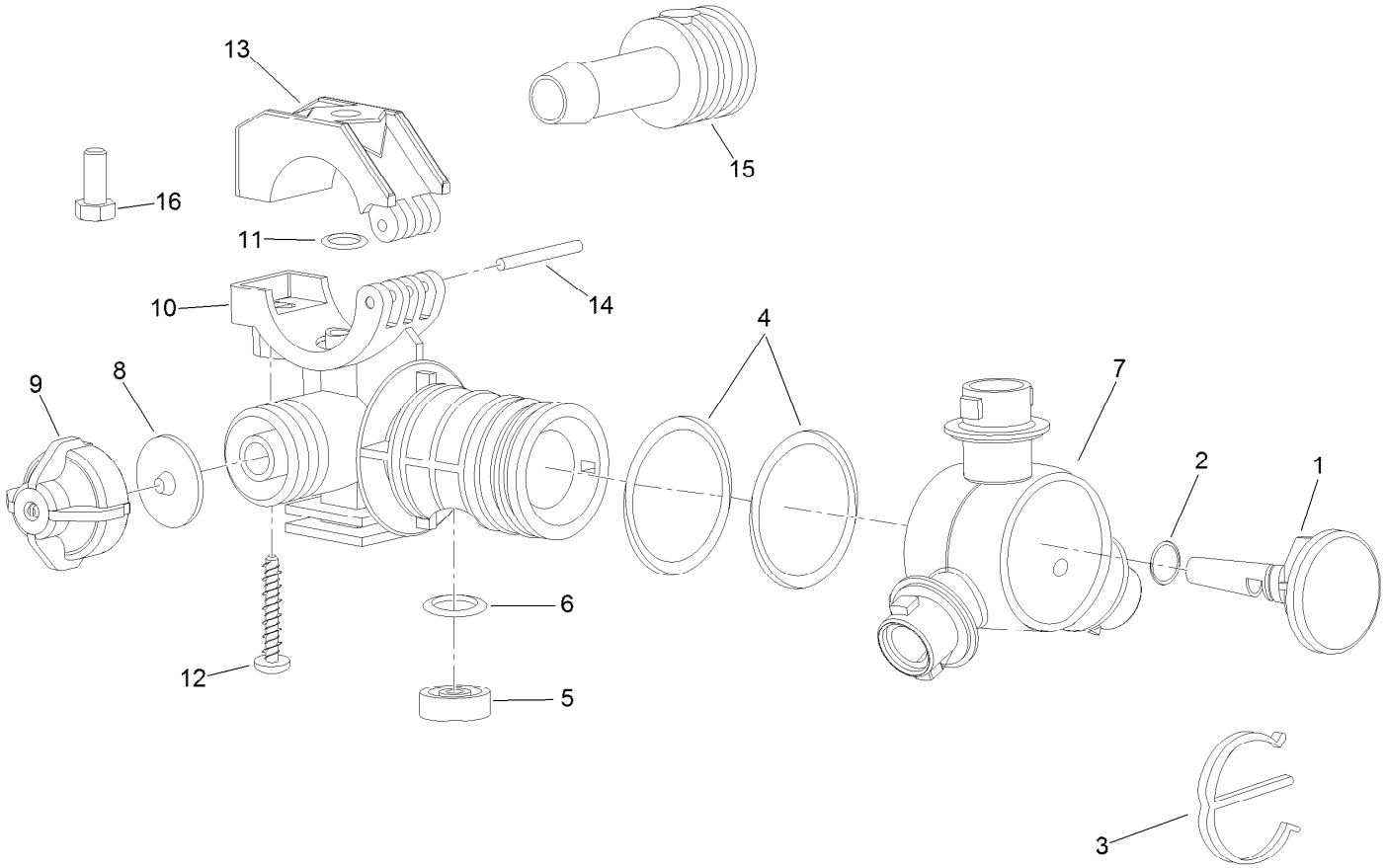


# RH Single Body Turret Assembly No. 108-3726

| Ref. | Part Number | Qty. | Description |
|---|---|---|---|
| 1 | 95-9200 | 1 | Plug |
| 2 | 95-9198 | 1 | O-Ring |
| 3 | 95-9197 | 1 | E-Clip |
| 4 | 95-9199 | 2 | O-Ring |
| 5 | 108-3264 | 1 | Seal-Viton |
| 6 | 108-3265 | 1 | O-Ring-Viton |
| 7 | 95-9196 | 1 | Turret |
| 8 | 41003 | 1 | Diaphragm |

| Ref. | Part Number | Qty. | Description |
|---|---|---|---|
| 9 | 95-9193 | 1 | Cap-Diaphram |
| 10 | 95-9192 | 1 | Body-Split Eyelet |
| 11 | 95-9191 | 1 | O-Ring |
| 12 | 99-0811 | 1 | Screw-Clamp |
| 13 | 99-0812 | 1 | Clamp-Upper |
| 14 | 99-0814 | 1 | Pin-Pivot |
| 15 | 95-9201 | 1 | Shank-Hose |
| 16 | 322-3 | 1 | Screw-HH |

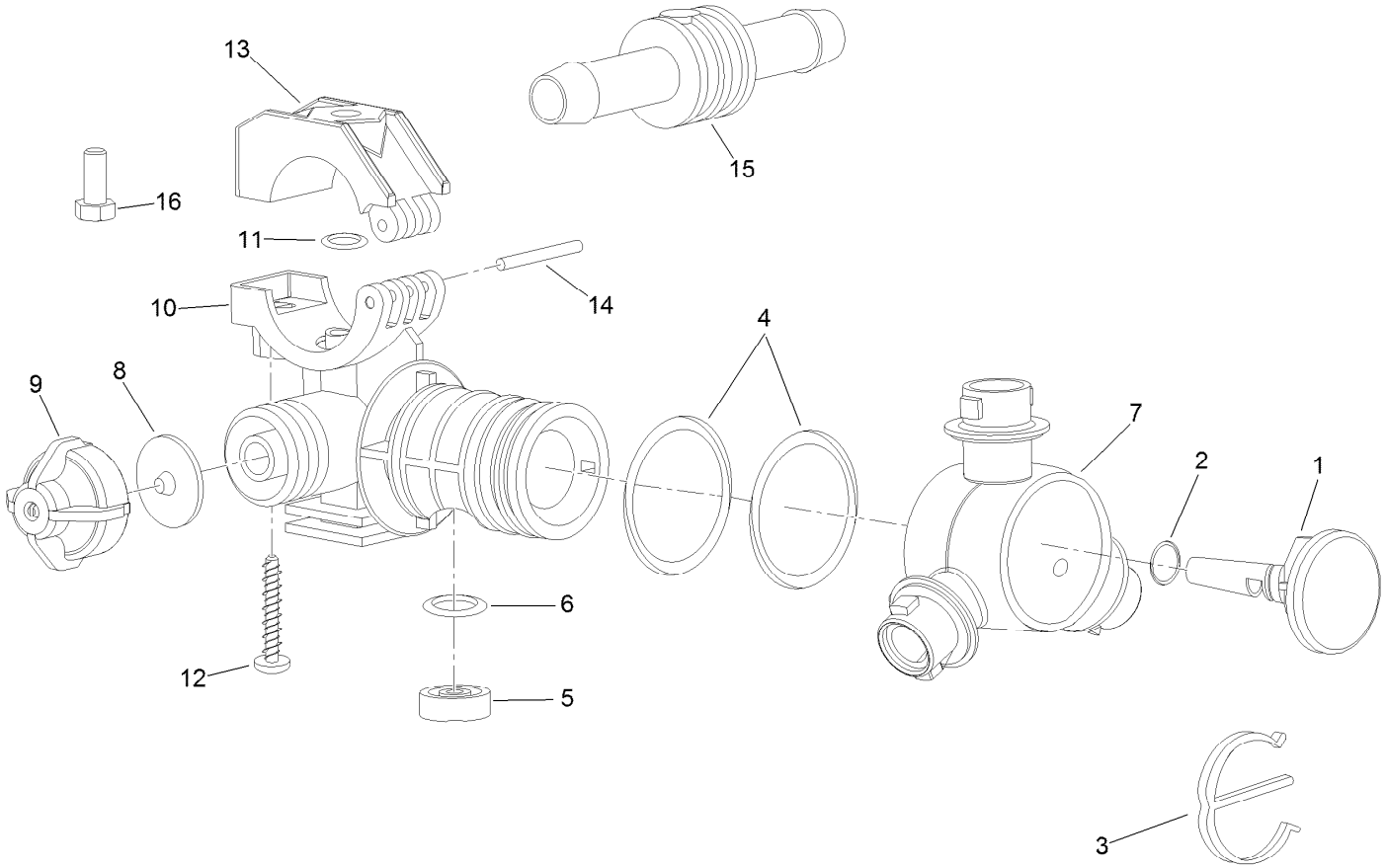


# Double Turret Body Assembly No. 108-3727

| Ref. | Part Number | Qty. | Description |
|---|---|---|---|
| 1 | 95-9200 | 1 | Plug |
| 2 | 95-9198 | 1 | O-Ring |
| 3 | 95-9197 | 1 | E-Clip |
| 4 | 95-9199 | 2 | O-Ring |
| 5 | 108-3264 | 1 | Seal-Viton |
| 6 | 108-3265 | 1 | O-Ring-Viton |
| 7 | 95-9196 | 1 | Turret |
| 8 | 41003 | 1 | Diaphragm |

| Ref. | Part Number | Qty. | Description |
|---|---|---|---|
| 9 | 95-9193 | 1 | Cap-Diaphram |
| 10 | 95-9192 | 1 | Body-Split Eyelet |
| 11 | 95-9191 | 1 | O-Ring |
| 12 | 99-0811 | 1 | Screw-Clamp |
| 13 | 99-0812 | 1 | Clamp-Upper |
| 14 | 99-0814 | 1 | Pin-Pivot |
| 15 | 95-9202 | 1 | Shank-Hose |
| 16 | 322-3 | 1 | Screw-HH |

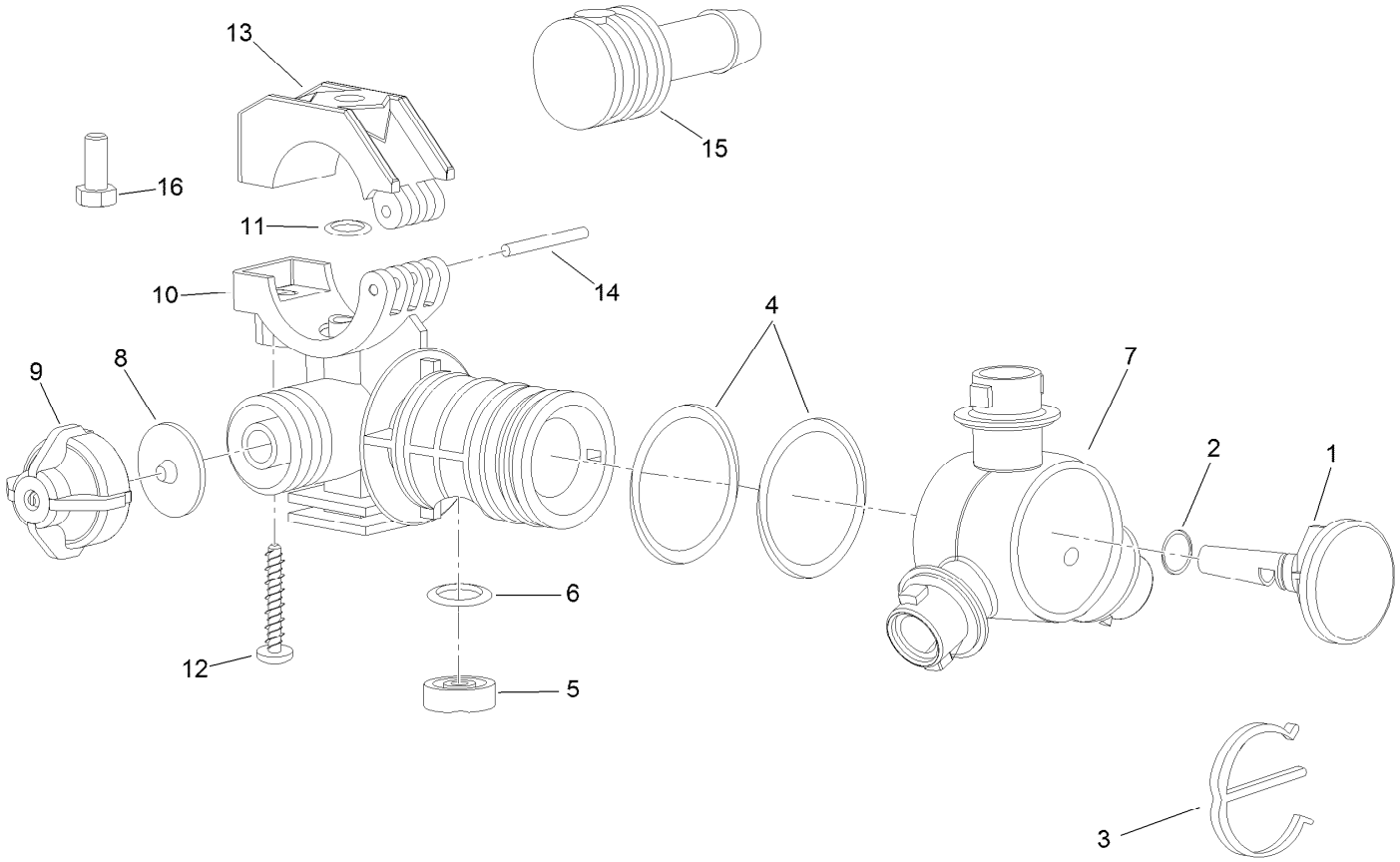


# LH Single Turret Body Assembly No. 108-3725

| Ref. | Part Number | Qty. | Description |
|---|---|---|---|
| 1 | 95-9200 | 1 | Plug |
| 2 | 95-9198 | 1 | O-Ring |
| 3 | 95-9197 | 1 | E-Clip |
| 4 | 95-9199 | 2 | O-Ring |
| 5 | 108-3264 | 1 | Seal-Viton |
| 6 | 108-3265 | 1 | O-Ring-Viton |
| 7 | 95-9196 | 1 | Turret |
| 8 | 41003 | 1 | Diaphragm |

| Ref. | Part Number | Qty. | Description |
|---|---|---|---|
| 9 | 95-9193 | 1 | Cap-Diaphram |
| 10 | 95-9192 | 1 | Body-Split Eyelet |
| 11 | 95-9191 | 1 | O-Ring |
| 12 | 99-0811 | 1 | Screw-Clamp |
| 13 | 99-0812 | 1 | Clamp-Upper |
| 14 | 99-0814 | 1 | Pin-Pivot |
| 15 | 95-9201 | 1 | Shank-Hose |
| 16 | 322-3 | 1 | Screw-HH |

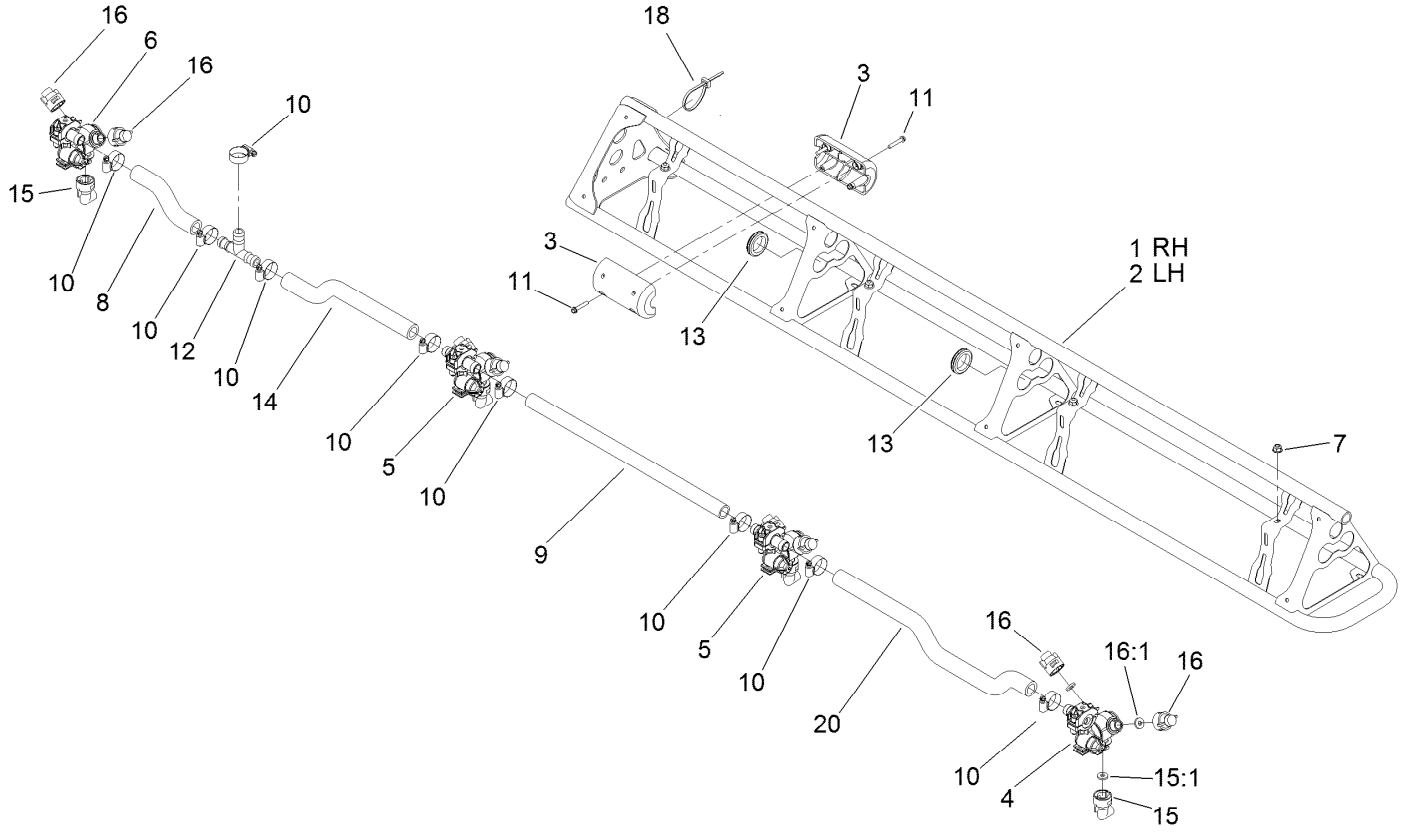


# Left and Right Hand Boom Assembly

| Ref. | Part Number | Qty. | Description |
|---|---|---|---|
| 1 | 108-3524-03 | 1 | Boom-RH |
| 2 | 108-3525-03 | 1 | Boom-LH |
| 3 | 119-9368 | 4 | Block Slide |
| 4 | 108-3725 | 2 | LH Single Body Turret ASM |
| 5 | 108-3727 | 4 | Double Turret Body ASM |
| 6 | 108-3726 | 2 | RH Single Body Turret ASM |
| 7 | 104-8300 | 8 | Nut-HF, NI |
| 8 | 136-0437 | 2 | Hose-Formed |
| 9 | 40506 | 2 | Hose-Jumper |
| 10 | 2412-129 | 18 | Clamp-Hose |

| Ref. | Part Number | Qty. | Description |
|---|---|---|---|
| 11 | 119-9369 | 8 | Screw-HHF |
| 12 | 108-3439 | 2 | Tee |
| 13 | 240-3 | 4 | Grommet-Rubber |
| 14 | 136-0436 | 2 | Hose-Formed |
| 15 | 95-9186 | 8 | Cap |
| 15:1 | 40998 | 1 | Seat-Gasket |
| 16 | 95-9187 | 16 | Cap-Blank |
| 16:1 | 40998 | 1 | Seat-Gasket |
| 18 | 3290-378 | 2 | Tie-Cable |
| 20 | 108-3735 | 2 | Hose-Boom, Center (LH) |

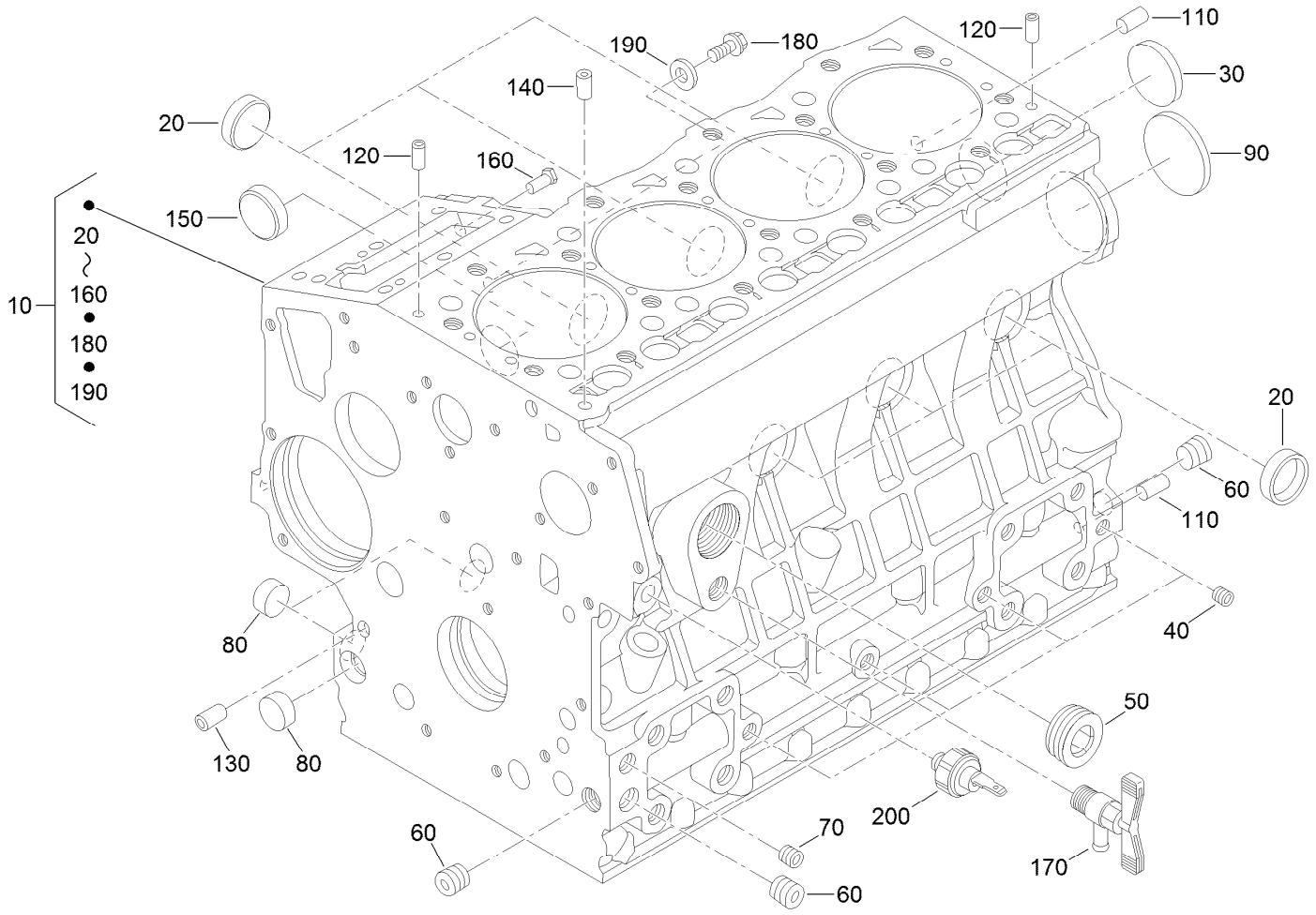


# Crankcase Assembly

| Ref. | Part Number | Qty. | Description |
|---|---|---|---|
| 10 | 127-0451 | 1 | Crankcase ASM |
| 20 | 98-9398 | 6 | Cap-Sealing |
| 30 | 98-7539 | 1 | Cap-Sealing |
| 40 | 98-9687 | 4 | Plug |
| 50 | 105-3779 | 1 | Plug |
| 60 | 98-9597 | 3 | Plug |
| 70 | 98-7487 | 2 | Plug |
| 80 | 98-9379 | 3 | Plug-Expansion |
| 90 | 98-9668 | 1 | Plug-Expansion |
| 110 | 98-9377 | 2 | Pin-Straight |

| Ref. | Part Number | Qty. | Description |
|---|---|---|---|
| 120 | 98-9376 | 2 | Pin-Straight |
| 130 | 98-9387 | 2 | Pin-Pipe |
| 140 | 98-9539 | 1 | Pin-Pipe |
| 150 | 98-9599 | 1 | Plug |
| 160 | 105-3796 | 1 | Pin-Spring, Start |
| 170 | 120-3121 | 1 | Draincock ASM |
| 180 | 99-8363 | 1 | Bolt-Flange |
| 190 | 98-7654 | 1 | Gasket |
| 200 | 98-9416 | 1 | Switch-Oil |

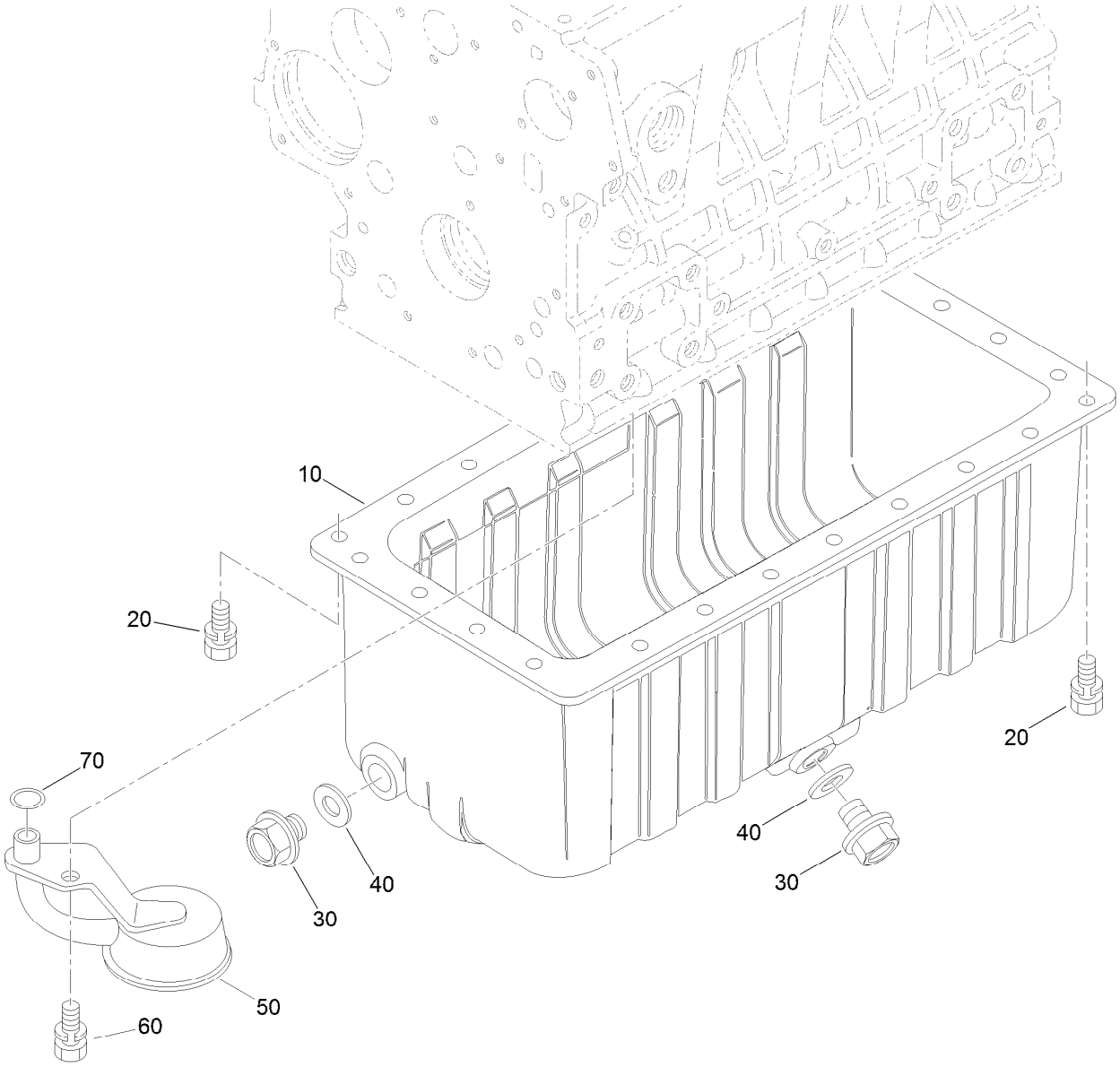


# Oil Pan Assembly

| *Ref.* | *Part Number* | *Qty.* | *Description* |
|---|---|---|---|
| 10 | 108-2852 | 1 | Oil Pan ASM |
| 20 | 98-9351 | 26 | Bolt |
| 30 | 114-8151 | 2 | Plug-Drain |
| 40 | 98-7524 | 2 | Gasket |
| 50 | 112-7003 | 1 | Head-Filter, Oil |
| 60 | 98-7526 | 1 | Bolt |
| 70 | 105-3776 | 1 | O-Ring |

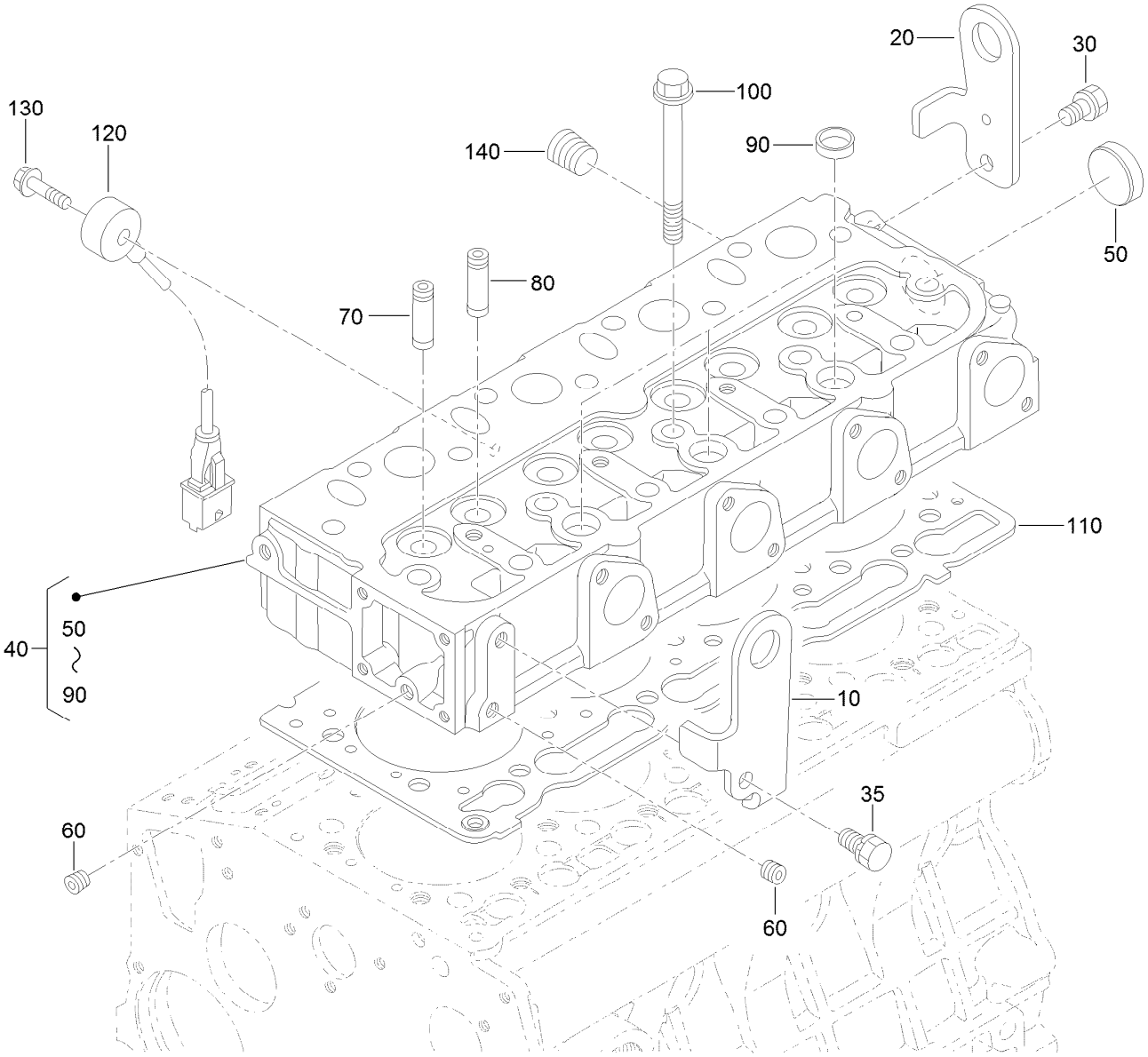


# Cylinder Head Assembly

| Ref. | Part Number | Qty. | Description |
|---|---|---|---|
| 10 | 127-0463 | 1 | Hook-Engine |
| 20 | 127-0464 | 1 | Hook-Engine |
| 30 | 100-9195 | 1 | Bolt |
| 35 | 98-7526 | 1 | Bolt |
| 40 | 127-0452 | 1 | Cylinder Head ASM |
| 50 | 105-3705 | 1 | Cap-Sealing |
| 60 | 98-9687 | 2 | Plug |
| 70 | 107-9066 | 4 | Guide-Valve, Inlet |
| 80 | 127-0478 | 4 | Guide-Valve, Exhaust |
| 90 | 98-9389 | 3 | Cap-Sealing |
| 100 | 98-9479 | 9 | Bolt-Head, Cylinder |
| 110 | 127-0434 | 1 | Gasket-Head, Cylinder |
| 120 | 127-0467 | 1 | Sensor-Knock |
| 130 | 127-0506 | 1 | Bolt-Sensor, Knock |
| 140 | 98-9444 | 1 | Plug |

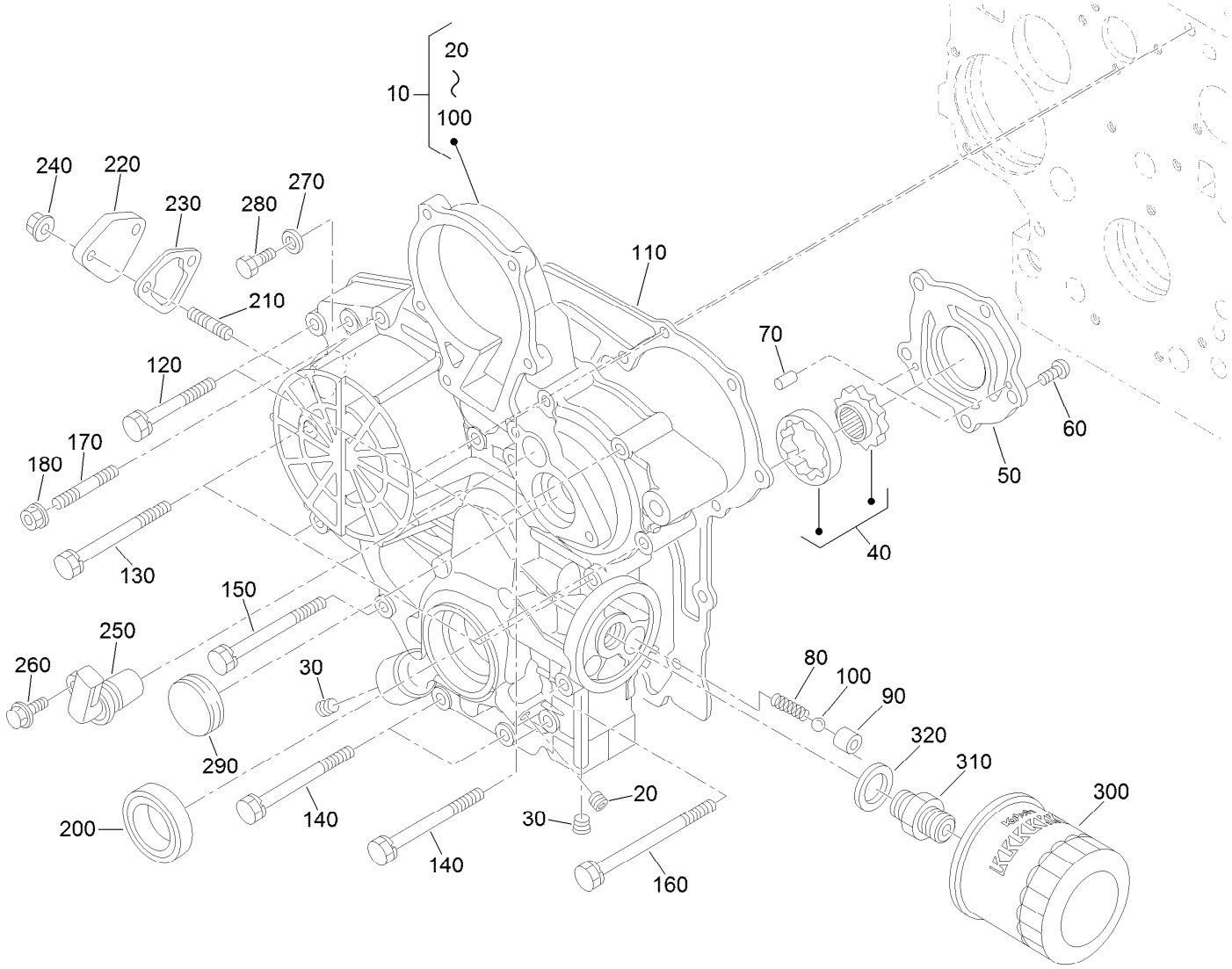


# Gear Case and Oil Filter Cartridge Assembly

| Ref. | Part Number | Qty. | Description |
|---|---|---|---|
| 10 | 127-0453 | 1 | Gear Case ASM |
| 20 | 98-7487 | 1 | Plug |
| 30 | 127-0425 | 2 | Plug |
| 40 | 98-9540 | 1 | Oil Pump Rotor ASM |
| 50 | 107-9069 | 1 | Cover-Pump, Oil |
| 60 | 107-9071 | 5 | Screw |
| 70 | 107-9072 | 2 | Pin-Straight |
| 80 | 98-9544 | 1 | Spring |
| 90 | 98-9543 | 1 | Seat-Valve |
| 100 | 98-9380 | 1 | Ball |
| 110 | 98-9633 | 1 | Gasket-Case, Gear |
| 120 | 100-1765 | 3 | Bolt |
| 130 | 105-3797 | 4 | Bolt |
| 140 | 98-9356 | 4 | Bolt |
| 150 | 107-9074 | 1 | Bolt |
| 160 | 98-9586 | 1 | Bolt |

| Ref. | Part Number | Qty. | Description |
|---|---|---|---|
| 170 | 105-3709 | 1 | Stud |
| 180 | 100-2203 | 1 | Nut-Flange |
| 200 | 119-8038 | 1 | Seal-Oil |
| 210 | 105-3710 | 2 | Stud |
| 220 | 99-3514 | 1 | Cover |
| 230 | 117-7562 | 1 | Gasket-Pump, Fuel |
| 240 | 100-2203 | 2 | Nut-Flange |
| 250 | 127-0504 | 1 | Sensor-Revolution |
| 260 | 99-8363 | 1 | Bolt-Flange |
| 270 | 98-7654 | 1 | Gasket |
| 280 | 127-0400 | 1 | Bolt-Hex |
| 290 | 99-3515 | 1 | Plug-Gearcase |
| 300 | 108-3841 | 1 | Filter-Oil |
| 310 | 98-9388 | 1 | Joint-Pipe |
| 320 | 98-7562 | 1 | Washer-Plain |

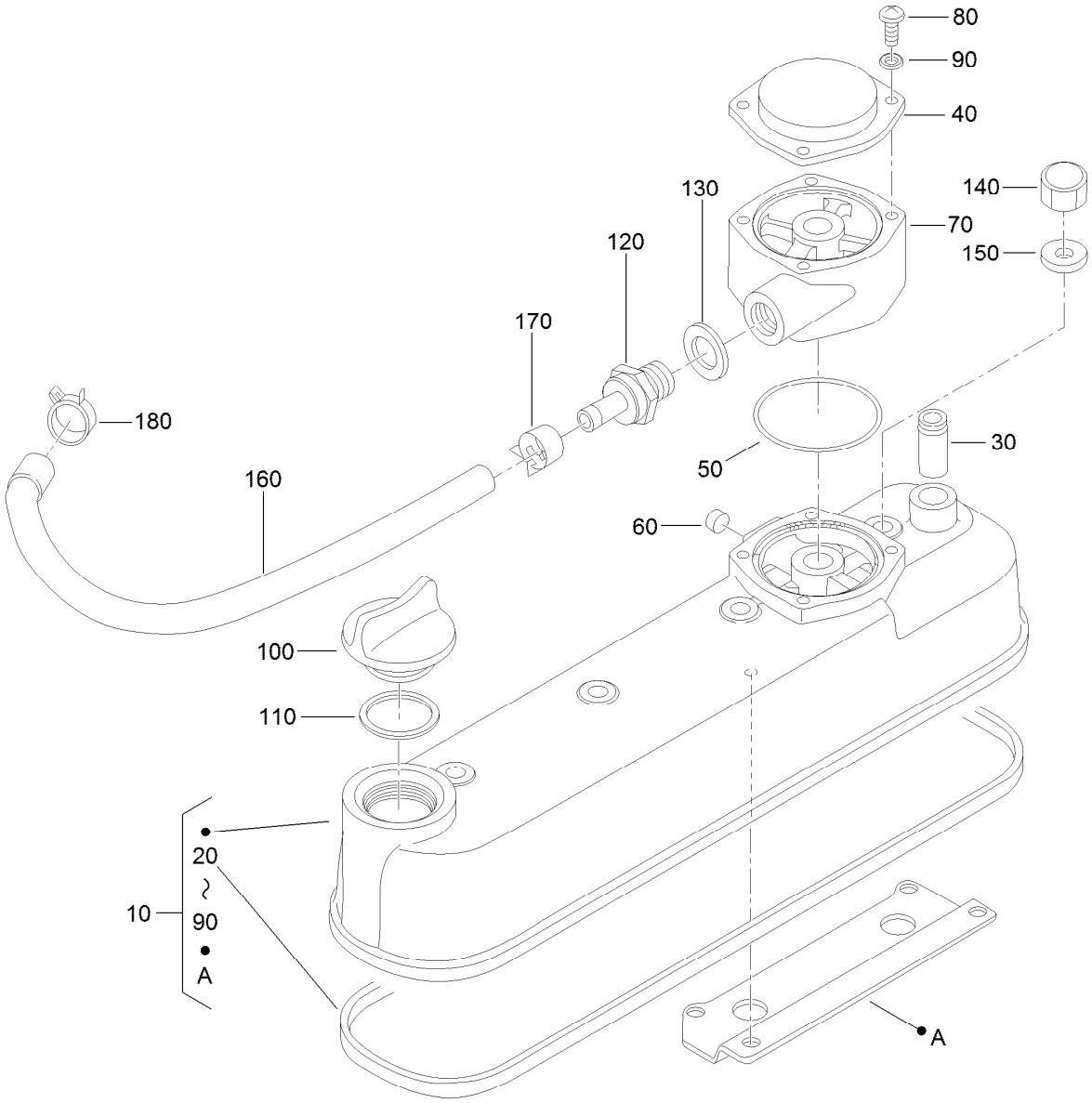


# Cylinder Head Cover Assembly

| Ref. | Part Number | Qty. | Description |
|---|---|---|---|
| 10 | 127-0479 | 1 | Cylinder Head Cover ASM |
| 20 | 105-3712 | 1 | Gasket-Cover, Head |
| 30 | 98-7766 | 1 | Pipe-Return, Water |
| 40 | 108-7060 | 1 | Cover-Breather |
| 50 | 110-3846 | 2 | O Ring-Breather |
| 60 | 115-3042 | 1 | Cap-Sealing |
| 70 | 127-0480 | 1 | Spacer-Breather |
| 80 | 115-3044 | 4 | Screw-Pan Head |
| 90 | 127-0408 | 4 | Washer-Lock, Spring |

| Ref. | Part Number | Qty. | Description |
|---|---|---|---|
| 100 | 107-9075 | 1 | Plug-Filler, Oil |
| 110 | 99-3446 | 1 | O-Ring |
| 120 | 127-0468 | 1 | Valve-Pcv |
| 130 | 98-7528 | 1 | O Ring-Copper |
| 140 | 98-9455 | 4 | Nut-Cap |
| 150 | 98-9454 | 4 | Gasket |
| 160 | 127-0469 | 1 | Tube-Breather |
| 170 | 127-0491 | 1 | Clamp-Hose |
| 180 | 98-9579 | 1 | Band-Pipe |

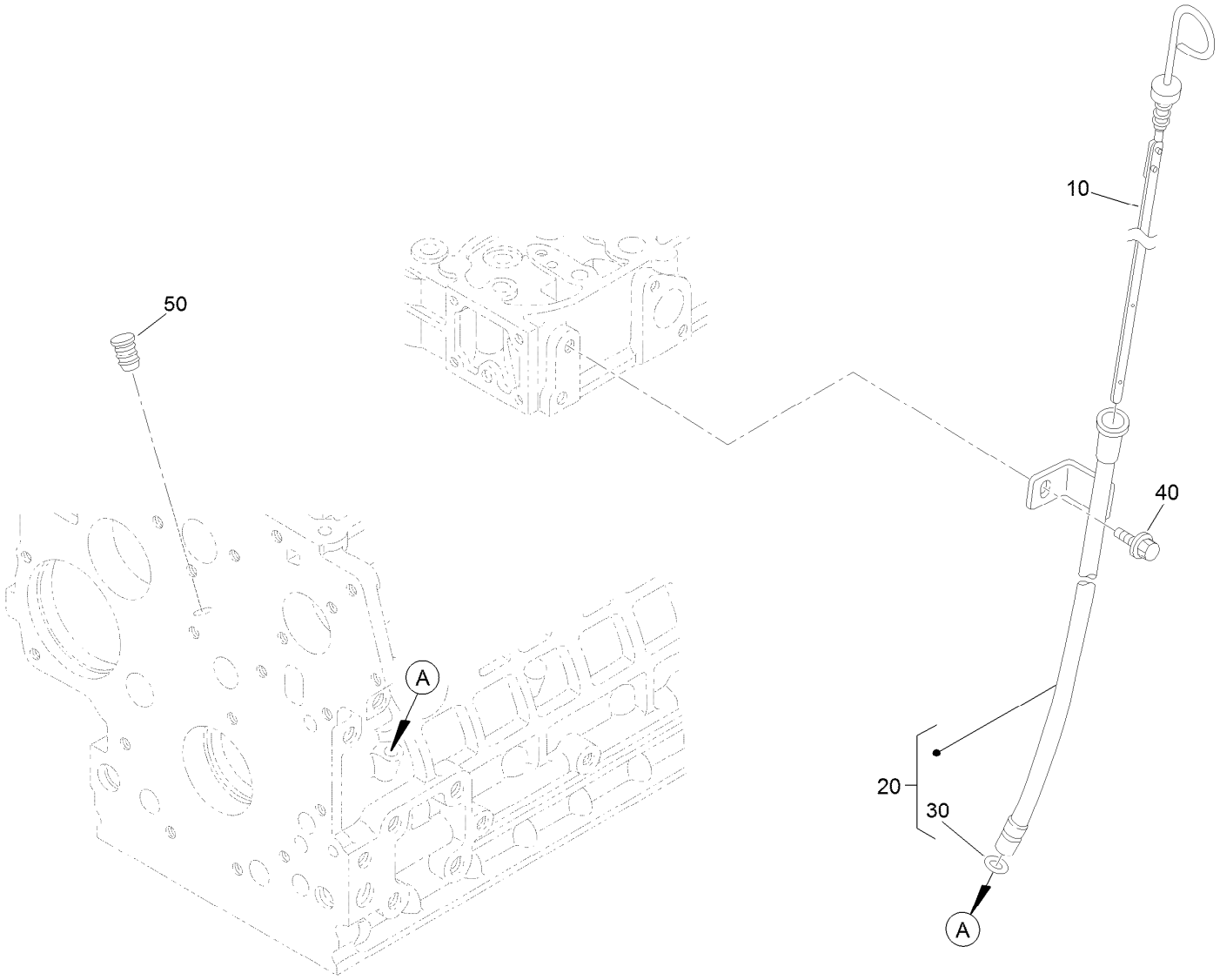


# Oil Dipstick and Guide Assembly

| *Ref.* | *Part Number* | *Qty.* | *Description* |
|---|---|---|---|
| 10 | 98-9670 | 1 | Gauge-Oil |
| 20 | 98-9672 | 1 | Oil Gauge Guide ASM |
| 30 | 98-9722 | 1 | O-Ring |
| 40 | 115-8504 | 1 | Bolt-Flange |
| 50 | 110-3720 | 1 | Plug-Gauge, Oil |

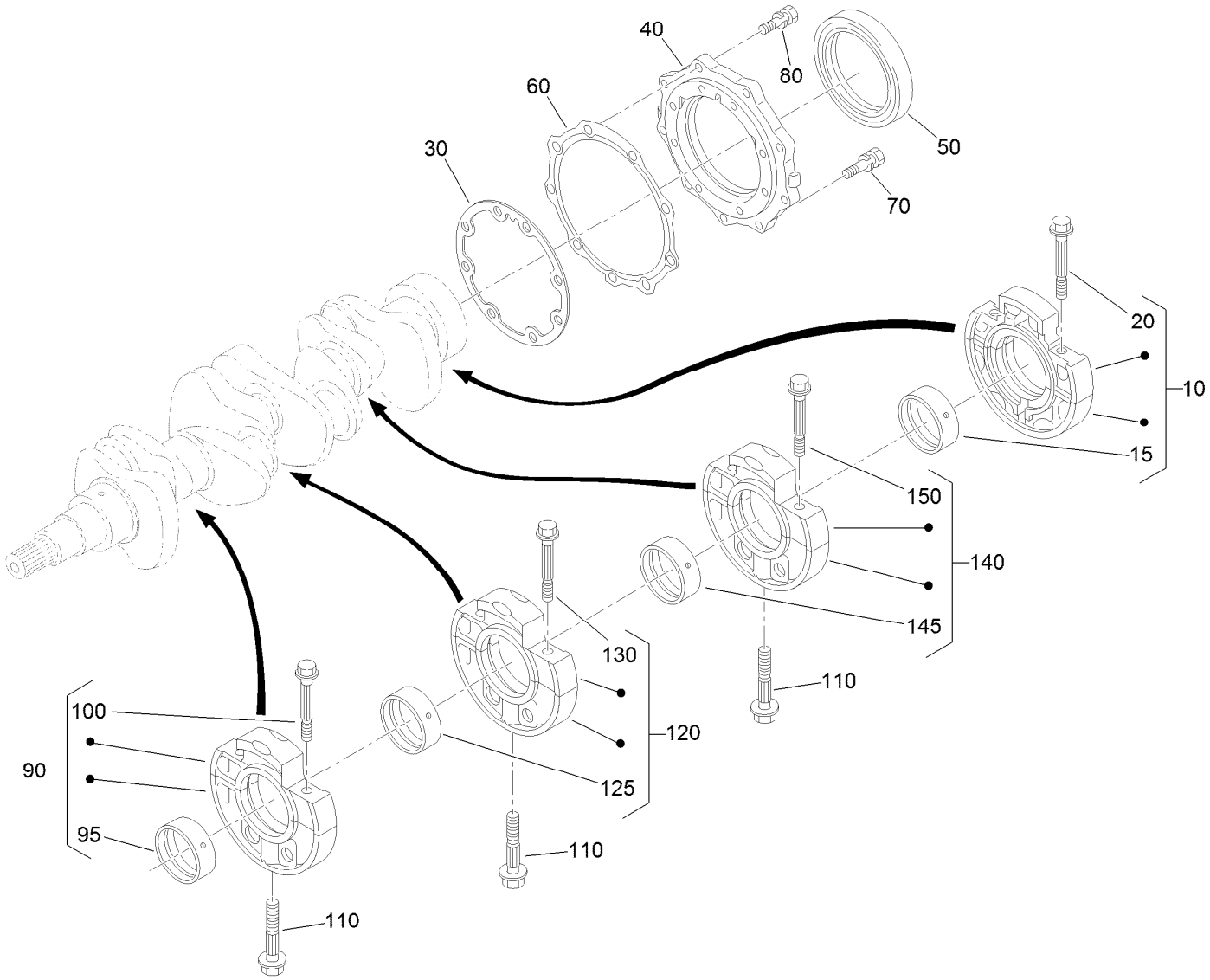


# Main Bearing Case Assembly

| Ref. | Part Number | Qty. | Description |
|---|---|---|---|
| 10 | 112-7026 | 1 | Wheel Bearing Case ASM |
| 15 | 98-9525 | 1 | Metal-Crankshaft (STD Set) |
| 20 | 98-9484 | 2 | Bolt-Case, Bearing |
| 30 | 127-0440 | 1 | Gasket-Case, Bearing |
| 40 | 112-7046 | 1 | Cover-Case, Bearing |
| 50 | 112-0180 | 1 | Seal-Oil |
| 60 | 112-7037 | 1 | Gasket-Cover, Case |
| 70 | 127-0441 | 8 | Bolt |
| 80 | 127-0442 | 9 | Bolt |
| 90 | 127-0427 | 1 | Main Bearing Case ASM |

| Ref. | Part Number | Qty. | Description |
|---|---|---|---|
| 95 | 98-9524 | 2 | Metal-Crankshaft (STD Set) |
| 100 | 98-9484 | 2 | Bolt-Case, Bearing |
| 110 | 98-9485 | 3 | Bolt-Case, Bearing |
| 120 | 127-0428 | 1 | Main Bearing Case ASM |
| 125 | 98-9524 | 1 | Metal-Crankshaft (STD Set) |
| 130 | 98-9484 | 2 | Bolt-Case, Bearing |
| 140 | 127-0429 | 1 | Bearing Case ASM |
| 145 | 98-9524 | 1 | Metal-Crankshaft (STD Set) |
| 150 | 98-9484 | 2 | Bolt-Case, Bearing |

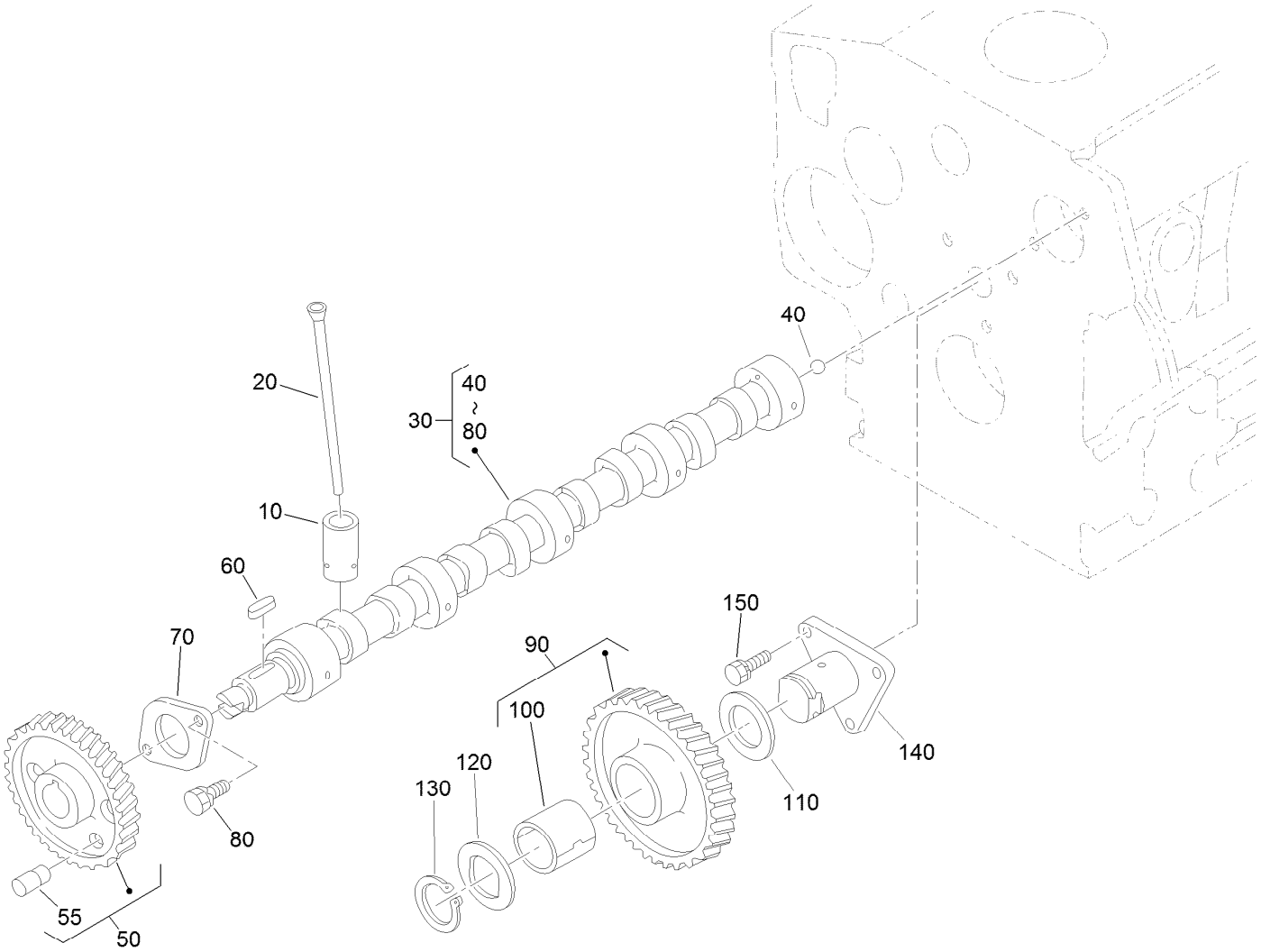


# Cam Shaft and Idle Gear Assembly

| Ref. | Part Number | Qty. | Description |
|---|---|---|---|
| 10 | 112-0185 | 8 | Tappet |
| 20 | 127-0421 | 8 | Rod-Push |
| 30 | 127-0481 | 1 | Camshaft ASM |
| 40 | 110-3729 | 1 | Ball |
| 50 | 127-0482 | 1 | Cam Gear ASM |
| 55 | 127-0483 | 1 | Pin-Gear, Cam |
| 60 | 98-9378 | 1 | Key-Feather |
| 70 | 98-9510 | 1 | Stopper-Camshaft |

| Ref. | Part Number | Qty. | Description |
|---|---|---|---|
| 80 | 98-7692 | 2 | Bolt |
| 90 | 117-7584 | 1 | Idler Gear ASM |
| 100 | 117-7585 | 1 | Bushing-Gear, Idle |
| 110 | 98-9535 | 1 | Collar-Gear, Idle |
| 120 | 98-9536 | 1 | Collar-Gear, Idle |
| 130 | 98-9534 | 1 | Circlip-Gear, Idle |
| 140 | 98-9533 | 1 | Shaft-Gear, Idle |
| 150 | 98-7692 | 3 | Bolt |

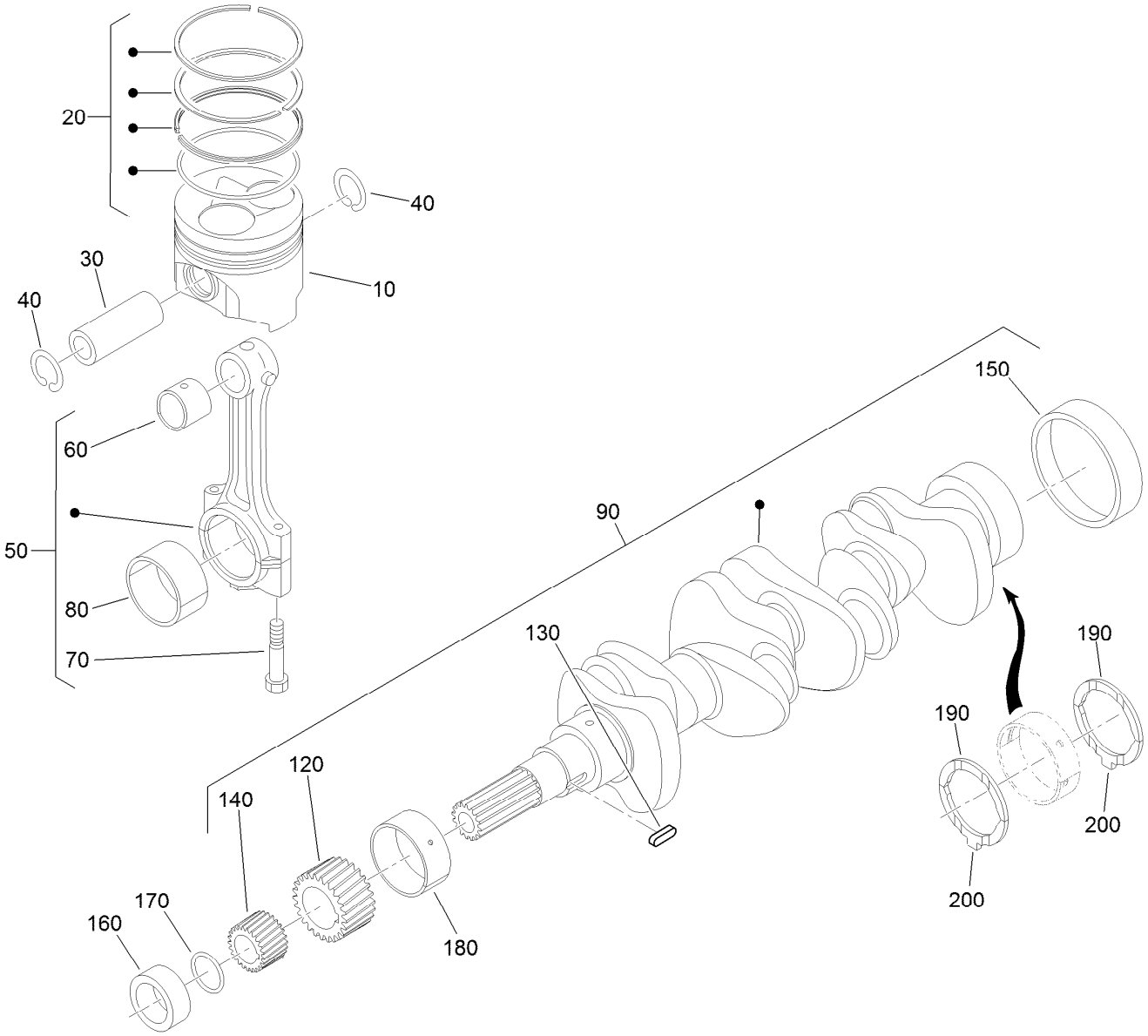


# Piston and Crankshaft Assembly

| Ref. | Part Number | Qty. | Description |
|---|---|---|---|
| 10 | 127-0487 | 4 | Piston (STD) |
| 10 | 127-0488 | 4 | Piston (+0.50Mm) |
| 20 | 127-0485 | 4 | Piston Ring ASM (STD) |
| 20 | 127-0486 | 4 | Piston Ring ASM (+0.50Mm) |
| 30 | 98-9513 | 4 | Pin-Piston |
| 40 | 98-9514 | 8 | Circlip-Pin, Piston |
| 50 | 117-7586 | 4 | Connecting Rod ASM |
| 60 | 115-3014 | 4 | Bushing-Pin, Piston |
| 70 | 98-9517 | 8 | Bolt-Rod, Connecting |
| 80 | 98-9553 | 4 | Bearing-Rod (STD) |
| 80 | 98-9519 | 4 | Bearing-Rod (-0.2Mm) |
| 80 | 117-7588 | 4 | Metal-Crankpin (-0.4Mm) |
| 90 | 127-0433 | 1 | Metal-Crankshaft (-0.2Mm) |
| 120 | 117-7561 | 1 | Gear-Crankshaft |

| Ref. | Part Number | Qty. | Description |
|---|---|---|---|
| 130 | 98-9666 | 1 | Key |
| 140 | 127-0445 | 1 | Gear-Drive, Oil Pump |
| 150 | 98-9522 | 1 | Sleeve-Crankshaft |
| 160 | 127-0444 | 1 | Collar-Crankshaft |
| 170 | 105-3783 | 1 | O-Ring |
| 180 | 98-9524 | 3 | Metal-Crankshaft (STD Set) |
| 180 | 127-0433 | 3 | Metal-Crankshaft (-0.2Mm) |
| 180 | 127-0432 | 1 | Metal-Crankshaft (-0.4Mm) |
| 190 | 98-9413 | 2 | Bearing-Thrust (STD) |
| 190 | 127-0416 | 2 | Metal-Side (+0.2Mm) |
| 190 | 127-0417 | 2 | Metal-Side (+0.40Mm) |
| 200 | 98-9688 | 2 | Bearing-Thrust (STD) |
| 200 | 127-0437 | 2 | Metal-Side (+0.2Mm) |
| 200 | 127-0438 | 2 | Metal-Side (+0.40Mm) |

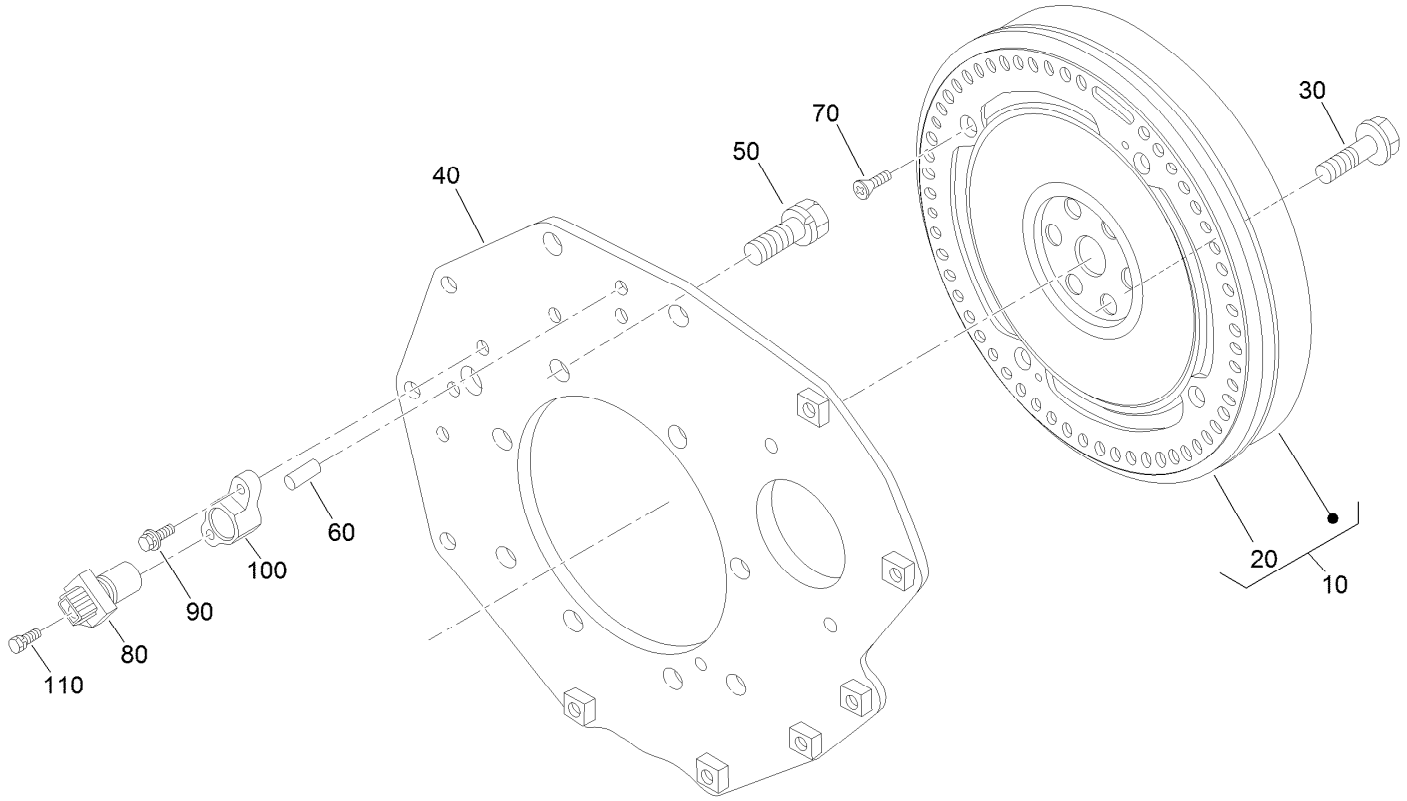


# Flywheel and Sensor Switch Assembly

| *Ref.* | *Part Number* | *Qty.* | *Description* |
|---|---|---|---|
| 10 | 127-0489 | 1 | Flywheel ASM |
| 20 | 115-3015 | 1 | Gear-Ring |
| 30 | 98-9537 | 6 | Bolt-Flywheel |
| 40 | 127-0454 | 1 | Plate-End, Rear |
| 50 | 98-9392 | 8 | Bolt |
| 60 | 127-0412 | 2 | Pin-Straight |
| 70 | 127-0407 | 4 | Screw-Head, Flat |
| 80 | 125-9103 | 1 | Sensor Stick ASM |
| 90 | 127-0403 | 1 | Bolt-Flange |
| 100 | 127-0494 | 1 | Holder-Sensor |
| 110 | 127-0404 | 1 | Bolt-Flange |

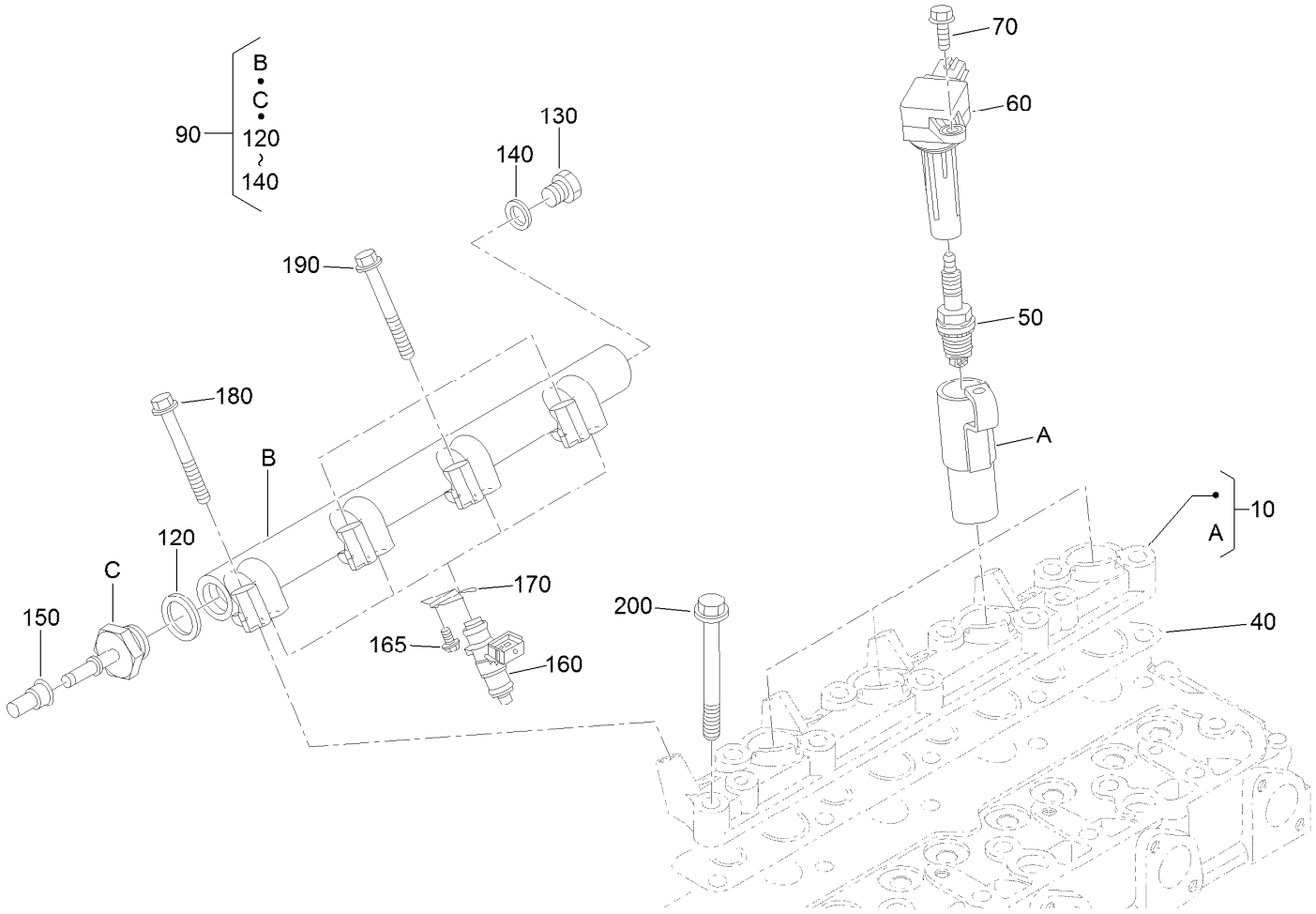


# Ignition Coil and Delivery Pipe Assembly

| Ref. | Part Number | Qty. | Description |
|---|---|---|---|
| 10 | 127-0459 | 1 | Flange-Injector |
| 40 | 127-0460 | 1 | Gasket-Flange |
| 50 | 127-0499 | 4 | Spark Plug |
| 60 | 127-0498 | 4 | Coil-Ignition |
| 70 | 99-8363 | 4 | Bolt-Flange |
| 90 | 127-0509 | 1 | Delivery Pipe ASM |
| 120 | 127-0411 | 1 | Packing |
| 130 | 127-0413 | 1 | Plug |

| Ref. | Part Number | Qty. | Description |
|---|---|---|---|
| 140 | 125-9096 | 1 | Gasket |
| 150 | 127-0456 | 1 | Cap-Fuel |
| 160 | 125-9107 | 4 | Injector |
| 165 | 100-1774 | 4 | Bolt-Flange |
| 170 | 127-0458 | 4 | Stopper-Injector |
| 180 | 127-0404 | 1 | Bolt-Flange |
| 190 | 127-0405 | 3 | Bolt-Flange |
| 200 | 127-0466 | 9 | Bolt-Head, Cylinder |

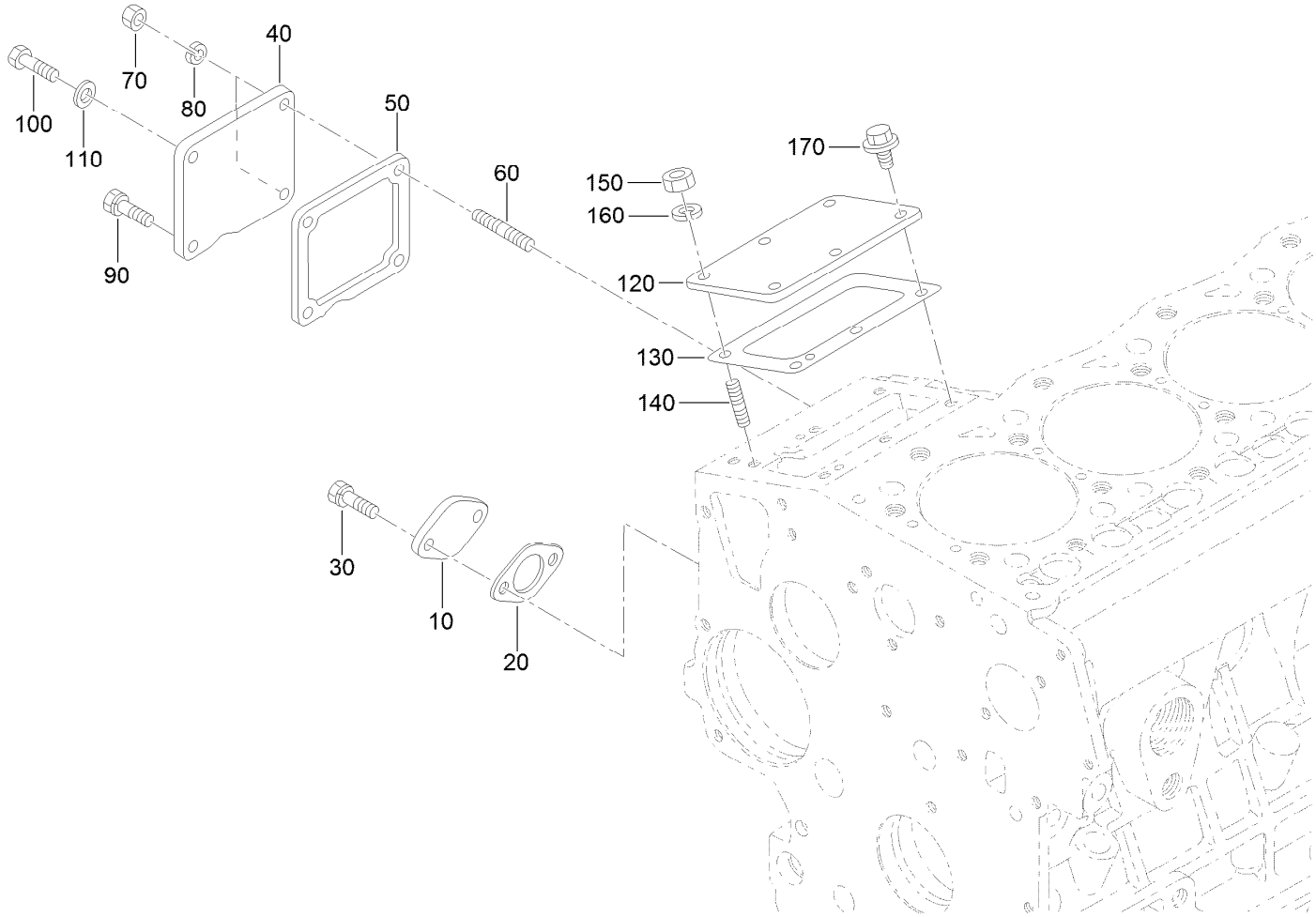


# Engine Covers Assembly

| Ref. | Part Number | Qty. | Description |
|---|---|---|---|
| 10 | 115-4122 | 1 | Cover-Shaft, Fork Lever |
| 20 | 98-9682 | 1 | Gasket |
| 30 | 98-9350 | 2 | Bolt |
| 40 | 127-0418 | 1 | Cover |
| 50 | 98-9637 | 1 | Gasket |
| 60 | 105-3710 | 2 | Stud |
| 70 | 98-7572 | 2 | Nut |
| 80 | 98-7699 | 2 | Washer-Spring |
| 90 | 98-9350 | 1 | Bolt |

| Ref. | Part Number | Qty. | Description |
|---|---|---|---|
| 100 | 127-0401 | 1 | Bolt-Hex |
| 110 | 98-7654 | 1 | Gasket |
| 120 | 127-0465 | 1 | Cover-Pump, Injection |
| 130 | 105-3728 | 1 | Shim-Pump, Injection (.20Mm) |
| 140 | 98-9438 | 3 | Stud |
| 150 | 100-1776 | 3 | Nut |
| 160 | 98-7699 | 3 | Washer-Spring |
| 170 | 100-1774 | 3 | Bolt-Flange |

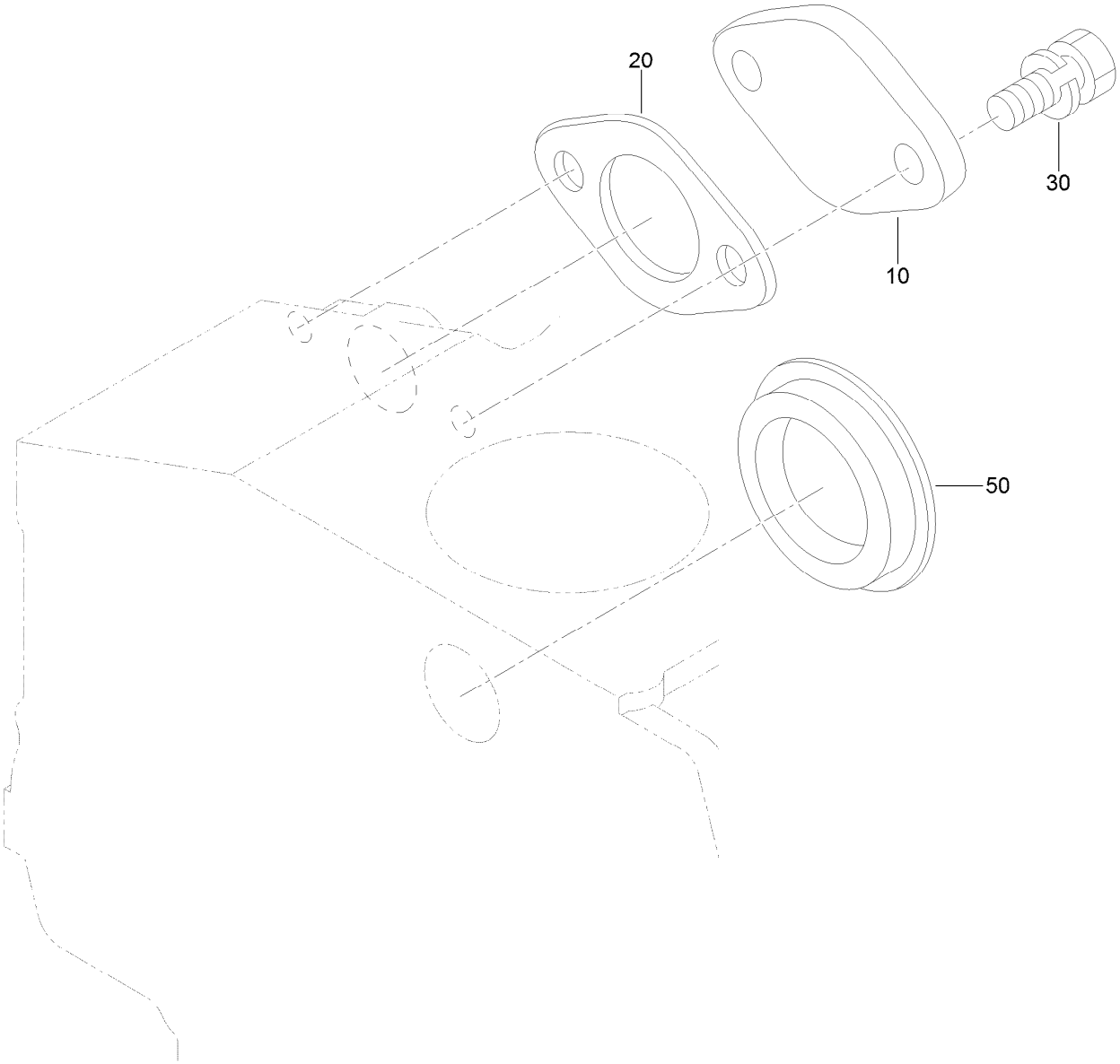


# Solenoid Cover and Hydraulic Pump Cover

| *Ref.* | *Part Number* | *Qty.* | *Description* |
|---|---|---|---|
| 10 | 127-0419 | 1 | Cover-Solenoid |
| 20 | 98-9683 | 1 | Gasket-Cover, Solenoid |
| 30 | 98-7692 | 2 | Bolt |
| 50 | 112-7016 | 1 | Cover-Pump |

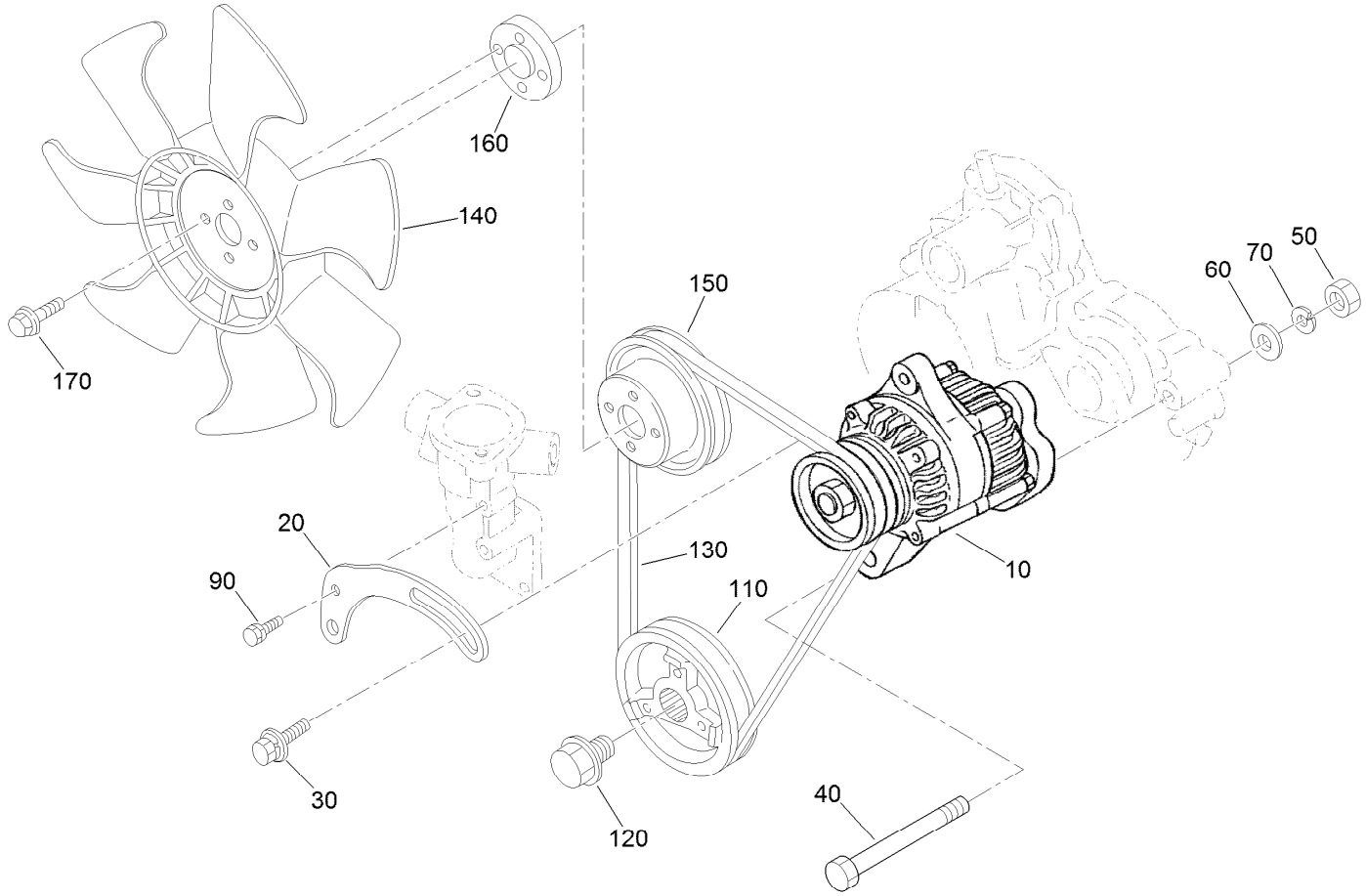


# Alternator, Pulley and Fan Assembly

| Ref. | Part Number | Qty. | Description |
|---|---|---|---|
| 10 | 131-9567 | 1 | 60 Amp Alternator ASM |
| 20 | 117-5542 | 1 | Bracket |
| 30 | 108-7088 | 1 | Bolt |
| 40 | 98-9360 | 1 | Bolt |
| 50 | 98-7737 | 1 | Nut |
| 60 | 98-9366 | 1 | Washer-Plain |
| 70 | 98-7738 | 1 | Washer-Spring |
| 90 | 98-7692 | 1 | Bolt |
| 110 | 105-3745 | 1 | Pulley-Drive, Fan |
| 120 | 98-9585 | 1 | Bolt |
| 130 | 104-3494 | 1 | Belt-V |
| 140 | 131-5803 | 1 | Fan |
| 150 | 98-9584 | 1 | Pulley-Fan |
| 160 | 108-2872 | 1 | Collar-Fan |
| 170 | 114-8414 | 4 | Screw-HHF |

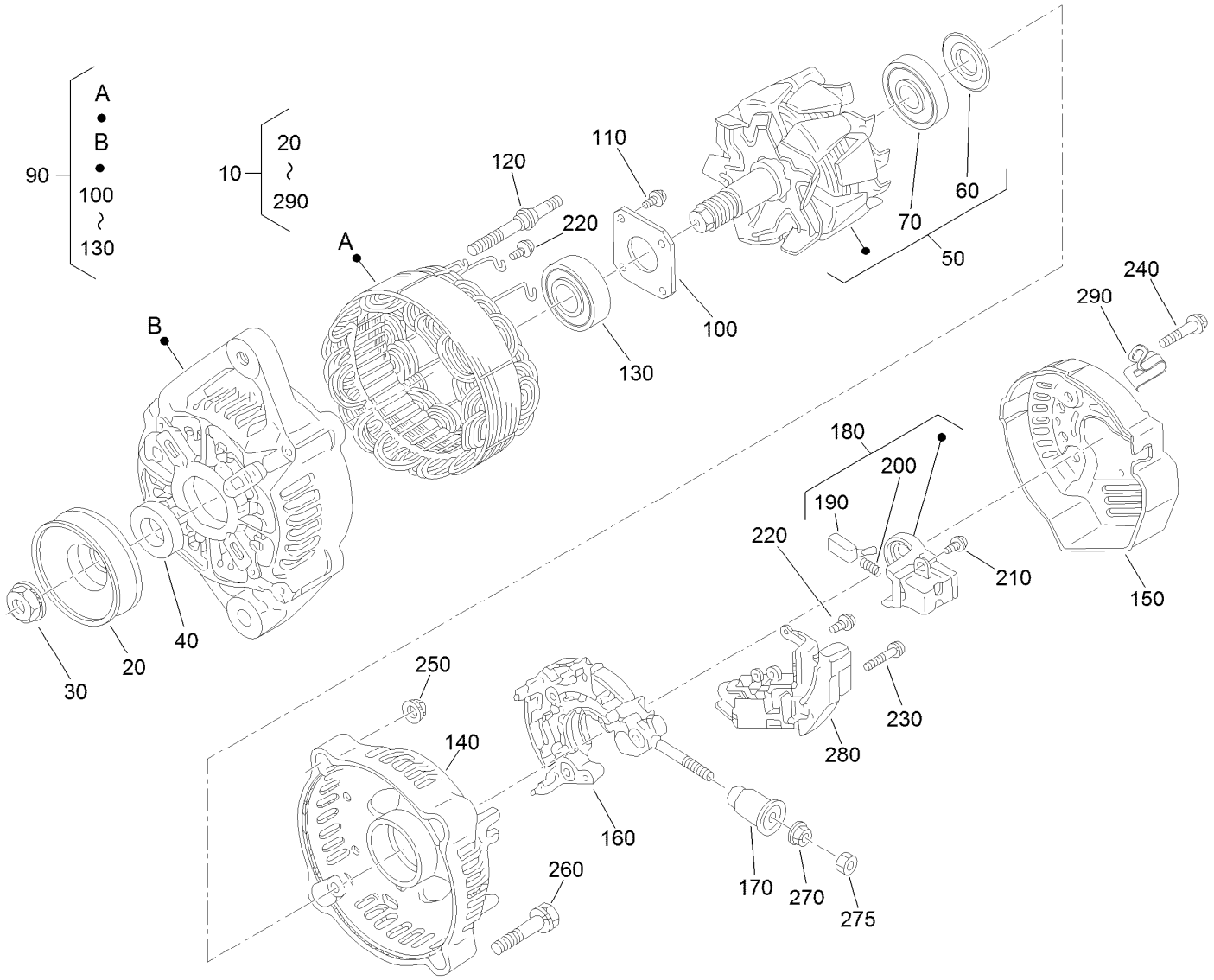


# Alternator Components

| Ref. | Part Number | Qty. | Description |
|---|---|---|---|
| 10 | 131-9567 | 1 | 60 Amp Alternator ASM |
| 20 | 98-9453 | 1 | Pulley-Dynamo |
| 30 | 98-7708 | 1 | Nut |
| 40 | 98-7709 | 1 | Collar |
| 50 | 107-0136 | 1 | Rotor ASM |
| 60 | 98-7711 | 1 | Cover-Bearing |
| 70 | 107-0138 | 1 | Bearing-Ball |
| 90 | 131-9573 | 1 | Frame-End, Drive |
| 100 | 98-7715 | 1 | Plate-Retainer |
| 110 | 98-7716 | 4 | Screw-Head, Round |
| 120 | 98-7717 | 2 | Bolt-Through |
| 130 | 133-2811 | 1 | Bearing |
| 140 | 121-3812 | 1 | Frame-End |
| 150 | 121-3813 | 1 | Cover-End |
| 160 | 121-3805 | 1 | Rectifier ASM |

| Ref. | Part Number | Qty. | Description |
|---|---|---|---|
| 170 | 117-0321 | 1 | Insulation-Brush |
| 180 | 107-0141 | 1 | Brush Holder ASM |
| 190 | 98-7724 | 2 | Brush |
| 200 | 98-7725 | 2 | Spring-Brush |
| 210 | 98-7726 | 2 | Screw-Head, Round |
| 220 | 98-7727 | 6 | Screw-Head, Round |
| 230 | 98-7728 | 1 | Screw-Head, Round |
| 240 | 98-7729 | 3 | Bolt |
| 250 | 98-7730 | 2 | Nut |
| 260 | 98-7731 | 2 | Bolt |
| 270 | 98-7732 | 1 | Nut |
| 275 | 100-1776 | 1 | Nut |
| 280 | 121-3809 | 1 | Regulator ASM |
| 290 | 120-5841 | 1 | Clamp-Cord |

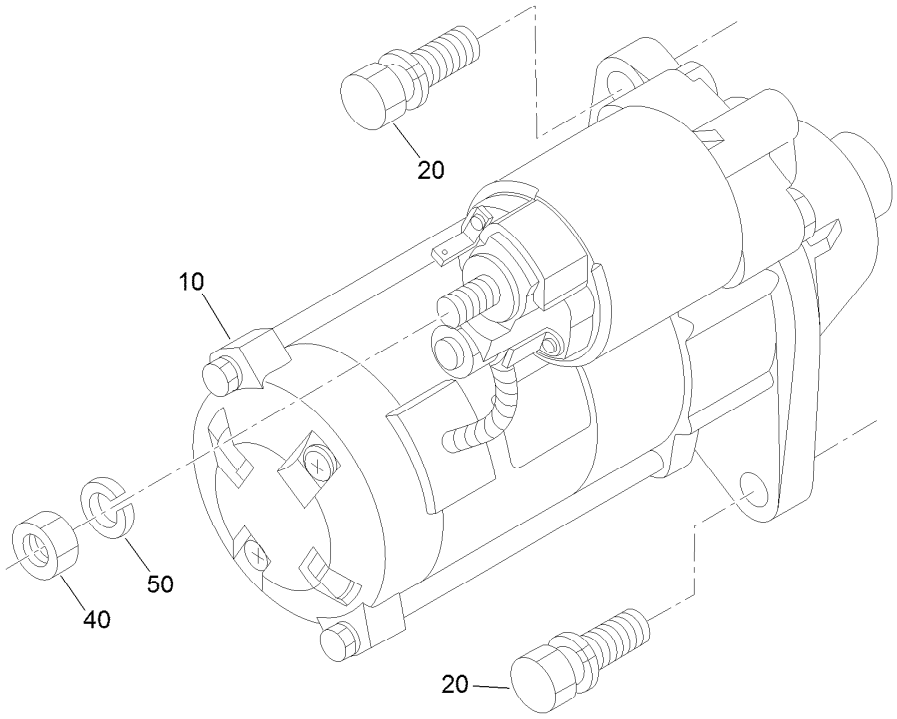


# Starter Installation Assembly

| *Ref.* | *Part Number* | *Qty.* | *Description* |
|---|---|---|---|
| 10 | 127-0495 | 1 | Starter ASM |
| 20 | 98-7697 | 2 | Bolt |
| 40 | 98-7739 | 1 | Nut |
| 50 | 3253-4 | 1 | Washer-Lock |

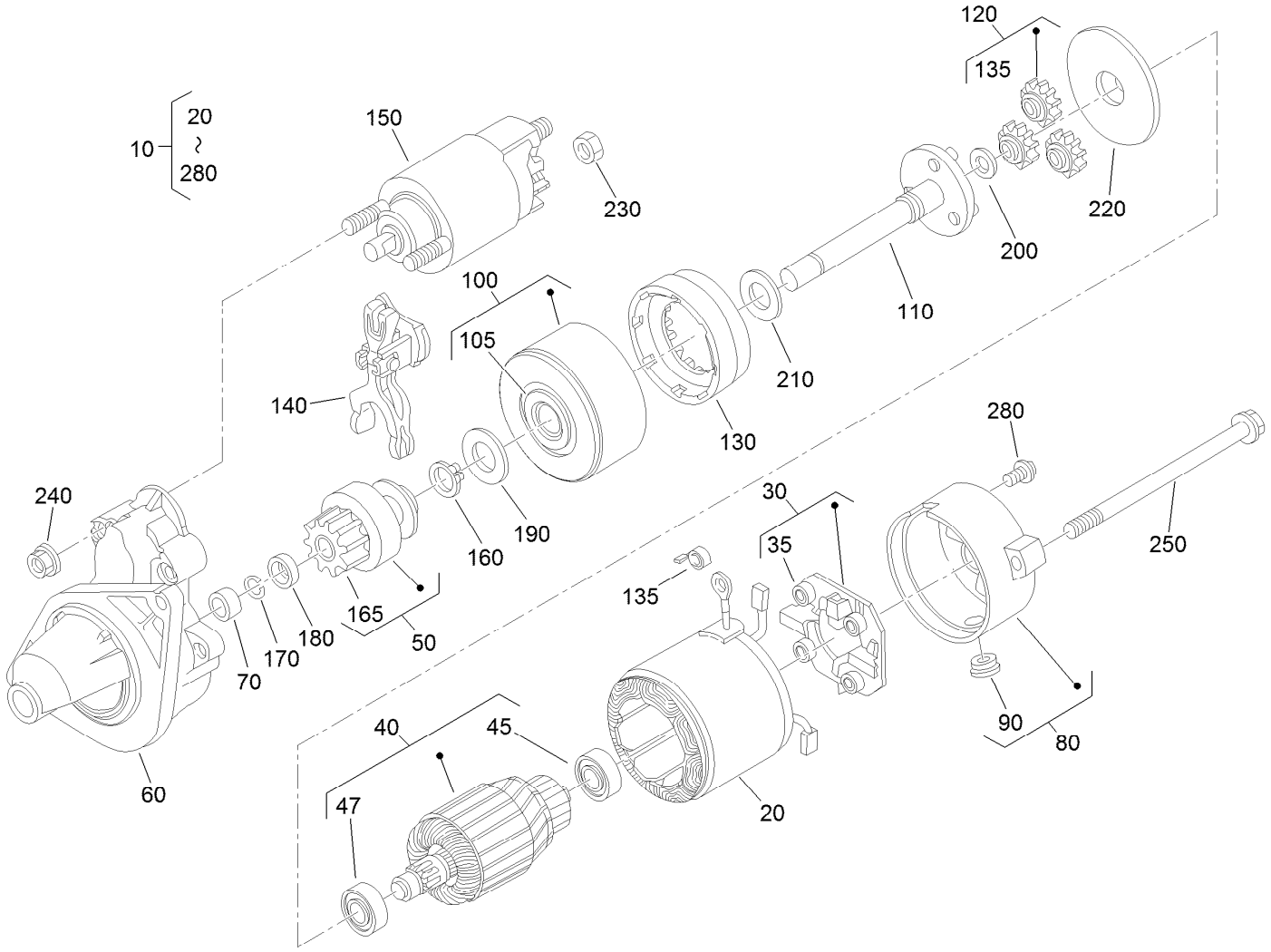


# Starter Components Assembly

| Ref. | Part Number | Qty. | Description |
|---|---|---|---|
| 10 | 127-0495 | 1 | Starter ASM |
| 20 | 100-2181 | 1 | Starter Yoke ASM |
| 30 | 100-2222 | 1 | Holder ASM |
| 35 | 127-0415 | 4 | Spring-Brush |
| 40 | 100-2182 | 1 | Armature ASM |
| 45 | 98-9412 | 1 | Bearing-Ball |
| 47 | 98-9411 | 1 | Bearing-Ball |
| 50 | 100-2185 | 1 | Starter Clutch ASM |
| 60 | 127-0490 | 1 | Starter Housing ASM |
| 70 | 100-2183 | 1 | Bearing |
| 80 | 127-0449 | 1 | Frame ASM |
| 90 | 100-2213 | 1 | Cover |
| 100 | 100-2223 | 1 | Bearing ASM |
| 105 | 127-0414 | 1 | Bearing |
| 110 | 100-2187 | 1 | Starter Shaft ASM |
| 120 | 100-2220 | 3 | Gear |

| Ref. | Part Number | Qty. | Description |
|---|---|---|---|
| 130 | 100-2221 | 1 | Gear |
| 135 | 98-7750 | 4 | Spring-Brush |
| 140 | 100-2218 | 1 | Lever |
| 150 | 127-0448 | 1 | Switch-Magnetic |
| 160 | 100-2219 | 1 | Ring-Snap |
| 165 | 112-2833 | 1 | Gear-Pinion |
| 170 | 100-2212 | 1 | Ring-Snap |
| 180 | 100-2216 | 1 | Collar |
| 190 | 100-2224 | 1 | Washer-Plain |
| 200 | 100-2225 | 1 | Washer-Plain |
| 210 | 100-2226 | 1 | Washer-Plain |
| 220 | 100-2227 | 1 | Plate |
| 230 | 99-8371 | 1 | Nut-Hex |
| 240 | 100-1813 | 2 | Nut |
| 250 | 100-2210 | 2 | Bolt-Through |
| 280 | 100-2188 | 2 | Screw |

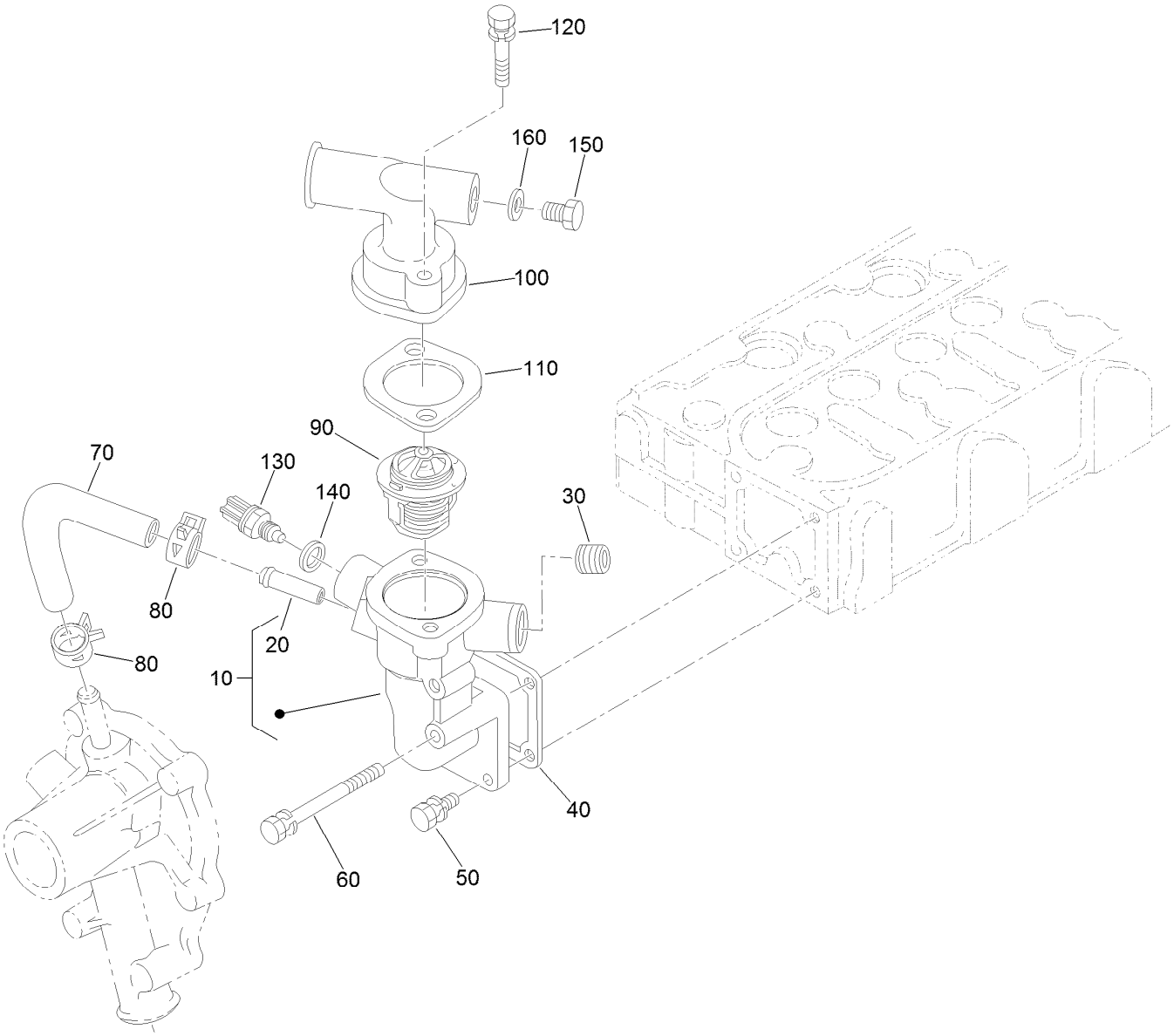


# Water Flange and Thermostat Assembly

| Ref. | Part Number | Qty. | Description |
|---|---|---|---|
| 10 | 127-0435 | 1 | Water Flange ASM |
| 20 | 98-9580 | 1 | Pipe-Return, Water |
| 30 | 105-2874 | 1 | Plug |
| 40 | 98-9638 | 1 | Gasket-Flange, Water |
| 50 | 98-7692 | 3 | Bolt |
| 60 | 98-9356 | 1 | Bolt |
| 70 | 98-9578 | 1 | Pipe-Return, Water |
| 80 | 125-9078 | 2 | Clamp-Hose |

| Ref. | Part Number | Qty. | Description |
|---|---|---|---|
| 90 | 98-7778 | 1 | Thermostat ASM |
| 100 | 108-2869 | 1 | Cover-Thermostat |
| 110 | 105-3748 | 1 | Gasket-Thermostat |
| 120 | 98-7777 | 2 | Bolt |
| 130 | 125-9102 | 1 | Sensor-Temperature, Water |
| 140 | 127-0410 | 1 | Washer-Seal |
| 150 | 108-2870 | 1 | Plug-Drain |
| 160 | 100-9155 | 1 | Gasket |

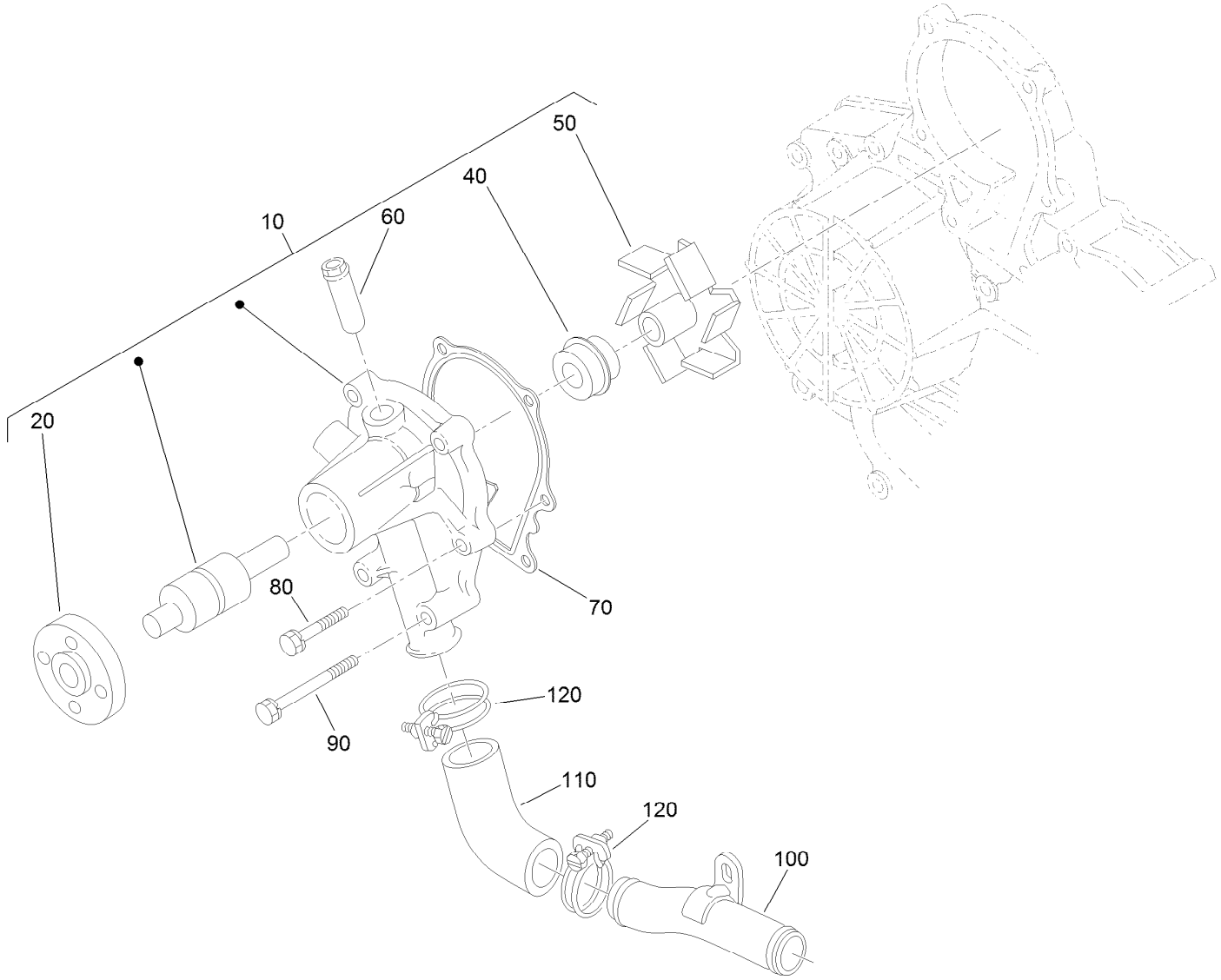


# Water Pump Assembly

| Ref. | Part Number | Qty. | Description |
|---|---|---|---|
| 10 | 107-9089 | 1 | Water Pump ASM |
| 20 | 99-3516 | 1 | Flange-Pump, Water |
| 40 | 105-3750 | 1 | Mechanical Seal ASM |
| 50 | 112-7017 | 1 | Impeller-Pump, Water |
| 60 | 100-1932 | 1 | Pipe-Return, Water |
| 70 | 99-3454 | 1 | Gasket-Pump, Water |
| 80 | 98-9353 | 4 | Bolt |
| 90 | 107-9090 | 2 | Bolt |
| 100 | 98-9716 | 1 | Pipe-Water |
| 110 | 107-9091 | 1 | Pipe-Water |
| 120 | 127-0439 | 2 | Clamp-Hose |

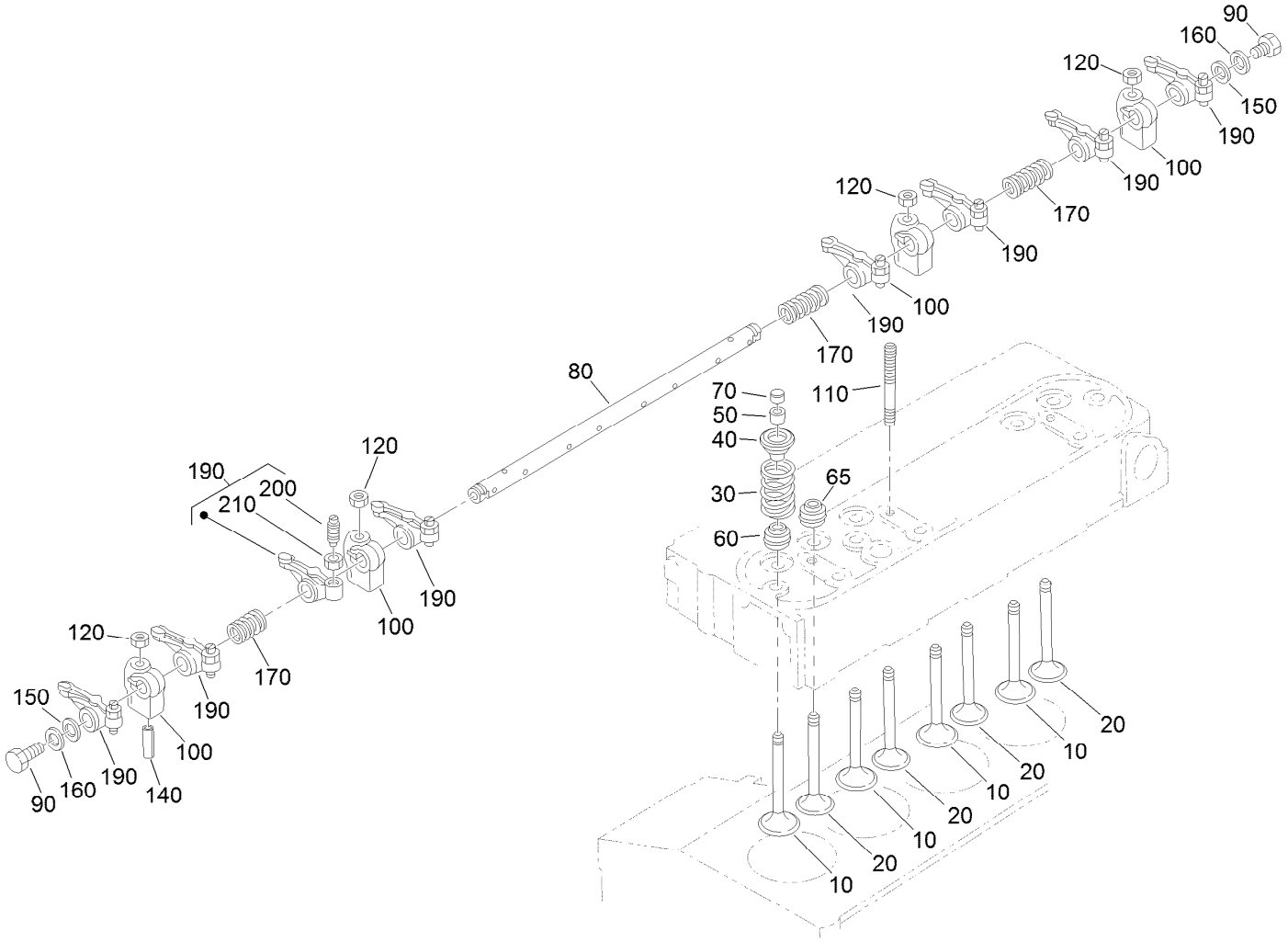


# Valve and Rocker Arm Assembly

| Ref. | Part Number | Qty. | Description |
|---|---|---|---|
| 10 | 127-0475 | 4 | Valve-Intake |
| 20 | 127-0476 | 4 | Valve-Exhaust |
| 30 | 98-9626 | 8 | Spring-Valve |
| 40 | 107-9092 | 8 | Retainer-Spring |
| 50 | 117-7572 | 8 | Collet-Spring, Valve |
| 60 | 99-8385 | 4 | Seal-Stem, Valve |
| 65 | 127-0477 | 4 | Seal-Stem, Valve |
| 70 | 98-9497 | 8 | Cap-Valve |
| 80 | 127-0420 | 1 | Shaft-Arm, Rocker |
| 90 | 99-8363 | 2 | Bolt-Flange |

| Ref. | Part Number | Qty. | Description |
|---|---|---|---|
| 100 | 98-9505 | 4 | Bracket-Arm, Rocker |
| 110 | 98-9506 | 4 | Stud |
| 120 | 131-6563 | 4 | Nut-Flange |
| 140 | 105-3758 | 1 | Pin-Spring |
| 150 | 98-9507 | 2 | Washer-Shaft, Rocker Arm |
| 160 | 110-3832 | 2 | Washer-Plain |
| 170 | 98-9504 | 3 | Spring-Arm, Rocker |
| 190 | 112-7020 | 8 | Rocker Arm ASM |
| 200 | 98-9502 | 8 | Screw-Adjusting |
| 210 | 98-9503 | 8 | Nut |

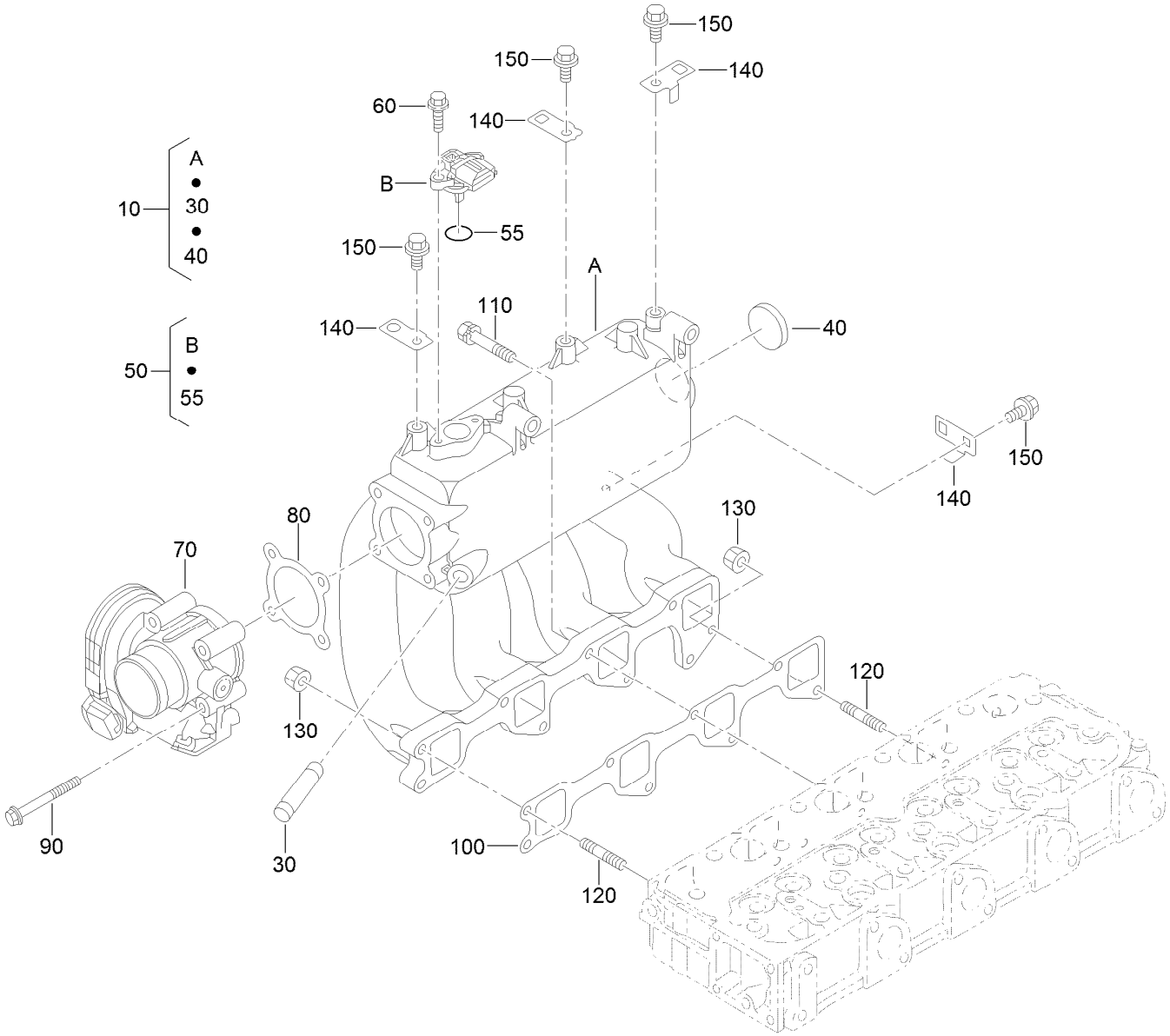


# Inlet Manifold Assembly

| Ref. | Part Number | Qty. | Description |
|---|---|---|---|
| 10 | 127-0471 | 1 | Manifold-Intake |
| 30 | 127-0470 | 1 | Joint-Tube, Breather |
| 40 | 98-7539 | 1 | Cap-Sealing |
| 50 | 125-9110 | 1 | Sensor (Tmap) |
| 55 | 125-9112 | 1 | O Ring |
| 60 | 125-9111 | 2 | Bolt-Flange |
| 70 | 127-0492 | 1 | Throttle Body ASM |
| 80 | 127-0493 | 1 | Gasket-Throttle |
| 90 | 127-0405 | 1 | Bolt-Flange |
| 100 | 127-0472 | 1 | Gasket-Intake |
| 110 | 98-9352 | 6 | Bolt |
| 120 | 125-9092 | 2 | Stud |
| 130 | 100-2203 | 2 | Nut-Flange |
| 140 | 127-0496 | 4 | Bracket-Harness |
| 150 | 100-1774 | 4 | Bolt-Flange |

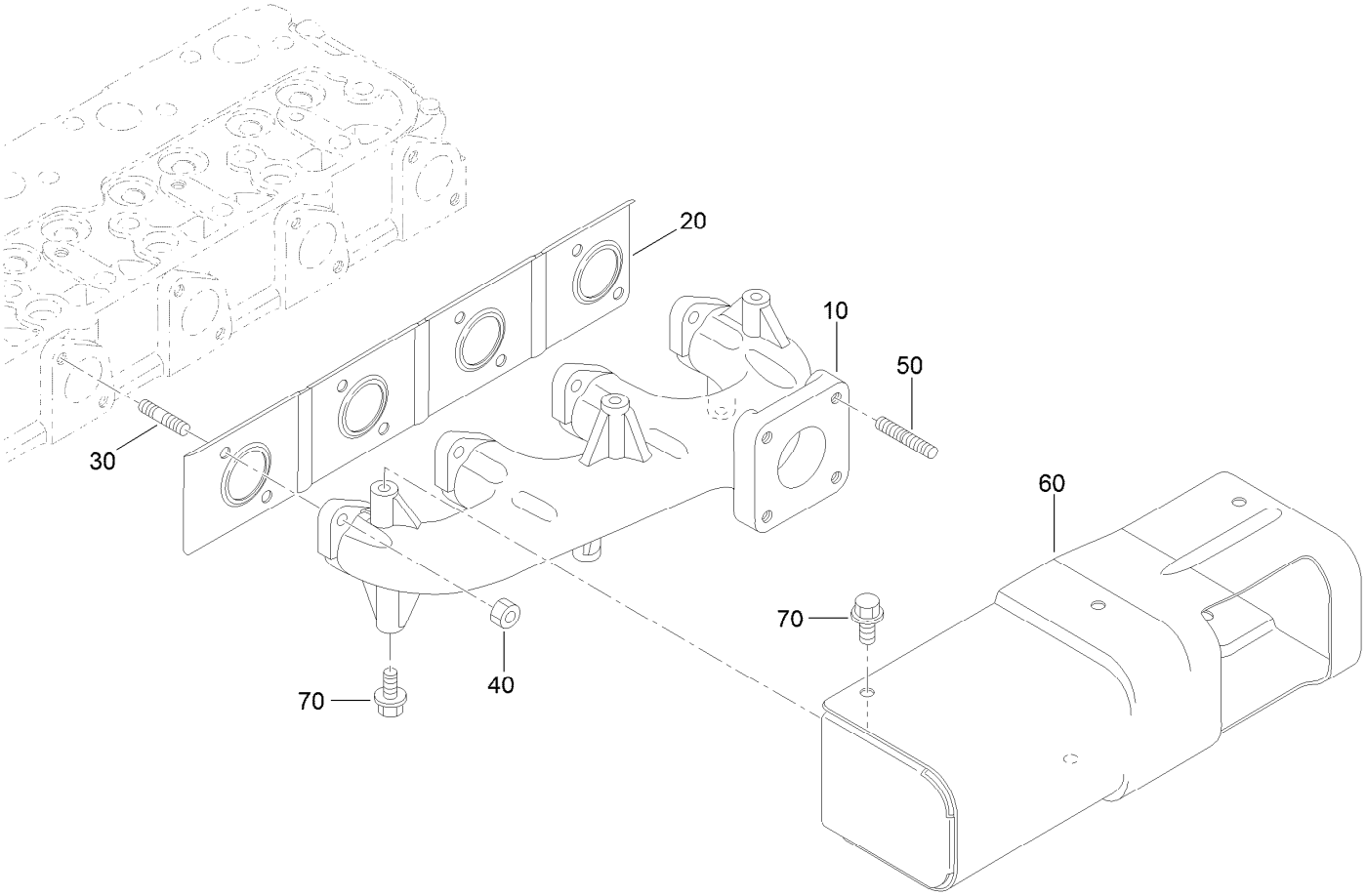


# Exhaust Manifold Assembly

| Ref. | Part Number | Qty. | Description |
|---|---|---|---|
| 10 | 131-9592 | 1 | Manifold-Exhaust |
| 20 | 127-0474 | 1 | Gasket-Manifold, Exhaust |
| 30 | 127-0507 | 8 | Stud |
| 40 | 98-9665 | 8 | Nut |
| 50 | 127-0446 | 4 | Stud |
| 60 | 131-9593 | 1 | Cover-Exhaust |
| 70 | 99-8363 | 6 | Bolt-Flange |

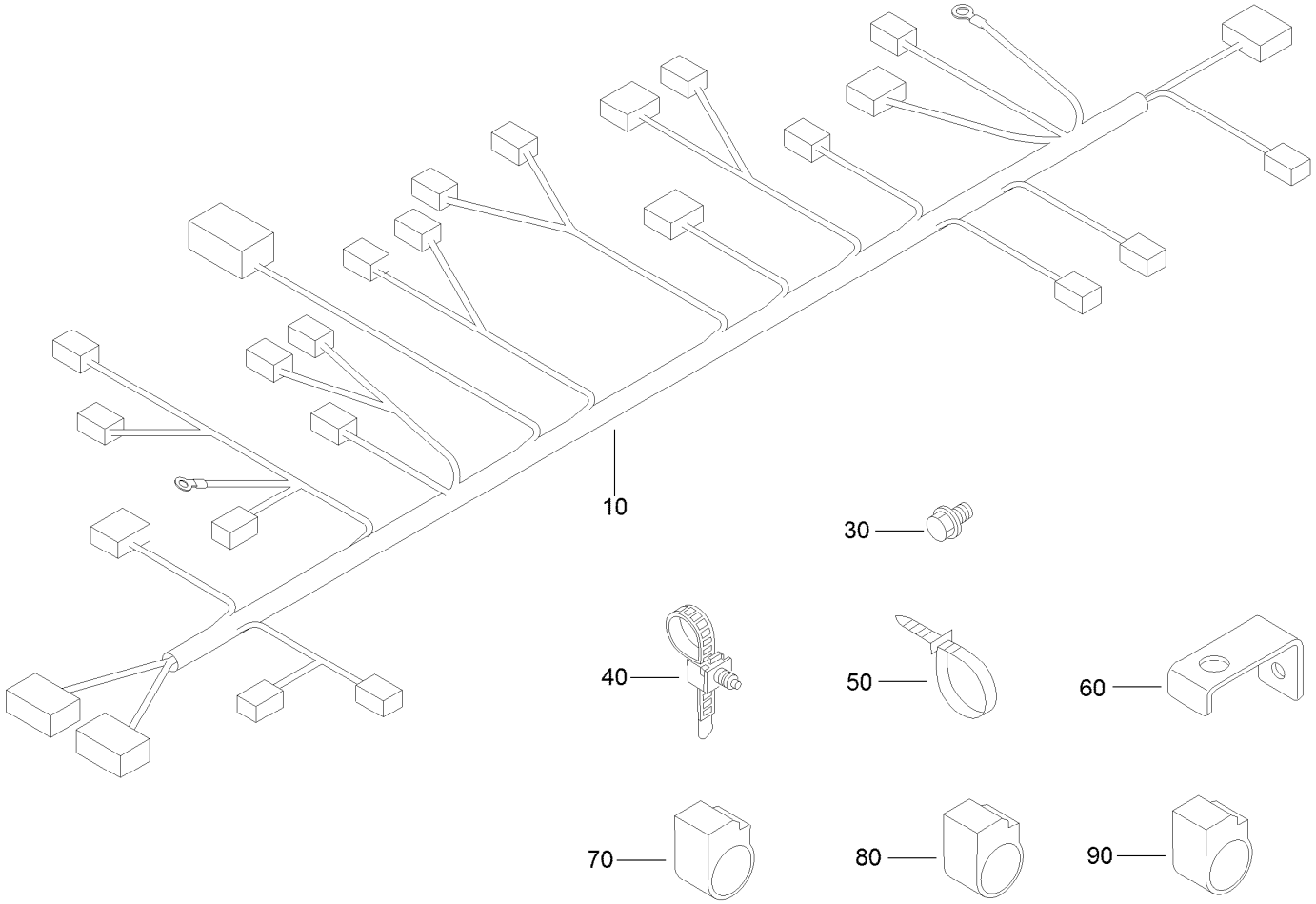


# Wire Harness Assembly

| *Ref.* | *Part Number* | *Qty.* | *Description* |
|---|---|---|---|
| 10 | 127-0450 | 1 | Wire Harness ASM |
| 30 | 115-8504 | 1 | Bolt-Flange |
| 40 | 127-0515 | 1 | Clamp |
| 50 | 127-0447 | 4 | Band-Cord |
| 60 | 127-0497 | 1 | Bracket-Harness |
| 70 | 127-0514 | 1 | Clamp |
| 80 | 127-0513 | 2 | Clamp |
| 90 | 127-0512 | 1 | Clamp |

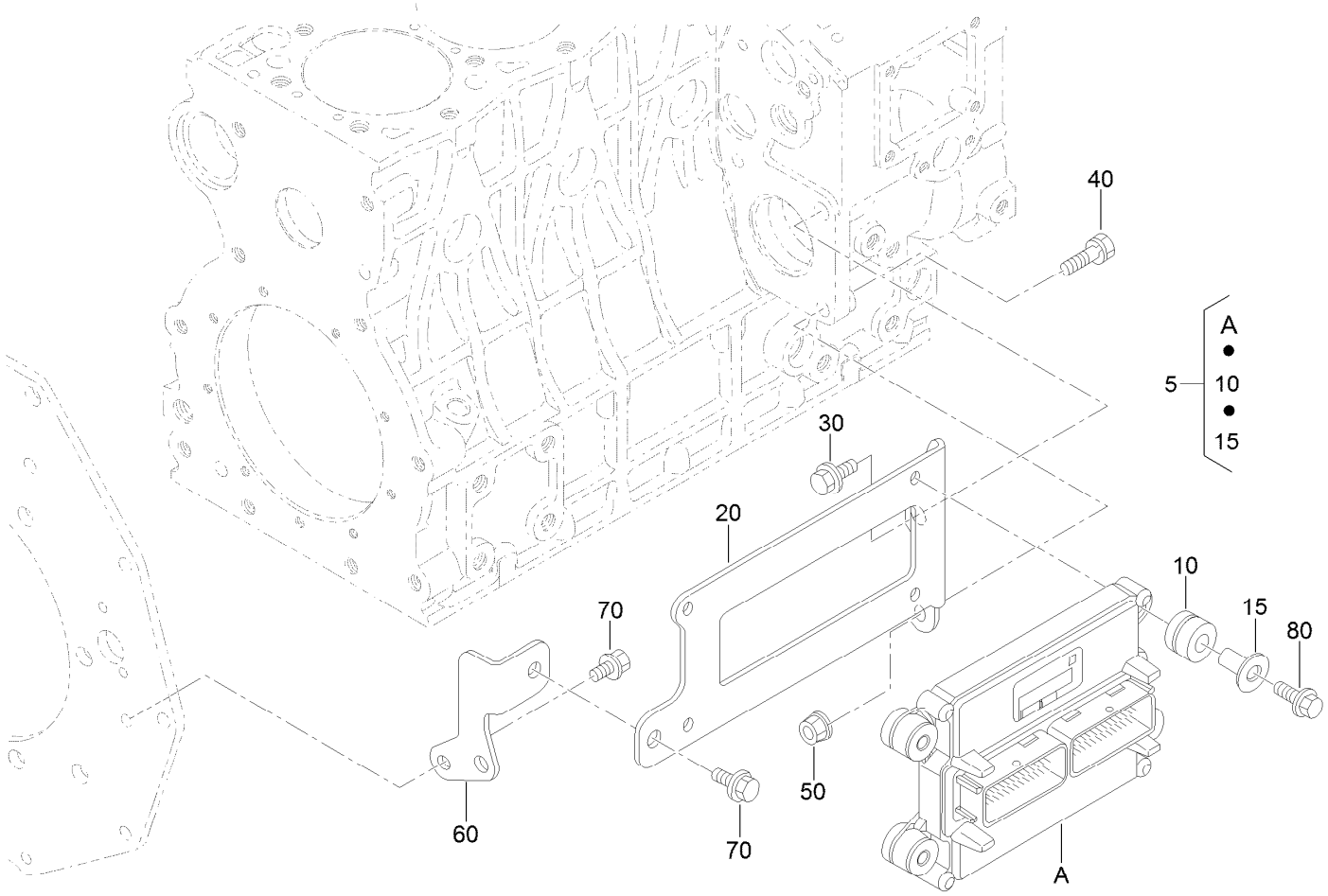


# Electronic Control Unit Assembly

| *Ref.* | *Part Number* | *Qty.* | *Description* |
|---|---|---|---|
| 5 | 133-2789 | 1 | Electronic Control Unit ASM |
| 10 | 127-0501 | 4 | Rubber-Cushion |
| 15 | 127-0500 | 4 | Spacer (E C U) |
| 20 | 127-0502 | 1 | Stay-E C M |
| 30 | 127-0406 | 1 | Bolt-Flange |
| 40 | 98-7697 | 1 | Bolt |
| 50 | 112-2492 | 1 | Nut-Flange |
| 60 | 127-0503 | 1 | Stay-E C M |
| 70 | 115-8504 | 2 | Bolt-Flange |
| 80 | 125-9094 | 4 | Bolt-Flange |

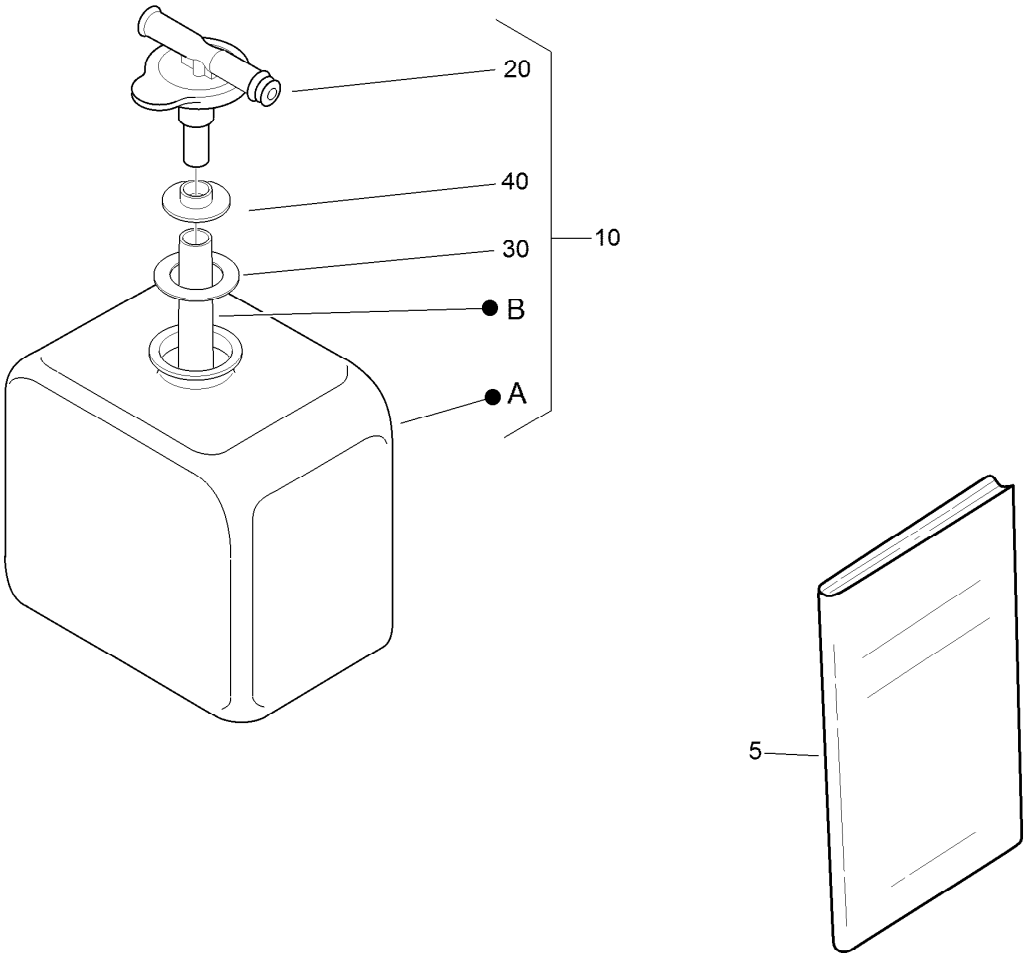


# Miscellaneous Engine Parts

| *Ref.* | *Part Number* | *Qty.* | *Description* |
|---|---|---|---|
| 5 | 136-2287 | 1 | Manual-Owners |
| 10 | 108-0638 | 1 | Bottle-Overflow |
| 20 | 105-3754 | 1 | Cap |
| 30 | 105-3755 | 1 | Gasket |
| 40 | 105-3756 | 1 | Plate |

# Attachments and Accessories

## For 41394 Multi Pro 5800-G Turf Sprayer with ExcelaRate Spray System

| Product Name | Model/Part |
|---|---|
| Premium All Season Hydraulic Fluid (55 Gallon Drum) | 108-1177 |
| Premium All Season Hydraulic Fluid (5 Gallon Pail) | 108-1178 |
| Premium Heavy Duty All Season Gear Lube (Pail) | 108-1188 |
| Premium All Purpose Grease (Tube) | 108-1190 |
| Premium Heavy Duty All Season Gear Lube (Quart) | 108-1591 |
| Spark Arrestor | 115-2919 |
| Tire | 119-6021 |
| Beacon Kit | 120-8505 |
| License Plate Kit | 120-8506 |
| Covered Boom Spring Upgrade Kit | 120-8508 |
| Premium Engine Oil 10w30 (55 Gal) | 121-6392 |
| Premium Engine Oil 10w30 (5 Gallon Pail) | 121-6393 |
| Wheel And Tire Asm | 127-1100 |
| Lance Suction Assembly | 127-9826 |
| Low Flow Kit | 130-7258 |
| Ultra Sonic Boom Finishing Kit | 130-8229 |
| Right Hand Step Kit | 130-8230 |
| Left Hand Step Kit | 130-8231 |
| Pivoting Hose Reel Finishing Kit, 2014 and Before Multi-Pro 5800 Turf Sprayer | 131-3291 |
| Pump Head Kit | 133-2898 |
| Finishing Kit, Foam Marker for Serial Number 315000001 and After Multi Pro 5800 Turf Sprayer | 136-0458 |
| Rear Work Light Kit | 41010 |
| Single Nozzle Kit | 41023 |
| Hand Spray Wand Kit | 41118 |
| Pro Foam Concentrate (4 x 1 Gallon) | 41157 |
| Ultra Sonic Boom Leveling Kit | 41219 |
| Foam Marker Kit, Serial number 400000000 and After Multi Pro 1750, 5800, and WM Turf Sprayer | 41249 |
| Drift Reduction Boom Shroud Kit | 41602 |
| Pro-Foam | 41607 |
| EU Compliance Kit | 41608 |
| Tank Rinse Kit | 41614 |
| Pivoting Hose Reel Kit | 41621 |
| Eductor Kit | 41622 |
| GeoLink Precision Spray System | 41623 |
| CDMA RTK Correction Modem Kit, GeoLink Precision Spray System | 41624 |
| GSM RTK Correction Modem Kit, GeoLink Precision Spray System | 41625 |
| GeoLink Reference Antenna Kit | 41626 |
| Road Light / Homologation Kit | 41628 |
| X25 GeoLink Precision Spray System Kit, Serial Number 315000001 and After Multi Pro 1750 or 5800 Turf Sprayer | 41630 |
| GeoLink Spray System Finishing Kit, 2016 and After Multi Pro 5800 Turf Sprayer | 41632 |

TORO®

Count on it.