Form No. 3425-351 Rev A

TORO®

Count on it.

Parts Catalog

TimeCutter® HD MyRide 48in

Riding Mower

Model No. 75210—Serial No. 404314000 and Up

Register at www.Toro.com.
Original Instructions (EN)

3425-351 A

Ordering Replacement Parts

To order replacement parts, please supply the part number, the quantity, and the description of each part desired.

Understanding Reference Numbers

Each identified part in an illustration has a reference number. The reference number for a part also appears in the parts list, along with other information about the part.

This catalog uses two special reference number formats, one to indicate parts in a service assembly and another to indicate the quantity of a given part in an illustration.

Service Assembly Reference Numbers

Parts in service assemblies have reference numbers in the form a:b. The a represents the reference number of the entire service assembly and the b represents a sequential number unique to each part within the service assembly.

For example, a wheel assembly might be identified by reference number 6, the tire by 6:1, the valve by 6:2, and the wheel by 6:3. When you order the assembly identified by reference number 6, you receive all parts identified by reference numbers 6:1,6:2, and 6:3. However, you may also order any part individually. Reference numbers of this type appear in illustration and in parts lists.

Reference Numbers Indicating Quantity

In an illustration, if a reference number indicates more than one part, the reference number has the form nX y. The n represents the quantity of the part, the X is the multiplication symbol, and the y represents the reference number.

For example, in an illustration, the reference number 2X 37 means that two of the parts identified by reference number 37 are indicated.

Contents

Frame Assembly 4
Deck Lift Assembly 6
Caster Fork Assembly 8
Hydro Transmission Assembly 10
LH Transaxle Assembly No. 133-4420 12
RH Transaxle Assembly No. 133-4421 14
Parking Brake Assembly 16
Rear Tire and Wheel Assembly 18
Seat Pan Assembly 20
Seat Assembly No. 139-2367 22
Motion Control Assembly 24
Engine and Muffler Assembly 26
Body Styling and Fuel Tank Assembly 28
Fuel Tank Assembly No. 133-4484 30
Electrical Assembly 32
Deck Assembly 34
Deck Decal Assembly No. 133-7066 36
Model Specific Decal Assembly 38
Maintenance, HOC and Smart Speed Decal Assembly 40
Clutch Assembly 42
Attachments and Accessories 44

© 2019—The Toro® Company
8111 Lyndale Avenue South
Bloomington, MN 55420

Contact us at www.Toro.com.
Printed in the USA.
All Rights Reserved

Frame Assembly

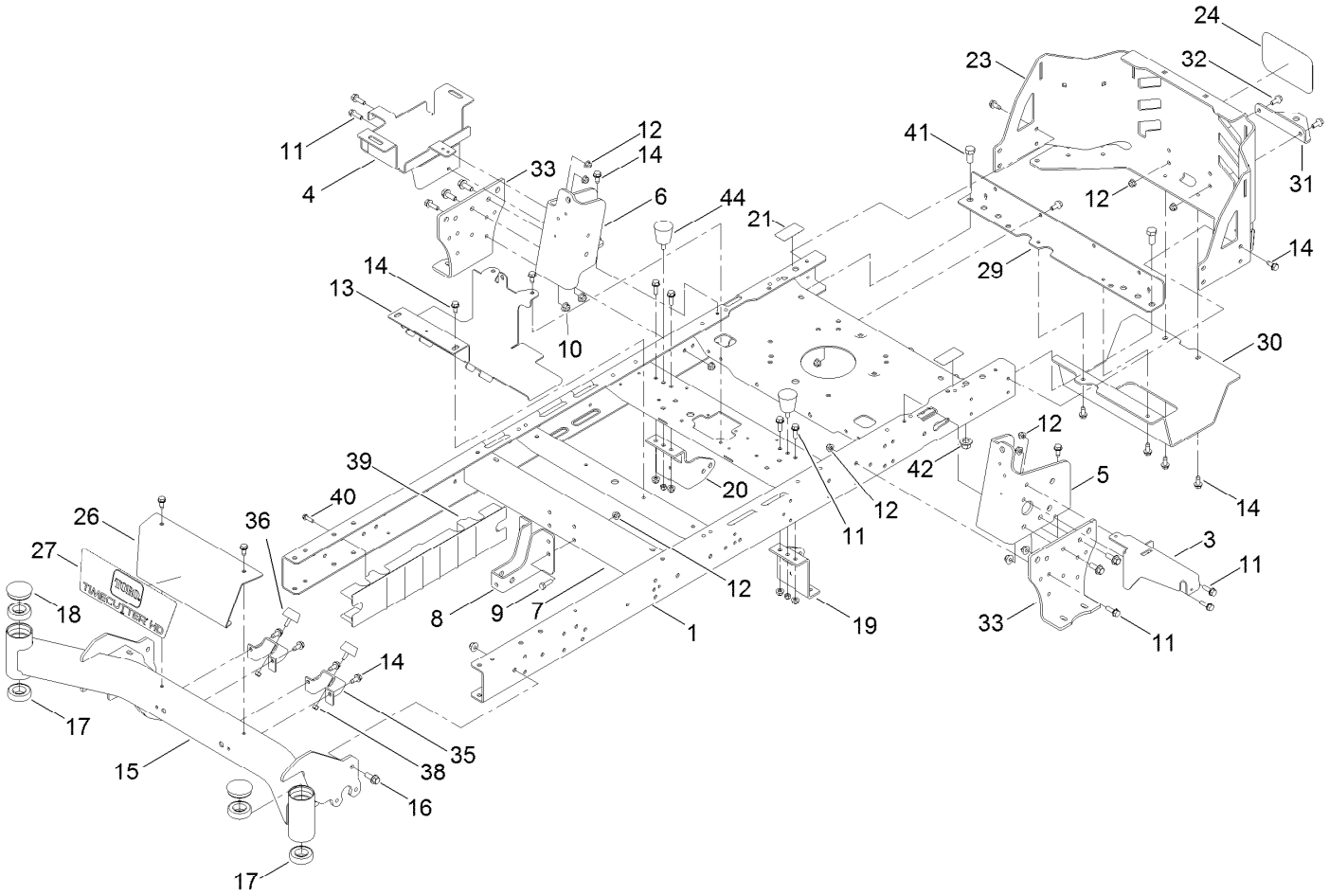

Frame Assembly (continued)

Ref.	Part Number	Qty.	Description
1	137-7023-01	1	Frame ASM
3	133-7051-03	1	Bracket-Support, Pod (LH)
4	136-4185-03	1	Tray-Battery
5	137-5068-01	1	Bracket-Mounting, LH
6	137-5069-01	1	Bracket-Mounting, RH
7	133-4413-01	1	Brace-Cross, Lower
8	137-7022-01	1	Bracket-Mount Damper, Lower
9	322-5	4	Screw-HH
10	104-8301	10	Nut-HF, NI
11	3234-29	20	Screw-HHF
12	104-8300	30	Nut-HF, NI
13	133-4485-03	1	Bracket-Mount
14	32144-70	26	Screw-HWHTF
15	133-4310-01	1	Axle-Front
16	3234-42	10	Screw-HHF
17	109-3678	4	Bearing-Ball
18	138-7200	2	Cap-Grease
19	137-7021-01	1	Mount-Hydro, Front (Left)
20	137-7020-01	1	Mount-Hydro, Front (Right)
21	121-2989	2	Decal-Bypass
23	133-4431-03	1	Guard-Engine
24	99-4693	1	Decal
26	133-9345-01	1	Plate-Front
27	136-7472	1	Decal-Timecutter HD
29	137-7016-01	1	Crossmember-Rear, Wide
30	133-4429-03	1	Guard-Muffler
31	117-1232-03	1	Bracket-Hitch
32	3234-47	6	Screw-HHF
33	133-1201-03	2	Mount-Hydro
35	133-4414-01	2	Bracket-Stop, Bump
36	131-8834	2	Bumper
38	3296-42	4	Nut-Lock, NI
39	137-5093	2	Guard-Rail
40	46-8091	6	Screw-HWH
41	325-4	2	Screw-HH
42	99-5107	2	Nut-Lock
44	132-5058	2	Bumper-Rubber

Deck Lift Assembly

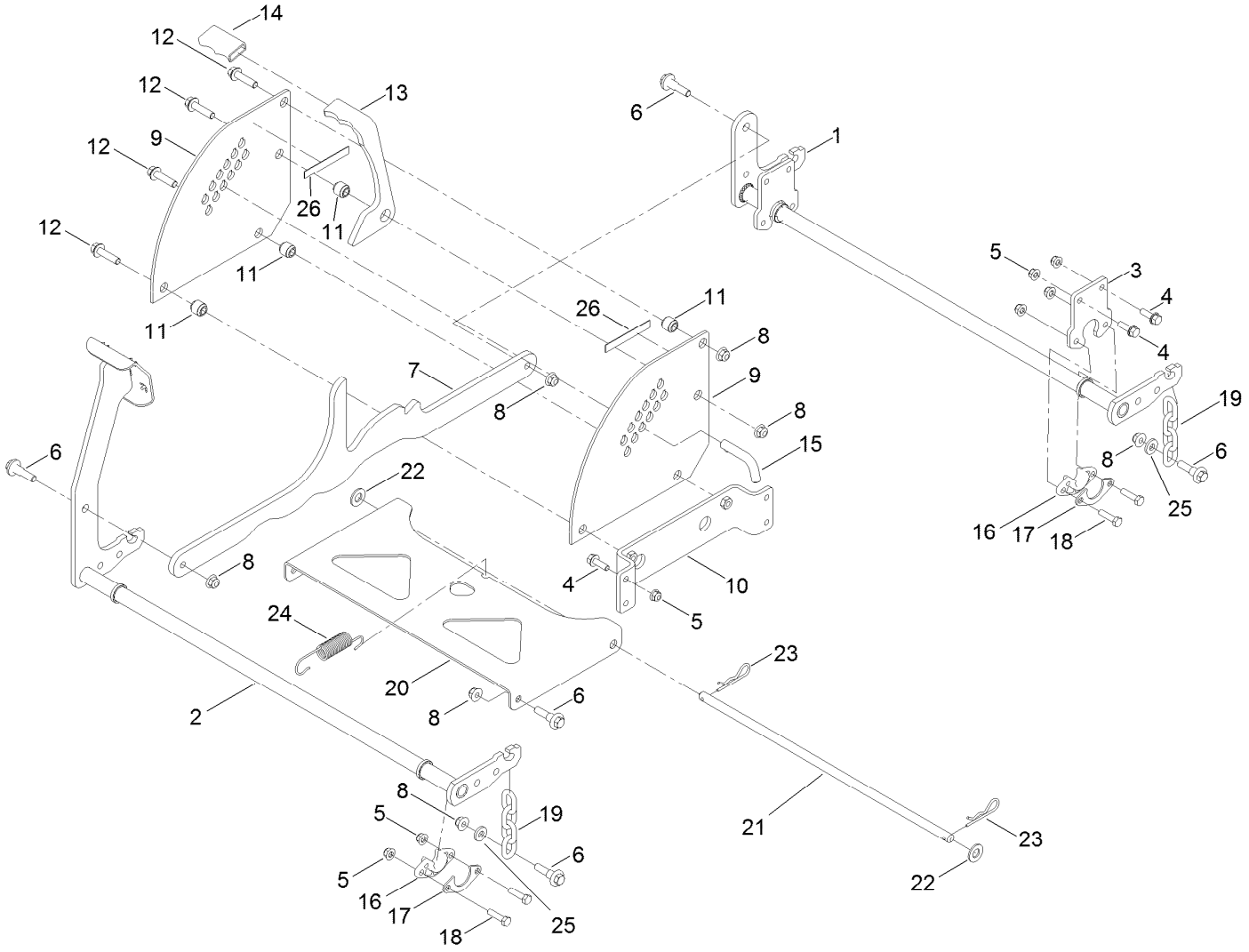

Deck Lift Assembly (continued)

Ref.	Part Number	Qty.	Description
1	137-2020-03	1	Pivot-Rear
2	133-4430-03	1	Pivot-Front
3	137-2021-03	2	Plate
4	3234-29	8	Screw-HHF
5	104-8300	16	Nut-HF, NI
6	130-0742	8	Bolt-Shoulder
7	127-3390-03	1	Link-HOC
8	104-8301	10	Nut-HF, NI
9	127-3389-03	2	Plate-Deck, Lift
10	133-7049	1	Plate-Lift
11	138-7201	4	Spacer-Double Step
12	114-4681	4	Screw-HHF
13	138-7202	1	Transport Lock-HOC
14	116-4312	1	Grip-Flat
15	138-7203	1	Pin-HOC
16	115-5065	4	Bushing-Flange
17	138-7204	4	Gusset-Deck Lift
18	322-6	8	Screw-HH
19	138-7205	4	Chain-Decklift, 4-Link
20	133-4311-01	1	Pan-Pivot, Deck
21	133-7071	1	Rod-Pivot, Deck
22	3256-26	2	Washer-Flat
23	1-806005	2	Pin-Cotter
24	138-7206	1	Spring-Extension
25	138-7207	4	Spacer-Hub, Blower
26	130-0734	2	Pad-Rubber

Caster Fork Assembly

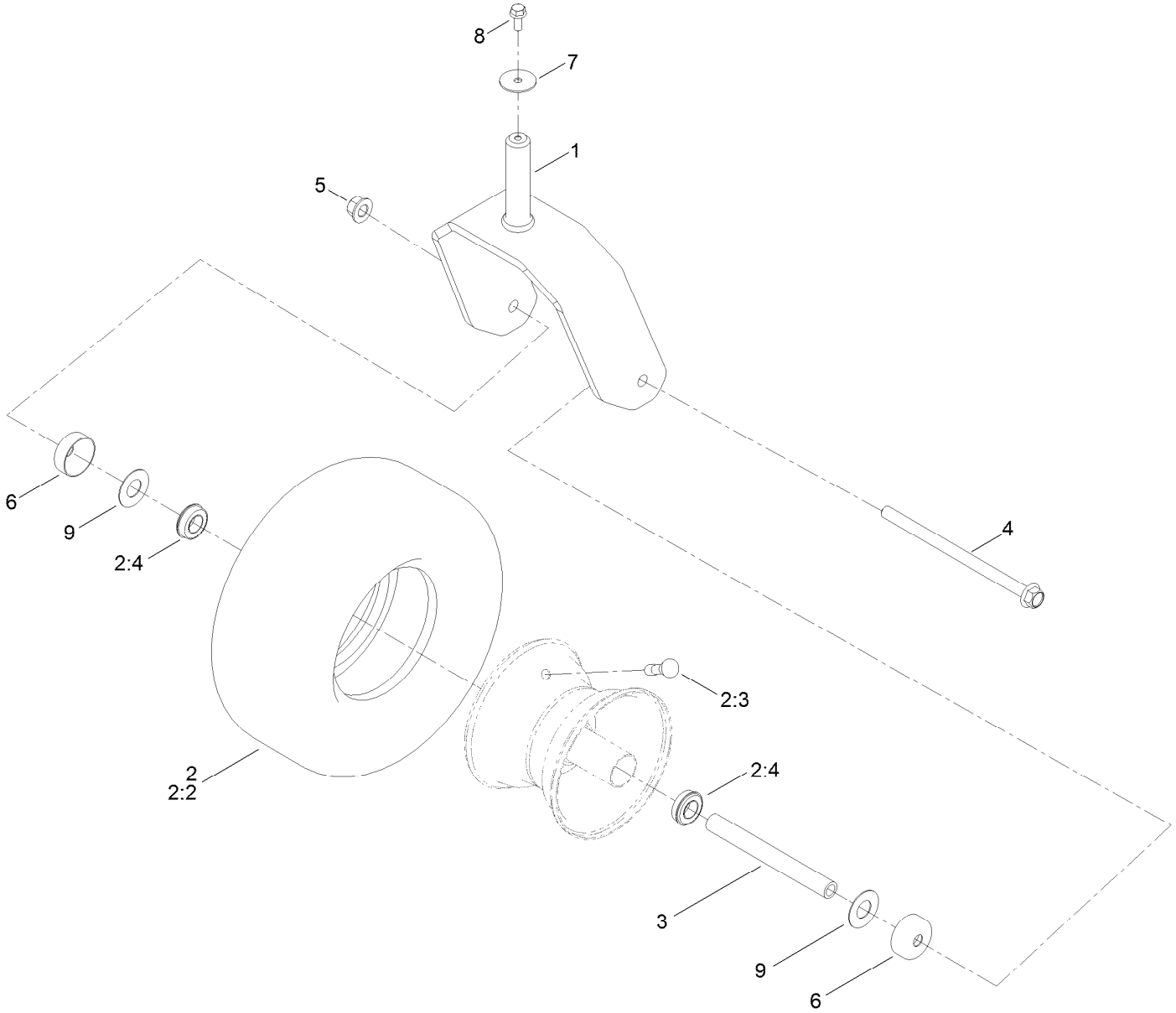

Caster Fork Assembly (continued)

Ref.	Part Number	Qty.	Description
1	126-4312-01	2	Fork-Caster
2	133-4428	2	Tire And Wheel ASM
2:2	125-5581	1	Tire
2:3	232-27	1	Stem-Valve
2:4	136-4190	2	Bearing
2:99	232-46	1	Tube-Inner ●
3	133-4487	2	Spanner-Wheel
4	126-5389	2	Screw-HHF
5	99-5107	2	Nut-Lock
6	138-7208	4	Guard-Seal
7	3256-68	2	Washer-Flat
8	3234-47	2	Screw-HHF
9	136-5590	4	Washer

● Not illustrated

Hydro Transmission Assembly

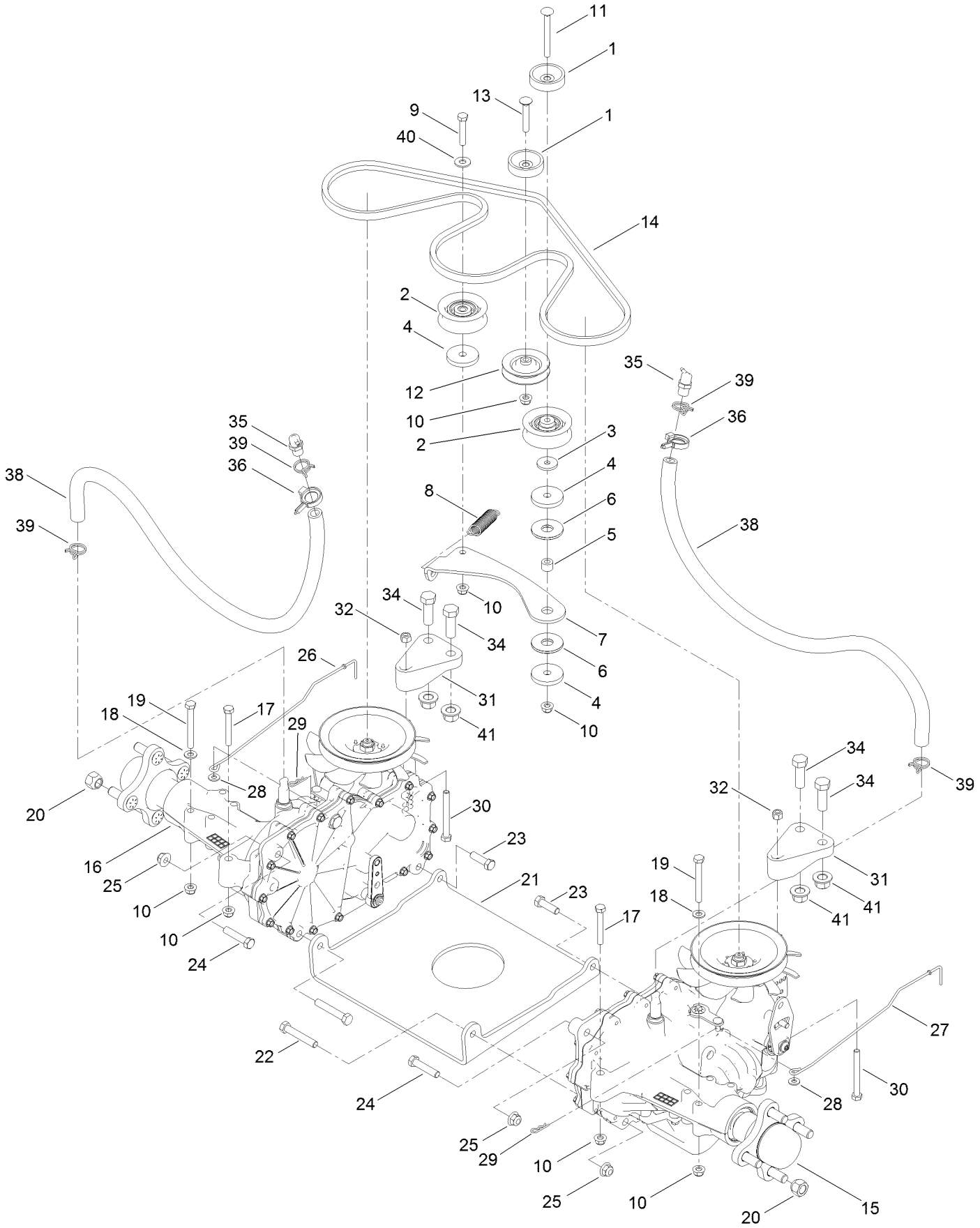

Hydro Transmission Assembly (continued)

Ref.	Part Number	Qty.	Description
1	119-3353	2	Spacer
2	138-7597	2	Pulley-Idler, Flat
3	1-613235	1	Washer
4	110-9981	3	Washer-Plain
5	138-7209	1	Bushing
6	114-0463	2	Washer-Friction, Composite
7	133-4423	1	Arm-Idler
8	137-7040	1	Spring-Return, Pedal
9	322-9	1	Screw-HH
10	104-8300	9	Nut-HF, NI
11	119-9784	1	Screw-CARR
12	119-8822	1	Pulley-Idler
13	3230-6	1	Bolt-CARR
14	133-4371	1	V-Belt
15	133-4420	1	LH Hydro Transmission ASM
16	133-4421	1	RH Hydro Transmission ASM
17	322-11	2	Screw-HH
18	3256-23	6	Washer-Plain
19	322-13	4	Screw-HH
20	242-50	8	Nut-Lug
21	130-0718-01	1	Plate-Cross, Hydro
22	323-11	2	Screw-HH
23	323-7	2	Screw-HH
24	323-9	2	Screw-HH
25	104-8301	6	Nut-HF, NI
26	133-4304	1	Rod-Bypass, RH
27	133-4305	1	Rod-Bypass, LH
28	3256-22	2	Washer-Flat
29	3290-307	2	Pin-Cotter
30	322-14	2	Screw-HH
31	133-1247	2	Support-Hydro, Rear
32	3296-29	2	Nut-Lock, NI
34	325-6	4	Screw-HH
35	136-4183	2	Breather Kit
36	105-1853	2	Clamp-Hose
38	136-4182	2	Hose-Hydro
39	138-7211	4	Clamp-Hose
40	3256-3	1	Washer-Flat
41	99-5107	4	Nut-Lock

LH Transaxle Assembly No. 133-4420

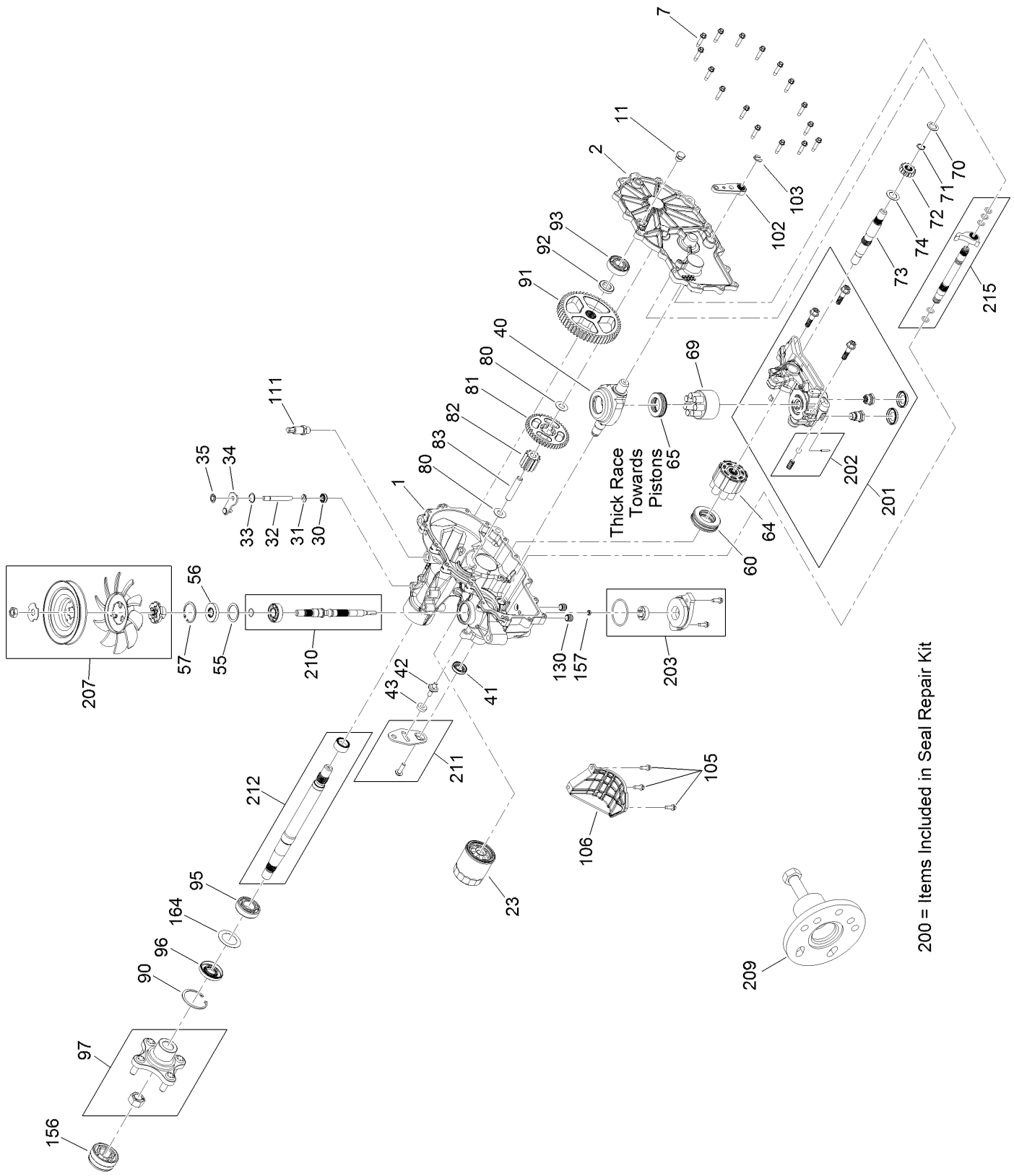

LH Transaxle Assembly No. 133-4420 (continued)

Ref.	Part Number	Qty.	Description
1	117-5357	1	RH Main Housing Kit
2	117-5358	1	RH Housing Side Kit
7	117-5359	16	Screw-HHF
11	135-1140	1	Plug-Straight
23	109-3321	1	Element-Oil Filter, HYD
30	106-8676	1	Seal-Lip
31	106-8677	1	Ring-Retaining, External
32	114-1685	1	Rod-Bypass
33	106-8679	1	Ring-Retaining, Internal
34	112-9852	1	Arm-Bypass
35	106-8681	1	Ring-Retaining, External
40	104-5304	1	Swashplate-Trunnion
41	104-5313	1	Seal-Lip
42	104-2116	1	Stud
43	112-9853	1	Puck-Friction
55	104-5308	1	Spacer
56	104-5310	1	Seal-Lip
57	104-5309	1	Ring-Retaining
60	112-4154	1	Bearing-Thrust
64	114-1689	1	Motor Cylinder Block Kit
65	94-6922	1	Bearing-Thrust
69	110-8561	1	Pump Block ASM
70	104-5339	1	Washer-Flat
71	104-5340	1	Ring-Retaining
72	131-0905	1	Gear-14T
73	114-1691	1	Shaft-Motor
74	104-5360	1	Washer
80	119-5541	2	Washer
81	114-1692	1	Gear-45T
82	120-7974	1	Gear-11T
83	104-5329	1	Pin-Jackshaft
90	104-2169	1	Ring-Retaining
91	114-1694	1	Gear-54T
92	120-7975	1	Spacer
93	137-2004	1	Bearing Kit
95	109-8110	1	Input Bearing Kit
96	130-8478	1	Seal-Lip
97	109-5939	1	Hub Kit
102	125-0021	1	Handle-Brake
103	131-0906	1	Ring-Retaining, EXT
105	104-2120	3	Screw
106	120-7981	1	Guard-Filter, RH
111	109-3278	1	Adapter-Straight
130	126-3251	2	Tube-Charge
156	115-5057	1	Cover-Nut, Axle
157	130-8486	1	Seal-Gerotor
164	121-5745	1	Spacer
200	109-3537	1	Seal Kit
201	137-2005	1	RH Charge Center Section Kit
202	114-8464	1	Charge Relief Kit
203	114-8465	1	Charge Kit
207	137-2006	1	Fan Pulley Kit
209	114-8467	1	Puller-Hub, 4 Bolt
210	117-5361	1	Input Shaft Kit
211	117-5362	1	Control Arm Kit
212	114-8470	1	Axle Shaft Kit
215	137-2007	1	Brake Shaft Kit

RH Transaxle Assembly No. 133-4421

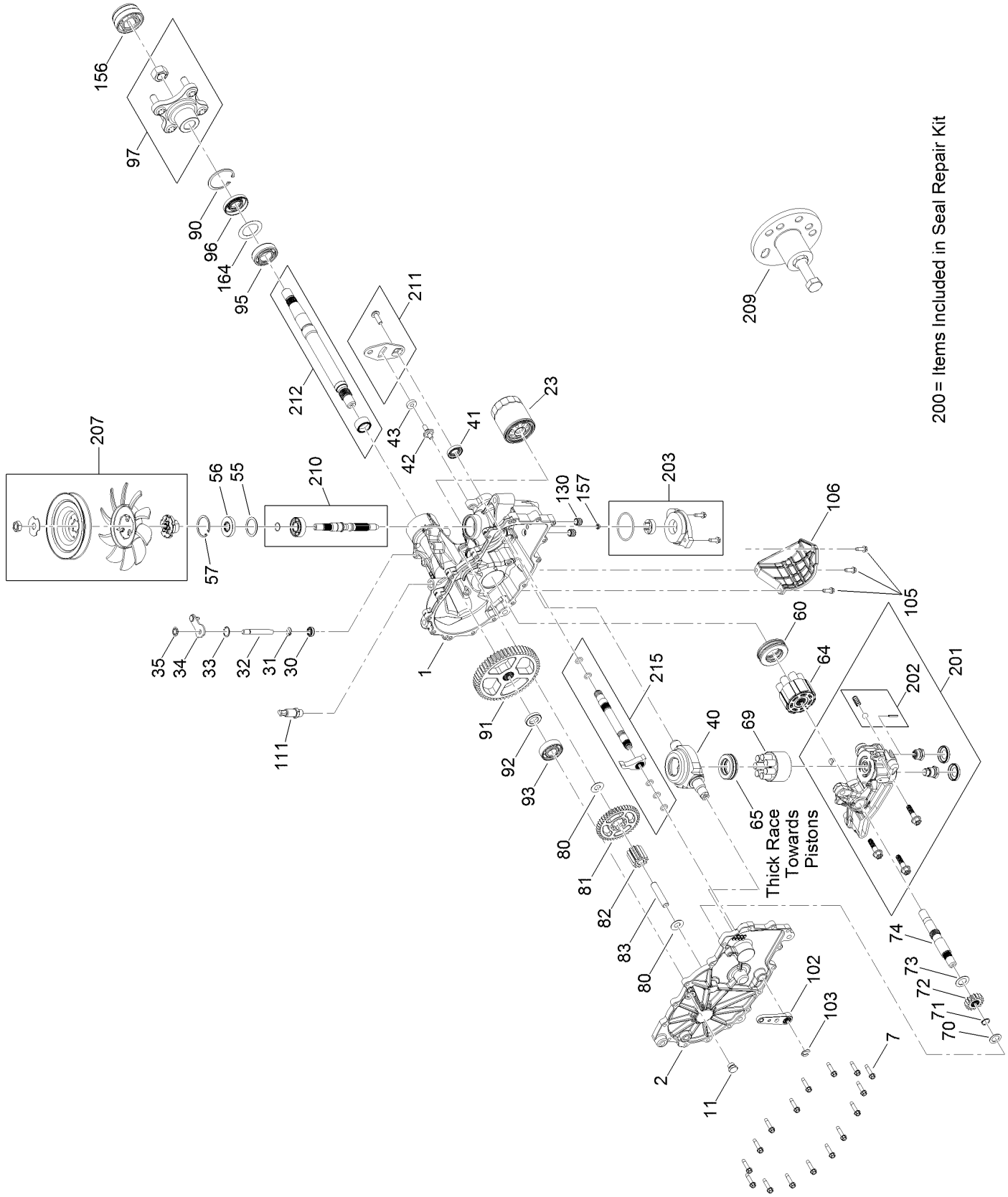

RH Transaxle Assembly No. 133-4421 (continued)

Ref.	Part Number	Qty.	Description
1	114-8471	1	LH Main Housing Kit
2	114-8472	1	LH Side Cover Kit
7	117-5359	16	Screw-HHF
11	135-1140	1	Plug-Straight
23	109-3321	1	Element-Oil Filter, HYD
30	106-8676	1	Seal-Lip
31	106-8677	1	Ring-Retaining, External
32	114-1685	1	Rod-Bypass
33	106-8679	1	Ring-Retaining, Internal
34	107-2490	1	Arm-Bypass
35	106-8681	1	Ring-Retaining, External
40	104-5304	1	Swashplate-Trunnion
41	104-5313	1	Seal-Lip
42	104-2116	1	Stud
43	112-9853	1	Puck-Friction
55	104-5308	1	Spacer
56	104-5310	1	Seal-Lip
57	104-5309	1	Ring-Retaining
60	112-4154	1	Bearing-Thrust
64	114-1689	1	Motor Cylinder Block Kit
65	94-6922	1	Bearing-Thrust
69	110-8561	1	Pump Block ASM
70	104-5339	1	Washer-Flat
71	104-5340	1	Ring-Retaining
72	131-0905	1	Gear-14T
73	114-1691	1	Shaft-Motor
74	104-5360	1	Washer
80	119-5541	2	Washer
81	114-1692	1	Gear-45T
82	120-7974	1	Gear-11T
83	104-5329	1	Pin-Jackshaft
90	104-2169	1	Ring-Retaining
91	114-1694	1	Gear-54T
92	120-7975	1	Spacer
93	137-2004	1	Bearing Kit
95	109-8110	1	Input Bearing Kit
96	130-8478	1	Seal-Lip
97	109-5939	1	Hub Kit
102	125-0021	1	Handle-Brake
103	131-0906	1	Ring-Retaining, EXT
105	104-2120	3	Screw
106	120-7979	1	Guard-Filter, LH
111	109-3278	1	Adapter-Straight
130	126-3251	2	Tube-Charge
156	115-5057	1	Cover-Nut, Axle
157	130-8486	1	Seal-Gerotor
164	121-5745	1	Spacer
200	109-3537	1	Seal Kit
201	137-2012	1	LH Charge Center Section Kit
202	114-8464	1	Charge Relief Kit
203	114-8465	1	Charge Kit
207	137-2006	1	Fan Pulley Kit
209	114-8467	1	Puller-Hub, 4 Bolt
210	117-5361	1	Input Shaft Kit
211	117-5362	1	Control Arm Kit
212	114-8470	1	Axle Shaft Kit
215	137-2013	1	Brake Shaft Kit

Parking Brake Assembly

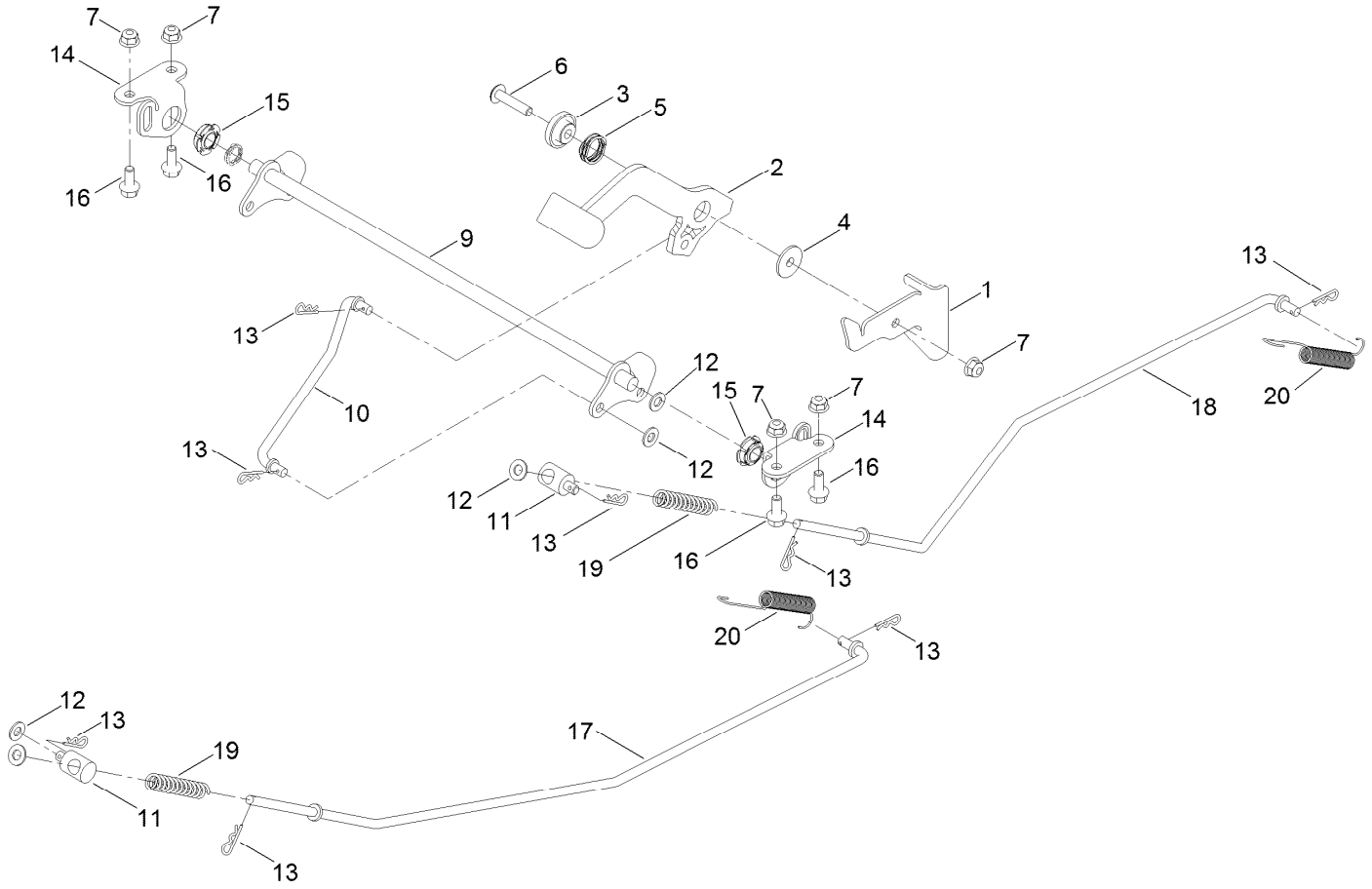

Parking Brake Assembly (continued)

Ref.	Part Number	Qty.	Description
1	136-5554	1	Detent-Brake
2	136-7476	1	Lever-Brake
3	136-5648	1	Bushing-Flange
4	136-5647	1	Bushing-Brake, Flanged
5	120-5116	1	Washer-Wave
6	126-7439	1	Screw-Torx
7	104-8300	5	Nut-HF, NI
9	133-9338	1	Bellcrank-Brake
10	133-9342	1	Rod-Brake, Intermediate
11	138-7212	2	Fitting-Rod
12	3256-23	5	Washer-Plain
13	3290-307	8	Pin-Cotter
14	133-9341-03	2	Plate-Support, Bellcrank
15	136-7469	2	Bearing-Spherical
16	3234-47	4	Screw-HHF
17	133-9343	1	Rod-Brake, RH
18	133-9344	1	Rod-Brake, LH
19	1-603807	2	Spring-Return, Neutral
20	110769	2	Spring-Extension

Rear Tire and Wheel Assembly

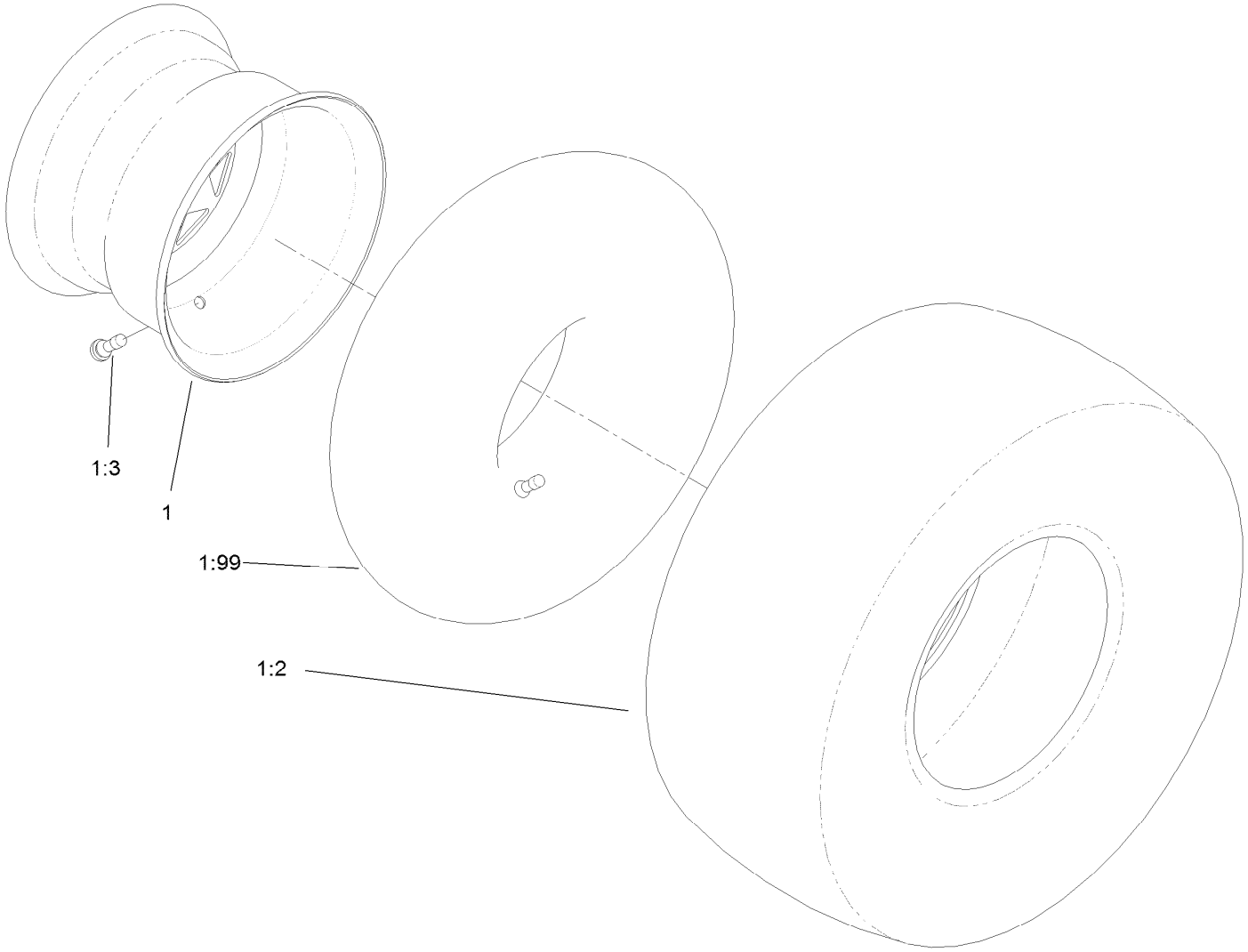

Rear Tire and Wheel Assembly (continued)

Ref.	Part Number	Qty.	Description
1	127-3449	2	Tire And Wheel ASM
1:2	125-1821	1	Tire
1:3	232-27	1	Stem-Valve
1:99	105-4070	1	Tube-Inner ●

● Optional Equipment

Seat Pan Assembly

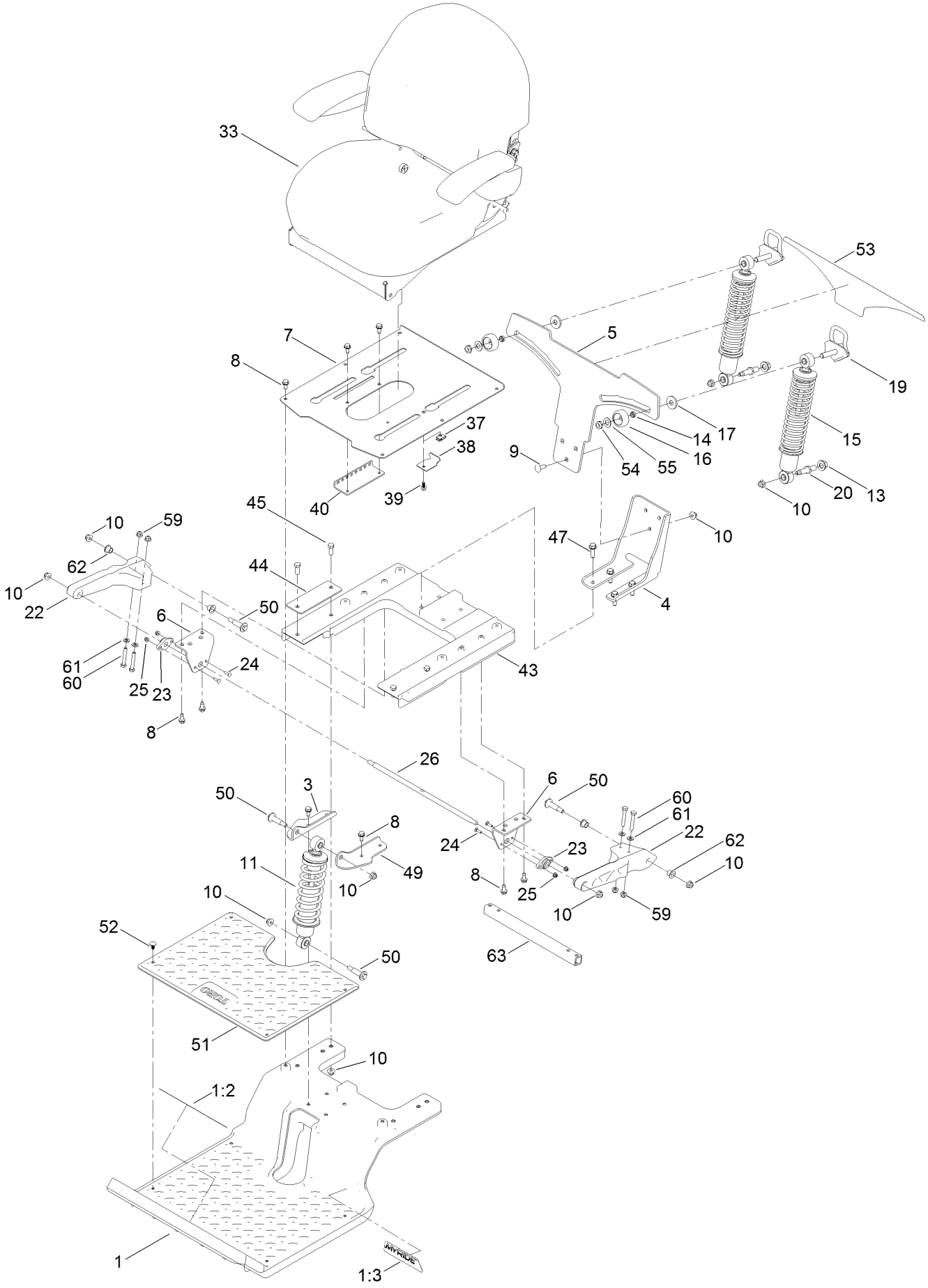

Seat Pan Assembly (continued)

Ref.	Part Number	Qty.	Description
1	136-9191	1	Subframe-Front
1:2	132-0869	1	Decal-Danger
1:3	136-7470	1	Decal
3	133-9319-03	1	Bracket-Shock Mount, Upper (RH)
4	133-4442-03	1	Bracket-Mount, Lower
5	133-4462-03	1	Bracket-Mounting, Shock
6	137-1967-03	2	Bracket-Mount, Swing Arm
7	133-7029-03	1	Pan-Seat
8	32144-70	16	Screw-HWHTF
9	3231-22	3	Screw-CARR
10	104-8301	15	Nut-HF, NI
11	133-5192	1	Shock/Spring ASM
13	99-5107	2	Nut-Lock
14	133-5109	2	Bearing-Sleeve
15	133-5193	2	Shock/Spring ASM
16	136-5636	2	Knob-Lock, Cam
17	131-4699	2	Washer-Plastic
19	133-5105	2	Cam Lock ASM
20	133-4401	2	Bolt-Shoulder
22	136-8979	2	Trailing Arm
23	127-0146	2	Bearing-Flange
24	3229-20	4	Screw-CARR
25	120-4578	4	Nut-HF
26	137-1968	1	Rod-Pivot
33	139-2367	1	Seat ASM
37	107069	1	Clip
38	138-7214	1	Bracket-Stop, Seat
39	99-6810	1	Screw-HHF
40	131-4008-03	1	Bracket-Latch, Seat
43	137-7031	1	Subframe-Rear
44	133-7089-03	2	Plate-Backer
45	323-6	4	Screw-HH
47	32144-109	4	Screw-Thd
49	133-9318-03	1	Bracket-Shock Mount, Upper (LH)
50	136-7198	4	Bolt-Shoulder
51	133-5190	1	Floormat
52	117-2382	4	Plug-Plastic
53	133-5198	1	Decal-Adjustment, Ride
54	3296-45	2	Nut-Hex
55	3-6803	2	Washer-Adjusting
59	104-8300	4	Nut-HF, NI
60	322-10	4	Screw-HH
61	3256-23	4	Washer-Plain
62	125-5239	4	Bushing-Flange
63	137-1969-03	1	Tube-Arm, Trailing

Seat Assembly No. 139-2367

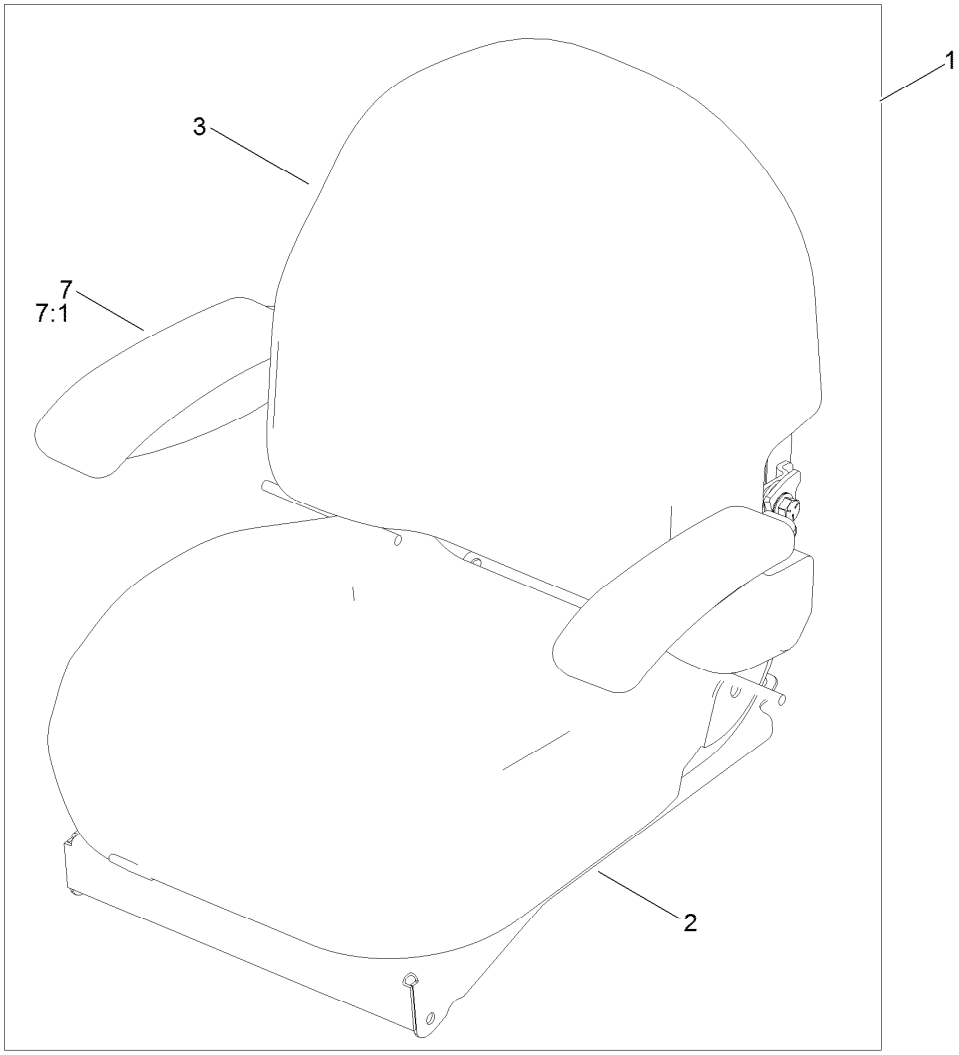

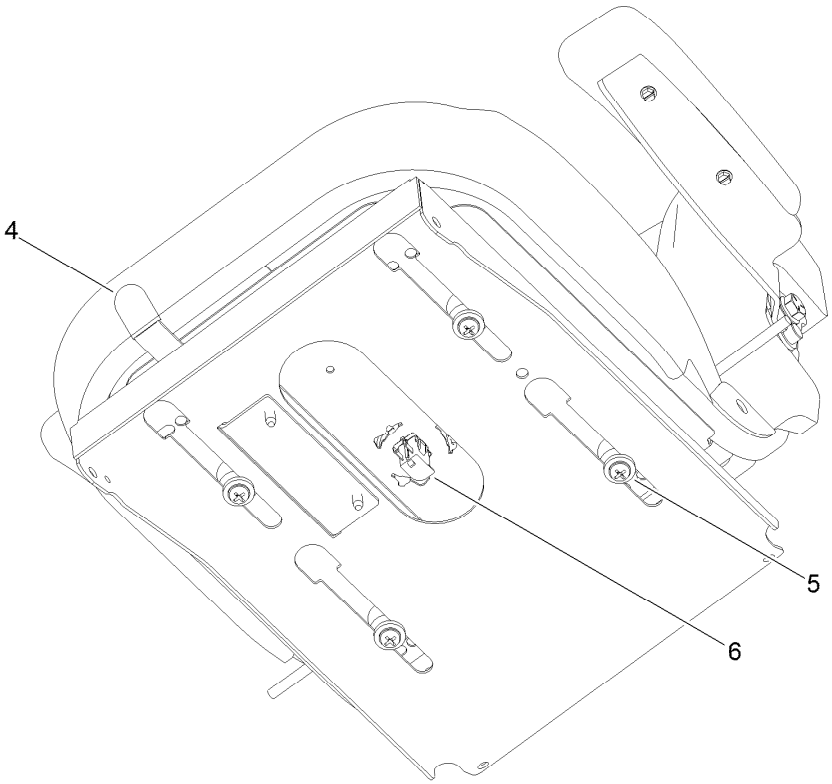

Seat Assembly No. 139-2367 (continued)

Ref.	Part Number	Qty.	Description
1	139-2374	1	Seat ASM
2	139-2649	1	Cover-Base
3	139-3297	1	Cover-Back
4	131-4153	1	Track ASM
5	131-4154	1	Bushing ASM
6	82-2190	1	Switch-Bail
7	126-2058	1	Armrest Kit
7:1	110-4163	2	Cushion-Rest, Arm

Motion Control Assembly

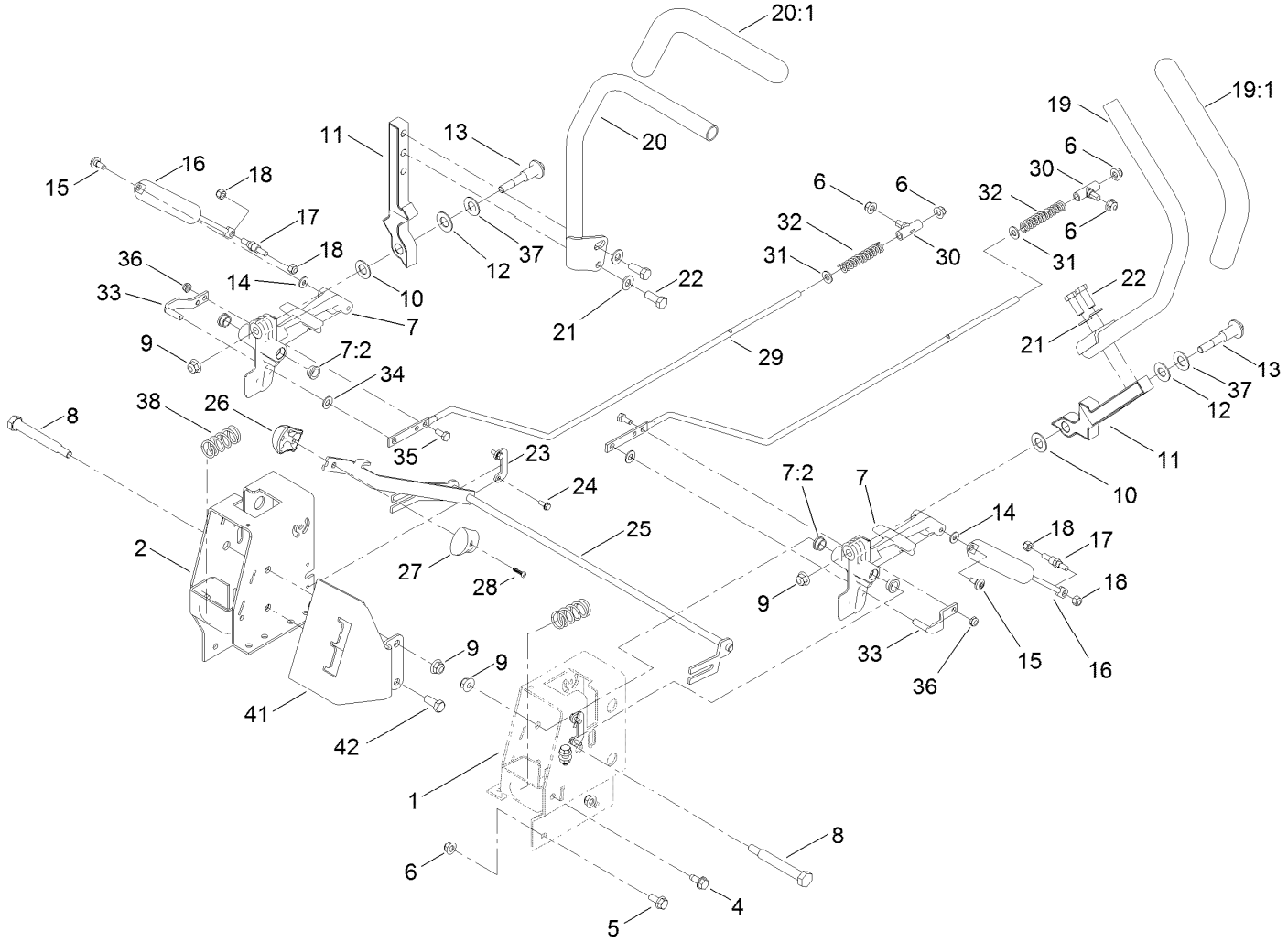

Motion Control Assembly (continued)

Ref.	Part Number	Qty.	Description
1	136-5614-03	1	Box-Control, LH
2	136-5613-03	1	Box-Control, RH
4	32144-70	2	Screw-HWHTF
5	3234-47	8	Screw-HHF
6	104-8300	12	Nut-HF, NI
7	119-3470	2	Actuator Arm ASM
7:2	256-156	2	Bushing-Flange
8	115-5099	2	Bolt-Pivot
9	104-8301	5	Nut-HF, NI
10	120-2273	2	Washer-Nylon
11	136-5570-05	2	Arm-Control
12	117-1240	2	Washer
13	117-1198	2	Bolt-Pivot
14	119-8952	2	Washer
15	120-7950	2	Screw-Shoulder
16	131-0964	2	Damper
17	138-7215	2	Stud-Damper
18	3296-42	4	Nut-Lock, NI
19	133-7055	1	Handle-Control, LH
19:1	121-0726	1	Grip
20	133-7057	1	Handle-Control, RH

Ref.	Part Number	Qty.	Description
20:1	121-0726	1	Grip
21	3256-24	4	Washer-Flat
22	323-6	4	Screw-HH
23	138-7216	2	Retainer
24	32144-1	4	Screw-Taptite
25	133-5165	1	Control-Speed
26	132-9368	1	Knob-RH
27	132-9369	1	Knob-LH
28	94-4496	1	Screw-PPH
29	138-7217	2	Rod-Hydro
30	138-7218	2	Mount-Rod, Hydro
31	3256-23	2	Washer-Plain
32	1-603807	2	Spring-Return, Neutral
33	121-1753	2	Pin-Rod, Hydro
34	93-6079	2	Spacer-Nylon
35	321-3	2	Screw-HH
36	3296-56	2	Nut-Lock, NI
37	119-8925	2	Washer-Belleville
38	138-7219	2	Spring-Return
41	136-2751-03	1	Gate-Control, Speed
42	323-5	1	Screw-HH

Engine and Muffler Assembly

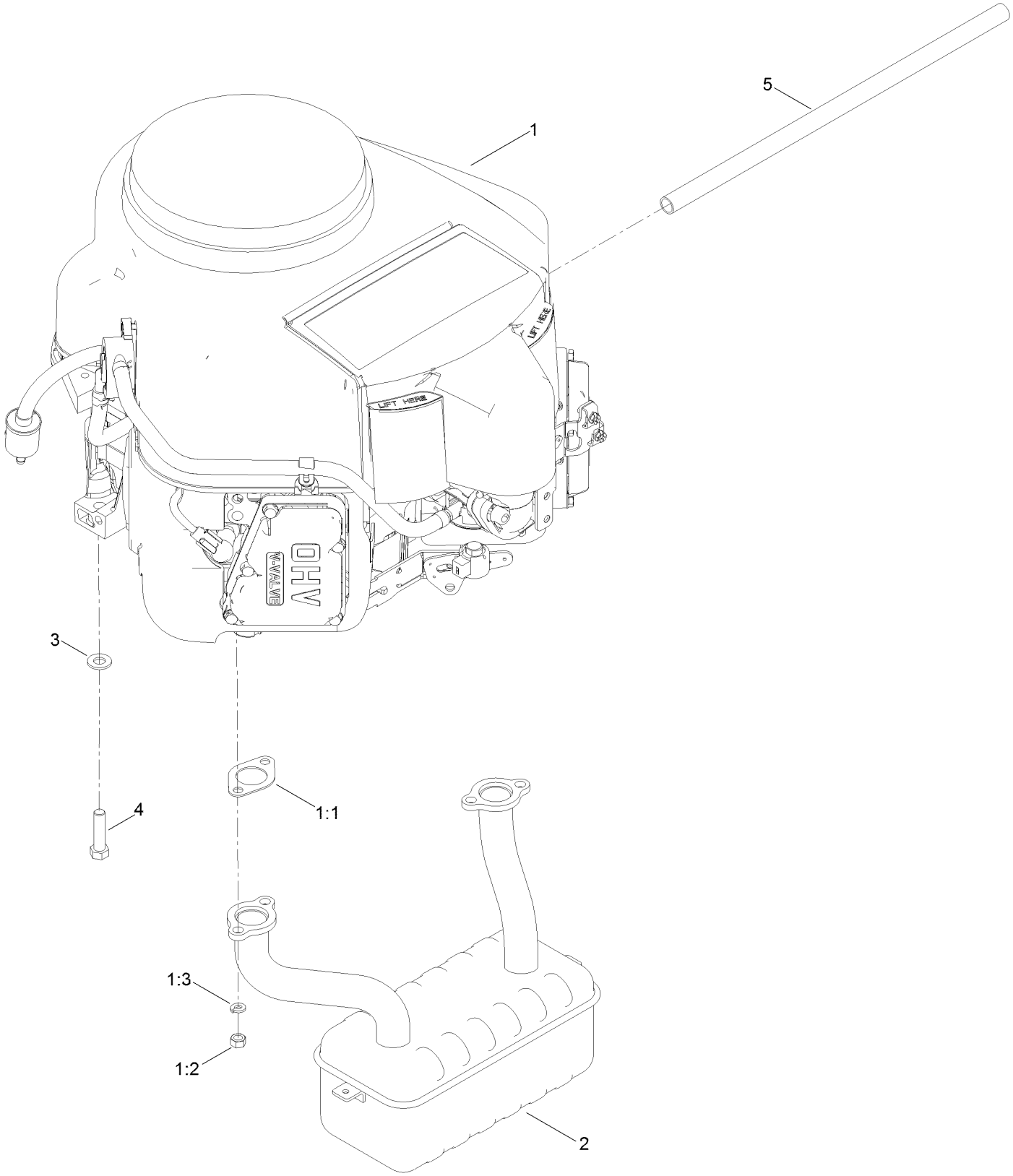

Engine and Muffler Assembly (continued)

Ref.	Part Number	Qty.	Description
1		1	Engine-Kawasaki, Fr651V-S12-R ●■
1:1	1-653313	2	Gasket-Exhaust
1:2	114-3549	4	Nut
1:3	114-3550	4	Washer-Lock
2	130-0673	1	Muffler
3	3256-24	4	Washer-Flat
4	323-50	4	Bolt-HH
5	106-7022	1	Tube-Drain, Oil

● Not serviced separately

■ Obtain parts from www.kawpowerepc.com

Body Styling and Fuel Tank Assembly

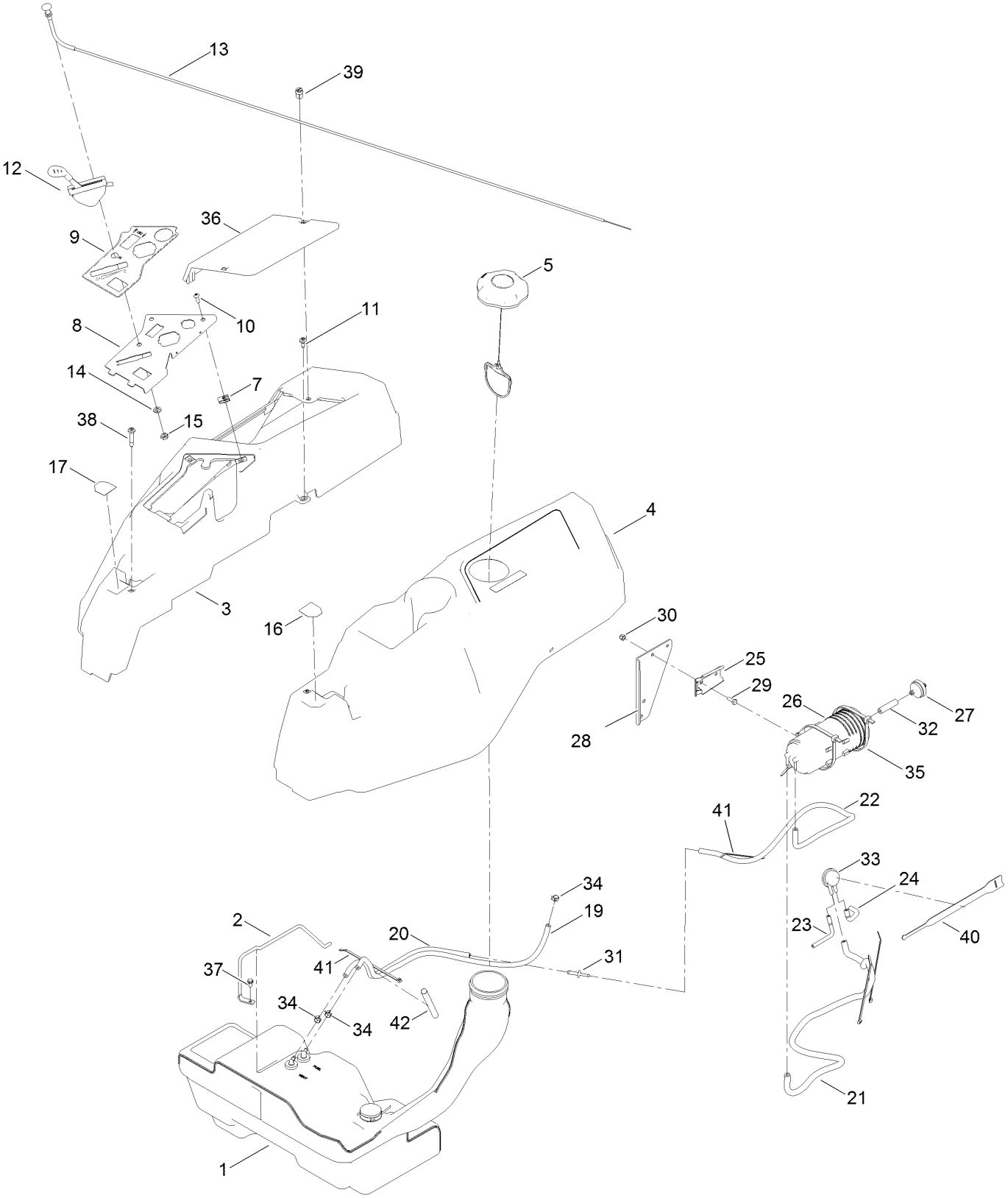

Body Styling and Fuel Tank Assembly (continued)

Ref.	Part Number	Qty.	Description
1	133-4484	1	Fuel Tank ASM
2	136-4180	1	Rod-Hold Down
3	133-9307	1	Pod-RH
4	133-9315	1	Pod-LH
5	137-4119	1	Cap-Fuel, Ratcheting
7	107069	2	Clip
8	133-9346-03	1	Panel-Control
9	133-9263	1	Decal-Control W/Choke
10	3258-166	2	Screw-PRH
11	120-7950	4	Screw-Shoulder
12	136-5622	1	Cable-Throttle
13	112-9753	1	Cable-Choke
14	3253-21	1	Washer-Lock
15	3220-3	1	Nut-HJ
16	136-4243	1	Decal-Lever, Control (LH)
17	136-4244	1	Decal-Lever, Control (RH)
19	109-0281	1	Hose-Fuel
20	110-5701	1	Hose-Fuel
21	109-0307	1	Hose-Fuel
22	136-7526	1	Hose, Fuel

Ref.	Part Number	Qty.	Description
23	119-8501	1	Hose-Vent, Formed
24	119-8502	1	Hose-Vent, Formed
25	114-0292	1	Bracket-Canister, Carbon
26	117-1221	1	Canister-Carbon, 800Cc
27	115-7854	1	Filter-Fuel, Inline
28	133-9292-03	1	Carb Canister Bracket
29	321-4	2	Screw-HH
30	3296-42	2	Nut-Lock, NI
31	117-5399	1	Adaptor-Orifice
32	99-9415	1	Hose-Fuel
33	116-2232	1	Valve-Control, Vacuum
34	2412-98	3	Clamp-Hose
35	3334-945	1	Tie-Cable
36	133-9308	1	Cover-Battery
37	32144-4	1	Screw-HWH
38	136-4195	2	Screw-Shoulder
39	121-5840	2	Fastener
40	116-2469	1	Strap-Velcro, Cable Tie
41	614249	5	Tie-Cable
42	138-2522	1	Sleeve-Fuel Line Protector

Fuel Tank Assembly No. 133-4484

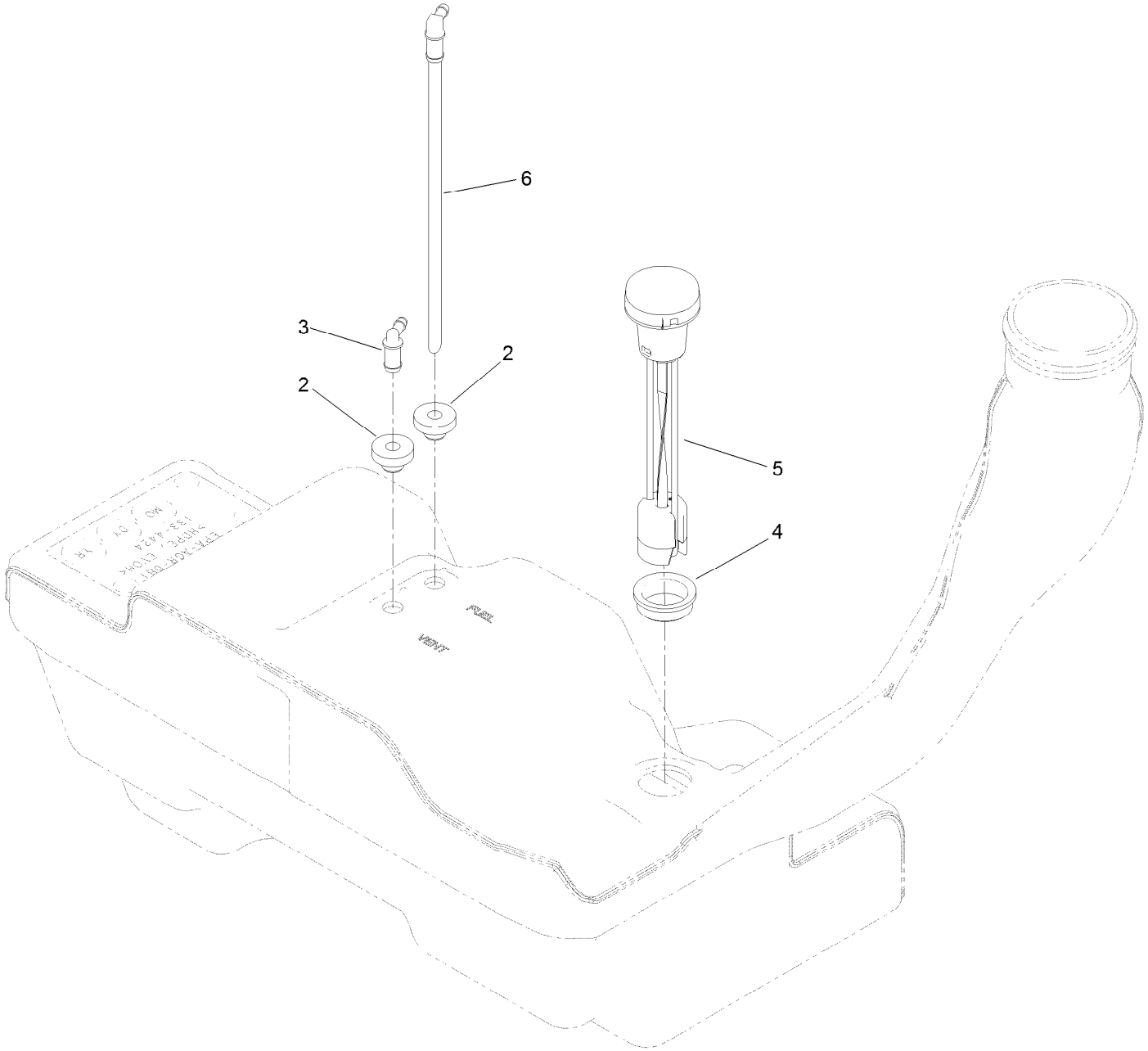

Fuel Tank Assembly No. 133-4484 (continued)

Ref.	Part Number	Qty.	Description
2	46-6560	2	Bushing
3	117-7400	1	Fitting-Plastic
4	133-9269	1	Grommet-Fuel
5	133-9270	1	Gauge-Fuel
6	121-0793	1	Connector-Elbow, 90 DEG

Electrical Assembly

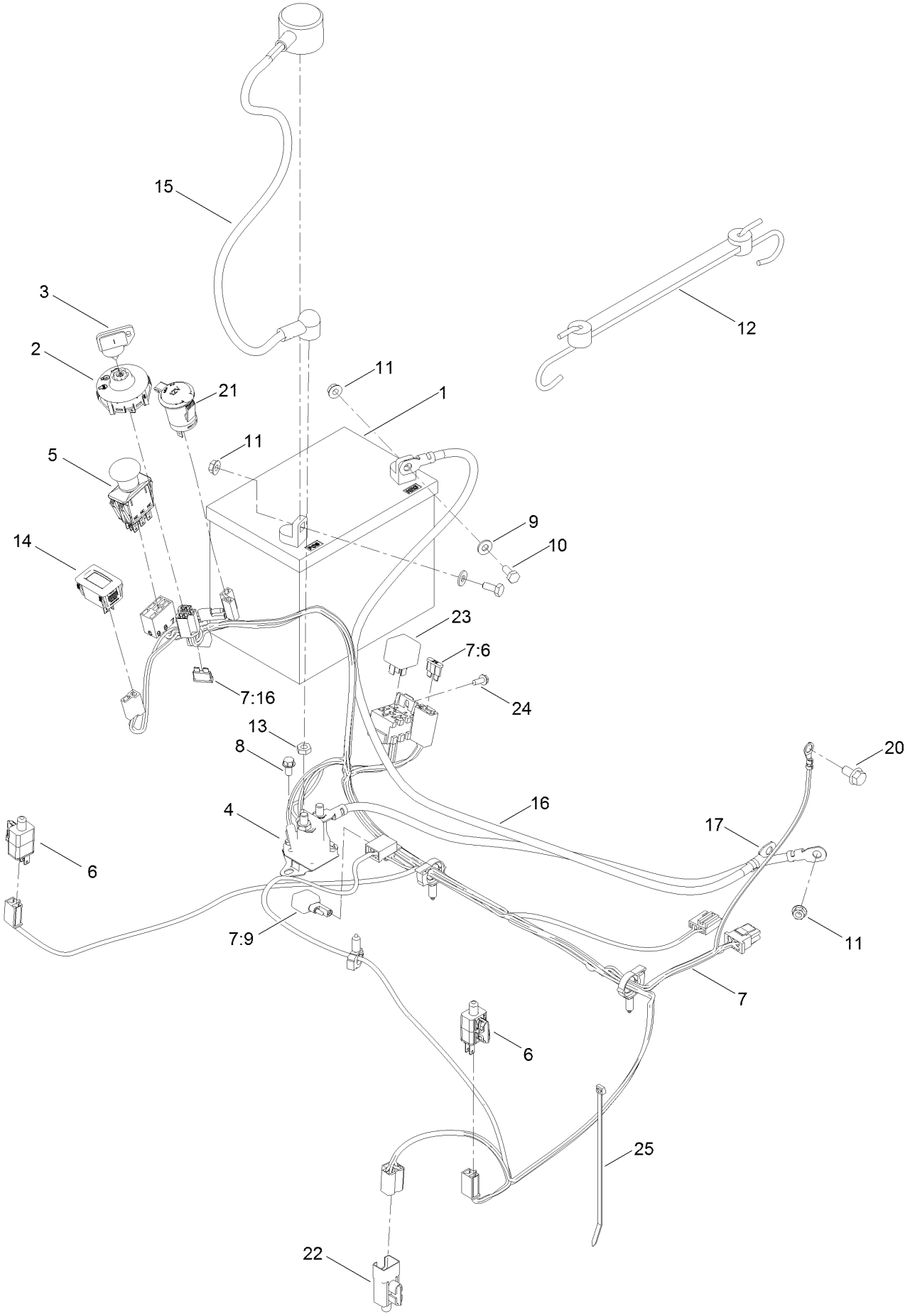

Electrical Assembly (continued)

Ref.	Part Number	Qty.	Description
1	105-1692	1	Battery
2	137-4100	1	Switch-Ignition
3	63-8360	1	Key-Ignition ●
4	117-1197	1	Solenoid
5	103-5221	1	Switch-PTO
6	110-6765	2	Switch
7	137-7002	1	Harness-Wire
7:6	109102	1	Fuse-Blade, 25 Amp
7:9	100-4918	1	Diode
7:16	109355	1	Fuse-Blade, 15 Amp
8	32144-4	2	Screw-HWH
9	3256-22	2	Washer-Flat
10	321-3	2	Screw-HH
11	32128-33	3	Nut-HF
12	104-2466	1	Holddown-Battery
13	3220-2	2	Nut-Jam
14	120-2244	1	Hourmeter
15	115-3864	1	Cable-Battery, Positive
16	136-7473	1	Cable-Battery, Positive
17	117-7240	1	Cable-Battery, Negative
20	33104-016	1	Screw-HHF
21	126-6499	1	Port-Power, 12V
22	99-7408	1	Switch-Reverse
23	98-7249	1	Relay
24	32144-1	1	Screw-Taptite
25	614249	1	Tie-Cable

● Not illustrated

Deck Assembly

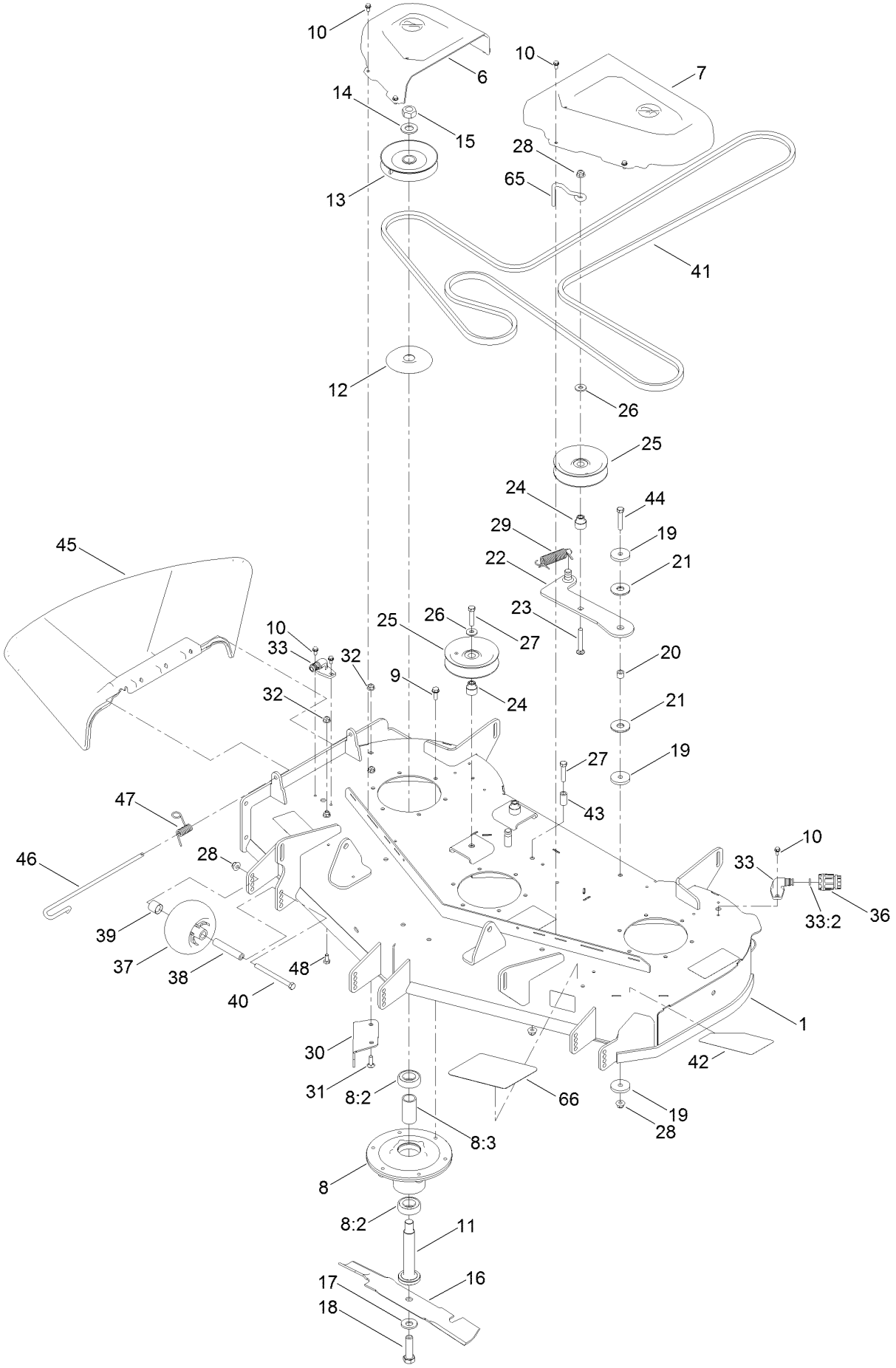

Deck Assembly (continued)

Ref.	Part Number	Qty.	Description
1	133-7066	1	Deck ASM
6	133-9283	1	Cover-Belt, RH
7	133-9282	1	Cover-Belt, LH
8	139-2357	3	Spindle ASM
8:2	116-0720	2	Bearing-Ball
8:3	138-7220	1	Spacer-Bearing
9	32144-41	18	Screw-Taptite
10	32144-4	12	Screw-HWH
11	115-2642	3	Shaft-Spindle
12	138-7221	3	Shield-Bearing
13	138-7224	3	Pulley
14	7-4150	3	Washer
15	3219-7	3	Nut-Hex
16	117-7277-03	3	Blade-Hi Flo, 16.50 Inch
17	125-1736	3	Washer-Belleville
18	51-4060	3	Screw-Blade
19	110-9981	3	Washer-Plain
20	138-7225	1	Spacer
21	114-0463	2	Washer-Friction, Composite
22	138-7226	1	Idler Arm ASM
23	3231-31	1	Screw-CARR
24	138-7227	3	Bushing-Idler
25	132-4718	3	Pulley-Idler, Flat
26	80-6990	3	Washer-Hardened
27	323-9	3	Screw-HH
28	104-8301	6	Nut-HF, NI
29	138-7228	1	Spring-Extension
30	117-7418-03	1	Baffle-Cutoff
31	3230-22	2	Screw-CARR
32	104-8300	3	Nut-HF, NI
33	133-9289	2	Fitting-Washout
33:2	133-9290	1	O-Ring
36	95-3270	1	Connector-Hose
37	1-603299	3	Roller-Scalp, Anti
38	138-7229	3	Tube-Spanner
39	104-0892	3	Spacer-Axle, Rear
40	323-23	3	Screw-HH
41	133-7075	1	V-Belt
42	139-3254	1	Decal - Deck
43	138-7230	1	Spacer-Fender
44	323-10	1	Screw-HH
45	133-1212	1	Deflector-Discharge
46	138-7231	1	Pin-Chute
47	138-7232	1	Spring-Torsion
48	322-2	1	Screw-HH
65	136-5615	1	Guide-Belt, Idler
66	139-3291	1	Tread-Step

Deck Decal Assembly No. 133-7066

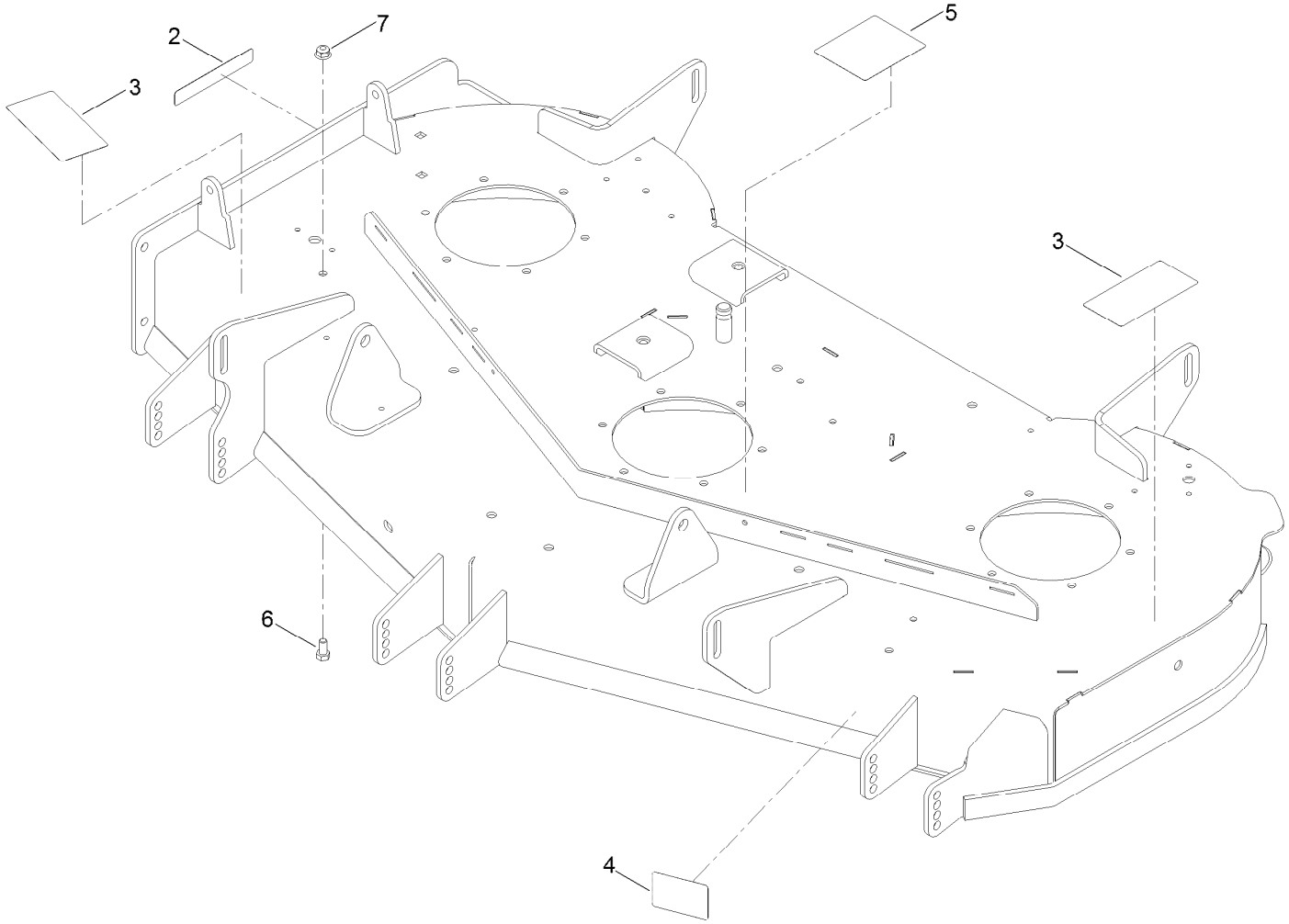

Deck Decal Assembly No. 133-7066 (continued)

Ref.	Part Number	Qty.	Description
2	130-0731	1	Decal-Danger
3	132-0872	2	Decal-Danger, Deck
4	130-0765	1	Decal-Scalp, Anti
5	117-1194	1	Decal-Routing, Belt
6	322-2	1	Screw-HH
7	104-8300	1	Nut-HF, NI

Model Specific Decal Assembly

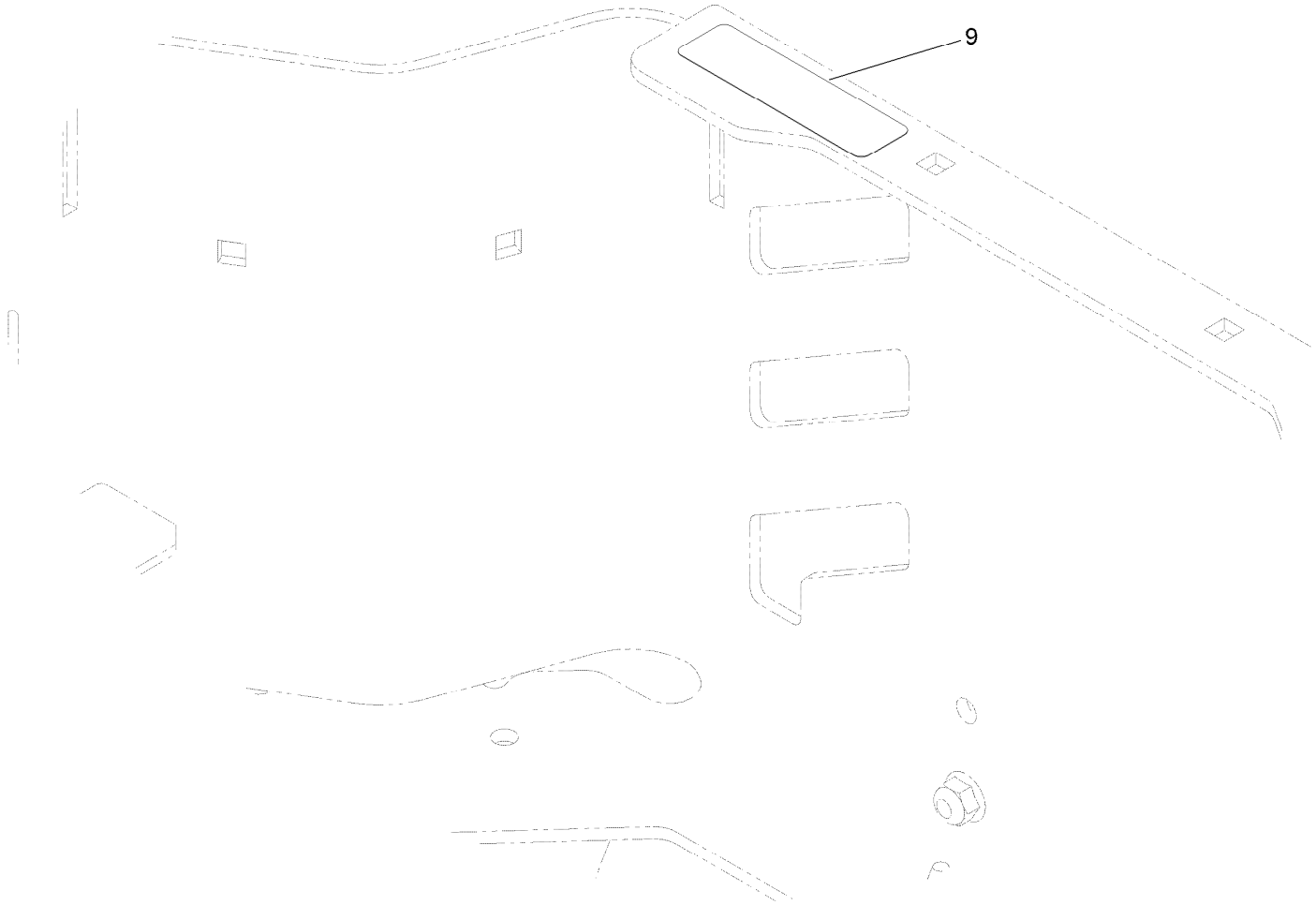

Model Specific Decal Assembly (continued)

Ref.	Part Number	Qty.	Description
9	136-9186	1	Decal-Bucket

Maintenance, HOC and Smart Speed Decal Assembly

Maintenance, HOC and Smart Speed Decal Assembly (continued)

Ref.	Part Number	Qty.	Description
1	136-5596	1	Decal-Maintenance
2	136-4245	1	Decal-Smart Speed
3	130-0654	1	Decal-HOC
4	121-5684	1	Decal-Location, Service Dealer

Clutch Assembly

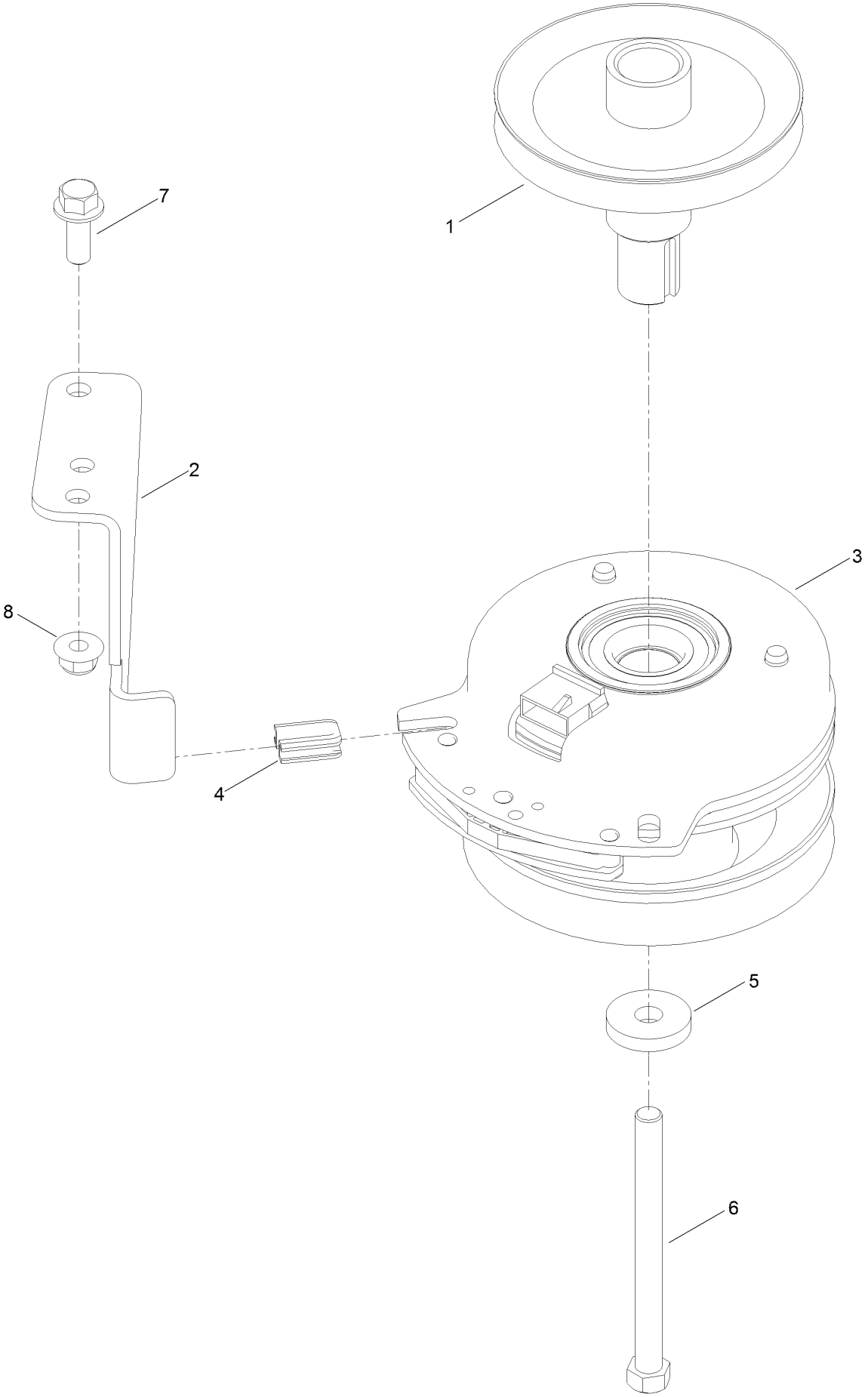

Clutch Assembly (continued)

Ref.	Part Number	Qty.	Description
1	133-1208	1	Pulley-Engine
2	137-7000	1	Stop-Clutch (Wide)
3	127-3410	1	Clutch-PTO
4	120-2217	1	Isolator-Clutch
5	112843	1	Washer
6	3212-19	1	Screw-HH
7	3234-42	1	Screw-HHF
8	104-8301	1	Nut-HF, NI

Attachments and Accessories

For 75210 TimeCutter HD MyRide 48in Riding Mower

Product Name	Model/Part
All Season Synthetic Oil (10W30, QT)	117-0066
48in Striping Kit	119-3380
Leaf Bagging Enhancement Kit	119-3381
Jack Kit	127-6666
Fuel Stabilizer .05 oz	130-2393
4-Cycle Fuel, Snow And Lawn 32oz Can	131-3823
Toro Premium Fuel Treatment 12 Oz Bottle	131-6572
Deck Lift Assist Kit	132-6850
5 Gallon Bucket	133-2533
48in Recycler Kit	136-7488
Mount Kit	136-7491
Weight Kit	136-7492
Light Kit	136-7493
Bucket Mount	136-7494
Rops Kit	136-7495
Jack Mount Kit	136-9200
HD Shock and Spring Kit	137-2042
Sunshade Timecutter HD	137-7011
Product Cover-Timecutter HD	137-7012
10w30 4-Cycle Engine Oil (32oz Bottle)	38280
Toro 4-Cycle SAE 30 Oil (32oz Bottle)	38903
EZ Vac Complete Twin Bagger	79345

Notes:

Notes:

Notes:

TORO®

Count on it.