Form No. 3425-367 Rev A

# Power Max® Heavy Duty 928 OAE Snowthrower

**Model No. 38850—Serial No. 400000000 and Up**

**Operator's Manual**

# Introduction

This machine is intended to be used by residential homeowners. It is designed primarily for removing snow from paved surfaces, such as driveways and sidewalks, and other surfaces for traffic on residential or commercial properties. It is not designed for removing materials other than snow.

Read this information carefully to learn how to operate and maintain your product properly and to avoid injury and product damage. You are responsible for operating the product properly and safely.

You may contact Toro directly at www.Toro.com for product safety and operation training materials, accessory information, help finding a dealer, or to register your product.

Whenever you need service, genuine Toro parts, or additional information, contact an Authorized Service Dealer or Toro Customer Service and have the model and serial numbers of your machine ready. Figure 1 identifies the location of the model and serial numbers on the machine. Write the numbers in the space provided.

***Important:*** **With your mobile device, you can scan the QR code on the serial number decal (if equipped) to access warranty, parts, and other product information.**

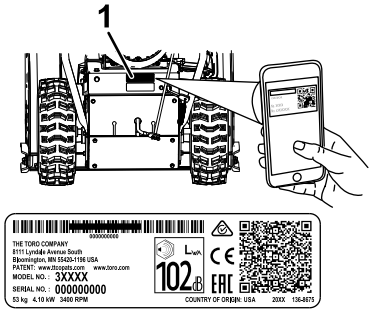


g219961

**Figure 1**

1. Model and serial number location

**Model No.** _____

**Serial No.** _____

This manual identifies potential hazards and has safety messages identified by the safety-alert symbol (Figure 2), which signals a hazard that may cause serious injury or death if you do not follow the recommended precautions.



g000502

**Figure 2**

Safety-alert symbol

This manual uses 2 words to highlight information. **Important** calls attention to special mechanical information and **Note** emphasizes general information worthy of special attention.

This product complies with all relevant European directives; for details, please see the separate product specific Declaration of Conformity (DOC) sheet.

***Important:*** **If you are using this machine above 1500 m (5,000 ft) for a continuous period, ensure that the High Altitude Kit has been installed so that the engine meets CARB/EPA emission regulations. The High Altitude Kit increases engine performance while preventing spark-plug fouling, hard starting, and increased emissions. Once you have installed the kit, attach the high-altitude label next to the serial decal on the machine. Contact any Authorized Toro Service Dealer to obtain the proper High Altitude Kit and high-altitude label for your machine. To locate a dealer convenient to you, access our website at www.Toro.com or contact our Toro Customer Care Department at the number(s) listed in your Emission Control Warranty Statement. Remove the kit from the engine and restore the engine to its original factory configuration when running the engine under 1500 m (5,000 ft). Do not operate an engine that has been converted for high-altitude use at lower altitudes; otherwise, you could overheat and damage the engine.**

**If you are unsure whether or not your machine has been converted for high-altitude use, look for the following label (Figure 3).**

**© 2018—The Toro® Company**
**8111 Lyndale Avenue South**
**Bloomington, MN 55420**

Register at www.Toro.com.

CE

Original Instructions (EN)
**Printed in the USA**
**All Rights Reserved**

*3425-367* A

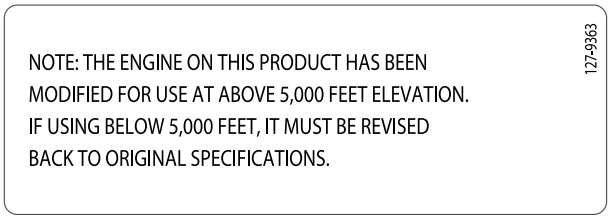


**Figure 3**

# Contents


Introduction ..... 1
Safety ..... 2
General Safety ..... 2
Safety and Instructional Decals ..... 3
Setup ..... 5
1 Installing the Upper Handle ..... 5
2 Installing the Traction-Control Linkage ..... 5
3 Installing the Chute-Control Rod ..... 6
4 Installing the Snow-Cleanout Tool ..... 6
5 Checking the Engine-Oil Level ..... 7
6 Checking and Adjusting the Tire Pressure ..... 7
7 Checking the Skids and Scraper ..... 7
8 Checking the Operation of the Traction Drive ..... 8
Product Overview ..... 9
Specifications ..... 9
Attachments/Accessories ..... 9
Operation ..... 10
Before Operation ..... 10
Before Operation Safety ..... 10
Filling the Fuel Tank ..... 10
During Operation ..... 10
During Operation Safety ..... 10
Starting the Engine ..... 11
Shutting Off the Engine ..... 13
Operating the Traction Drive ..... 13
Operating the Speed Selector ..... 13
Operating the Auger/Impeller Drive ..... 13
Operating the Quick Stick® ..... 14
Clearing a Clogged Discharge Chute ..... 15
Operating Tips ..... 15
After Operation ..... 16
After Operation Safety ..... 16
Preventing Freeze-up after Use ..... 16
Maintenance ..... 17
Recommended Maintenance Schedule(s) ..... 17
Maintenance Safety ..... 17
Preparing for Maintenance ..... 17
Checking the Engine-Oil Level ..... 18
Checking and Adjusting the Skids and Scraper ..... 18
Checking and Adjusting the Traction Cable ..... 19
Checking and Adjusting the Auger/Impeller Cable ..... 19
Checking the Auger-Gearbox-Oil Level ..... 20
Changing the Engine Oil ..... 20
Lubricating the Hex Shaft ..... 21
Replacing the Spark Plug ..... 22
Replacing the Drive Belts ..... 22
Replacing the Headlight ..... 23
Storage ..... 23
Storing the Machine ..... 23
Removing the Machine from Storage ..... 23
Troubleshooting ..... 24


# Safety

This snowthrower is capable of injuring hands and feet and of throwing objects. Failure to observe the following safety instructions could result in serious injury.

This machine complies with EN ISO 8437 specifications.

## General Safety

- Read and understand the contents of this *Operator's Manual* before you start the engine. Ensure that everyone using this product knows how to use it, knows how to shut off the engine quickly, and understands the warnings.
- Shut off the engine whenever you leave the operating position for any reason.
- Do not put your hands or feet near moving parts on the machine.
- Do not operate the machine without all guards and other safety protective devices in place and working.
- Keep clear of any discharge opening. Keep bystanders, especially small children, out of the operating area.
- Never allow children to operate the machine.

# Safety and Instructional Decals

Safety decals and instructions are easily visible to the operator and are located near any area of potential danger. Replace any decal that is damaged or missing.




decal107-3040

**107-3040**

1. Cutting/dismemberment hazards of hand or foot, impeller and auger—keep bystanders a safe distance away from the machine.

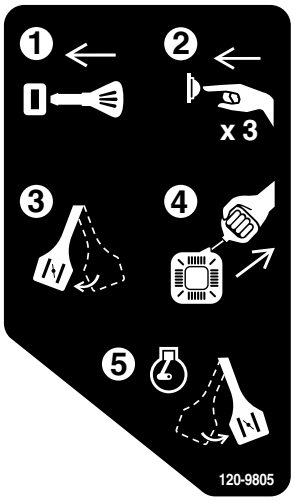


decal120-9805

**120-9805**

1. Insert the key.
2. Prime the engine 3 times.
3. Engage the choke.
4. Pull the starter cord.
5. Once the engine is running, disengage the choke.

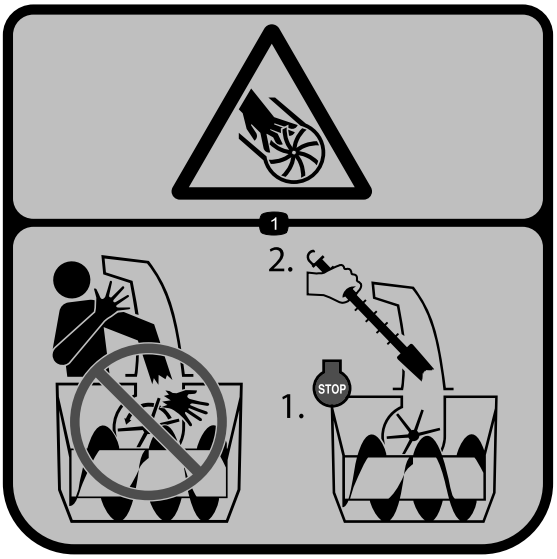


decal121-6847

**121-6847**

1. Cutting/dismemberment hazard of the fingers or hand, impeller—do not place your hand in the chute; shut off the engine before using the tool to clear the chute.

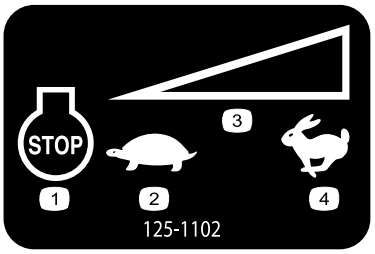


decal125-1102

**125-1102**

1. Engine—shut off
2. Slow
3. Variable speed control
4. Fast

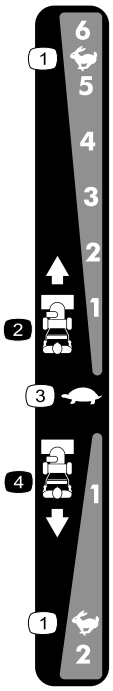


decal138-0652

**138-0652**

Order Part No. 137-6208

1. Fast
2. Forward speed
3. Slow
4. Reverse speed




decal137-6249

**137-6249**

1. Squeeze the lever to engage the traction drive.
2. Warning—read the *Operator's Manual*.
3. Cutting/dismemberment of fingers or hand, impeller blade—do not place your hand in the chute; shut off the engine before using the tool to clear the chute.
4. Cutting/dismemberment of fingers or hand, impeller blade—keep away from moving parts; keep all guards and shields in place; remove the key from the ignition before servicing the machine.
5. Thrown object hazard—keep bystanders away.
6. Squeeze the lever to engage the impeller.

# Setup

# 1

## Installing the Upper Handle

**No Parts Required**

### Procedure

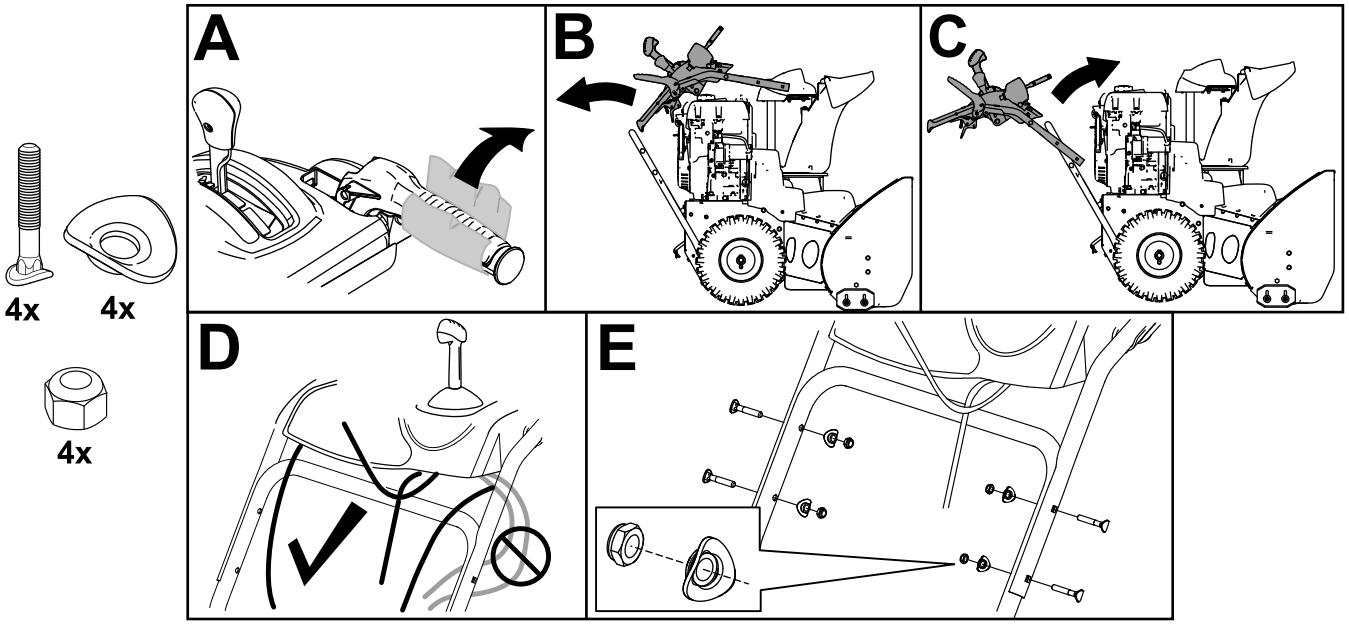


g256709

# 2

## Installing the Traction-Control Linkage

**No Parts Required**

### Procedure

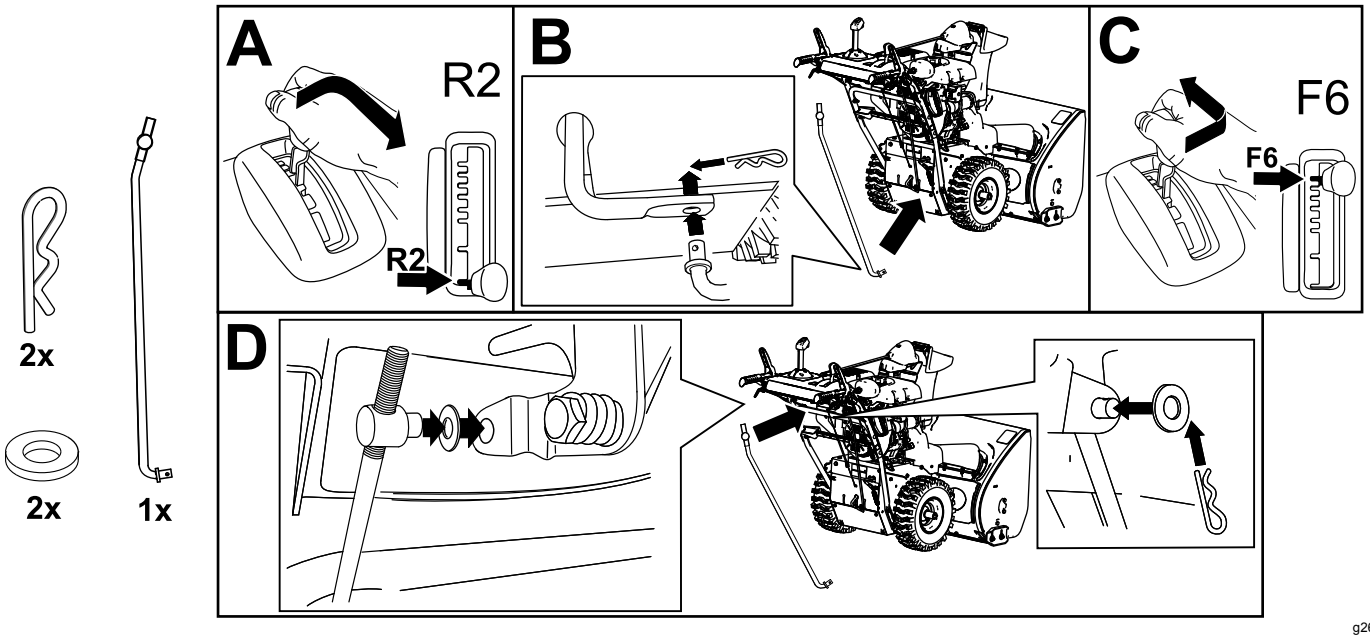


g263628

# 3

## Installing the Chute-Control Rod

**No Parts Required**

### Procedure

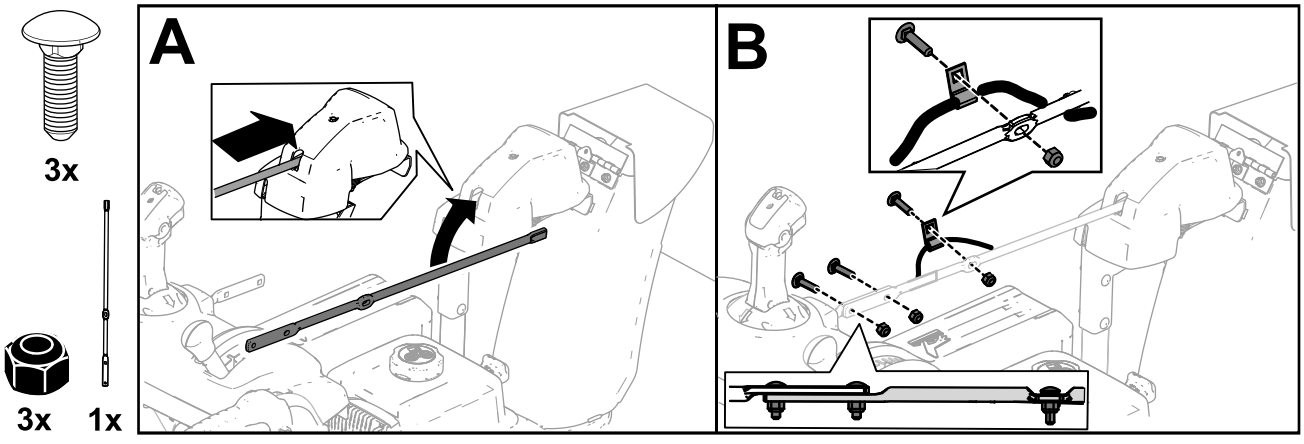


g252615

# 4

## Installing the Snow-Cleanout Tool

**No Parts Required**

### Procedure

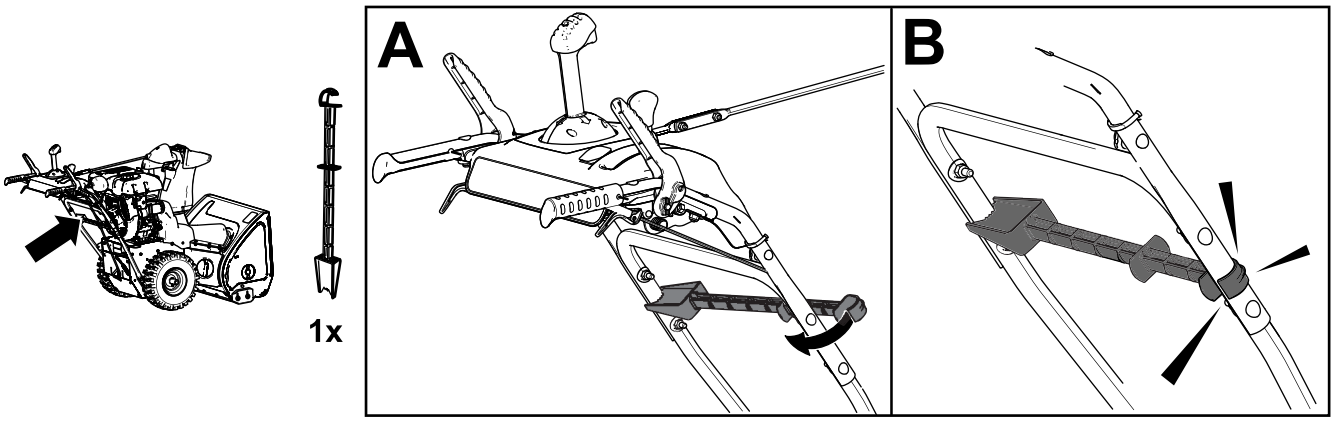


g256722

# 5

## Checking the Engine-Oil Level

**No Parts Required**

### Procedure

**Note:** Your machine comes with oil in the engine crankcase. Before starting the engine, check the oil level and add oil if necessary.

Refer to Checking the Engine-Oil Level (page 18).

# 6

## Checking and Adjusting the Tire Pressure

**No Parts Required**

### Procedure

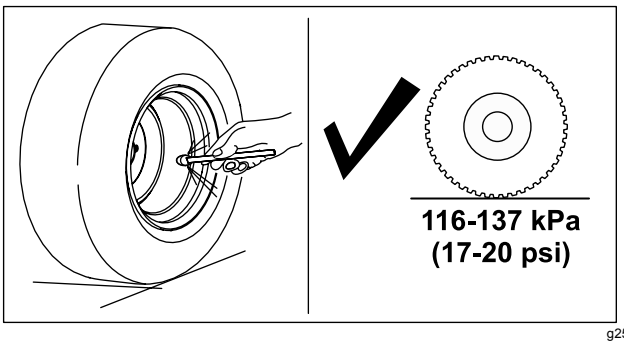


g257835

# 7

# Checking the Skids and Scraper

**No Parts Required**

## Procedure

Refer to Checking and Adjusting the Skids and Scraper (page 18).

# 8

# Checking the Operation of the Traction Drive

**No Parts Required**

## Procedure

**⚠ CAUTION**

**If the traction drive is not properly adjusted, the machine may move in the direction opposite of what you intended, causing injury and/or property damage.**

**Carefully check the traction drive and adjust it properly, if necessary.**

1. Start the engine; refer to Starting the Engine (page 11).
2. Move the speed selector to Position R1; refer to Operating the Speed Selector (page 13).
3. Squeeze the left (traction) lever to the handgrip (Figure 9).

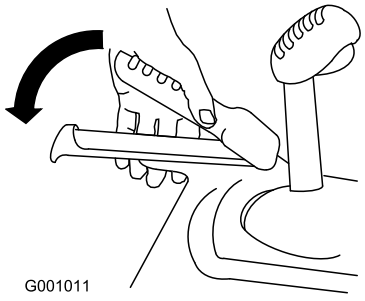


g001011

**Figure 9**

The machine should move rearward. If the machine does not move or moves forward, complete the following:

A. Release the traction lever and shut off the engine.

B. Disconnect the trunnion from the speed-selector lever.

C. Turn the trunnion downward (clockwise) on the speed-control rod.

D. Connect the trunnion to the speed-selector lever.

4. Release the traction lever.
5. Move the speed selector to Position 1; refer to Operating the Speed Selector (page 13).
6. Squeeze the left (traction) lever to the handgrip (Figure 9).

   The machine should move forward. If the machine does not move or moves rearward, complete the following:

   A. Release the traction lever and shut off the engine.

   B. Disconnect the trunnion from the speed-selector lever.

   C. Turn the trunnion upward (counterclockwise) on the speed-control rod.

   D. Connect the trunnion to the speed-selector lever.

7. If you made any adjustments, repeat this procedure until no adjustments are required.

***Important:*** **If the machine moves when the traction lever is in the released position, check the traction cable; refer to Checking and Adjusting the Traction Cable (page 19) or take the machine to an Authorized Service Dealer for service.**

# Product Overview

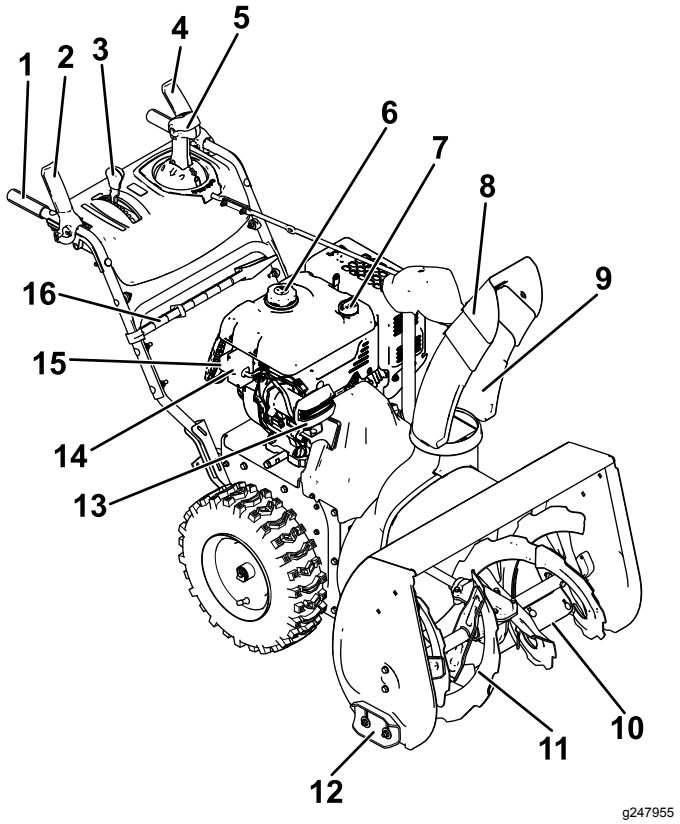


**Figure 10**

1. Handgrip (2)
2. Auger/impeller lever
3. Speed-selector lever
4. Traction lever
5. Quick Stick® discharge-chute control
6. Fuel-tank cap
7. Oil-fill tube/dipstick
8. Chute deflector
9. Discharge chute
10. Scraper
11. Auger
12. Skid (2)
13. Headlight
14. Electric-start button
15. Electric-start plug-in
16. Snow-cleanout tool

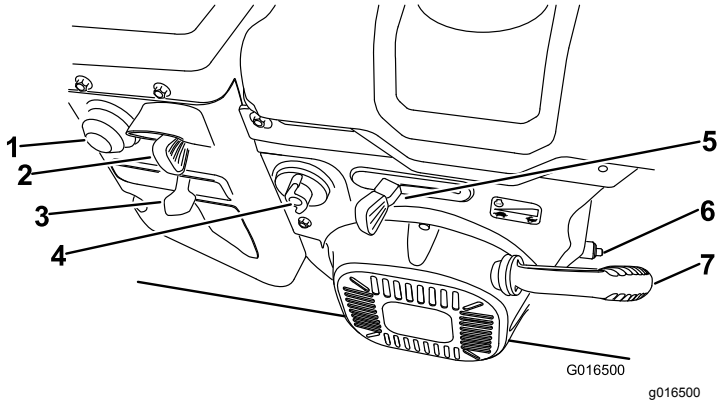


**Figure 11**

1. Primer
2. Ignition switch
3. Choke
4. Fuel-shutoff valve
5. Throttle
6. Oil-drain plug
7. Recoil-start handle

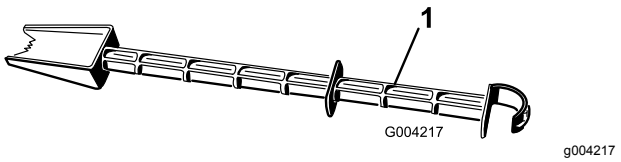


**Figure 12**

1. Snow-cleanout tool (attached to the handle)

# Specifications

| Model | Weight | Length | Width | Height |
|---|---|---|---|---|
| 38850 | 124.7 kg (275 lb) | 160 cm (63 inches) | 74 cm (29 inches) | 114 cm (45 inches) |

## Attachments/Accessories

A selection of Toro approved attachments and accessories is available for use with the machine to enhance and expand its capabilities. Contact your Authorized Service Dealer or authorized Toro distributor or go to www.Toro.com for a list of all approved attachments and accessories.

To ensure optimum performance and continued safety certification of the machine, use only genuine Toro replacement parts and accessories. Replacement parts and accessories made by other manufacturers could be dangerous, and such use could void the product warranty.

# Operation

**Note:** Determine the left and right sides of the machine from the normal operating position.

# *Before Operation*

## Before Operation Safety

### General Safety

- **For electric-start models only:** Use extension cords and receptacles as specified in the manual. Inspect the electrical cord before plugging it into a power source. If the cord is damaged, replace it. Unplug the power cord whenever you are not starting the machine.
- Wear appropriate clothing, including eye protection; long pants; substantial, slip-resistant footwear; and hearing protection. Tie back long hair, secure loose clothing, and do not wear loose jewelry.
- Thoroughly inspect the area where you will use the machine, and remove all doormats, sleds, boards, wires, and other foreign objects.
- If a shield, safety device, or decal is damaged, illegible, or missing, repair or replace it before beginning operation. Also, tighten any loose fasteners.
- **Two-stage models only:** Adjust the collector housing height to clear a gravel or crushed-rock surface.

### Fuel Safety

Fuel is extremely flammable and explosive. A fire or explosion from fuel can burn you and others.

- To prevent a static charge from igniting the fuel, place the container and/or machine on the ground before filling, not in a vehicle or on an object.
- Fill the fuel tank outdoors when the engine is cold. Replace the fuel cap securely and wipe up spills.
- Do not handle fuel when smoking or around an open flame or sparks.
- Store fuel in an approved fuel container, out of the reach of children.
- When fuel is in the tank, tip the machine only as directed in the instructions.
- If you spill fuel on your clothing, change your clothing immediately.

## Filling the Fuel Tank

- For best results, use only clean, fresh (less than 30 days old), unleaded gasoline with an octane rating of 87 or higher ((R+M)/2 rating method).
- Oxygenated fuel with up to 10% ethanol or 15% MTBE by volume is acceptable.
- **Do not** use ethanol blends of gasoline (such as E15 or E85) with more than 10% ethanol by volume. Performance problems and/or engine damage may result which may not be covered under warranty.
- **Do not** use gasoline containing methanol.
- **Do not** store fuel either in the fuel tank or fuel containers over the winter unless you use a fuel stabilizer.
- **Do not** add oil to gasoline.

Do not fill above the bottom of the fuel tank neck (Figure 13).

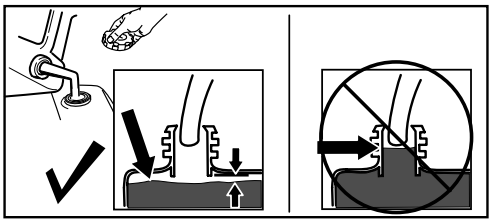

g216203

**Figure 13**

***Important:*** **For best results, purchase only the quantity of fuel that you expect to use in 30 days. Otherwise, you may use fuel stabilizer/conditioner in the machine at all times to keep the fuel fresh longer when used as directed by the fuel-stabilizer manufacturer.**

# *During Operation*

## During Operation Safety

### General Safety

- **Shut off the engine before unclogging the machine and always use a stick or the snow-cleanout tool (if provided).**
- Stay behind the handles and away from the discharge opening while operating the machine. **Keep your face, hands, feet, and any other part of your body or clothing away from moving or rotating parts.**
- Never direct the discharge toward people or areas where property damage can occur.
- Use your full attention while operating the machine. Do not engage in any activity that

causes distractions; otherwise, injury or property damage may occur.

- Exercise caution to avoid slipping or falling, especially when operating the machine in reverse.
- Always be sure of your footing, and keep a firm hold on the handles. Walk; never run.
- Exercise extreme caution when operating the machine on a slope.
- Do not operate the machine without good visibility or light.
- Look behind and use care when backing up the machine.
- When not actively clearing snow, disengage power to the auger.
- Exercise extreme caution when operating the machine on or crossing gravel drives (2-stage models only), walks, or roads. Stay alert for hidden hazards or traffic.
- Never attempt to make any adjustments while the engine is running, except as directed in the instructions.
- After striking a foreign object, shut off the engine, remove the ignition key (electric-start models only), inspect the machine for damage. Repair any damage before starting the machine.
- If the machine starts to vibrate abnormally, shut off the engine and check immediately for the cause.
- Do not run the engine indoors; exhaust fumes are dangerous.
- Do not overload the machine capacity by attempting to clear snow at too fast a rate.
- Disengage all clutches and shift into neutral before starting the engine.
- Shut off the engine whenever you leave the operating position, before clearing or unclogging the collector, impeller, or discharge chute, and when making any repairs, adjustments, or inspections.
- Never operate the machine at high transport speeds on slippery surfaces.

# Starting the Engine

## Electric Start

**Note:** To use the electric starter (electric-start models only), connect a power cord to the plug-in first and then to a power outlet. Use only a UL-listed, 16-gauge extension cord recommended for outdoor use that is not longer than 50 ft (15 m).

**⚠ WARNING**

**The electrical cord can become damaged, causing a shock or fire.**

**Thoroughly inspect the electrical cord before using the machine. If the cord is damaged, do not use it. Replace or repair the damaged cord immediately. Contact an Authorized Service Dealer for assistance.**

**⚠ CAUTION**

**If you leave the machine plugged into a power outlet, someone can inadvertently start the machine and injure people or damage property.**

**Unplug the power cord whenever you are not starting the machine.**

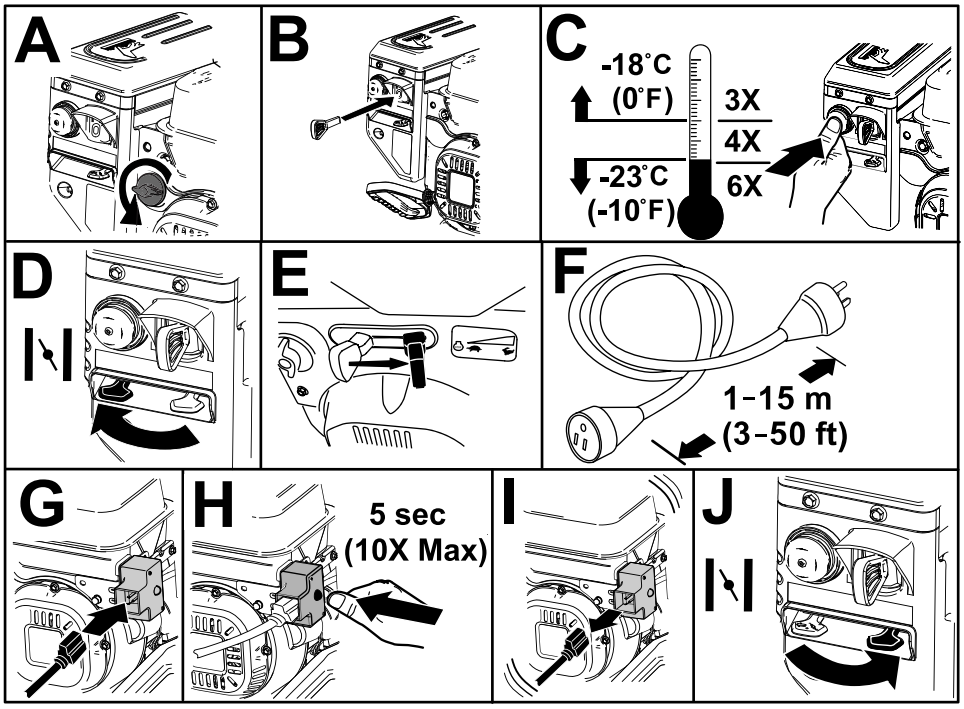


g257504

**Figure 14**

## Recoil Start

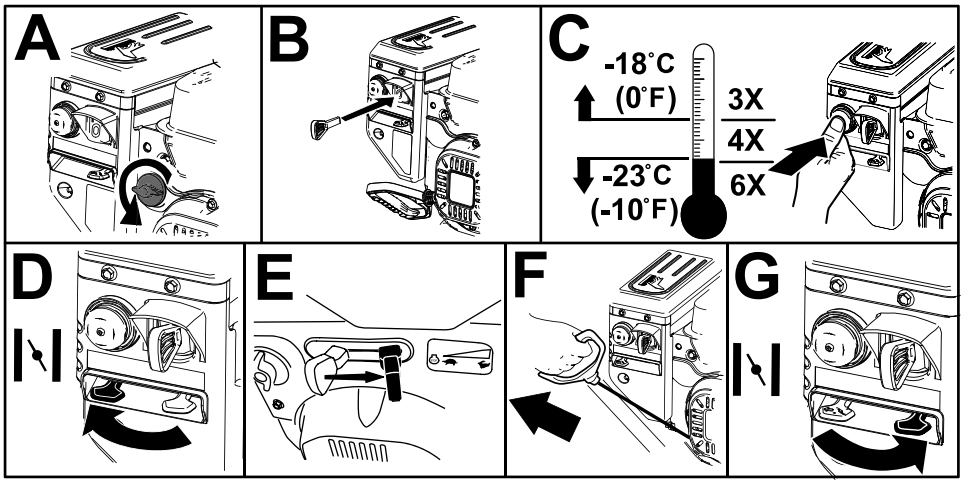


g257505

**Figure 15**

# Shutting Off the Engine

***Important:*** **Wait for all moving parts to stop before leaving the operating position.**

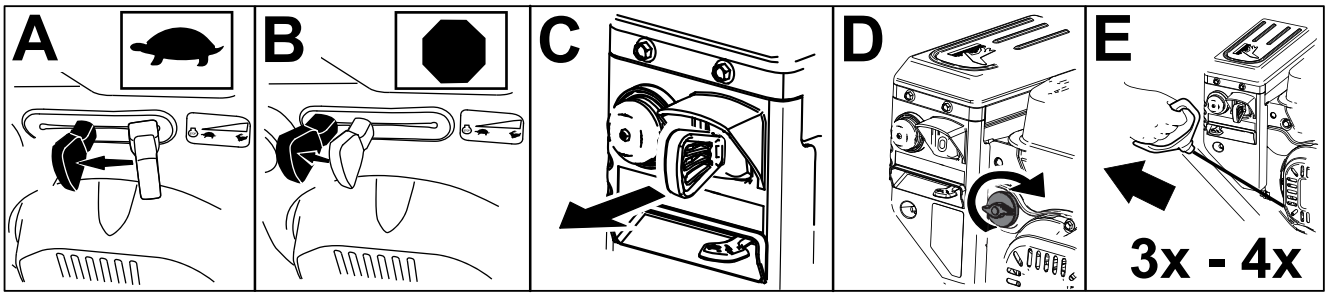


g252411

**Figure 16**

# Operating the Traction Drive

**⚠ CAUTION**

**If the traction drive is not properly adjusted, the machine may move in the direction opposite of what you intended, causing injury and/or property damage.**

**Carefully check the traction drive and adjust it properly, if necessary.**

***Important:*** **If the machine moves when the traction lever is in the released position, check the traction cable; refer to Checking and Adjusting the Traction Cable (page 19) or take the machine to an Authorized Service Dealer for service.**

***Important:*** **To operate the traction drive, you must operate the machine with the self-propel feature engaged.**

1. To engage the traction drive, squeeze the left (traction) lever to the handgrip (Figure 17).

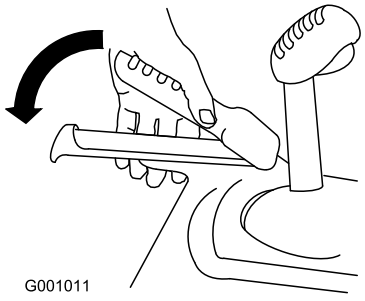


g001011

**Figure 17**

2. To stop the traction drive, release the traction lever.

# Operating the Speed Selector

The speed selector has 6 forward and 2 reverse gears. To change speeds, release the traction lever and shift the speed-selector lever to the desired position (Figure 18). The lever locks in a notch at each speed selection.

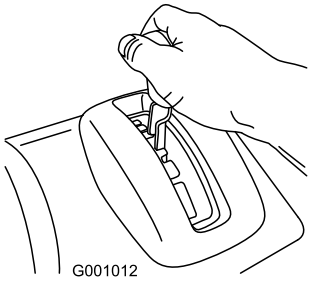


g001012

**Figure 18**

# Operating the Auger/Impeller Drive

1. To engage the auger/impeller drive, squeeze the right (auger/impeller) lever to the handgrip (Figure 19).

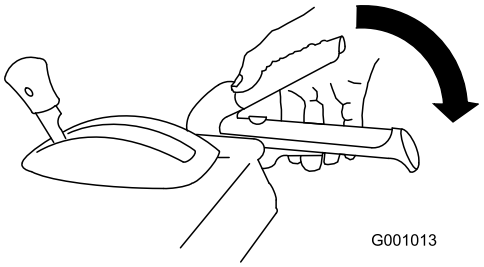


g001013

**Figure 19**

2. To stop the auger and impeller, release the right lever.

   ***Important:*** **When you engage both the auger/impeller lever and the traction lever, the traction lever locks the auger/impeller lever down, freeing your right hand. To release both levers, simply release the left (traction) lever.**

3. If the auger and impeller continue to rotate when you release the auger/impeller lever, do not operate the machine. Check the auger/impeller cable; refer to Checking and Adjusting the Auger/Impeller Cable (page 19) and adjust it if necessary. Otherwise, take the machine to an Authorized Service Dealer for service.

**⚠ WARNING**

**If the auger and impeller continue to rotate when you release the auger/impeller lever, you could seriously injure yourself or others.**

**Do not operate the machine. Take it to an Authorized Service Dealer for service.**

# Operating the Quick Stick®

Hold the blue trigger cap down to use the Quick Stick to move the discharge chute and the chute deflector. Release the trigger cap to lock the discharge chute and chute deflector into position (Figure 20).

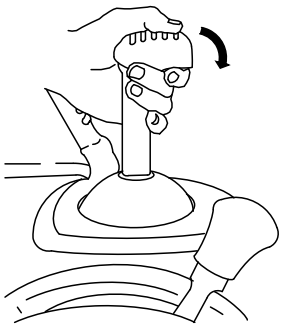


g001014

**Figure 20**

## Moving the Discharge Chute

Hold the blue trigger cap down and move the Quick Stick to the left to move the discharge chute to the left; move the Quick Stick to the right to move the discharge chute to the right (Figure 21).

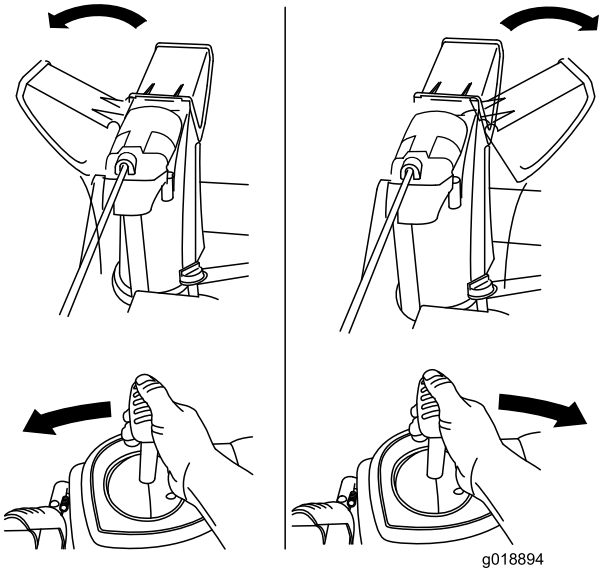


g018894

**Figure 21**

If the chute does not turn as far to the left as it does to the right, ensure that the cable is routed to the inside of the handles. Refer to 1 Installing the Upper Handle (page 5).

## Moving the Chute Deflector

Hold the blue trigger cap down and move the Quick Stick forward to lower the chute deflector; move it rearward to raise the chute deflector (Figure 22).

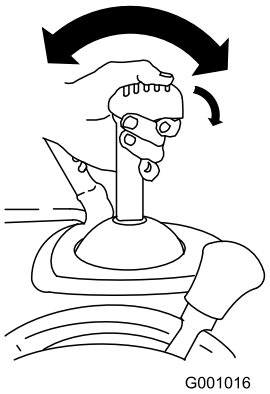


g001016

**Figure 22**

# Clearing a Clogged Discharge Chute

**⚠ WARNING**

**If the auger/impeller is running but there is no snow coming out of the discharge chute, the discharge chute may be clogged.**

**Never use your hands to clear a clogged discharge chute. This could result in personal injury.**

- To unclog the discharge chute, stay in the operating position and release the left (traction) lever. While running the auger/impeller, push down on the handles to raise the front of the machine a few centimeters (inches) off the pavement. Then lift the handles quickly to bump the front of the machine on the pavement. Repeat if necessary until a stream of snow comes out the discharge chute.
- If you cannot unclog the discharge chute by bumping the front of the machine, **shut off the engine, wait for all moving parts to stop, and use the snow-cleanout tool (Figure 12).**

  ***Important:*** **Unclogging the discharge chute by bumping the front of the machine on the pavement may cause the skids to move. Adjust the skids and tighten the skid bolts securely; refer to 7 Checking the Skids and Scraper (page 7).**

# Operating Tips

**⚠ DANGER**

**When the machine is in operation, the impeller and auger rotate and can injure or amputate hands or feet.**

- **Before adjusting, cleaning, inspecting, troubleshooting, or repairing the machine, shut off the engine and wait for all moving parts to stop. Disconnect the wire from the spark plug and keep it away from the plug to prevent someone from accidentally starting the engine.**
- **Remove an obstruction from the discharge chute; refer to Clearing a Clogged Discharge Chute (page 15). Use the snow-cleanout tool (Figure 13), not your hands, to remove an obstruction from the discharge chute.**
- **Stay behind the handles and away from the discharge opening while operating the machine.**
- **Keep your face, hands, feet, and any other part of your body or clothing away from concealed, moving, or rotating parts.**

**⚠ WARNING**

**The impeller can throw stones, toys, and other foreign objects and cause serious personal injury to you or bystanders.**

- **Keep the area to be cleared free of all objects that the auger could pick up and throw.**
- **Keep all children and pets away from the area of operation.**

- Always set the throttle to the FAST position when throwing snow.
- If the engine slows down under a load or the wheels slip, shift the machine into a lower gear.
- If the front of the machine rides up, shift the machine into a lower gear. If the front continues to ride up, lift up on the handles.

# *After Operation*

# After Operation Safety

## General Safety

- Never store the machine with fuel in the fuel tank inside a building where ignition sources are present, such as hot water heaters, space heaters, or clothes dryers. Allow the engine to cool before storing the machine in any enclosure.
- When storing the machine for more than 30 days, refer to Storage (page 23) for important information.
- Run the machine a few minutes after throwing snow to prevent freeze-up of the collector and impeller.

# Preventing Freeze-up after Use

- In snowy and cold conditions, some controls and moving parts may freeze. **Do not use excessive force when trying to operate frozen controls.** If you have difficulty operating any control or part, start the engine and let it run for a few minutes.
- After using the machine, let the engine run for a few minutes to prevent moving parts from freezing. Engage the auger/impeller to clear any remaining snow from inside the housing. Rotate the Quick Stick to prevent it from freezing. Shut off the engine, wait for all moving parts to stop, and remove all ice and snow from the machine.
- With the engine off, pull the recoil-start handle several times and push the electric-start button once to prevent the recoil starter and electric starter from freezing up.

# Maintenance

## Recommended Maintenance Schedule(s)

| Maintenance Service Interval | Maintenance Procedure |
|---|---|
| After the first 2 hours | • Inspect the traction cable and adjust it if necessary.<br>• Inspect the auger/impeller cable and adjust it if necessary. |
| After the first 5 hours | • Change the engine oil. |
| Before each use or daily | • Check the engine-oil level and add oil if necessary. |
| Every 50 hours | • Change the engine oil. Change the engine oil every 25 operating hours when operating the engine under a heavy load. |
| Every 100 hours | • Replace the spark plug. |
| Yearly | • Check the skids and scraper and adjust them if necessary.<br>• Inspect the traction cable and adjust or replace it if necessary.<br>• Inspect the auger/impeller cable and adjust or replace it if necessary.<br>• Check the auger-gearbox oil and add oil if necessary.<br>• Lubricate the hex shaft. |
| Yearly or before storage | • Check the air pressure in the tires and inflate them to 116 to 137 kPa (17 to 20 psi).<br>• Run the engine to dry out the fuel tank and the carburetor at the end of the season.<br>• Have an Authorized Service Dealer inspect and replace the traction drive belt and/or the auger/impeller drive belt, if necessary. |

## Maintenance Safety

Read the following safety precautions before performing any maintenance on the machine:

- Before servicing, adjusting, or cleaning the machine, shut off the engine and remove the key. If major repairs are ever needed, contact an Authorized Service Dealer.
- Always wear eye protection while performing an adjustment or repair to protect your eyes from foreign objects that the machine may throw.
- Check all fasteners at frequent intervals for proper tightness to ensure that the machine is in safe working condition.
- Do not change the governor settings on the engine.

  Purchase only genuine Toro replacement parts and accessories.

## Preparing for Maintenance

1. Move the machine to a level surface.
2. Shut off the engine and wait for all moving parts to stop.
3. Disconnect the spark-plug wire. Refer to Replacing the Spark Plug (page 22).

# Checking the Engine-Oil Level

**Service Interval:** Before each use or daily—Check the engine-oil level and add oil if necessary.

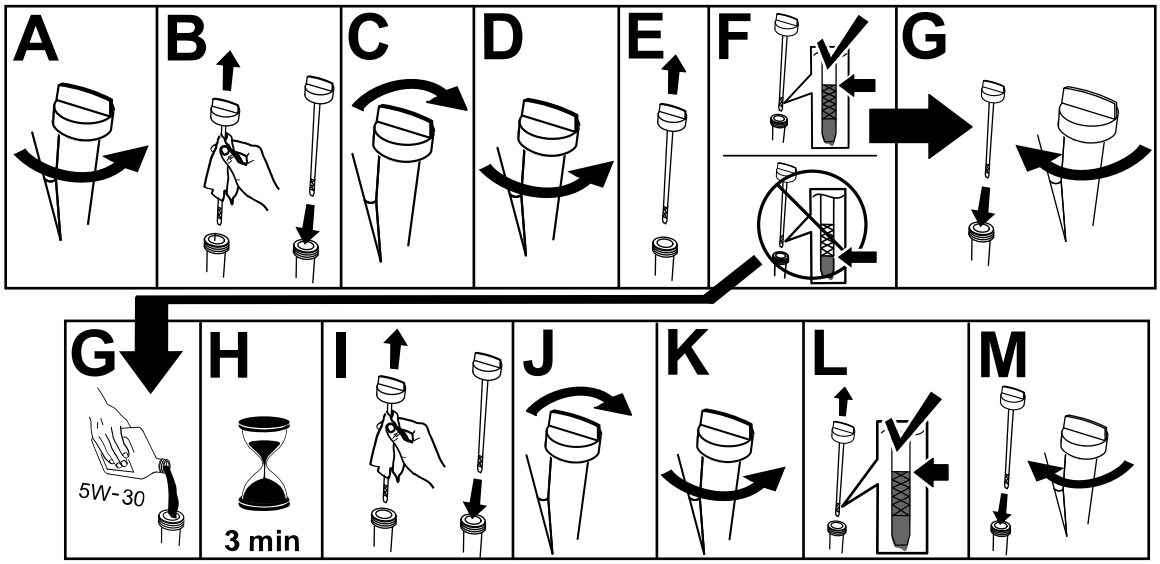


g257528

# Checking and Adjusting the Skids and Scraper

**Service Interval:** Yearly—Check the skids and scraper and adjust them if necessary.

Check the skids to ensure that the auger does not contact the paved or gravel surface. Adjust the skids as needed to compensate for wear.

1. Check the tire pressure; refer to 6 Checking and Adjusting the Tire Pressure (page 7).
2. Loosen the nuts that secure both skids to the auger sides until the skids slide up and down easily (Figure 24).

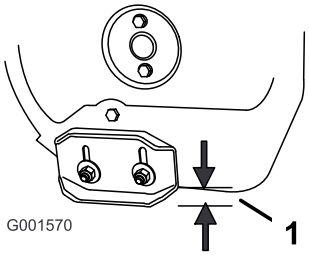


g001570

**Figure 24**

1. 1.3 cm (1/2 inch)

3. Support the side plates so that they are **at least** 1.3 cm (1/2 inch) above a level surface.

   ***Important:*** **The auger blades must be supported above the ground by the skids.**

4. Ensure that the scraper is 3 mm (1/8 inch) above and parallel to a level surface.

   **Note:** If the pavement is cracked, rough, or uneven, adjust the skids to raise the scraper. For gravel surfaces, adjust the skids further down to prevent the machine from picking up rocks.

5. Move the skids down until they are even with the ground.
6. Firmly tighten the nuts that secure both skids to the auger sides.

   **Note:** To quickly adjust the skids if they loosen, support the scraper 3 mm (1/8 inch) off the pavement, then adjust the skids down to the pavement.

   **Note:** If the skids become excessively worn, you can turn them over and set the unused side toward the pavement.

# Checking and Adjusting the Traction Cable

**Service Interval:** After the first 2 hours—Inspect the traction cable and adjust it if necessary.

Yearly—Inspect the traction cable and adjust or replace it if necessary.

If the machine does not drive in the forward or reverse speeds or it drives when you release the traction lever, adjust the traction cable.

With the traction level disengaged, ensure that the bottom of the traction-cable bracket is touching the frame of the machine (Figure 23).

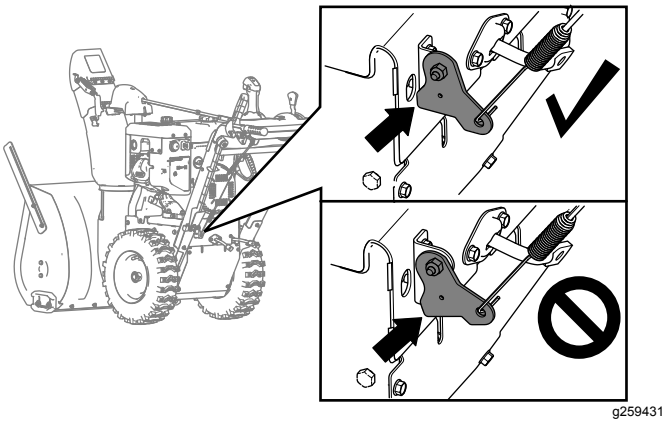

g259431

**Figure 25**

If the bottom of the traction-cable bracket is not touching the frame of the machine, the left (traction) cable is not properly adjusted.

To adjust the traction cable, do the following:

1. Loosen the jam nut.
2. Loosen or tighten the turnbuckle to until the cable is taught and the bottom of the bracket touches the frame of the machine.
3. Tighten the jam nut (Figure 26).

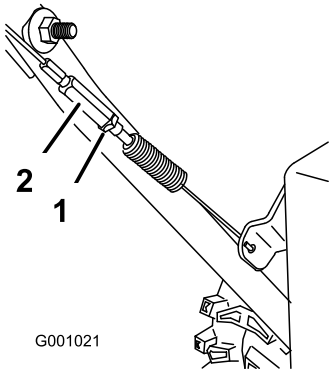


g001021

**Figure 26**

1. Jam nut
2. Turnbuckle

# Checking and Adjusting the Auger/Impeller Cable

**Service Interval:** After the first 2 hours—Inspect the auger/impeller cable and adjust it if necessary.

Yearly—Inspect the auger/impeller cable and adjust or replace it if necessary.

1. Remove the 2 screws that are holding the belt cover in place (Figure 27).
2. Remove the belt cover (Figure 27).

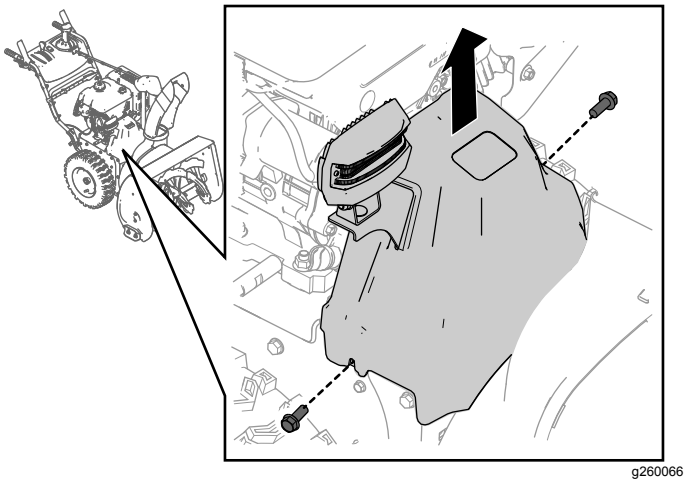

g260066

**Figure 27**

3. With the auger/impeller lever disengaged, ensure that the gap between the auger clutch arm and the frame of the machine is 1.5 mm (1/16 inch) as shown in Figure 28.

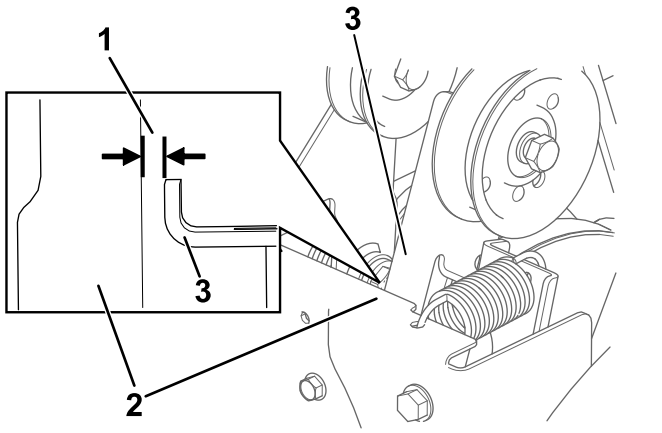


g260108

**Figure 28**

1. 1.5 mm (1/16 inch)
2. Frame
3. Auger clutch arm

4. If the auger/impeller cable is not properly adjusted, do the following steps:
5. Loosen the jam nut (Figure 29).

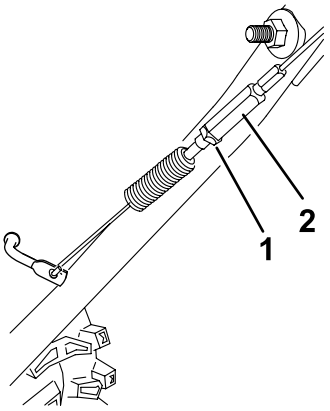


g260109

**Figure 29**

1. Jam nut
2. Turnbuckle

6. Loosen or tighten the turnbuckle that adjusts the tension on the cable (Figure 29).
7. Adjust the turnbuckle until you obtain the proper gap.
8. Tighten the jam nut.
9. Insert the 2 screws that you previously removed on the belt cover.
10. If the auger/impeller cable is properly adjusted but a problem remains, contact an Authorized Service Dealer.

# Checking the Auger-Gearbox-Oil Level

**Service Interval:** Yearly—Check the auger-gearbox oil and add oil if necessary.

1. Move the machine to a level surface.
2. Clean the area around the pipe plug and remove the pipe plug from the gearbox (Figure 30).

   **Note:** If needed, use pliers to assist in removing the pipe plug.

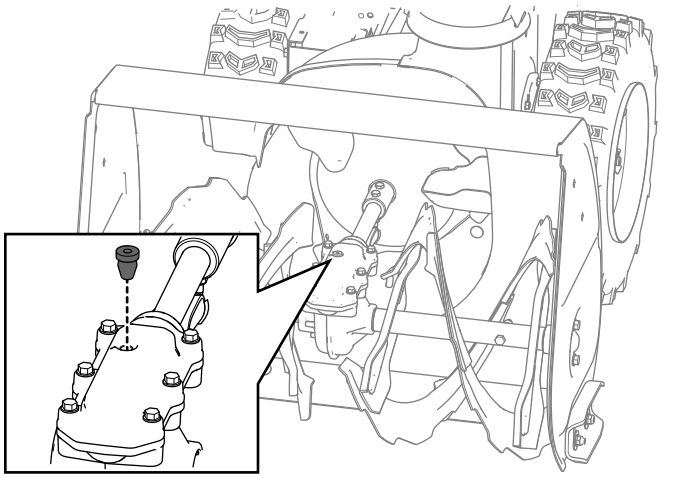

g257725

**Figure 30**

3. Check the oil level using a suitable measuring device, such as a clean cable tie. The oil should be approximately 3.8 cm (1.5 inches) below the filler opening (Figure 31).

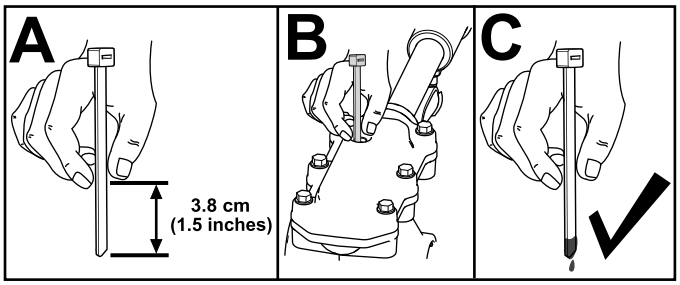


g257737

**Figure 31**

4. If the oil level is low, add GL-5 or GL-6, SAE 85-95 EP gear oil lubricant to the gearbox, then check the oil level again.

   **Note:** Do not use synthetic oil.
5. Install the pipe plug in the gearbox.

# Changing the Engine Oil

**Service Interval:** After the first 5 hours—Change the engine oil.

Every 50 hours—Change the engine oil. Change the engine oil every 25 operating hours when operating the engine under a heavy load.

If possible, run the engine for a few minutes before changing the oil because warm oil flows better and carries more contaminants.

| | |
|---|---|
| **Engine oil capacity** | 0.95 L (32 fl oz) |
| **Oil viscosity** | Refer to Figure 32. |
| **API service classification** | SJ or higher |

Use Figure 32 below to select the best oil viscosity for the outdoor temperature range expected:

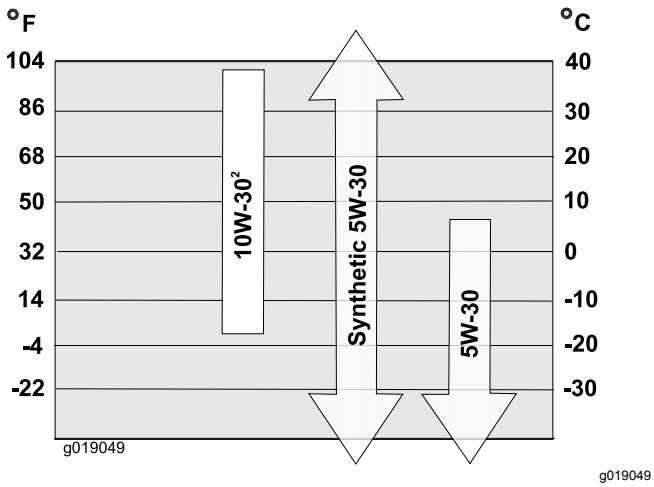


Figure 32

1. Clean the area around the oil-drain cap (Figure 33).

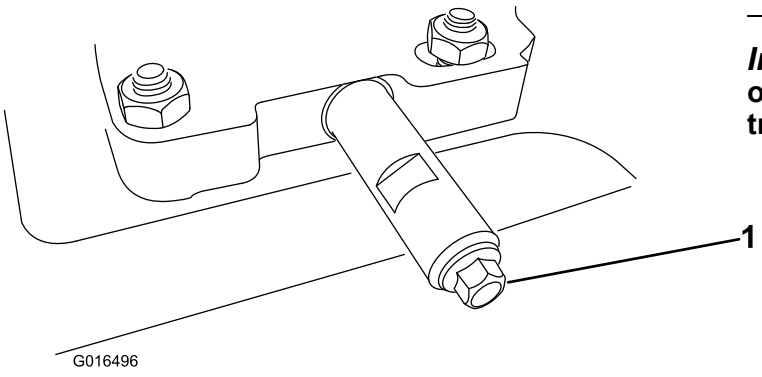


Figure 33

1. Oil-drain plug

2. Slide an oil-drain pan under the drain extension and remove the oil-drain plug.

   **Note:** When removing the plug, ensure that the tube does not loosen.

3. Drain the oil.

   **Note:** Dispose of the used oil properly at a local recycling center.

4. Install the oil-drain plug.
5. Fill the crankcase with oil.

# Lubricating the Hex Shaft

**Service Interval:** Yearly—Lubricate the hex shaft.

Lightly lubricate the hex shaft yearly with automotive engine oil (Figure 34).

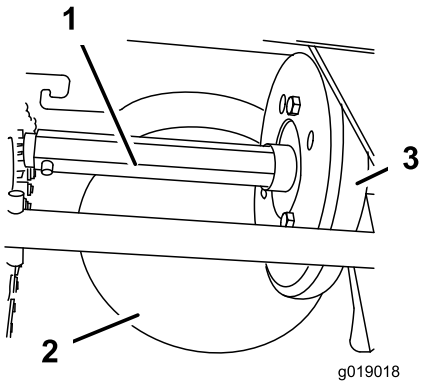


Figure 34

1. Hex shaft
2. Aluminum friction plate
3. Rubber wheel

***Important:*** **Do not get oil on the rubber wheel or the aluminum friction drive plate because the traction drive will slip (Figure 34).**

1. Drain the fuel from the fuel tank.
2. Tip the machine forward onto its auger housing and block it so that it cannot fall.
3. Remove the back cover (Figure 35).

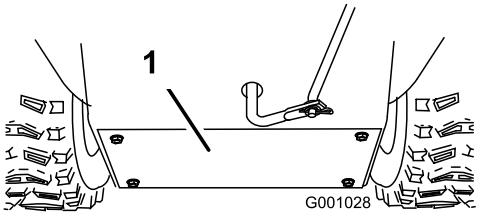


Figure 35

1. Back cover

4. Move the speed-selector lever to Position R2.
5. Dip your finger in automotive engine oil and **lightly** lubricate hex shaft.
6. Move the speed-selector lever to Position 6.
7. Lubricate the other end of the hex shaft.
8. Move the speed-selector lever forward and rearward a few times.
9. Install the back cover and return the machine to the operating position.

# Replacing the Spark Plug

**Service Interval:** Every 100 hours—Replace the spark plug.

**⚠ WARNING**

**Replacing the spark plug while the engine is hot can result in burns.**

**Wait until the engine is cool to replace the spark plug.**

Use a Toro spark plug or equivalent (Champion® RN9YC or NGK BPR6ES).

1. Remove the boot (Figure 36).

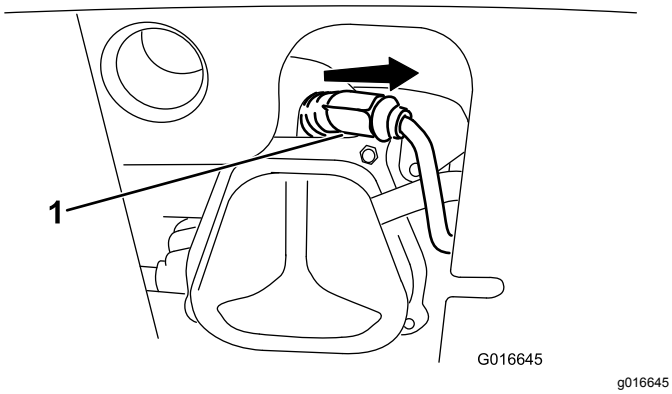


**Figure 36**

1. Spark-plug boot

2. Clean around the base of the spark plug.

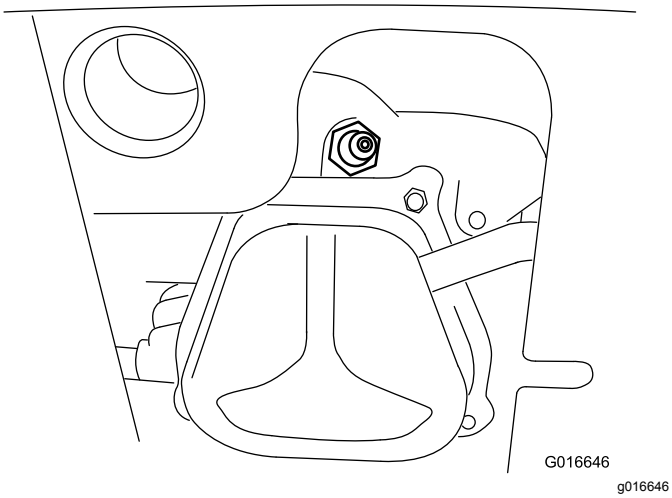


**Figure 37**

3. Remove and discard the old spark plug.

   **Note:** You will need a ratchet wrench extension to remove the spark plug.

4. Set the gap between the electrodes on a new spark plug at 0.76 mm (0.030 inch) as shown in Figure 38.

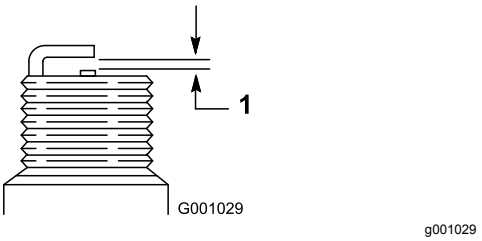


**Figure 38**

1. 0.76 mm (0.030 inch)

5. Install the new spark plug, tighten it firmly, and attach the ignition wire to the spark plug.

   **Note:** Ensure that the ignition wire snaps completely into place on the spark plug.

# Replacing the Drive Belts

If the auger/impeller drive belt or the traction-drive belt becomes worn, oil-soaked, or otherwise damaged, have an Authorized Service Dealer replace the belt.

# Replacing the Headlight

Replace the headlight assembly (Toro part number 138-0670) when needed.

1. Remove the headlight wire from the back of the headlight (A of Figure 39).
2. Remove the bolt and nut holding the headlight assembly onto the headlight bracket and then remove the old headlight assembly (B of Figure 39).
3. Secure the new headlight assembly onto the headlight bracket with the previously removed nut and bolt (C of Figure 39).
4. Insert the headlight wire straight into the back of the headlight until it is securely in place (D of Figure 39).

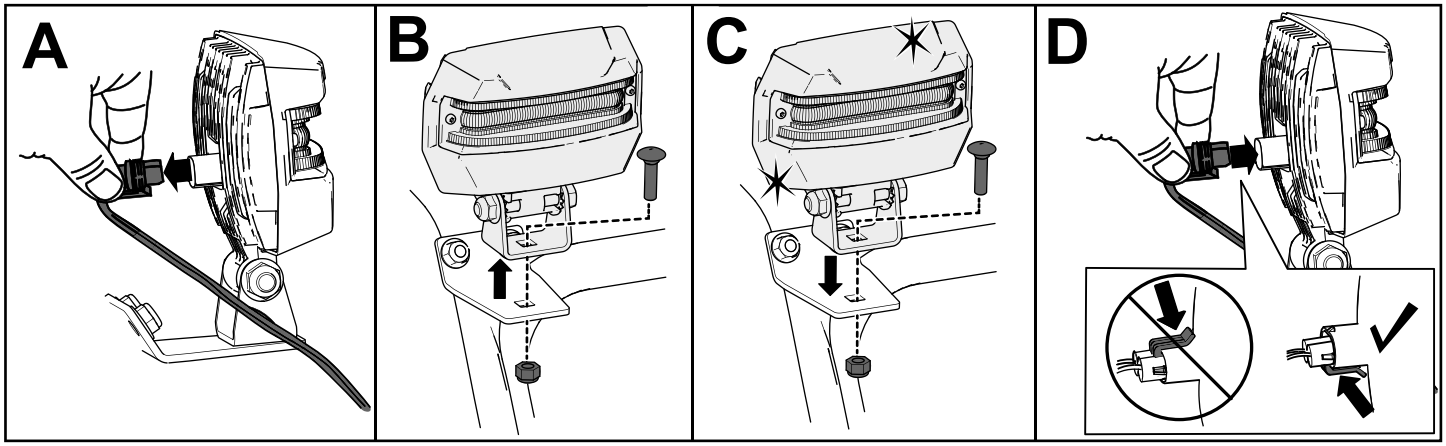


**Figure 39**

# Storage

## Storing the Machine

1. On the last refueling of the year, add fuel stabilizer to fresh fuel as directed by the fuel stabilizer manufacturer.

   ***Important:*** **Do not store fuel longer than that suggested by the fuel stabilizer manufacturer.**
2. Run the engine for 10 minutes to distribute the conditioned fuel through the fuel system.
3. Run the machine until the engine runs out of fuel.
4. Prime the engine and start it again.
5. Allow the engine to run until it shuts off. When you can no longer start the engine, it is sufficiently dry.
6. Allow the engine to cool.
7. Remove the ignition key.
8. Clean the machine thoroughly.
9. Touch up chipped surfaces with paint available from an Authorized Service Dealer. Sand affected areas before painting, and use a rust preventative to prevent the metal parts from rusting.
10. Tighten all loose screws, bolts, and locknuts. Repair or replace any damaged parts.
11. Cover the machine and store it in a clean, dry place out of the reach of children.

## Removing the Machine from Storage

Perform the annual maintenance procedures as given in the Recommended Maintenance Schedule; refer to Maintenance (page 17).

# Troubleshooting

| Problem | Possible Cause | Corrective Action |
|---|---|---|
| The electric starter does not turn (electric-start models only). | 1. The power cord is disconnected at the outlet or the machine.<br>2. The power cord is worn, corroded, or damaged.<br>3. The power outlet is not energized. | 1. Connect the power cord to the outlet and/or the machine.<br>2. Replace the power cord.<br>3. Have a qualified electrician energize the outlet. |
| The engine does not start or starts hard. | 1. The key is not in the ignition or is in the STOP position.<br>2. The choke is in the OFF position and the primer has not been pressed.<br>3. The fuel-shutoff valve is not open.<br>4. The throttle is not in the FAST position.<br>5. The fuel tank is empty or the fuel system contains stale fuel.<br>6. The spark-plug wire is loose or disconnected.<br>7. The spark plug is pitted, fouled, or the gap is incorrect.<br>8. The fuel-vent cap is restricted.<br>9. The engine-oil level in the engine crankcase is too low or too high. | 1. Insert the key into the ignition and turn it to the ON position.<br>2. Move the choke to the ON position and press the primer 3 times.<br>3. Open the fuel-shutoff valve.<br>4. Move the throttle to the FAST position.<br>5. Drain and/or fill the fuel tank with fresh fuel (not more than 30 days old). If the problem persists, contact an Authorized Service Dealer.<br>6. Connect the wire to the spark plug.<br>7. Check the spark plug and adjust the gap if necessary. Replace the spark plug if it is pitted, fouled, or cracked.<br>8. Remove the vent restriction or replace the fuel cap.<br>9. Add or drain oil to adjust the oil level in the engine crankcase to the Full mark on the dipstick. |
| The engine runs rough. | 1. The choke is in the ON position.<br>2. The fuel-shutoff valve is not completely open.<br>3. The fuel tank is nearly empty or contains stale fuel.<br>4. The spark-plug wire is loose.<br>5. The spark plug is pitted, fouled, or the gap is incorrect.<br>6. The engine-oil level in the engine crankcase is too low or too high. | 1. Move the choke to the OFF position.<br>2. Open the fuel-shutoff valve.<br>3. Drain and fill the fuel tank with fresh fuel (not more than 30 days old). If the problem persists, contact an Authorized Service Dealer.<br>4. Connect the wire to the spark plug.<br>5. Check the spark plug and adjust the gap if necessary. Replace the spark plug if it is pitted, fouled, or cracked.<br>6. Add or drain oil to adjust the oil level in the engine crankcase to the Full mark on the dipstick. |

| Problem | Possible Cause | Corrective Action |
|---|---|---|
| The engine runs, but the machine discharges snow poorly or not at all. | 1. The throttle is not in the FAST position when throwing snow. | 1. Move the throttle to the FAST position. |
| | 2. The machine is moving too fast to clear the snow. | 2. Shift the machine into a lower gear. |
| | 3. You are trying to remove too much snow per swath. | 3. Reduce the amount of snow removed per swath. |
| | 4. You are trying to remove extremely heavy or wet snow. | 4. Do not overload the machine with extremely heavy or wet snow. |
| | 5. The discharge chute is plugged. | 5. Unclog the discharge chute. |
| | 6. The auger/impeller drive belt is loose or is off the pulley. | 6. Install and/or adjust the auger/impeller drive belt; refer to www.Toro.com for servicing information or take the machine to an Authorized Service Dealer. |
| | 7. The auger/impeller drive belt is worn or broken. | 7. Replace the auger/impeller drive belt; refer to www.Toro.com for servicing information or take the machine to an Authorized Service Dealer. |
| The discharge chute either does not lock into place or does not move. | 1. The discharge-chute latch is not properly adjusted. | 1. Adjust the discharge-chute latch. |
| The machine does not properly clear the snow off the surface. | 1. The skids and/or scraper are not properly adjusted. | 1. Adjust the skids and/or the scraper. |
| | 2. The pressure in the tires is not equal. | 2. Check and adjust the pressure in 1 or both tires. |

# Notes:

## European Privacy Notice

The Information Toro Collects
Toro Warranty Company (Toro) respects your privacy. In order to process your warranty claim and contact you in the event of a product recall, we ask you to share certain personal information with us, either directly or through your local Toro company or dealer.

The Toro warranty system is hosted on servers located within the United States where privacy law may not provide the same protection as applies in your country.

BY SHARING YOUR PERSONAL INFORMATION WITH US, YOU ARE CONSENTING TO THE PROCESSING OF YOUR PERSONAL INFORMATION AS DESCRIBED IN THIS PRIVACY NOTICE.

The Way Toro Uses Information
Toro may use your personal information to process warranty claims, to contact you in the event of a product recall and for any other purpose which we tell you about. Toro may share your information with Toro's affiliates, dealers or other business partners in connection with any of these activities. We will not sell your personal information to any other company. We reserve the right to disclose personal information in order to comply with applicable laws and with requests by the appropriate authorities, to operate our systems properly or for our own protection or that of other users.

Retention of your Personal Information
We will keep your personal information as long as we need it for the purposes for which it was originally collected or for other legitimate purposes (such as regulatory compliance), or as required by applicable law.

Toro's Commitment to Security of Your Personal Information
We take reasonable precautions in order to protect the security of your personal information. We also take steps to maintain the accuracy and current status of personal information.

Access and Correction of your Personal Information
If you would like to review or correct your personal information, please contact us by email at legal@toro.com.

## Australian Consumer Law

Australian customers will find details relating to the Australian Consumer Law either inside the box or at your local Toro Dealer.




**Count on it.**