Form No. 3425-393 Rev A

# X25 GeoLink® Precision Spray System Finishing Kit

## Serial Number 315000001 and After Multi Pro® 1750 Turf Sprayer

**Model No. 41631—Serial No. 400000000 and Up**

**Installation Instructions**

# Introduction

The GeoLink™ spray system kit is an attachment for a turf spray application vehicle and is intended to be used by professional, hired operators in commercial applications. It is designed primarily for spraying on well-maintained lawns in parks, golf courses, sports fields, and on commercial grounds.

Visit www.Toro.com for more product safety information, including safety tips, training materials, accessory information, help finding a dealer, or to register your product.

Using this product for purposes other than its intended use could prove dangerous to you and bystanders.

**Note:** Read this information carefully to learn how to operate and maintain your product properly and to avoid injury and product damage. You are responsible for operating the product properly and safely.

Whenever you need service, genuine Toro parts, or additional information, contact an Authorized Service Dealer or Toro Customer Service and have the model and serial numbers of your product ready. Figure 1 identifies the location of the model and serial numbers on the product. Write the numbers in the space provided.

***Important:*** **With your mobile device, you can scan the QR code (if equipped) on the serial number plate to access warranty, parts, and other product information.**

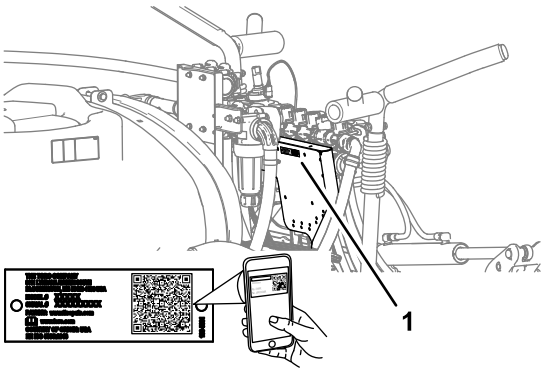


g264687

**Figure 1**

1. Model and serial number location

**Model No.** _____

**Serial No.** _____

This manual identifies potential hazards and has safety messages identified by the safety-alert symbol (Figure 2), which signals a hazard that may cause serious injury or death if you do not follow the recommended precautions.



g000502

**Figure 2**

1. Safety-alert symbol

This manual uses 2 words to highlight information. **Important** calls attention to special mechanical information and **Note** emphasizes general information worthy of special attention.

© 2018—The Toro® Company
8111 Lyndale Avenue South
Bloomington, MN 55420

Register at www.Toro.com.

CE

Original Instructions (EN)
Printed in the USA
All Rights Reserved

*3425-393* A

# Contents


Introduction ..... 1
Safety ..... 3
Safety and Instructional Decals ..... 3
Setup ..... 5
1 Preparing to Install the Kit ..... 8
2 Removing the Seat and the Engine-Access Panel ..... 10
3 Removing the Left and Right Front Fenders and the Hood ..... 11
4 Disconnecting the Optional Foam-Marker Kit ..... 13
5 Disconnecting the Optional Ultra Sonic Boom Leveling Kit ..... 17
6 Removing the Center-Section Cover (11-nozzle) of the Optional Covered-Boom Kit ..... 18
7 Disconnecting the Pressure-Sense Tube for the Dash Gauge ..... 19
8 Disconnecting the Sprayer Valve Connectors ..... 19
9 Removing the Rate-Control Switch ..... 20
10 Removing the Spray Sections ..... 21
11 Installing the Center-Boom Extension ..... 26
12 Installing the Mount Brackets and Sprayer Nozzles to the Center-Spray Section ..... 29
13 Removing the Boom-Section Valves ..... 31
14 Installing the Flow Meter Support Clamps ..... 35
15 Assembling the Wire Harness to the Machine ..... 37
16 Assembling the Flow-Meter Manifold ..... 42
17 Installing the Bypass Hoses to the Tank ..... 43
18 Installing the Modified Center-Spray Section ..... 45
19 Assembling the Lift Cylinder Manifold to the Cylinder Mount ..... 46
20 Installing the Valve Mount and Sprayer Valves ..... 47
21 Assembling the Boom-Lift Cylinders ..... 54
22 Installing the Outer-Spray Sections ..... 56
23 Installing the Sprayer-Nozzle Hoses ..... 58
24 Connecting the Kit Wire Harness at the Back of the Machine ..... 63
25 Connecting the Pressure-Sense Tube for the Dash Gauge ..... 64
26 Connecting the Optional Foam-Marker Kit ..... 65
27 Connecting the Optional Ultra Sonic Boom Kit ..... 68
28 Assembling the Optional Covered-Boom Kit ..... 69
29 Installing the Navigation Receiver ..... 72
30 Installing the Sprayer Monitor ..... 75
31 Wiring the Spray Pump Clutch ..... 77
32 Installing Components for the Sprayer Electrical System ..... 78
33 Connecting the Kit Wire Harness at the Seat Base ..... 84
34 Installing the Wire Harnesses for the Navigation Components ..... 87
35 Installing the Hood and the Left and Right Front Fenders ..... 96
36 Installing the Engine-Access Panel and the Seat ..... 98
37 Programming the Machine Settings ..... 100

# Safety

**⚠ WARNING**

**Chemical substances used in the spray system may be hazardous and toxic to you, bystanders, animals, plants, soils, or other property.**

- **Carefully read and follow the chemical warning labels and safety data sheet (SDS) for all chemicals used and protect yourself according to the chemical manufacturer's recommendations. For example, use appropriate personal protective equipment (PPE), including face and eye protection, gloves, or other equipment to guard against personal contact with a chemical.**
- **There may be more than 1 chemical used and information on each chemical; assess each chemical.**
- **Refuse to operate or work on the sprayer if this information is not available.**
- **Before working on a spray system, ensure that the system has been triple rinsed and neutralized according to the recommendations of the chemical manufacturer(s) and that all the valves are cycled 3 times.**
- **Verify that there is an adequate supply of clean water and soap nearby, and immediately wash off any chemicals that contact you.**

# Safety and Instructional Decals

Safety decals and instructions are easily visible to the operator and are located near any area of potential danger. Replace any decal that is damaged or missing.

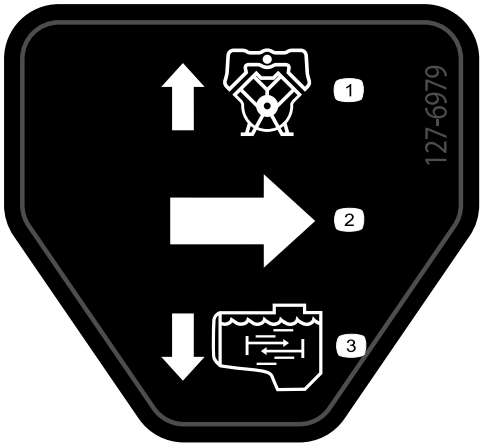


decal127-6979

**127-6979**

1. Pump-return flow
2. Flow
3. Agitation flow

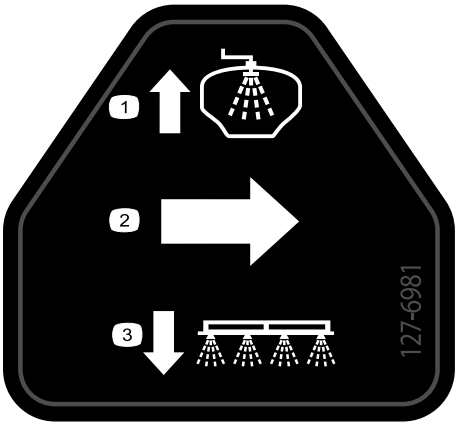


decal127-6981

**127-6981**

1. Bypass-return flow
2. Flow
3. Boom spray

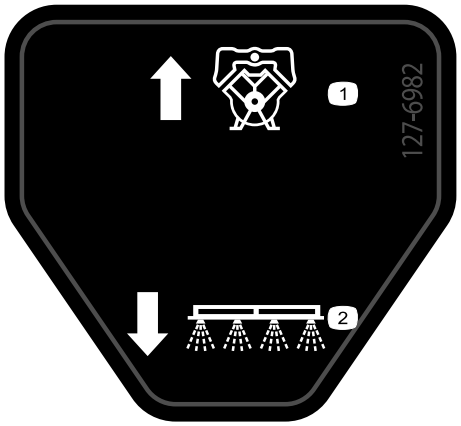


decal127-6982

**127-6982**

1. Bypass-return flow
2. Boom spray

---




decal127-6976

**127-6976**

1. Decrease
2. Increase

---

# Installation

## Loose Parts

Use the chart below to verify that all parts have been shipped.

| Procedure | Description | Qty. | Use |
|---|---|---|---|
| 1 | No parts required | – | Prepare to install the kit. |
| 2 | No parts required | – | Remove the seat and the engine access panel. |
| 3 | No parts required | – | Remove the left and right front fenders and the hood. |
| 4 | Tube assembly—Toro Part No. 114-9553<br>Cable tie | 2<br>8 | Disconnect the optional foam-marker kit. |
| 5 | No parts required | – | Disconnecting the optional ultra sonic boom leveling kit. |
| 6 | No parts required | – | Remove the center-section cover (11-nozzle) of the optional covered-boom kit. |
| 7 | No parts required | – | Disconnecting the pressure-sense tube for the dash gauge. |
| 8 | No parts required | – | Disconnect the sprayer valve connectors. |
| 9 | Cable tie<br>Switch plug | 1<br>1 | Remove the rate-control switch. |
| 10 | No parts required | – | Remove the spray sections. |
| 11 | Flange-head bolt (3/8 x 1 inch)<br>Flange locknuts (3/8 inch)<br>Center-boom extension<br>Cylinder mount (wide)<br>Tie plate (wide)<br>Carriage bolt (1/2 x 1-1/4 inches)<br>Flange locknut (1/2 inch) | 2<br>2<br>1<br>1<br>1<br>4<br>4 | Install the center boom extension. |
| 12 | Sprayer nozzle<br>Hose assembly (sprayer valve 5 or 6)<br>Flange locknut (5/16 inch) | 2<br>2<br>2 | Install the mount brackets and sprayer nozzles to the center-spray section. |
| 13 | Cap (quick coupler)<br>Retainer | 3<br>3 | Remove the boom-section valves. |
| 14 | Flow meter mount<br>Support-clamp half<br>Bolt (1/4 x 4-1/2 inches)<br>Flange locknuts (1/4 inch) | 1<br>4<br>4<br>4 | Installing the flow meter support clamps. |
| 15 | Rear wire harness<br>Cable tie | 1<br>7 | Assemble the rear wire harness to the machine. |

| Procedure | Description | Qty. | Use |
|---|---|---|---|
| **16** | Straight hose barb (1 x 2 inches)<br>Hose clamp (3/4 to 1-1/2 inches)<br>Hose (1 x 5-3/4 inches)<br>Manifold<br>Hose (1 x 16 inches) | 1<br>3<br>1<br>1<br>1 | Assemble the manifold to the flow meter. |
| **17** | 90° quick-connect fitting (socket—1 inch)<br>Hose (1 x 26 inches)<br>Hose clamp (3/4 x 1-1/5 inches)<br>T-fitting (1 x 1 x 1 inch)<br>90° barbed fitting and hose assembly<br>Shutoff valve | 2<br>2<br>5<br>1<br>1<br>1 | Install the bypass hoses to the tank. |
| **18** | No parts required | – | Install the modified center-spray section. |
| **19** | No parts required | – | Assembling the lift cylinder manifold to the cylinder mount. |
| **20** | Valve mount and sprayer-valve assembly<br>Bolt (4 x 10 mm)<br>ASC 10 sprayer controller<br>Flange locknut (4 mm)<br>Cap (quick-disconnect fitting)<br>Flange-head bolts (5/16 x 3/4 inch)<br>Flange locknuts (5/16 inch)<br>Hose clamp<br>Push-in fastener (cable tie)<br>Push-in fastener (connector anchor) | 1<br>3<br>1<br>3<br>2<br>8<br>8<br>1<br>1<br>3 | Install the valve mount and valves. |
| **21** | Hydraulic hose (1/4 x 24-3/4 inches) | 4 | Assemble the boom-lift cylinders. |
| **22** | Nylon-flange bushing<br>Cable tie<br>Supply-hose assembly 188 cm (74 inches)<br>Supply-hose assembly 234 cm (92 inches)<br>Supply-hose assembly 279 cm (110 inches) | 4<br>1<br>1<br>1<br>1 | Install the outer-spray sections. |
| **23** | Supply-hose 279 cm (110 inches)<br>Supply-hose 234 cm (92 inches)<br>Supply-hose 188 cm (74 inches)<br>Supply-hose 81 cm (32 inches) | 2<br>2<br>4<br>2 | Install the sprayer nozzle hoses. |
| **24** | No parts required | – | Connect the rear wire harness. |
| **25** | No parts required | – | Connect the pressure-sense tube for the dash gauge. |
| **26** | Cable tie | 6 | Connect the optional foam-marker kit. |
| **27** | No parts required | – | Connect the ultra sonic boom kit. |

| Procedure | Description | Qty. | Use |
|---|---|---|---|
| **28** | Cover extension assembly (12-nozzle—Toro 120-0621) | 1 | Assemble the optional covered-boom kit. |
| | Pop rivet (Toro Part No. 114439) | 22 | |
| | Support bracket (center-section cover—Toro Part No. 131-3703-03) | 4 | |
| | Clip nut (Toro Part No. 94-2413) | 4 | |
| | Flange-head bolts (3/8 x 1-1/4 inches—Toro Part No. 110-5050) | 16 | |
| | Flange locknuts (3/8 inch—Toro Part No. 104-8301) | 16 | |
| | Cover strap (Toro Part No. 120-0629) | 2 | |
| | Flange-head bolts (5/16 x 1-1/4 inches—Toro Part No. 323-36) | 4 | |
| **29** | Receiver plate | 1 | Install the navigation receiver. |
| | Spacer (3/8 x 1 inch) | 1 | |
| | Receiver mount | 1 | |
| | Bolt (3/8 x 3-1/4 inches) | 1 | |
| | Lock washer (3/8 inch) | 1 | |
| | Washer (3/8 x 13/16 inch) | 1 | |
| | Flange locknut (3/8 inch) | 1 | |
| | Flange-head bolt (5/16 x 3/4 inch) | 1 | |
| | Flange locknut (5/16 inch) | 1 | |
| | Flange-head bolt (3/8 x 1-1/2 inches) | 2 | |
| | Spacer (3/8 x 7/16 inch) | 2 | |
| | Navigation receiver—X25 GeoLink Precision Spray System Kit, Base, WAAS (Model 41630) | 1 | |
| | Hex-head bolt (5 x 16 mm) | 3 | |
| | Washer (5 mm) | 3 | |
| | Bulkhead adapter (optional CDMA RTK correction modem kit or GSM RTK correction modem kit) | 1 | |
| | Cellular antenna (optional CDMA RTK correction modem kit or GSM RTK correction modem kit) | 1 | |
| | Coaxial cable (optional CDMA RTK correction modem kit or GSM RTK correction modem kit) | 1 | |
| **30** | Monitor mount | 1 | Install the sprayer monitor. |
| | Flange-head bolt (6 x 12 mm) | 3 | |
| | U-bolt (5/16 inch) | 2 | |
| | Flange locknut (5/16 inch) | 8 | |
| | Ball mount | 1 | |
| | Flange-head bolt (5/16 x 3/4 inch) | 4 | |
| | Monitor—X25 GeoLink Precision Spray System Kit, Base, WAAS (Model 41630) | 1 | |
| | Monitor Arm—X25 GeoLink Precision Spray System Kit, Base, WAAS (Model 41630) | 1 | |
| **31** | No parts required | – | Wire the spray pump clutch. |

| Procedure | Description | Qty. | Use |
|---|---|---|---|
| **32** | Battery bracket | 1 | Install the sprayer electrical system. |
| | Bolt (5/16 x 1-3/4 inches) | 1 | |
| | Washer (5/16 inch) | 1 | |
| | Battery (540 A) | 1 | |
| | Battery retainer | 1 | |
| | Flange locknut (5/16 inch) | 1 | |
| | Alternator bracket | 1 | |
| | Drive pulley 279 mm (11 inch) | 1 | |
| | Bolt (1/4 x 2-1/4 inches) | 4 | |
| | Lock washer (1/4 inch) | 4 | |
| | Alternator (60 A) | 1 | |
| | Flange-head bolt (8 x 25 mm) | 1 | |
| | Flange-head bolt (3/8 x 1-1/2 inches) | 1 | |
| | V-belt | 1 | |
| **33** | Relay | 1 | Connect the kit wire harness at the seat base. |
| | Push-in fastener | 1 | |
| | Fuse (15 A) | 1 | |
| | Fuse (50 A) | 1 | |
| **34** | Data Harness (navigation system)—GeoLink precision-spray-system kit (Model 41630) | 1 | Install the wire harnesses for the navigation components. |
| | Battery Harness (navigation system)—GeoLink precision-spray-system kit (Model 41630) | 1 | |
| | Cable tie | 8 | |
| | Quick-connect clamp (red handle) | 1 | |
| | Quick-connect clamp (black handle) | 1 | |
| **35** | Push-in fastener | 13 | Install the hood and the left and right front fenders. |
| **36** | No parts required | – | Install the engine-access panel and the seat. |
| **37** | No parts required | – | Program the machine settings. |

**1**

# Preparing to Install the Kit

**No Parts Required**

## Preparing the Sprayer Tank and Optional Rinse Tank

1. Clean the sprayer; refer to Cleaning the Sprayer in the *Operator's Manual* for the machine.

   ***Important:*** **Completely empty the sprayer tank before installing the GeoLink Spray System Finishing Kit.**

2. **For machines with the optional tank-rinse kit, perform the following:**

   A. Pump the water from the rinse tank into the sprayer tank; refer to Operating the Rinse Kit in the *Installation Instructions* for the Tank-Rinse Kit.

   B. Drain the water from the sprayer tank; refer to Cleaning the Sprayer in the *Operator's Manual* for the machine.

3. Extend the left- and right-spray sections to the horizontal position.

4. Park the machine on a level surface, engage the parking brake, shut off the engine, and remove the key; refer to the *Operator's Manual*.

   ***Important:*** **Park the machine on a level surface before installing the GeoLink kit.**

## Disconnecting the Battery

1. Rotate the KEY SWITCH to the OFF position, and remove the key; refer to the *Operator's Manual*.
2. Unlatch the seat by pushing the seat-latch handle rearward (Figure 3).

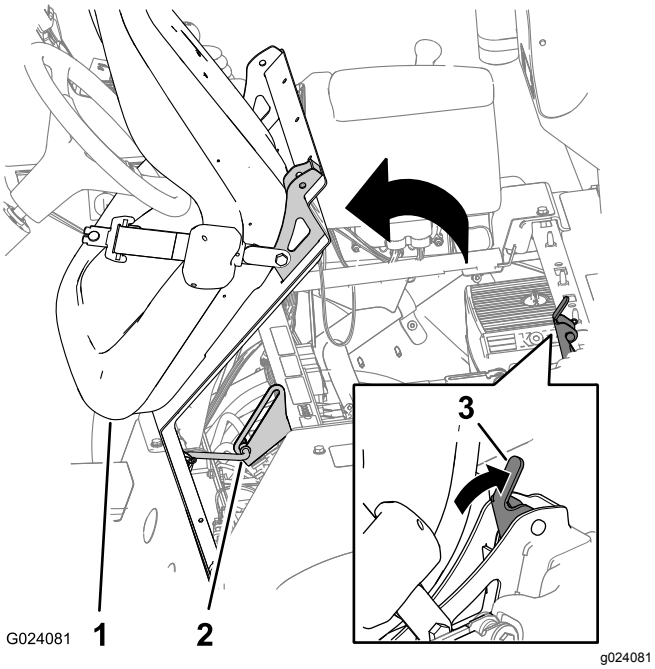


**Figure 3**

1. Seat
2. Prop rod
3. Seat-latch handle

3. Rotate the seat and seat plate forward until the end of the prop rod, at the prop-rod bracket, is at the bottom of the slot in the bracket (Figure 3).
4. Remove the bolt and nut that secures the terminal of the negative-battery cable to the negative post of the battery.

**⚠ WARNING**

**Electrical sparks can cause the battery gasses to explode, resulting in personal injury.**

**Incorrect battery cable routing could damage the sprayer and cables, causing sparks.**

- **Always disconnect the negative (black) battery cable before disconnecting the positive (red) cable.**
- **Always connect the positive (red) battery cable before connecting the negative (black) cable.**

**Battery terminals or metal tools could short against metal sprayer components, causing sparks.**

- **When removing or installing the battery, do not allow the battery terminals to touch any metal parts of the sprayer.**
- **Do not allow metal tools to short between the battery terminals and metal parts of the sprayer.**
- **Always keep the battery strap in place to protect and secure the battery.**

5. Slide back the insulator cover and remove the bolt and nut that secures the terminal of the positive-battery cable to the positive post of the battery. (Figure 4).

**Note:** Ensure that the terminals of the battery cables do not touch the battery posts.

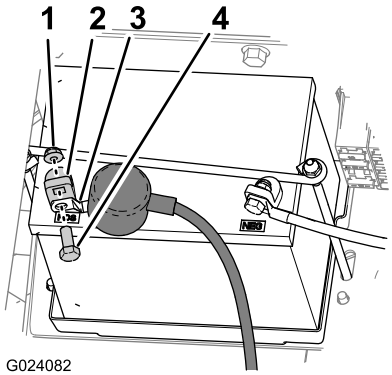


**Figure 4**

1. Nut
2. Battery post
3. Terminal (positive-battery cable)
4. Bolt

6. Allow the engine to cool completely.

# 2

# Removing the Seat and the Engine-Access Panel

**No Parts Required**

## Removing the Seat

1. Remove the 2-socket connector of the machine wire harness that connects to the seat-switch connector (Figure 5).

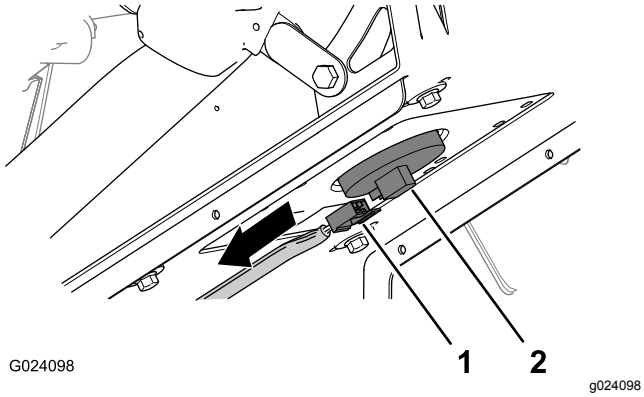


**Figure 5**

1. 2-socket connector (machine wire harness)
2. Seat-switch connector

2. Remove the hairpin that secures the prop rod to the bracket at the bottom of the seat plate (Figure 6).

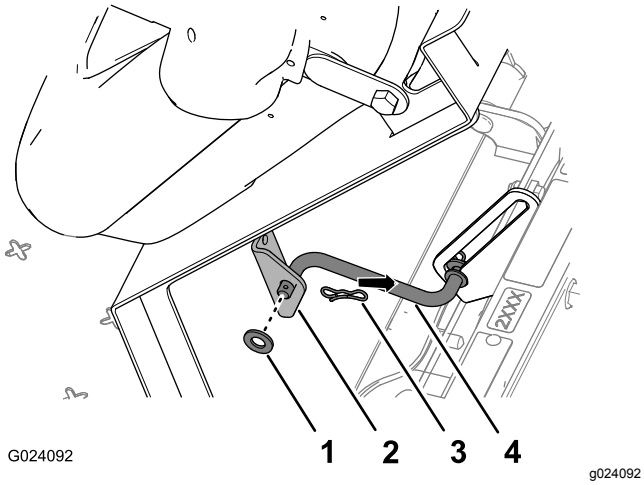


**Figure 6**

1. Washer
2. Bracket (seat)
3. Hairpin
4. Prop rod

3. Remove the 2 hairpins that secure the pivot fitting of the seat plate to the chassis brackets (Figure 7).

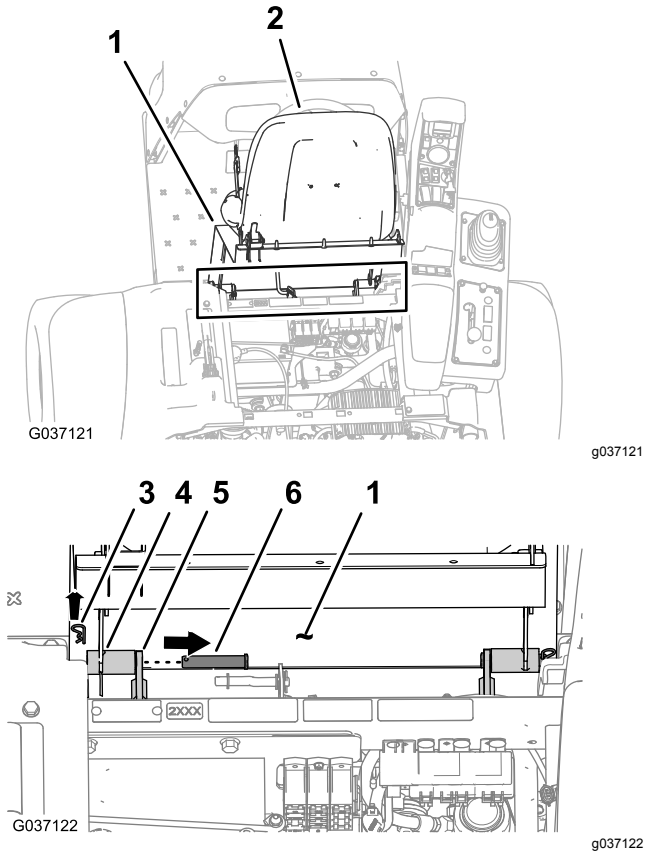


**Figure 7**

1. Seat plate
2. Seat
3. Hairpin
4. Pivot fitting (seat pan)
5. Chassis bracket
6. Pivot pin

4. Remove the 2 pivot pins that secure the seat and seat plate to the chassis (Figure 7).
5. Lift the seat and seat plate up and out of the machine (Figure 8).

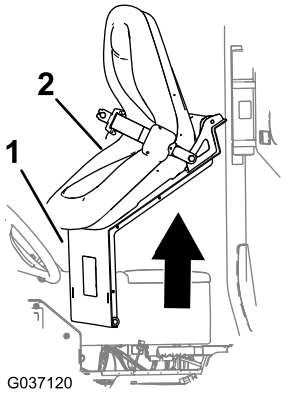


**Figure 8**

1. Seat plate
2. Seat

## Removing the Engine-Access Panel

1. Rotate up the handles for the latches of the engine-access panel (Figure 9).

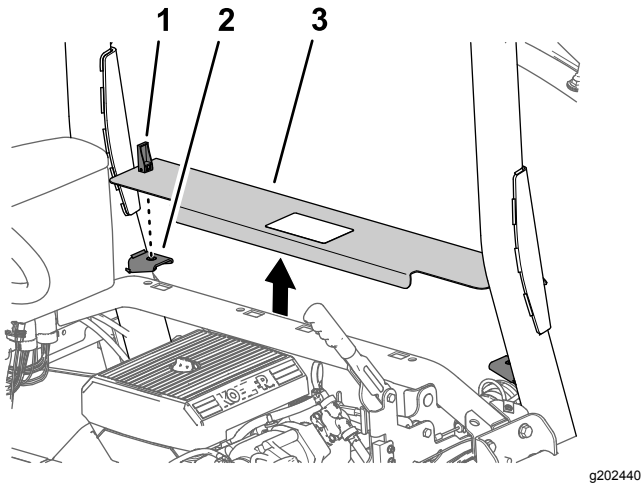


**Figure 9**

1. Latch
2. Panel-support brackets
3. Engine access panel

2. Lift the engine-access panel and remove it from the machine (Figure 9).

# 3

# Removing the Left and Right Front Fenders and the Hood

**No Parts Required**

## Removing the Left and Right Front Fenders

1. Remove the 2 push-in fastener that secure the left, front fender to the lower ROPS channel (Figure 10).

   **Note:** Discard push-in fasteners that you removed.

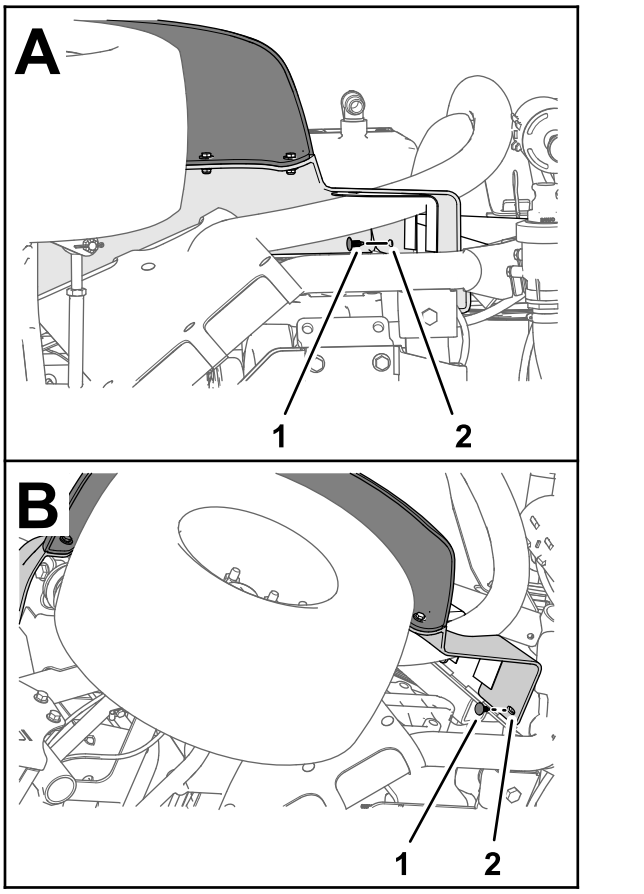


**Figure 10**

1. Push-in fastener
2. Left, front fender

2. Remove the 3 bolts (5/16 x 1 inch) and 3 washers (5/16 inch) that secure the fender to the frame of the machine (Figure 11).

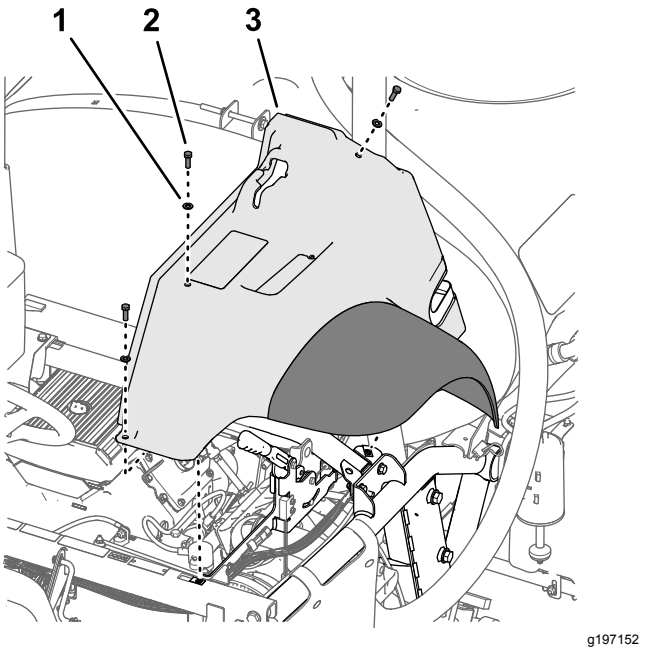


**Figure 11**

1. Washer (5/16 inch)
2. Bolt (5/16 x 1 inch)
3. Left, front fender

3. Remove the fender from the machine.

   **Note:** Discard push-in fasteners that you removed.; retain the fender, bolts, and washers for installation in Installing the Left and Right Front Fenders (page 97).

4. Remove the 6 push-in fasteners and 5 washer (9/16 x 1/2 inch) that secure the inner-fender shroud to the frame of the machine (Figure 12).

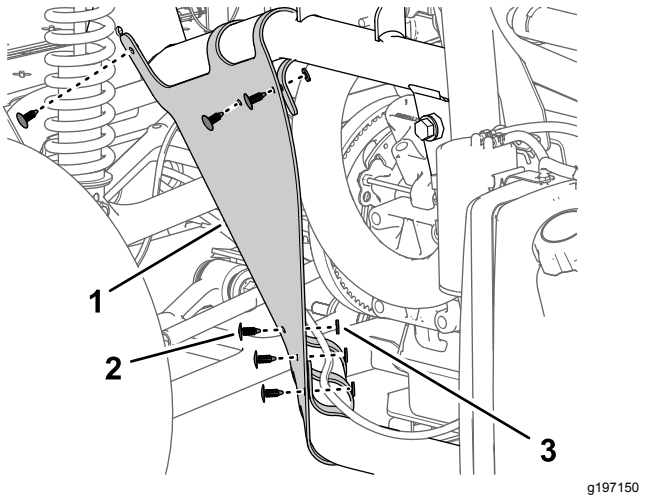


**Figure 12**

1. Inner-fender shroud
2. Push-in fastener
3. Washer (9/16 x 1/2 inch)

5. Remove the inner-fender shroud from the machine (Figure 13).

**Note:** Discard push-in fasteners that you removed.

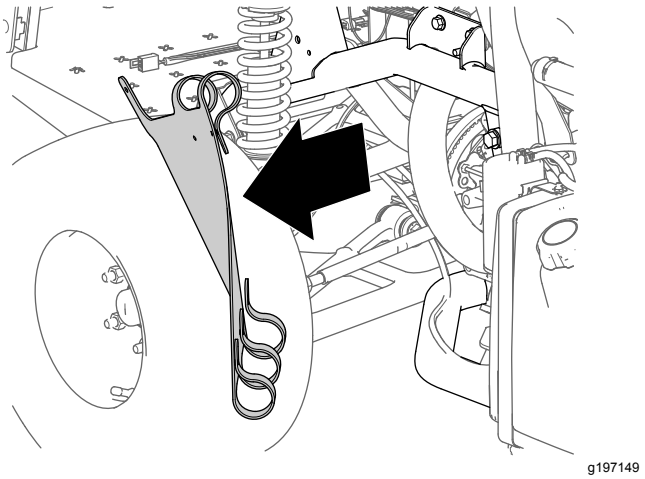


**Figure 13**

6. Repeat steps 1 through 5 for the fender and inner-fender shroud at the other side of the machine.

## Removing the Hood

1. Disconnect the 2 electrical connectors (2-socket) of the machine wire harness from the 2-pin connectors of the left and right headlights (Figure 14).

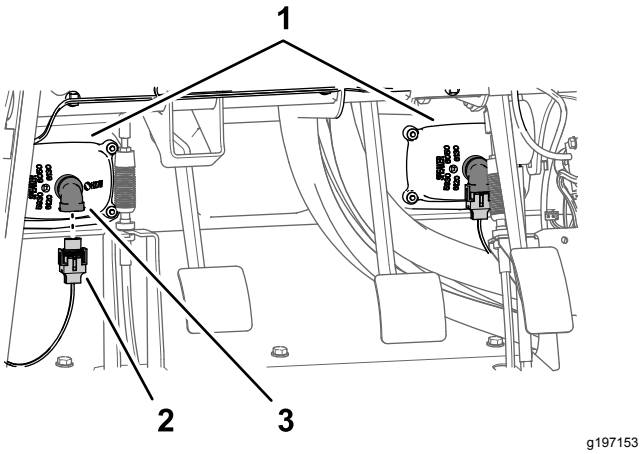


**Figure 14**

1. Headlights
2. 2-socket connector (machine wire harness)
3. 2-pin connector (headlight)

2. Remove the 9 push-in fasteners that secure the hood to the dash and frame of the machine (Figure 15).

   **Note:** Retain the push-in fasteners for installation in Installing the Hood (page 96).

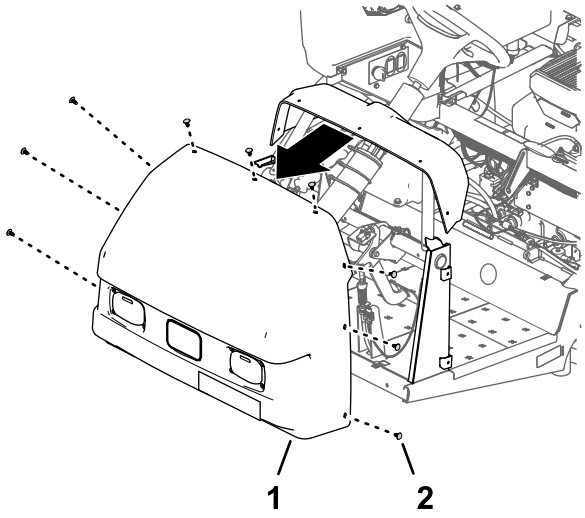


g197148

**Figure 15**

1. Hood
2. Push-in fastener

3. Remove the hood from the machine (Figure 15).

   **Note:** Discard push-in fasteners that you removed.

# 4

# Disconnecting the Optional Foam-Marker Kit

**Parts needed for this procedure:**

| | |
|---|---|
| 2 | Tube assembly—Toro Part No. 114-9553 |
| 8 | Cable tie |

## Removing the Liquid and Air Tubes at the Compressor

### Foam Marker Kits 2017 and After

1. At the connection panel of the compressor for the foam-marker kit, secure a cable tie around the clear and blue tubing for the right-spray section (Figure 16).

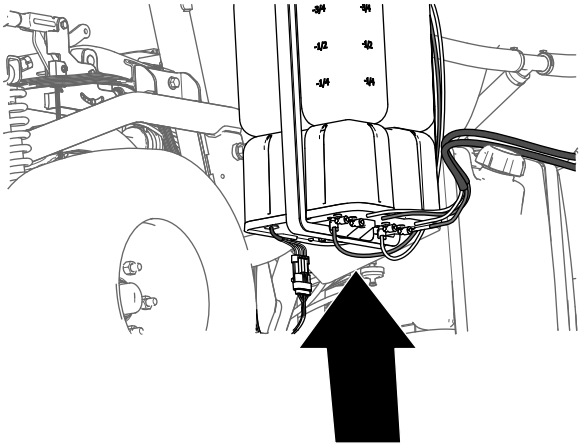

g197746

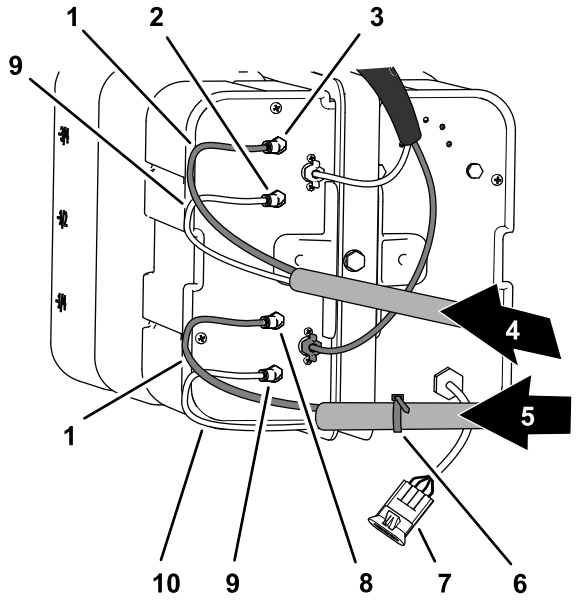


g266328

**Figure 16**

1. Blue tubes
2. Air fitting (left-spray section)
3. Liquid fitting (left-spray section)
4. Foam tubes (left-spray section)
5. Foam tubes (right-spray section)
6. Cable tie
7. Electrical connector
8. Liquid fitting (right-spray section)
9. Clear tubes
10. Air fitting (right-spray section)

2. Press in the locking collar (Figure 17).

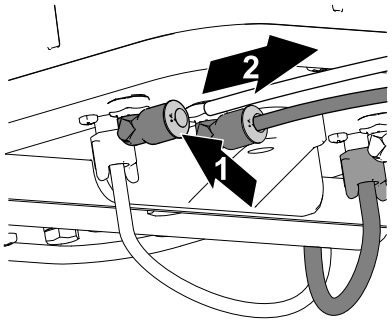


g197769

**Figure 17**

1. Push in the lock collar
2. Pull out the tube

3. Pull out the tube from the fitting (Figure 17).
4. Repeat steps 2 and 3 for the other 3 tubes for the spray sections.

# Removing the Liquid and Air Tubes at the Compressor

## Foam Marker Kits 2016 and Before

1. At the connection panel of the compressor for the foam-marker kit, secure a cable tie around the clear and blue tubing for the right-spray section (Figure 18).

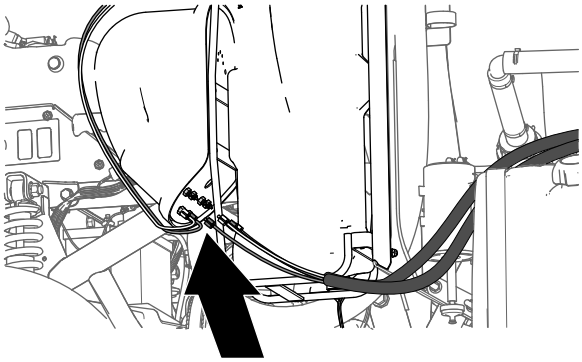

g197745

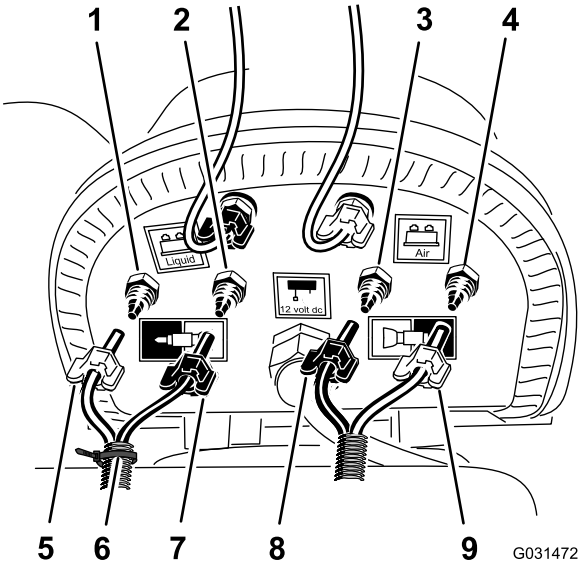


g031472

**Figure 18**

1. Air compression fitting (right-spray section)
2. Liquid compression fitting (right-spray section)
3. Liquid compression fitting (left-spray section)
4. Air compression fitting (left-spray section)
5. Compression nut—air (right-spray section—blue tube)
6. Cable tie
7. Compression nut—water (right-spray section—clear tube)
8. Compression nut (left-spray section—blue tube)
9. Compression nut (left-spray section—clear tube)

2. Loosen the compression nuts for the 2 clear and 2 blue tubes for the foam nozzles at the left- and right-spray section (Figure 18).
3. Remove the 4 tubes from the compression fittings for the spray sections (Figure 18).

# Removing the Liquid and Air Tubes to the Spray Sections

1. At the outer-spray section, use a piece of tape to mark the left liquid and air tubes for the left spray section and the right liquid and air tubes for the right spray section.
2. Move the tubes for the foam nozzles at the left- and right-spray section rearward and through the R-clamp near the pivot point for the spray section (Figure 19).

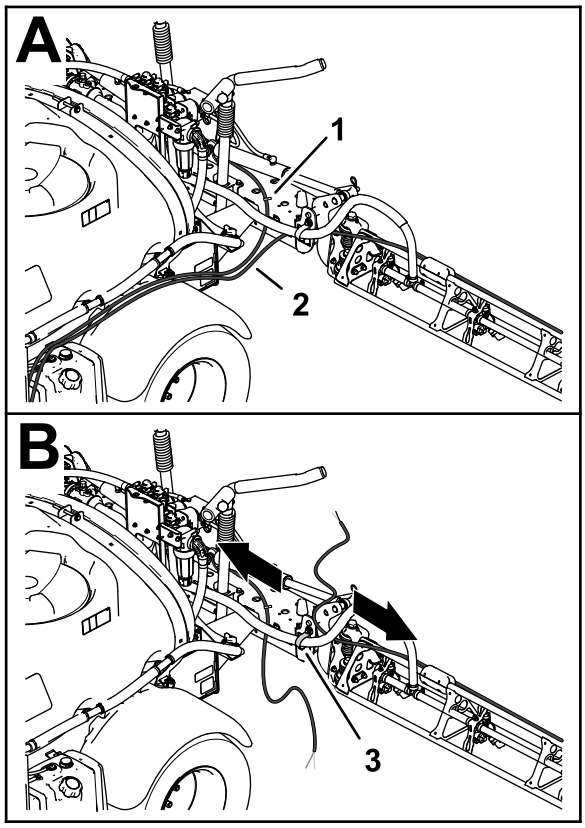


g197783

**Figure 19**

1. Tubing—foam-marker nozzle (left-spray section)
2. Tubing—foam-marker nozzle (right-spray section)
3. R-clamp

3. If your machine has the **center boom-extension kit** installed, loosely secure the free end of the liquid and air tubes to the outer-spray section. and skip the procedures for Preparing the New Tube Assemblies for the Foam-Marker Nozzles (page 15) and Installing the New Tube Assembly (page 17).

# Preparing the New Tube Assemblies for the Foam-Marker Nozzles

## Machines without the Optional Center Boom-Extension Kit

1. Remove the cable ties that secure the liquid and air tubes of the foam marker kit to the outer-spray section (Figure 20).

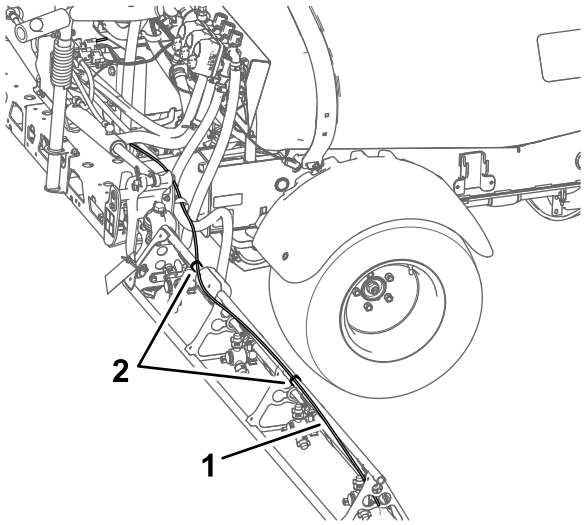


g197816

**Figure 20**

1. Liquid and air tubes (right-spray section shown)
2. Cable ties

2. At the foam-marker nozzle, loosen the compression nut that secures the blue tube (water) to the blue compression fitting of the foam-marker nozzle (Figure 21).

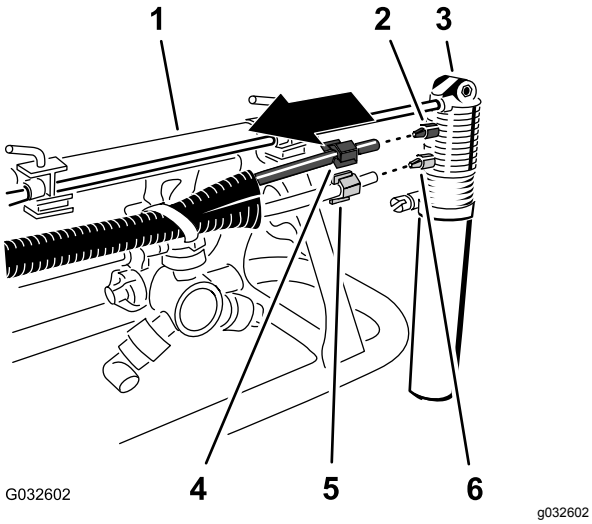


**Figure 21**

1. Outer-spray section
2. Compression fitting (blue)
3. Foam-marker nozzle
4. Compression nut (blue—blue water tube)
5. Compression nut (white—clear air tube)
6. Compression fitting (white)

3. Loosen the compression nut that secures the clear tube (air) to the white compression fitting of the foam-marker nozzle of the foam-marker nozzle (Figure 21).
4. Remove the liquid and air tubes from the machine.
5. Remove the compression nuts at the ends of the tubes (Figure 21).

   **Note:** Retain the compression nuts for installation in step 1 of Installing the New Tube Assembly (page 17).
6. Align the old liquid and air tubes (Figure 22) to the new tube assembly (Toro Part No. 114-9553).

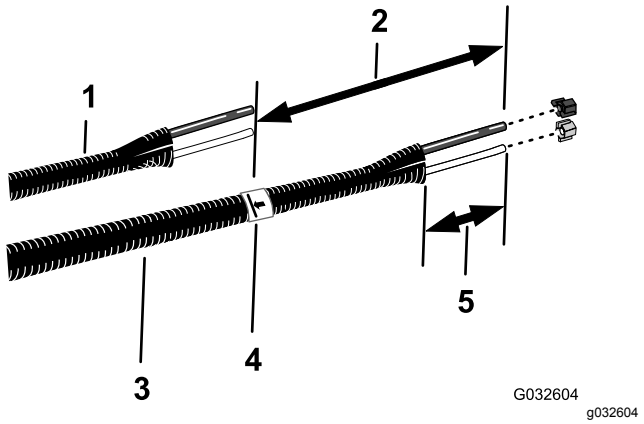


**Figure 22**

1. Old liquid and air tubes
2. 26 cm (10 inches)
3. New tube assembly (Toro Part No. 114-9553)
4. Tape and mark
5. 77 to 102 mm (3 to 4 inches)

7. Use a piece of tape to mark the length of the old liquid and air tubes onto the new tube assembly.
8. At the new tube assembly, add 26 cm (10 inches) length from the mark that you made in step 7, mark the tube assembly, and cut the tubes at the second (longer) mark (Figure 22).
9. If the old liquid and air tubes are marked with a cable tie, mark the new tube assembly with a cable tie; otherwise skip to step 10.

   **Note:** You no longer need the old liquid and air tubes.
10. Remove 77 to 102 mm (3 to 4 inches) of the sheathing from around each end of the tube assembly (Figure 22).
11. Repeat steps 1 through 10 for the liquid and air tubes at the other side of the machine.

# Installing the New Tube Assembly

## Machines without the Optional Center Boom-Extension Kit

1. Slip the blue compression nut over the ends of blue tube and the white compression nut over the clear tube (Figure 23).

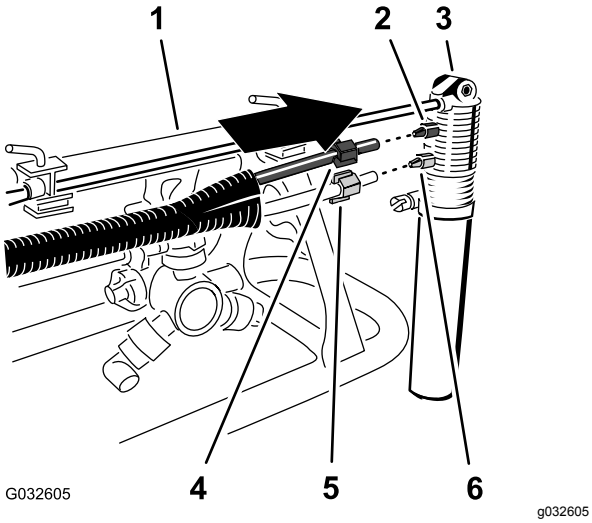


**Figure 23**

| | |
|---|---|
| 1. Outer-spray section | 4. Compression nut (blue—blue water tube) |
| 2. Compression fitting (blue) | 5. Compression nut (white—clear air tube) |
| 3. Foam-marker nozzle | 6. Compression fitting (white) |

2. Align the end of the clear tube with the white compression nut to the white fitting of the foam-marker nozzle, and tighten the compression nut by hand (Figure 23).
3. Align the end of the blue tube with the blue compression nut to the blue fitting of the foam-marker nozzle, and tighten the compression nut by hand (Figure 23).
4. Route the tube assembly along rear side of the upper support pole of the outer-spray section as shown in Figure 24.

   ***Important:*** **If the tube assembly is installed at the wrong side of the upper support pole, the tubes will be pinched between the cradle and the outer-spray section when the booms are in the transport position.**

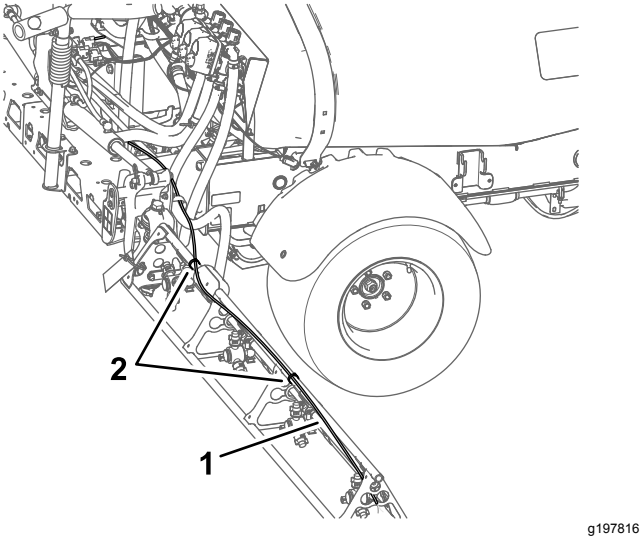


**Figure 24**

| | |
|---|---|
| 1. Tube assembly (right-spray section shown) | 2. Cable ties |

5. Secure the tube assembly to the hole in the nozzle support with a cable tie as shown in Figure 25.

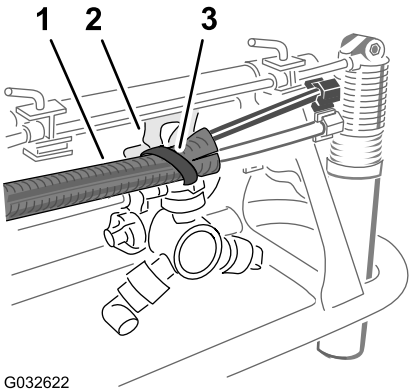


**Figure 25**

| | |
|---|---|
| 1. Tube assembly | 3. Cable tie |
| 2. Nozzle support | |

6. Secure the tube assembly to the outer-spray section with cable ties as shown in Figure 24.
7. Loosely secure the free end of the tube assembly to the outer-spray section.
8. Repeat steps 1 through 6 for the tube assembly at the other side of the machine.

# 5

# Disconnecting the Optional Ultra Sonic Boom Leveling Kit

**No Parts Required**

## Procedure

1. Disconnect 3-pin connector of the wire harness for the ultra sonic boom leveling kit from the 3-socket connector of the machine wire harness (Figure 26).

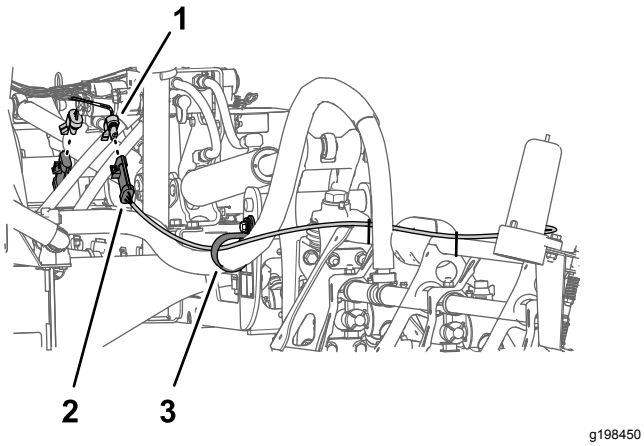


**Figure 26**

1. 3-socket connector (machine wire harness)
2. 3-pin connector (wire harness—ultra sonic boom leveling kit)
3. Support clamp

2. Repeat step 1 for the 3-pin connector of the ultra sonic boom wire harness at the other side of the machine.

# 6

# Removing the Center-Section Cover (11-nozzle) of the Optional Covered-Boom Kit

**No Parts Required**

## Procedure

1. While supporting the center-section cover (11–nozzle), remove the 4 flange-head bolts (5/16 x 1-1/4 inches) and 2 cover straps that secure the cover to the cover-support bracket (Figure 27).

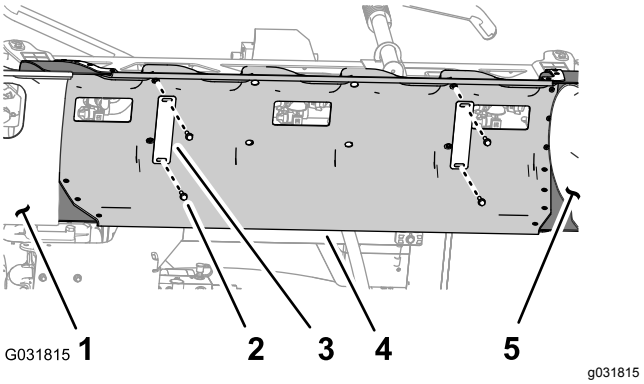


**Figure 27**

1. Boom-section cover (left)
2. Flange-head bolt (5/16 x 1-1/4 inches)
3. Cover strap
4. Center-section cover
5. Boom-section cover (right)

2. Remove the center-section cover from the machine (Figure 28).

   **Note:** Retain the cover for assembly, cover straps, and flange-head bolts for installation in steps 1 and 2 of Installing the Center-Section Cover (page 72).

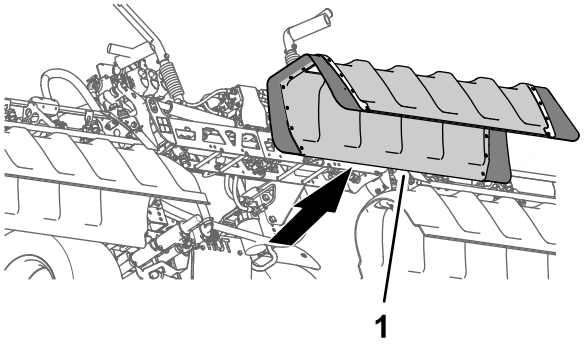


g197940

**Figure 28**

1. Center-section cover

# 7

# Disconnecting the Pressure-Sense Tube for the Dash Gauge

**No Parts Required**

## Disconnecting the Pressure-Sense Tube for the Dash Gauge

### Machines without the Optional Hand Wand Kit or the Optional Electric Hose Reel Kit

**Note:** If your machine is equipped with an optional spray gun kit, refer to Disconnecting Pressure-Sense Tube and Supply Hose (page 19).

1. Press in the collar for the tube coupler in the end cap of the right boom-section valve (Figure 29).

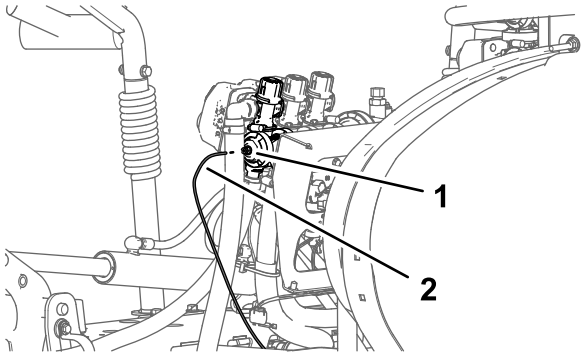


g197991

**Figure 29**

1. Tube coupler (end cap of the right boom-section valve)
2. Pressure-sense tube

2. Pull the pressure-sense tube for the dash gauge out of the tube coupler (Figure 29).

## Disconnecting Pressure-Sense Tube and Supply Hose

### Machines with the Optional Hand Wand Kit or the Optional Electric Hose Reel Kit

1. Press in the collar for the tube coupler in the 90° elbow of the right spray-section valve (Figure 30).

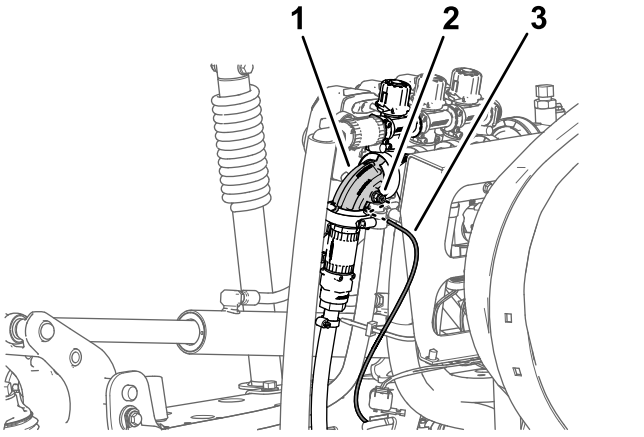


g198002

**Figure 30**

1. 90° elbow (right boom-section valve)
2. Tube coupler
3. Pressure-sense tube (dash-pressure gauge)

2. Pull the pressure-sense tube for the dash gauge out of the tube coupler (Figure 30).

   **Note:** Do not remove the 90° elbow for the shutoff valve for the supply hose of the hose reel from the flange of the right boom-section valve.

# 8

# Disconnecting the Sprayer Valve Connectors

**No Parts Required**

## Procedure

1. Disconnect the 3-socket connector labeled LEFT SPRAY VALVE, CENTER SPRAY VALVE, and RIGHT SPRAY VALVE of the machine wire harness from the 3-pin connectors of the 3 spray-valve actuators (Figure 31).

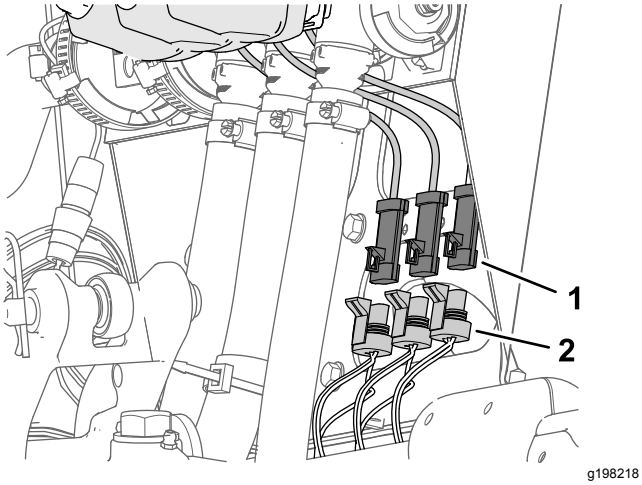


**Figure 31**

1. 3-pin connector (spray-valve actuator)
2. 3-socket connector—machine wire-harness (LEFT SPRAY VALVE, CENTER SPRAY VALVE, and RIGHT SPRAY VALVE)

2. Disconnect the 4-socket connector of the machine wire harness labeled RATE VALVE from the 4-pin connector of the rate-valve actuator (Figure 32).

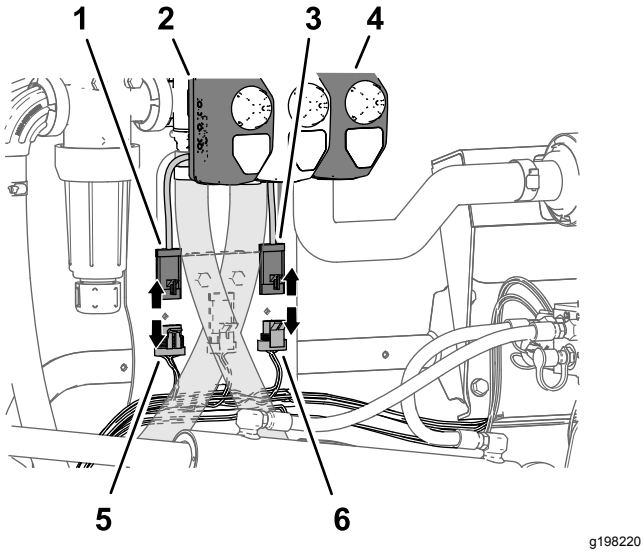


**Figure 32**

1. 4-pin connector (rate-valve actuator)
2. Actuator (rate valve)
3. 3-pin connector (master spray-valve actuator)
4. Actuator (master-spray valve)
5. 4-socket connector—machine wire harness (RATE VALVE)
6. 3-socket connector—machine wire harness (MASTER SPRAY VALVE)

3. Disconnect the 3-socket connector of the machine wire harness labeled MASTER SPRAY VALVE from the 3-pin connector of the master spray-valve actuator (Figure 32).

# 9

# Removing the Rate-Control Switch

**Parts needed for this procedure:**

| | |
|---|---|
| 1 | Cable tie |
| 1 | Switch plug |

## Procedure

1. Remove the 4 flange head screws (1/4 x 1/2 inch) that secure the 3-switch panel to the control console (Figure 33).

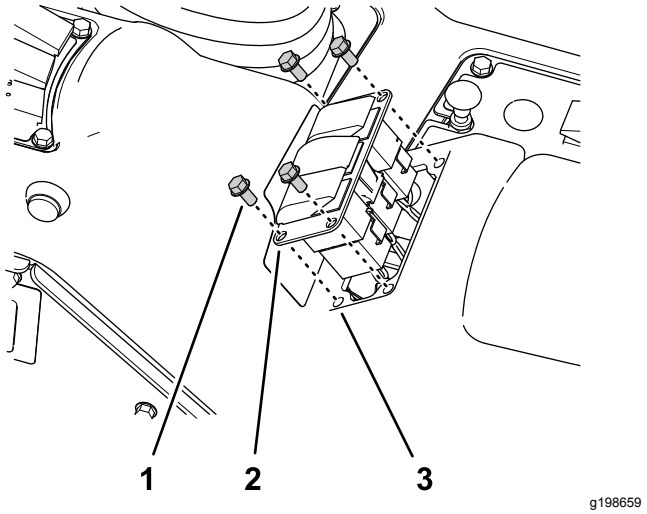


**Figure 33**

1. Flange head screw (1/4 x 1/2 inch)
2. 3-switch panel
3. Opening (control console)

2. Squeeze the lock tabs of the rate-control switch together and push up the switch out of the 3-switch panel (Figure 34).

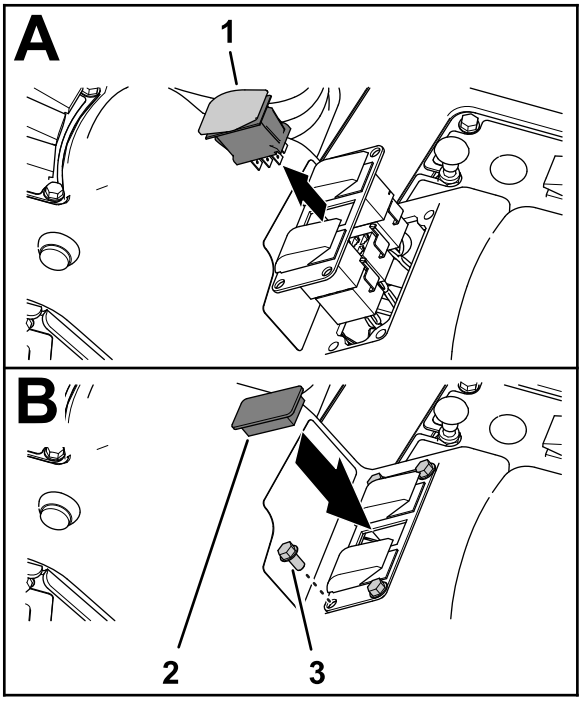


g198658

**Figure 34**

1. Rate-control switch
2. Switch plug
3. Flange head screw (1/4 x 1/2 inch)

3. Disconnect the 8-socket connector of the machine wire harness (labeled **Rate Switch**) from the 8-pin connector of the switch (Figure 33).

   **Note:** You no longer need the rate switch that you removed from the machine.

4. Route the branch of the front harness for the rate switch through the opening in the 3-switch panel and secure the wiring branch against an adjacent wire branch with a cable tie.
5. Assemble the 3-switch panel to the control console (Figure 34) with the 4 flange head screws (1/4 x 1/2 inch) that you removed in step 1.
6. Align the switch plug to the opening in the 3-switch panel where you removed the rate switch (Figure 33).
7. Insert the switch plug into the 3-switch panel until the plug snaps into the panel securely (Figure 33).

# 10

# Removing the Spray Sections

**No Parts Required**

## Removing the Spray-Section Hoses

1. At the outer spray section, remove the hose clamp that secures the sprayer-section hose to the barbed T-fitting (Figure 35).

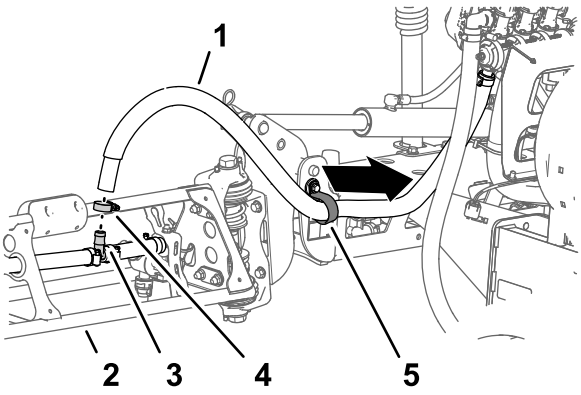


g198451

**Figure 35**

1. Sprayer-section hose (outer-spray section)
2. Outer-spray section
3. Barbed T-fitting
4. Hose clamp
5. R-clamp

2. Remove the hose from the T-fitting (Figure 35).
3. Remove the free end of the hose from the R-clamp (Figure 35).
4. Repeat steps 1 through 3 for the supply hose at the other outer-spray section.
5. Under the center-spray section, remove the hose clamp that secures the supply hose for the center-spray section to the barbed T-fitting (Figure 36).

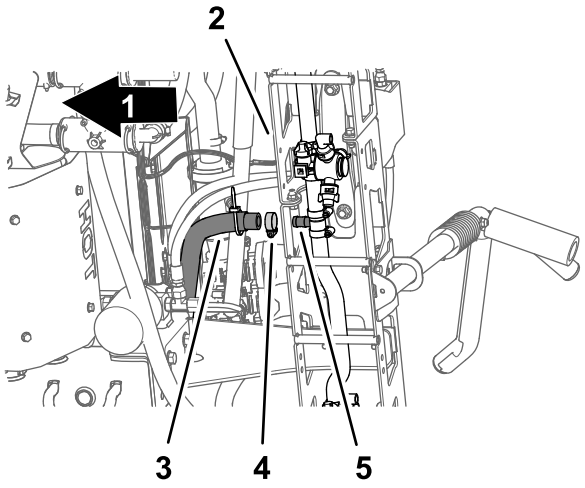


g198473

**Figure 36**

1. Front of the machine
2. Center-spray section
3. Supply hose (center-spray section)
4. Hose clamp
5. Barbed T-fitting

6. Remove the retainers that secure the quick couplers of the left, center, and right supply hoses from the quick couplers if the spray-section valves (Figure 37).

   **Note:** Retain the retainers for installation in Assembling the Hoses to Nozzle Valves 7 through 10 (page 61).

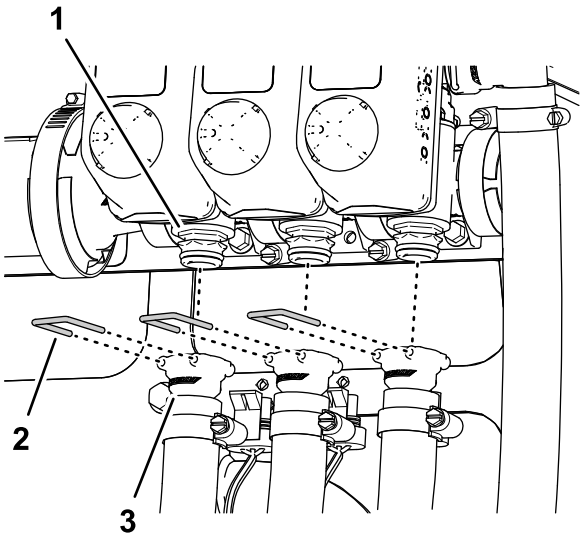


g198474

**Figure 37**

1. Quick coupler (spray-section valve)
2. Retainer
3. Quick coupler (socket—supply hose)

7. Remove the left, center, and right section-supply hoses from the quick couplers of the spray-section valves, and remove the hoses from the machine (Figure 37).

   **Note:** You no longer need the hoses for the left, center, and right section-supply hoses.

## Removing the Extend and Retract Hoses for the Lift Cylinder

1. Remove the hoses from the extend ports of the left and right lift cylinders (Figure 39).

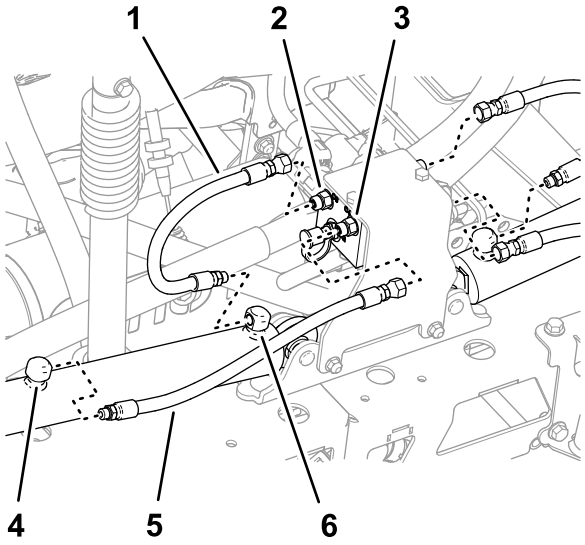


g198542

**Figure 38**

1. Hose (extend position)
2. Port C3 (lift-cylinder manifold)
3. Port C4 (lift-cylinder manifold)
4. Retract port (lift cylinder)
5. Hose (retract position)
6. Extend port (lift cylinder)

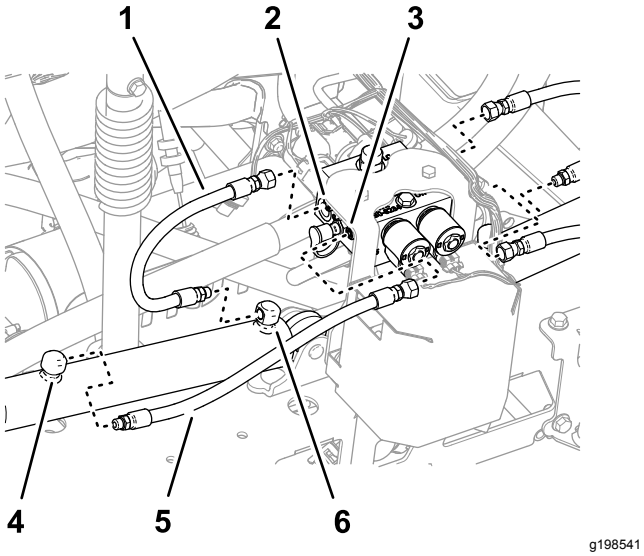


**Figure 39**

Machine with the Optional Ultra Sonic Boom Leveling Kit

1. Hose (extend position)
2. Port C3 (lift-cylinder manifold)
3. Port C4 (lift-cylinder manifold)
4. Retract port (lift cylinder)
5. Hose (retract position)
6. Extend port (lift cylinder)

2. Remove the hoses from the ports of the C2 and C4 of the lift-cylinder manifold (Figure 39).
3. Remove the hoses from the retract ports of the left and right lift cylinders (Figure 39).
4. Remove the hoses from the ports of the C1 and C3 of the lift-cylinder manifold (Figure 39).

   **Note:** You no longer need the hoses.

## Removing the Lift Cylinders

**Lift equipment capacity:** 91 kg (200 lb)

**Note:** Except where noted, retain all hardware that you remove; you will use the hardware to install the center-boom extension.

1. Use lifting equipment of the specified capacity to support the outer-spray section.
2. Remove the hairpin and clevis pin that secure the rod end of the lift cylinder to the pivot bracket (Figure 40).

   **Note:** Retain the clevis pin and hairpin for installation in Assembling the Lift Cylinders (page 54).

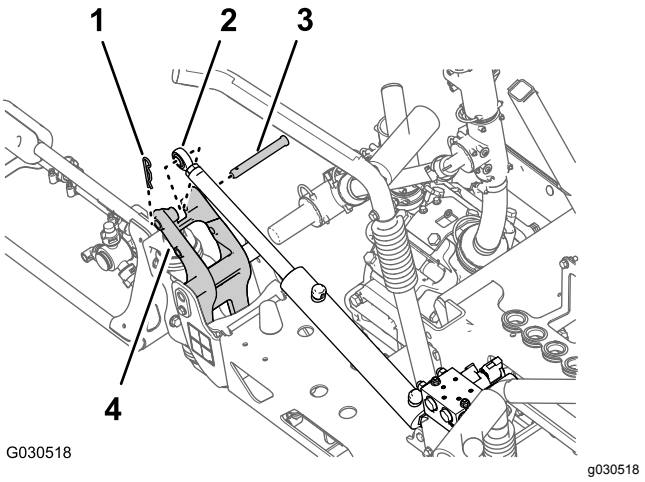


**Figure 40**

1. Hairpin
2. Rod fitting (lift cylinder)
3. Clevis pin
4. Pivot bracket

3. Remove the flange locknut (5/16 inch) and flange-head bolt (5/16 x 3/4 inch) that secures the pivot pin to the cylinder mount (Figure 41).

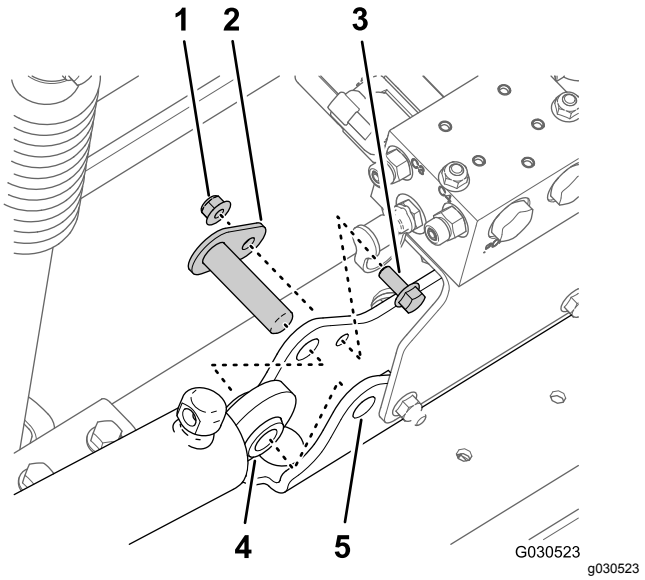


**Figure 41**

1. Flange locknut (5/16 inch)
2. Pivot pin
3. Flange-head bolt (5/16 x 3/4 inch)
4. Lift cylinder
5. Cylinder mount

4. Remove the pivot pin and the lift cylinder from the machine (Figure 41).
5. Perform the steps in Removing the Outer-Spray Sections (page 24).

# Removing the Outer-Spray Sections

**Lift equipment capacity:** 91 kg (200 lb)

**Note:** If your machine is equipped with the optional covered-boom kit, leave the covers installed at the outer-spray sections.

**⚠ WARNING**

**Lifting heavy machines and attachments improperly could result in serious injury or even death.**

**When lifting heavy machines and attachments, use lifting equipment, such as chains and straps, that is rated for the weight of the equipment.**

**Note:** Except where noted, retain all hardware that you remove; you will use the hardware to install the center-boom extension.

1. Remove the flange bolt (5/16 x 1 inch) and flange locknut (5/16 inch) securing the pivot pin to the pivot bracket (Figure 42).

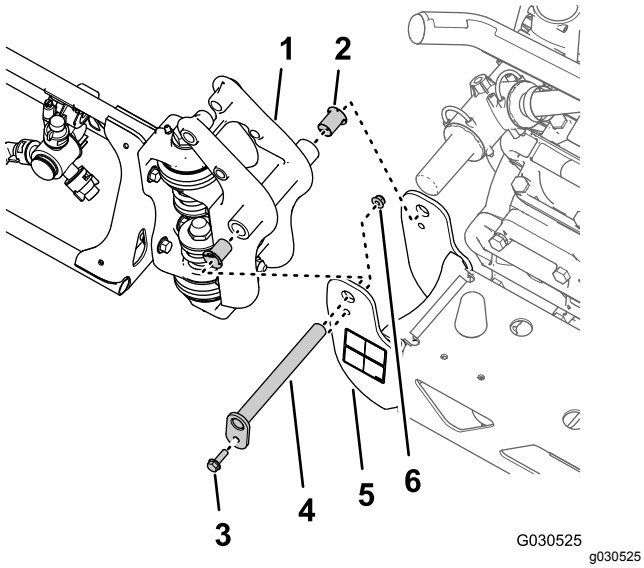


**Figure 42**

1. Pivot fitting (outer-spray section)
2. Nylon-flange bushing
3. Flange bolt (5/16 x 1 inch)
4. Pivot pin
5. Pivot bracket (center-spray section)
6. Flange locknut (5/16 inch)

2. Remove the pivot pin from the pivot bracket for the center-spray section and the pivot fitting for the outer-spray section (Figure 42).

   **Note:** Retain the flange bolt, flange nut and pivot pin for installation in Removing the Outer-Spray Sections (page 24).

3. Separate the outer-spray section from the center-spray section and remove outer section from the machine (Figure 42).
4. Remove the 2 nylon-flange bushings from the pivot fitting of the outer-spray section (Figure 42).

   **Note:** Discard the bushings.
5. Repeat steps 1 through 3 in Removing the Lift Cylinders (page 23) for the outer-spray section at the other side of the machine.
6. Repeat steps 1 through 4 of this section for the outer-spray section at the other side of the machine.

# Removing the Section-Lift Manifold from the Center-Spray Section

1. Remove the section-lift manifold from the cylinder mount as follows:
   - **For machines without the optional ultra sonic boom leveling kit:** remove the 2 flange locknuts (5/16 inch) and 2 flange-head bolts (5/16 x 1 inch) that secure the support bracket for the section-lift manifold to the cylinder mount, and separate the manifold and bracket from the cylinder mount (Figure 43).

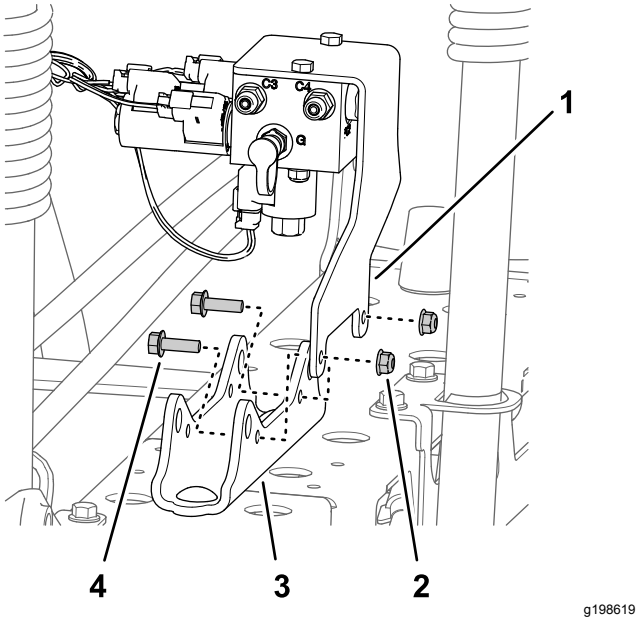


**Figure 43**

1. Support bracket (section-lift manifold)
2. Flange locknut (5/16 inch)
3. Cylinder mount
4. Flange-head bolt (5/16 x 1 inch)

   - **For machines with the optional ultra sonic boom leveling kit:** Remove the 2

flange locknuts (5/16 inch) and 2 flange-head bolts (5/16 x 1 inch) that secure the support bracket for the section-lift manifold and the TEC controller bracket to the cylinder mount, and separate the manifold and bracket from the cylinder mount (Figure 44).

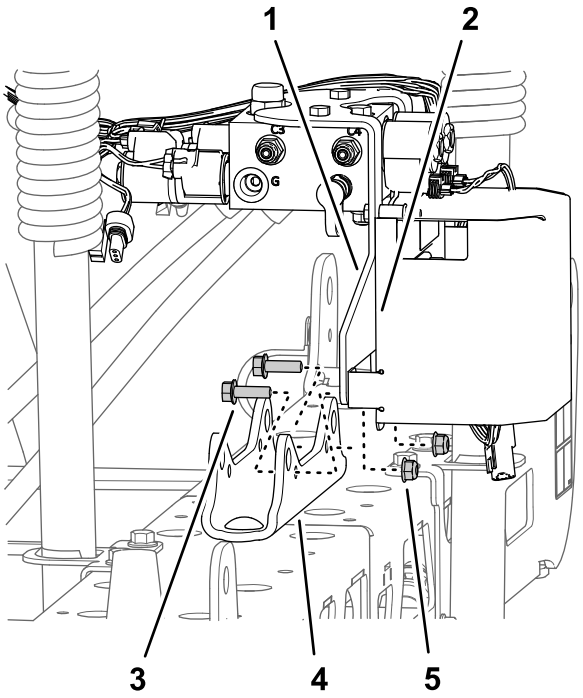


g198618

**Figure 44**

Machine with the Optional Ultra Sonic Boom Leveling Kit

1. Support bracket (section-lift manifold)
2. TEC controller bracket
3. Flange-head bolt (5/16 x 1 inch)
4. Cylinder mount
5. Flange locknut (5/16 inch)

2. Support the section-lift manifold by tying it to the sprayer valve mount bracket with a piece of rope.

   **Note:** Retain the support bracket and lift manifold, bolts, and nuts for installation in 19 Assembling the Lift Cylinder Manifold to the Cylinder Mount (page 46).

# Removing the Center-Spray Section

**Lifting-equipment capacity:** 41 kg (90 lb)

1. If your machine is equipped with the optional covered-boom kit, remove the cover from the center-spray sections.
2. Support the center-spray section with lifting equipment with the specified capacity (Figure 45).

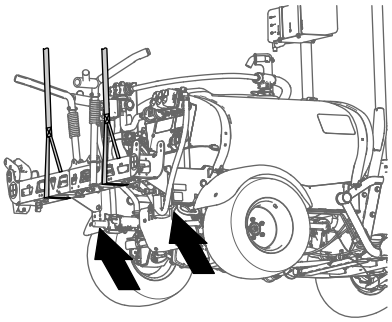

g198634

**Figure 45**

3. Use a piece of tape to mark the holes where the 4 flange-head bolts (1/2 x 1-1/4 inches) and 4 flange locknuts (1/2 inch) secure the support brackets for the center-spray section to the mounting plate of the machine (Figure 46).

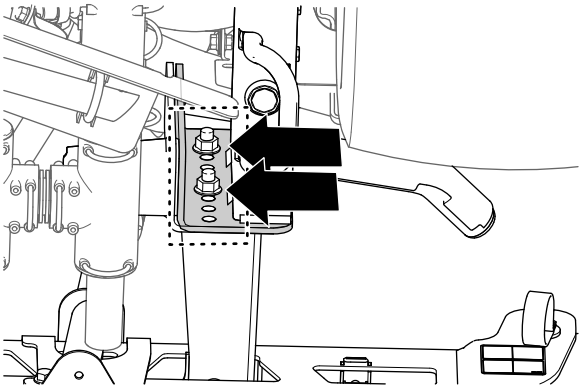

g198633

**Figure 46**

4. Remove the 4 flange-head bolts (1/2 x 1-1/4 inches) and 4 flange locknuts (1/2 inch) that secure the support brackets of the center-spray section to the mounting plate on the frame for the machine, and remove the center-spray section from the machine (Figure 47).

   **Note:** Retain the bolts and locknuts for installation of the new center-spray section.

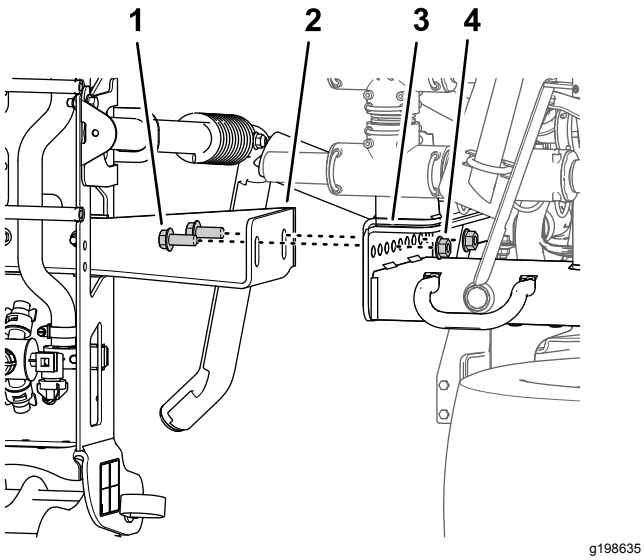


**Figure 47**

1. Flange-head bolt (1/2 x 1-1/4 inches)
2. Support brackets (center-spray section)
3. Mounting channels (sprayer frame)
4. Flange locknut (1/2 inch)

# 11

# Installing the Center-Boom Extension

**Parts needed for this procedure:**

| | |
|---|---|
| 2 | Flange-head bolt (3/8 x 1 inch) |
| 2 | Flange locknuts (3/8 inch) |
| 1 | Center-boom extension |
| 1 | Cylinder mount (wide) |
| 1 | Tie plate (wide) |
| 4 | Carriage bolt (1/2 x 1-1/4 inches) |
| 4 | Flange locknut (1/2 inch) |

## Removing the Sprayer Nozzles

1. At the center-spray section, remove the flanged locknut that secures the sprayer nozzle to the nozzle mount (Figure 48 and Figure 49).

   **Note:** Retain the locknut for installation in step 6 of Installing the Sprayer Nozzles and Hoses to the Center-Spray Section (page 31).

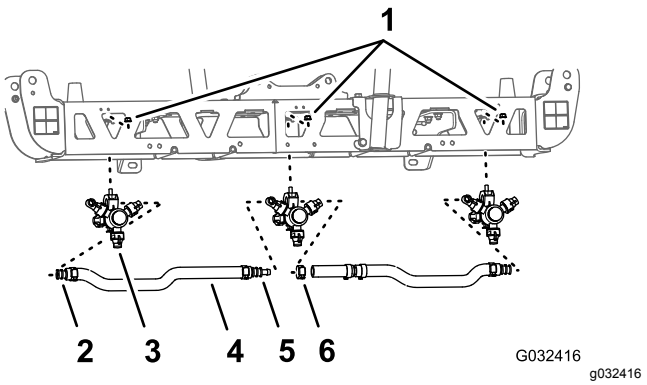


**Figure 48**

1. Flange locknut (5/16 inch)
2. Single barbed-hose shank (3/4 inch)
3. Sprayer nozzle
4. Hose (3/4 inch inside diameter)
5. Double barbed-hose shank (3/4 inch)
6. Hose clamp

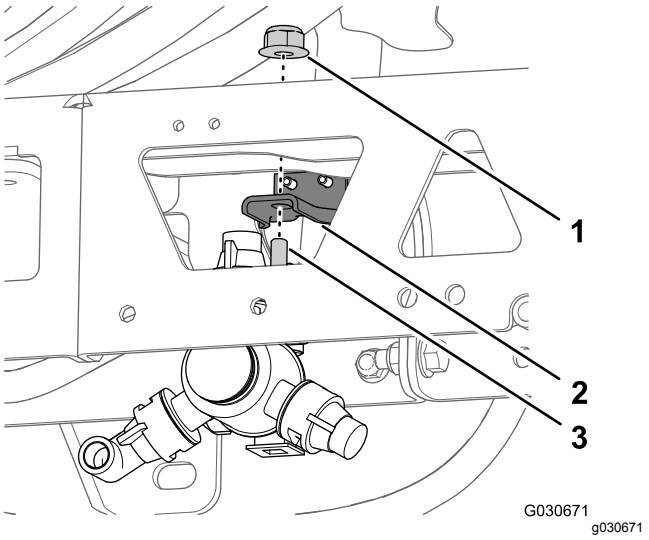


**Figure 49**

1. Flange locknut (5/16 inch)
2. Nozzle mount
3. Hex-head bolt (5/16 x 3/4 inch—sprayer nozzle)

2. Remove the stainless steel screw (#12 x 1-1/4 inches) that secures the upper clamp half and double or single barbed-hose shank (3/4 inch) to the body of the sprayer nozzle, and separate the barbed-hose shank and hose from the nozzle (Figure 50).

   **Note:** The hex-head bolt (5/16 x 3/4 inch—stainless steel) will separate from the upper clamp half when you open the clamp, retain the bolt for installation.

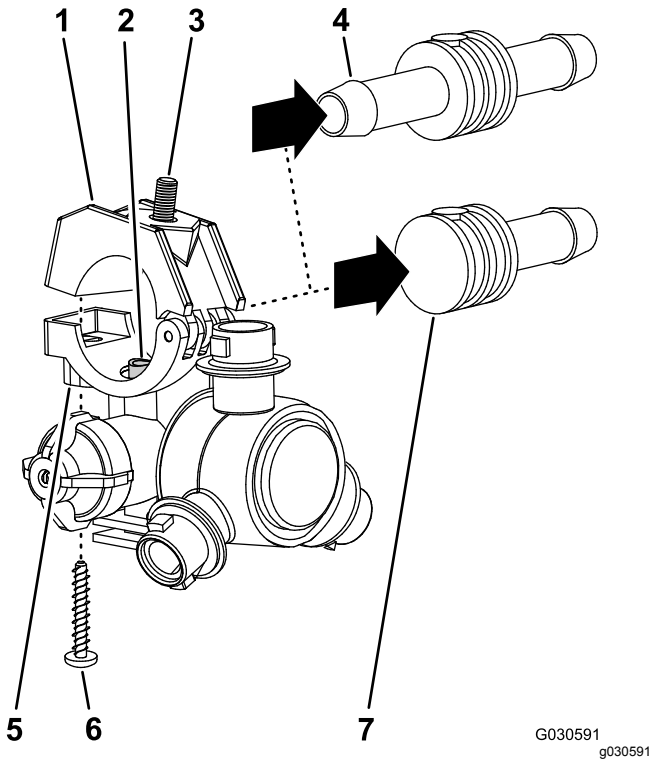


**Figure 50**

1. Upper clamp half
2. Transfer tube
3. Hex-head bolt (5/16 x 3/4 inch—stainless steel)
4. Double barbed-hose shank (3/4 inch)
5. Saddle (sprayer-nozzle body)
6. Stainless steel screw (#12 x 1-1/4 inches)
7. Single barbed-hose shank (3/4 inch)

3. Remove the nozzle from the center-spray section (Figure 48 and Figure 49).
4. Repeat steps 1 and 2 for the other 2 sprayer nozzles.

   **Note:** Retain the sprayer nozzles, stainless steel screws, and hex-head bolts for installation in step 6 and 7 of Assembling the Sprayer Nozzles and Hoses for the Center-Spray Section (page 30).
5. Remove the hoses (3/4 inch inside diameter), barbed-hose shanks, clamps and barbed T-fitting from the center-spray section (Figure 48).

   **Note:** You no longer need the hose, hose shanks, clamps, and T-fitting.

## Removing the Support Brackets from the Center-Spray Section

**Lifting-equipment capacity:** 41 kg (90 lb)

1. Support the center-spray section with lifting equipment with the specified capacity.
2. Remove the 2 flange-head bolts (3/8 x 1 inch) and 2 flange locknuts (3/8 inch) that secure the support bracket to the center-spray section, and remove the bracket (Figure 51).

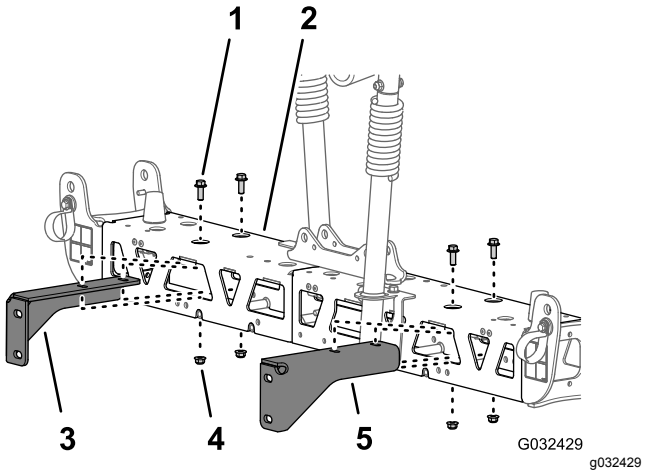


**Figure 51**

1. Flange-head bolt (3/8 x 1 inch)
2. Center-spray section
3. Right support bracket (center-spray section)
4. Flange locknut (3/8 inch)
5. Left support bracket (center-spray section)

3. Remove the 2 flange-head bolts (3/8 x 1 inch) and 2 flange locknuts (3/8 inch) that secure the other support bracket to the center-spray section, and remove the bracket (Figure 51).

   **Note:** Retain the support brackets, bolts, and locknuts for installation in steps 3 and 4 of Assembling the Support Brackets to the Center-Spray Section (page 29).

## Separating the Center-Spray Section Trusses

1. Remove the 2 flange head bolts (3/8 x 1 inch) and 2 locknuts (3/8 inch) that secure the vertical flanges of the left and right truss frames (Figure 52).

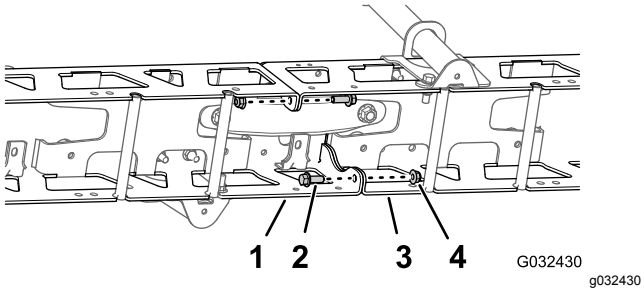


**Figure 52**

1. Left truss frame
2. Flange-head bolt (3/8 x 1 inch)
3. Right truss frame
4. Locknuts (3/8 inch)

2. Remove the 2 carriage bolts (1/2 x 1-1/4 inches) and 2 locknuts (1/2 inch) that secure the narrow cylinder mount, left and right truss frames, and narrow tie plate (Figure 53).

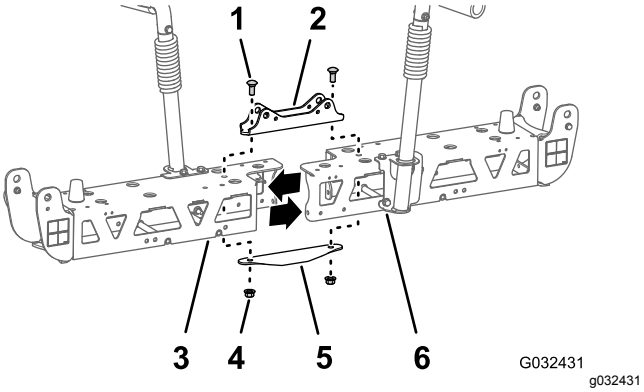


**Figure 53**

1. Carriage bolt (1/2 x 1-1/4 inches)
2. Cylinder mount (narrow)
3. Left truss frame
4. Locknuts (1/2 inch)
5. Tie plate (narrow)
6. Right truss frame

**Note:** Retain the flange-head bolts, carriage bolts, and locknuts for installation in steps 2 and 7 of Installing the Center-Boom Extension (page 28). You no longer need the narrow cylinder mount and narrow tie plate.

3. Separate the left and right truss frames.

# Installing the Center-Boom Extension

1. Align the holes in vertical flanges of the center-boom extension with the holes in the truss frame (Figure 54).

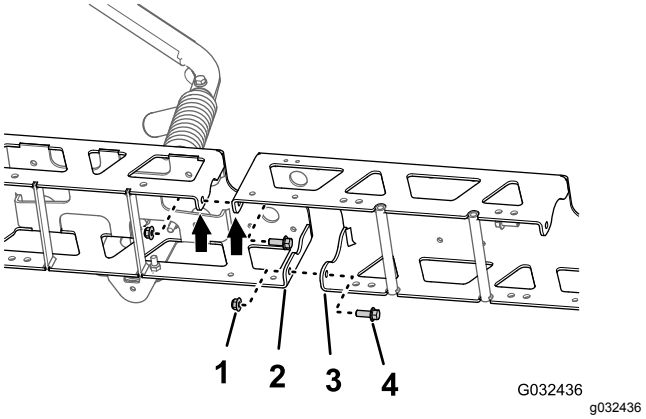


**Figure 54**

1. Flange locknuts (3/8 inch)
2. Vertical flange (truss frame)
3. Vertical flange (center-boom extension)
4. Flange-head bolts (3/8 x 1 inch)

2. Loosely assemble the center-boom extension to the truss frame (Figure 54) with the 2 flange-head bolts (3/8 x 1 inch) and 2 flange locknuts (3/8 inch) that you removed in step 1 of Separating the Center-Spray Section Trusses (page 27).
3. Align the holes in vertical flanges of the center-boom extension with the holes in the other truss frame (Figure 54).
4. Loosely assemble the center-boom extension to the other truss frame (Figure 54) with the 2 flange-head bolts (3/8 x 1 inch) and 2 flange locknuts (3/8 inch) from the GeoLink spray system finishing kit (Figure 54).
5. Align the holes in the cylinder mount with the holes at the centerline of the truss frame and center-boom extension (Figure 55).

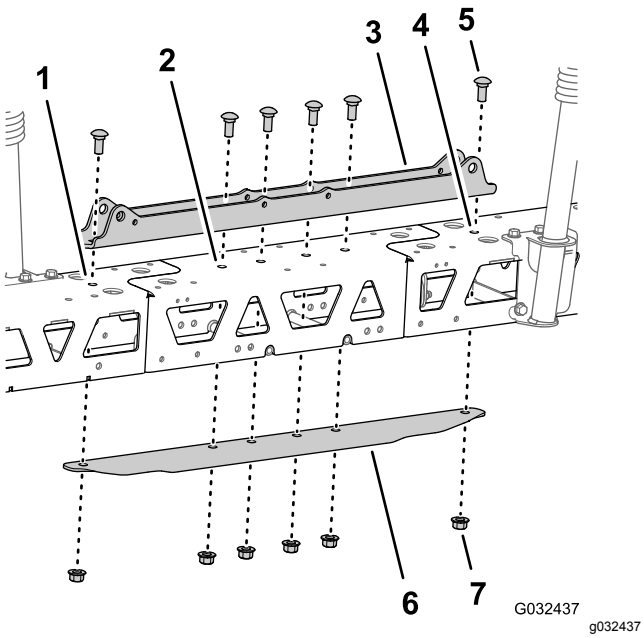


**Figure 55**

1. Left truss frame
2. Center-boom extension
3. Cylinder mount (wide)
4. Right truss frame
5. Carriage bolt (1/2 x 1-1/4 inches)
6. Tie plate (wide)
7. Flange locknut (1/2 inch)

6. Insert the tie plate into the truss frame and center-boom extension and align the hole in the tie plate with the holes at the centerline of the trusses and boom extension (Figure 55).
7. Assemble the cylinder mount, trusses, center-boom extension, and tie plate with the 2 carriage bolt (1/2 x 1-1/4 inches) and 2 flange locknut (1/2 inch) that you removed in step 2 of Separating the Center-Spray Section Trusses (page 27), and the 4 carriage bolt (1/2 x 1-1/4 inches) and 4 flange locknut (1/2 inch) from the GeoLink spray system finishing kit (Figure 55).
8. Torque the 3/8 inch flange head bolts and flange locknuts to 37 to 45 N·m (27 to 33 ft-lb).
9. Torque the 1/2 inch flange locknuts to 91 to 113 N·m (67 to 83 ft-lb).

# 12

# Installing the Mount Brackets and Sprayer Nozzles to the Center-Spray Section

**Parts needed for this procedure:**

| | |
|---|---|
| 2 | Sprayer nozzle |
| 2 | Hose assembly (sprayer valve 5 or 6) |
| 2 | Flange locknut (5/16 inch) |

## Assembling the Support Brackets to the Center-Spray Section

**Lifting-equipment capacity:** 55 kg (120 lb)

1. Support the center-spray section with lifting equipment with the specified capacity.
2. Align the holes in the right support bracket to the holes in the right truss frame as shown in Figure 56.

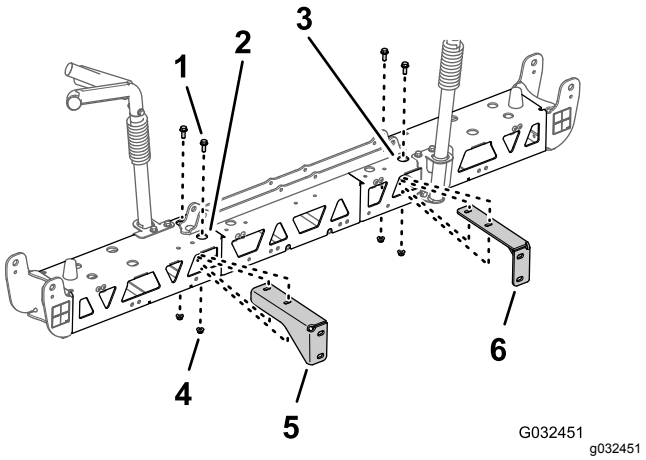


**Figure 56**

1. Flange-head bolt (3/8 x 1 inch)
2. Right truss frame (center-spray section)
3. Left truss frame (center-spray section)
4. Flange locknut (3/8 inch)
5. Right support bracket (center-spray section)
6. Left support bracket (center-spray section)

3. Assemble the right support bracket to the right truss frame (Figure 56) with the 2 flange-head bolts (3/8 x 1 inch) and 2 flange locknut (3/8 inch) that you removed in steps 2 and 3 of Removing the Support Brackets from the Center-Spray Section (page 27).

4. Repeat steps 2 and 3 for the left support bracket at the left truss frame (Figure 56).
5. Torque the flange head bolts and flange nuts to 37 to 45 N·m (27 to 33 ft-lb).

## Assembling the Sprayer Nozzles and Hoses for the Center-Spray Section

1. Using lifting equipment, raise the new center-spray section to a comfortable working height.
2. Working with the 2 sprayer nozzle from the GeoLink spray system finishing kit, remove the stainless steel screw that secures the upper clamp half to the saddle (Figure 57).

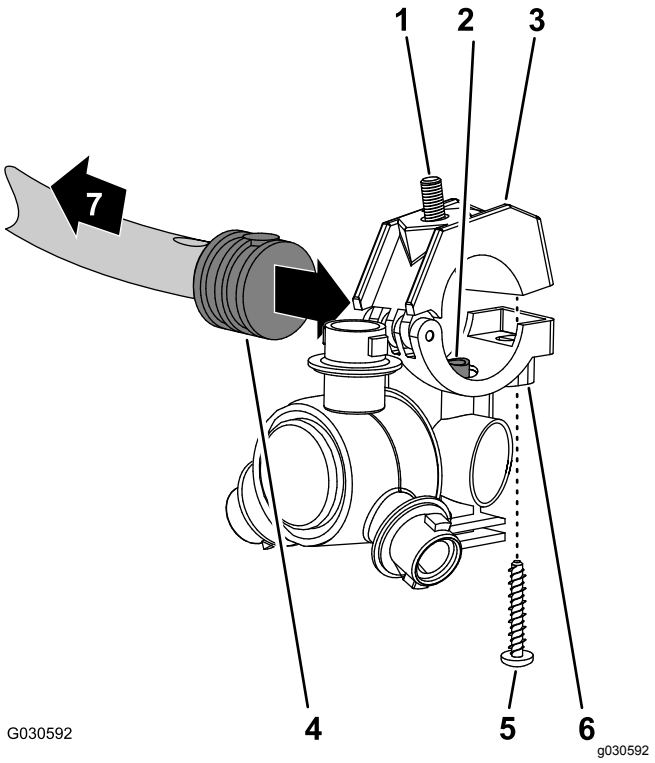


**Figure 57**

1. Hex-head bolt (5/16 x 3/4 inch—stainless steel)
2. Transfer tube
3. Upper clamp half
4. Single barbed-hose shank (1/2 inch)
5. Stainless steel screw (#12 x 1-1/4 inches)
6. Sprayer-nozzle body
7. Toward the spray section

3. Locate the hole in the side of single barbed-hose shank at the end of the hose 25 cm (10 inches) of the hose assembly (sprayer valve 5 or 6) for the center-spray section (Figure 57 and Figure 58).

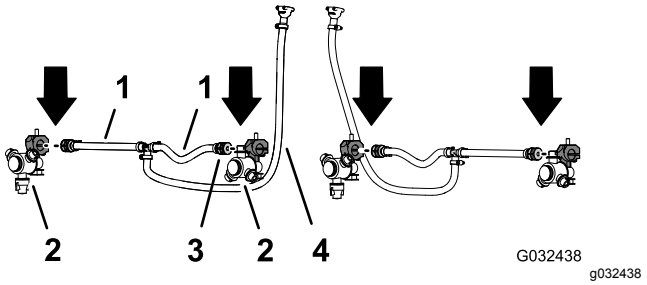


**Figure 58**

1. Hose 13 x 250 mm (1/2 x 10 inches—sprayer valve 5 or 6)
2. Sprayer nozzle
3. Single barbed-hose shank 13 mm (1/2 inch)
4. Hose and barbed coupler 13 x 810 mm (1/2 x 32 inches—sprayer valve 5 or 6)

4. Align the transfer tube in the saddle of a sprayer nozzle (Figure 57) with the hole in the side of the single barbed-hose shank (1/2 inch).
5. Close the upper clamp half around the barbed-hose shank and secure the clamp half and spray-nozzle body (Figure 57) with the stainless steel screw (#12 x 1-1/4 inches); torque the stainless steel screw to 14 to 18 N·m (20 to 25 in-lb).

   ***Important:*** **Do not tighten the stainless steel screw more than the torque specification in step 5.**

   **Note:** Ensure that the hex-head bolt (5/16 x 3/4 inch) is seated in the recess in the upper clamp half when closing the clamp.
6. Working with the sprayer nozzle, hex-head bolt, and stainless steel screw that you removed in steps 1 and 2 of Removing the Sprayer Nozzles (page 26), repeat steps 3 through 5 to the single barbed-hose shank (Figure 57 and Figure 58) at the end of the other hose 25 cm (10 inches).
7. Working with the 2 sprayer nozzles that you removed in step 4 of Removing the Sprayer Nozzles (page 26), repeat steps 3 through 5 to the single barbed-hose shanks of the other hose assembly (sprayer valve 5 or 6) for the center-spray section (Figure 57 and Figure 58).

## Installing the Sprayer Nozzles and Hoses to the Center-Spray Section

1. Route the hose 13 mm (10 inches) and nozzle assembly between the truss braces of the outer truss (Figure 59).

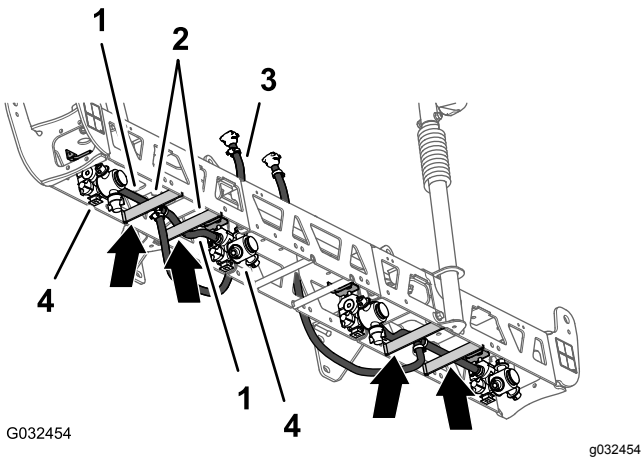


**Figure 59**

1. Hoses 13 x 250 mm (1/2 x 10 inches)
2. Truss braces (left truss)
3. Hose and barbed coupler 13 x 810 mm (1/2 x 32 inches)
4. Sprayer nozzles

2. Route the hose and nozzle above the truss brace and outward to the outboard nozzle mount (Figure 59).
3. Align the hex-head bolt (5/16 x 3/4 inch) of the sprayer nozzle through the hole in the nozzle mount and loosely secure the nozzle to the mount with a flange locknut (5/16 inch) from the GeoLink spray system finishing kit (Figure 60).

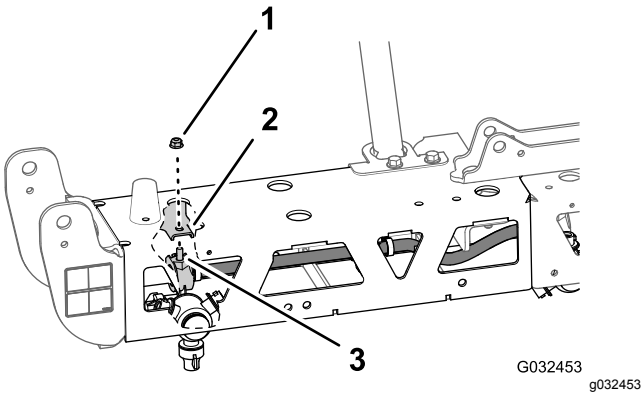


**Figure 60**

1. Flange locknut (5/16 inch)
2. Nozzle mount (outboard)
3. Hex-head bolt (5/16 x 3/4 inch—stainless steel)

4. Route the other hose 13 mm (10 inches)and nozzle assembly between the s truss braces of the outer truss (Figure 59).
5. Route the hose and nozzle above the truss brace and inward to the inboard nozzle mount (Figure 59).
6. Align the hex-head bolt (5/16 x 3/4 inch) of the sprayer nozzle through the hole in the nozzle mount (Figure 60) and loosely secure the nozzle to the mount with a flange locknut (5/16 inch) that you removed in steps 1 and 4 of Removing the Sprayer Nozzles (page 26).
7. Torque the flange locknut to 1978 to 2542 N·cm (175 to 225 in-lb).
8. Route the hose and barbed coupler 13 x 810 mm (1/2 x 32 inches) to the side of the center-spray section with the left and right support brackets (Figure 59).
9. Repeat steps 1 through 8 for the other hose and nozzle assembly at the other outer truss (Figure 59 and Figure 60).

# 13

# Removing the Boom-Section Valves

**Parts needed for this procedure:**

| | |
|---|---|
| 3 | Cap (quick coupler) |
| 3 | Retainer |

## Removing the Section Bypass Hose

1. Remove the upper end of the bypass hose as follows:
   - **For machines without the optional hand wand kit or optional electric hose reel kit,** remove the small retainer that secures the quick-disconnect fitting of the bypass hose to the quick-disconnect fitting of the right section-bypass valve (Figure 61).

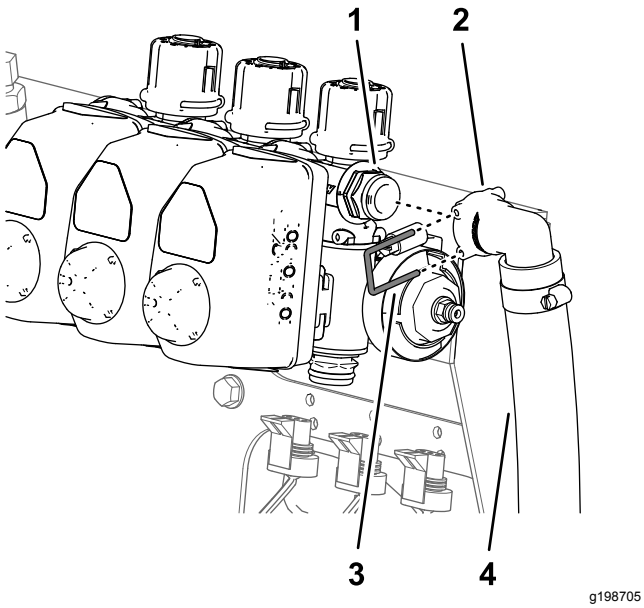


**Figure 61**

1. Quick-disconnect fitting (right section-bypass valve)
2. Quick-disconnect fitting (90° socket—bypass hose)
3. Retainer (small)
4. Bypass hose

- **For machines with the optional hand wand kit or optional electric hose reel kit, perform the following steps:**

  A. Remove the retainer that secures the quick connect fitting of the shutoff valve to the quick-disconnect socket of the right section-bypass valve, and separate the valve from the socket (Figure 62).

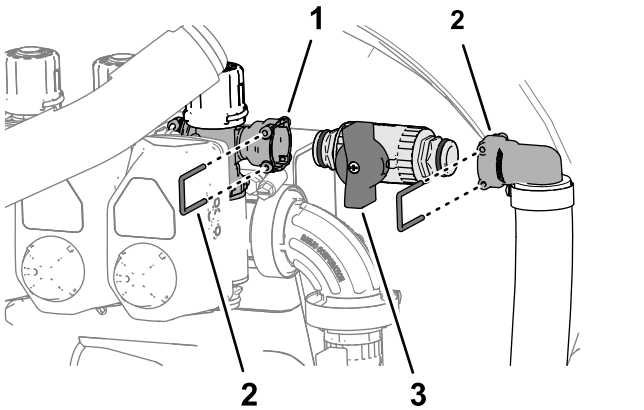


**Figure 62**

1. Quick connect socket (right section-bypass valve)
2. Quick-disconnect coupling (90° barbed fitting)
3. Retainer
4. Quick connect fitting (shutoff valve)

  B. Remove the retainer that secures the quick connect fitting of the shutoff valve to the quick-disconnect socket of the 90° barbed fitting, and separate the valve from the socket (Figure 62).

  **Note:** Retain the shutoff valve and retainers for installation in Assembling the Shutoff Valve to the Bypass Hose (page 44).

2. Remove the large retainer that secures the 90° barbed fitting at the lower end of the bypass hose to the bulkhead fitting of the sprayer tank (Figure 63).

   **Note:** Retain the large retainer for installation in Assembling the Bypass Hoses to the Tank (page 44).

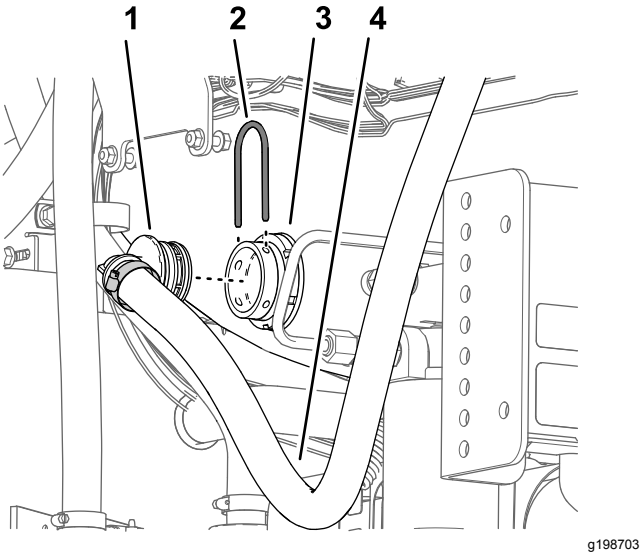


**Figure 63**

1. 90° barbed fitting
2. Retainer (large)
3. Bulkhead fitting
4. Bypass hose

3. Remove the bypass hose from the machine.

   **Note:** You no longer need the bypass hose and the small retainer.

## Positioning the Bypass Valves—Machines without the Optional Hand Spray Wand Kit or the Optional Electric Hose Reel Kit

1. Remove the 3 retainers that secure the 3 valve actuators to the left, center, and right section valves (Figure 64).

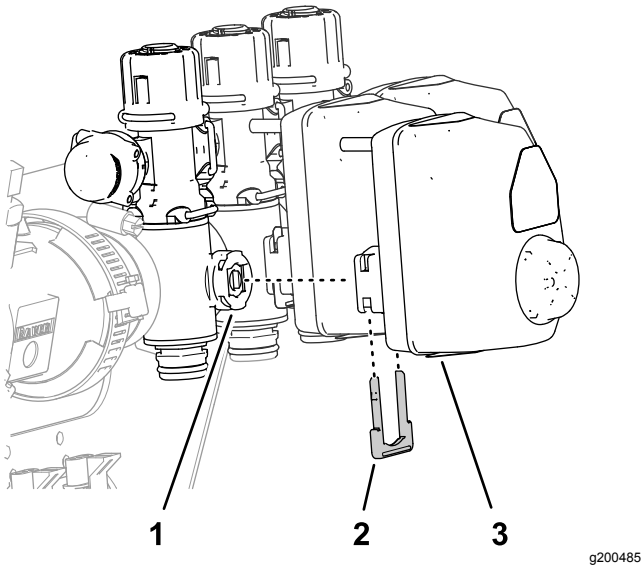


g200485

**Figure 64**

1. Section valve
2. Retainer
3. Valve actuator

2. Remove the valve actuators from the left, center, and right section valves (Figure 64).
3. Remove the retainer that secures the cap to the quick disconnect fitting of the bypass valve, and remove the cap (Figure 65).

   **Note:** You no longer need the cap.

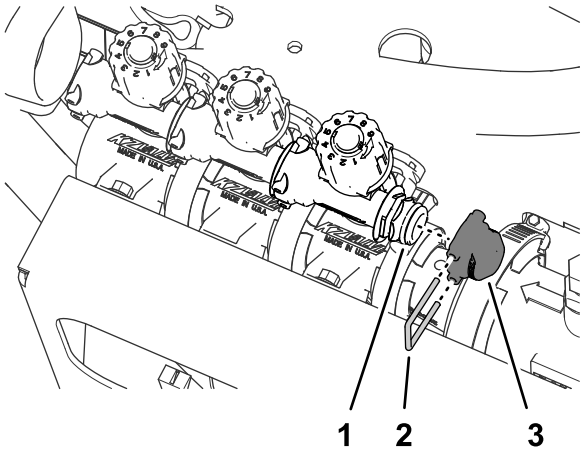


g200483

**Figure 65**

1. Quick disconnect fitting (bypass valve)
2. Retainer
3. Cap

4. Remove the 3 retainers that secure the 3 bypass valves to the left, center, and right section valves (Figure 66).

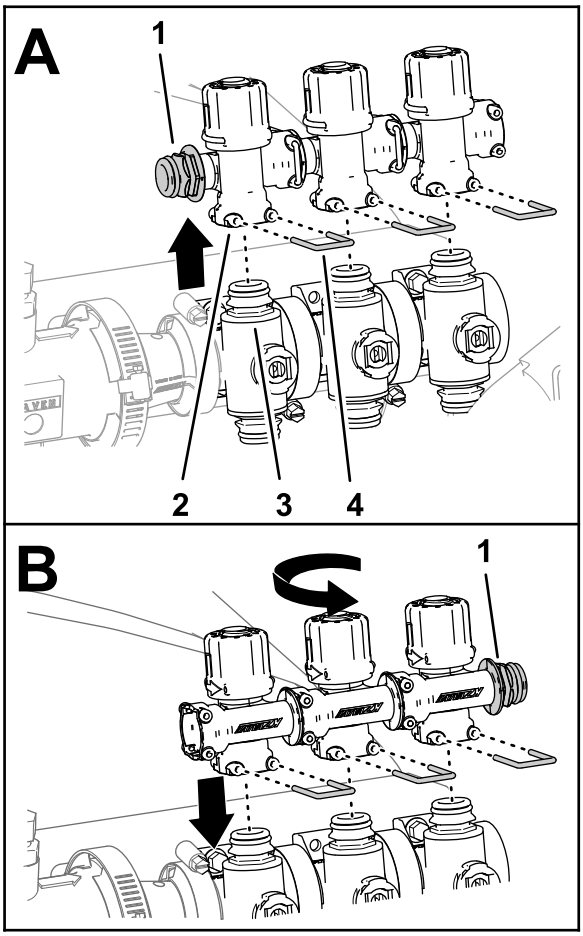


g200486

**Figure 66**

1. Quick disconnect fitting
2. Quick connect fitting—socket (bypass valve)
3. Quick connect fitting (section valve)
4. Retainer

5. Lift the bypass valves from the section valves (Figure 66).
6. Rotate the bypass valves 180° and assemble them onto the quick disconnect fittings of the section valves (Figure 66).
7. Secure the 3 bypass valves to the section valves with the 3 retainers that you removed in step 4 (Figure 66).
8. Assemble plug into the quick connect socket of the bypass valve (Figure 67).

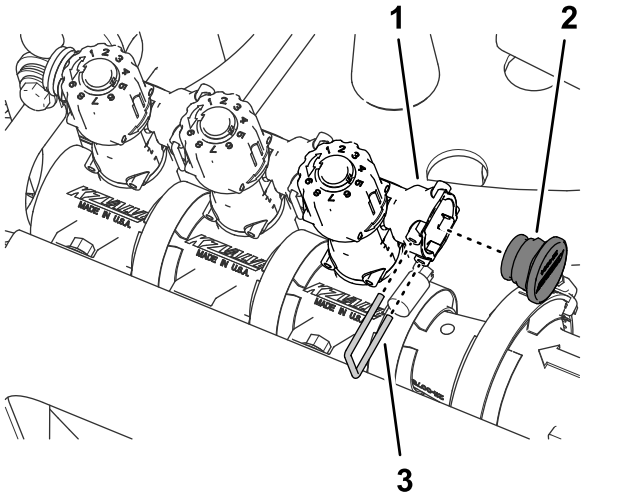


g200481

**Figure 67**

1. Quick connect socket (bypass valve)
2. Plug
3. Retainer

9. Secure the plug to the quick connect socket with the retainer that you removed in step 3 (Figure 67).
10. Assemble the 3 valve actuators onto the left, center, and right section valves (Figure 64) with the retainers that you removed in step 1.

## Removing the Section Valves from the Manifold Mount

**Note:** You will add the section valves to the valves for the 10-valve GeoLink sprayer system in Assembling the 3 Section Valves to the Valve Mount (page 50).

1. Remove the 2 flange-head bolts (1/4 x 3/4 inch) and 2 locknuts (1/4 inch) that secure the left boom-section valve to the manifold mount (Figure 68).

   **Note:** You no longer need the 2 flange head bolts and locknuts.

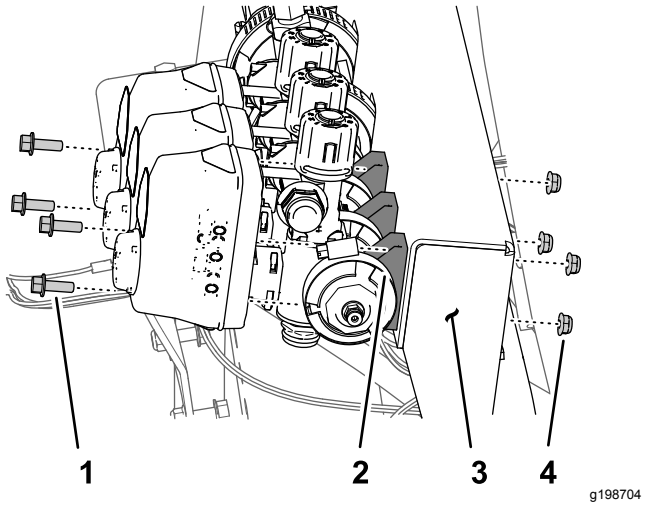


g198704

**Figure 68**

1. Flange-head bolt (1/4 x 3/4 inch)
2. Section valve
3. Manifold mount
4. Locknut (1/4 inch)

2. Remove the 2 flange-head bolts (1/4 x 3/4 inch) and 2 locknuts (1/4 inch) that secure the right boom-section valve to the manifold mount (Figure 68).
3. Remove the flange clamp 40 to 64 mm (1-9/16 to 2-1/2 inches) and gasket 25 x 35 mm (1 x 1-3/8 inches) that secures the flange of the left section valve to the adapter (Figure 68).

   **Note:** Retain the 2 flange-head bolts, 2 locknuts, flange clamp and gasket for installation in Assembling the 3 Section Valves to the Valve Mount (page 50).

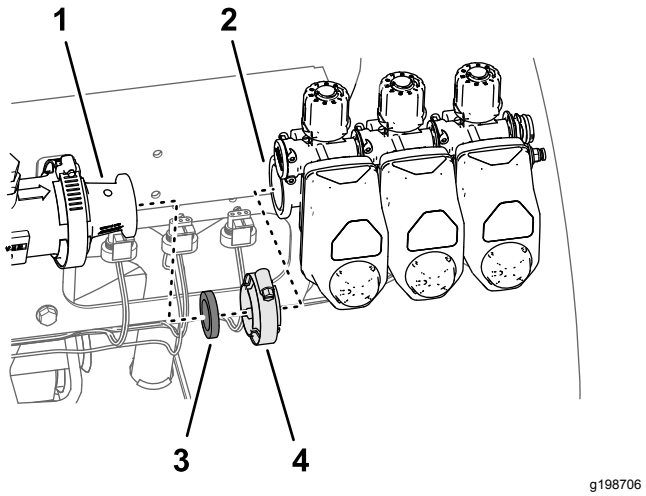


g198706

**Figure 69**

1. Adapter
2. Flange (left section valve)
3. Gasket 25 x 35 mm (1 x 1-3/8 inches)
4. Flange clamp 40 to 64 mm (1-9/16 to 2-1/2 inches)

4. Remove the 3 section valves from the machine (Figure 69).

5. Remove the decals from the actuators of the 3 section valves (Figure 70).

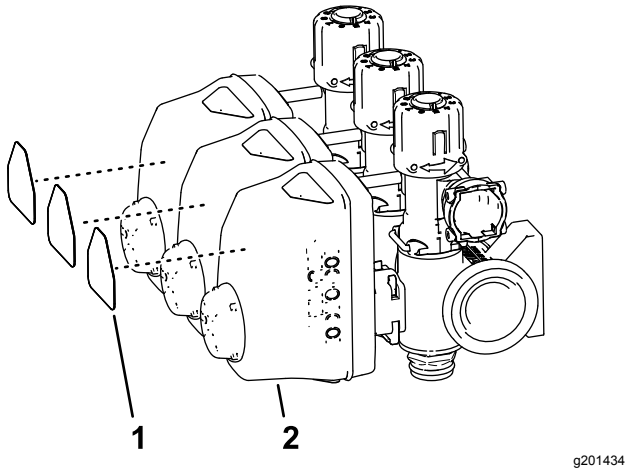


**Figure 70**

1. Section-valve decal
2. Actuator (section valve)

6. Remove the flange clamp 51 mm (2 inches) and gasket 38 mm (1-1/2 inches) that secure the flange of the adapter to the flange of the flow meter (Figure 71).

   **Note:** Retain the flange clamp and gasket for installation in Assembling the Manifold to the Flow Meter (page 43).

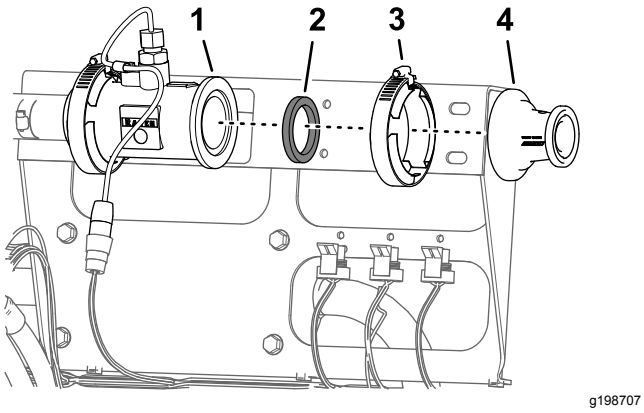


**Figure 71**

1. Flange (flow meter)
2. Gasket
3. Flange clamp 51 mm (2 inches)
4. Adapter

# 14

# Installing the Flow Meter Support Clamps

**Parts needed for this procedure:**

| | |
|---|---|
| 1 | Flow meter mount |
| 4 | Support-clamp half |
| 4 | Bolt (1/4 x 4-1/2 inches) |
| 4 | Flange locknuts (1/4 inch) |

## Removing the Section-Valve Bracket

1. Disconnect the 3-socket connector of the machine wire harness labeled FLOW METER from the 3-pin connector of the flow meter (Figure 72).

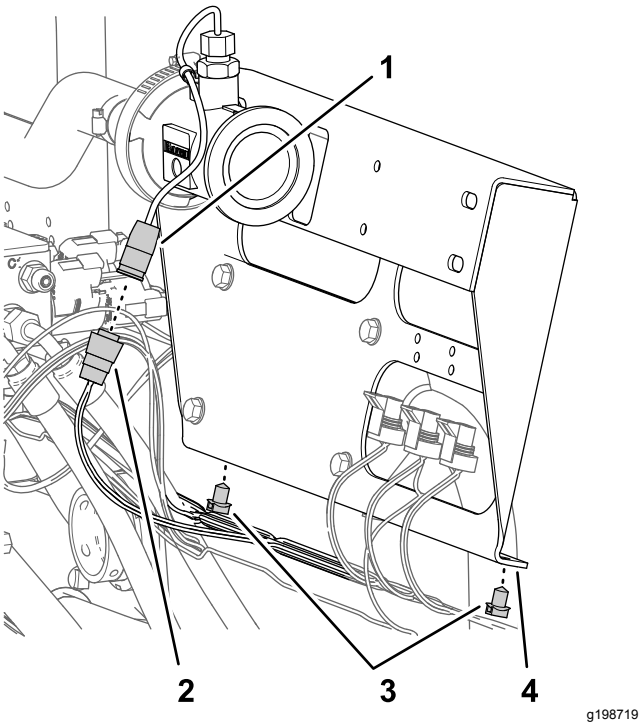


**Figure 72**

1. 3-pin connector (flow meter)
2. 3-socket connector (machine wire harness—FLOW METER)
3. Push-in fasteners
4. Section-valve bracket

2. Remove the 2 push-in fasteners of the machine wire harness from the bottom flange of the section-valve bracket (Figure 72).

3. Remove the 4 flange-head screws (5/16 x 3/4 inch) that secure the section-valve bracket from the valve mount, and remove the valve bracket from the machine (Figure 73).

   **Note:** Retain the 4 flange-head screws for installation in Installing the Flow Meter Mount and Clamps (page 36); you no longer need the section-valve bracket.

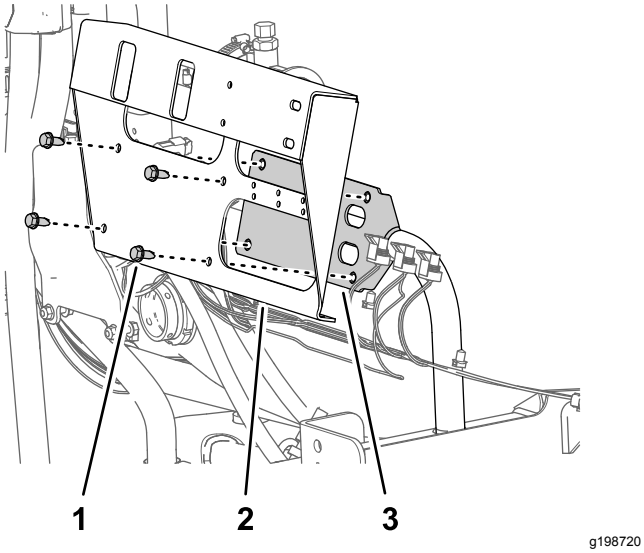


**Figure 73**

1. Flange-head screw (5/16 x 3/4 inch)
2. Section-valve bracket
3. Valve mount

## Installing the Flow Meter Mount and Clamps

1. Align the holes in the flow-meter bracket with the holes in the valve mount (Figure 74).

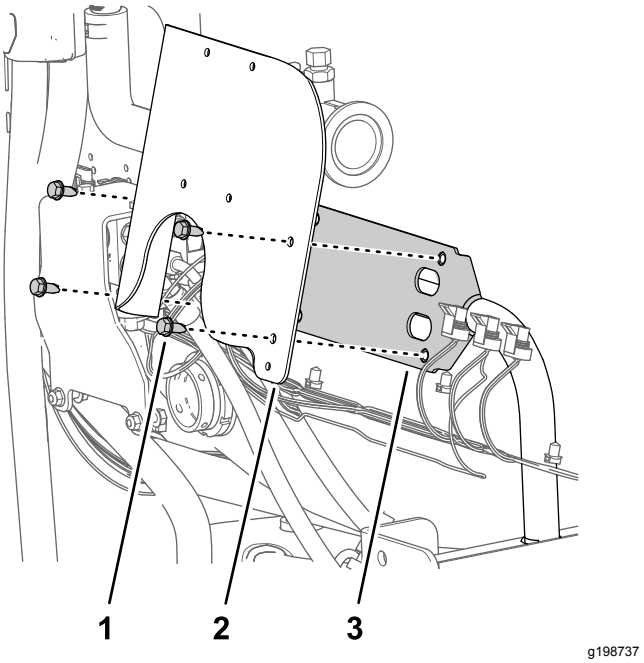


**Figure 74**

1. Flange-head screw (5/16 x 3/4 inch)
2. Flow-meter bracket
3. Valve mount

2. Assemble the flow-meter bracket to the valve mount with the 4 flange-head screws that you removed in step 3 of Removing the Section-Valve Bracket (page 35), and torque the screws to 1978 to 2542 N·cm (175 to 225 in-lb).
3. Align a 2 support-clamp halves between the flow meter and the flow-meter bracket, and align the holes in the clamp halves with the holes in the bracket (Figure 75).

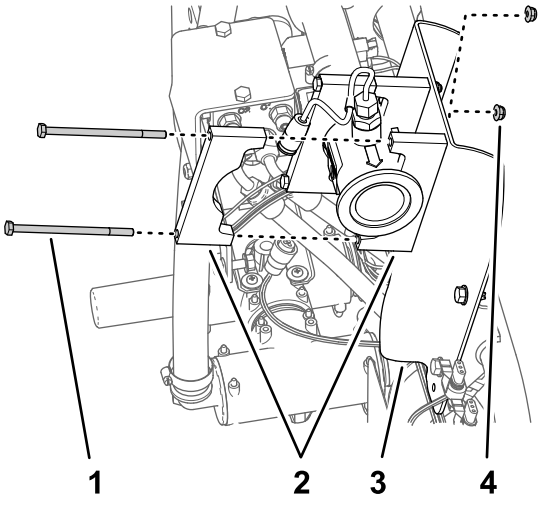


**Figure 75**

1. Bolt (1/4 x 4-1/2 inches)
2. Support-clamp half
3. Flow-meter bracket
4. Flange locknuts (1/4 inch)

4. Align a support clamp half at the rear side of the flow meter with 1 of the clamp halves that you assembled in step 3 (Figure 75).
5. Assemble the pair of clamp halves to the flow meter bracket (Figure 75) with 2 bolts (1/4 x 4-1/2 inches) and 2 flange locknuts (1/4 inch).
6. Repeat steps 4 and 5 at the other clam half that you assembled in step 3.
7. Torque the bolts and nuts to 1017 to 1243 N·cm (90 to 110 in-lb).

# 15

# Assembling the Wire Harness to the Machine

**Parts needed for this procedure:**

| | |
|---|---|
| 1 | Rear wire harness |
| 7 | Cable tie |

## Routing Kit Wire Harness

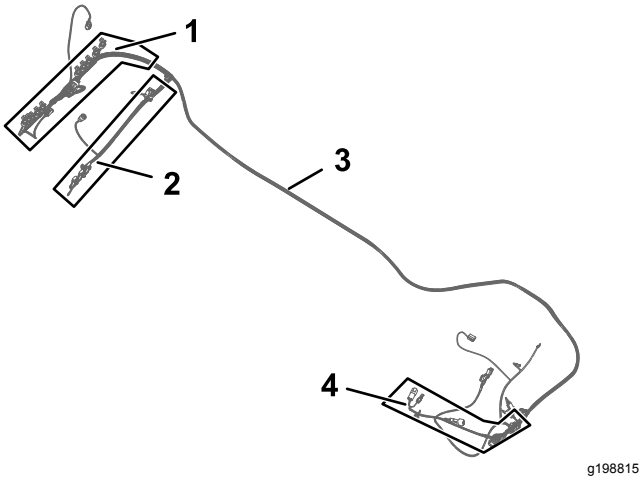


**Figure 76**

1. 102 cm (40 inch) wire-harness branch—ASC10 and NOZZLE-VALVES 1 through 10
2. 89 cm (35 inch) wire-harness branch—RATE VALVE, MASTER VALVE, FLOW METER, LEFT SPRAY, CENTER SPRAY, and RIGHT SPRAY
3. Kit wire harness 457 cm (180 inch)
4. 84 cm (33 inch) wire-harness branch—PUMP CLUTCH

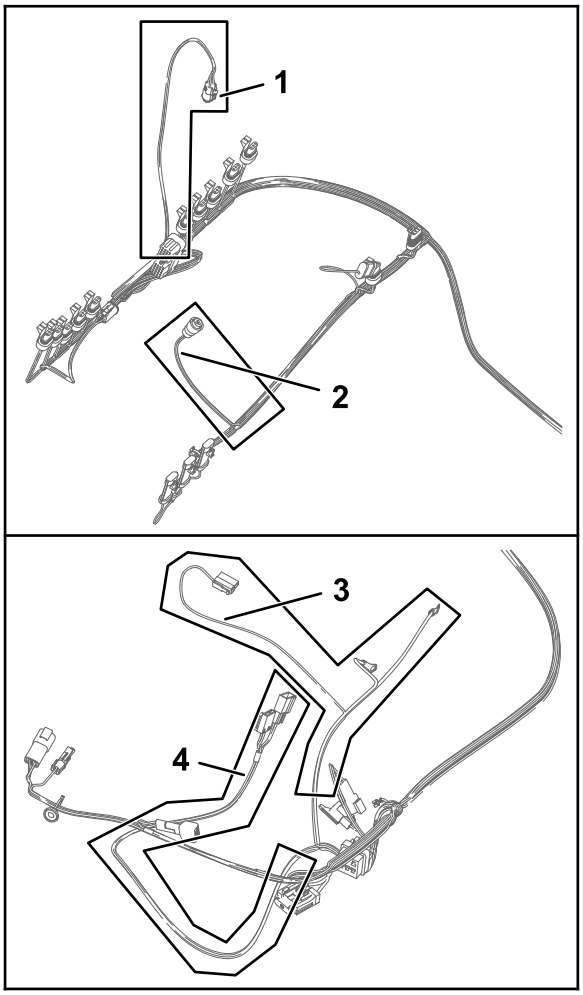


**Figure 77**

1. 61 cm (24 inch) wire-harness branch—PRESSURE TRANSDUCER GREEN WEDGE
2. 23 cm (9 inch) wire-harness branch—FLOW METER
3. 60 cm (23-1/2 inch) wire-harness branch—TO BATTERY POSITIVE, battery negative, and alternator
4. 66 cm (26 inch) wire-harness branch—ASC 10 ENABLE RELAY, 50 A FUSE, DIODE, SW'D PWR FOR GEN 2 TOPCON, and ASC 10 power and CAN from X25

1. Locate the 84 cm (33 inch) wire-harness branch, 60 cm (23-1/2 inch) wire-harness branch, and 66 cm (26 inch) wire-harness branch of the kit wire harness (Figure 76 and Figure 77).
2. Route the 84 cm (33 inch), 60 cm (23-1/2 inch), and 66 cm (26 inch) wire-harness branches of the kit wire harness to the left side of the machine along the machine wire harness (Figure 78 and Figure 79).

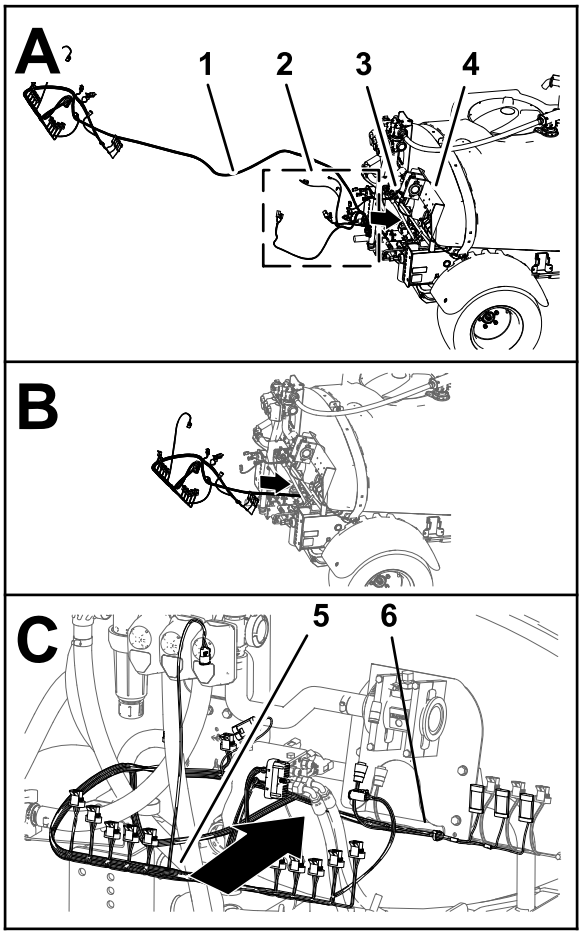


g198861

**Figure 78**

1. Kit wire harness 457 cm (180 inch)
2. 84 cm (33 inch) wire-harness branch, 60 cm (23-1/2 inch) wire-harness branch, and 66 cm (26 inch) wire-harness branch
3. Machine wire harness
4. Manifold mount
5. 102 cm (40 inch) wire-harness branch
6. 89 cm (35 inch) wire-harness branch

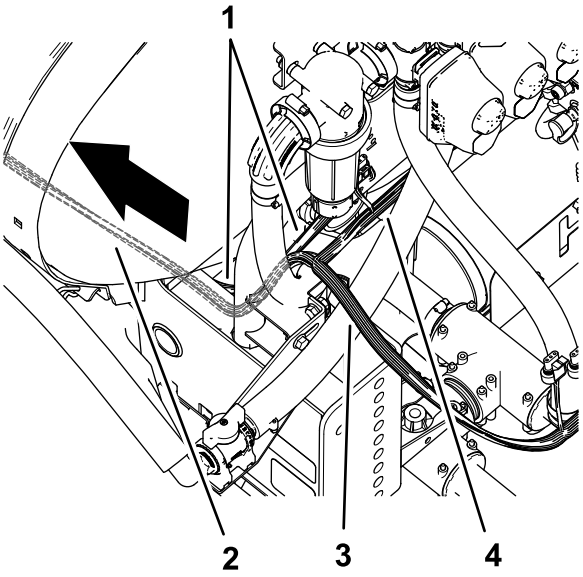


g199037

**Figure 79**

1. Machine wire harness
2. Kit wire harness 457 cm (180 inch)
3. 102 cm (40 inch) wire-harness branch—ASC10 and NOZZLE-VALVES 1 through 10
4. 89 cm (35 inch) wire-harness branch—RATE VALVE, MASTER VALVE, FLOW METER, LEFT SPRAY, CENTER SPRAY, and RIGHT SPRAY

3. Route the 84 cm (33 inch), 60 cm (23-1/2 inch), and 66 cm (26 inch) wire-harness branches of the kit wire harness forward along the left frame channel (Figure 81 and Figure 82).

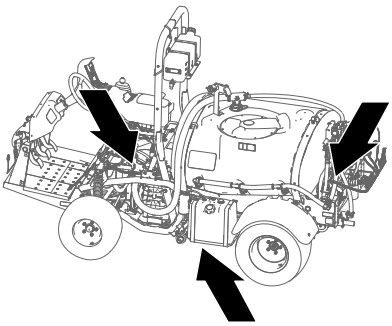

g199043

**Figure 80**

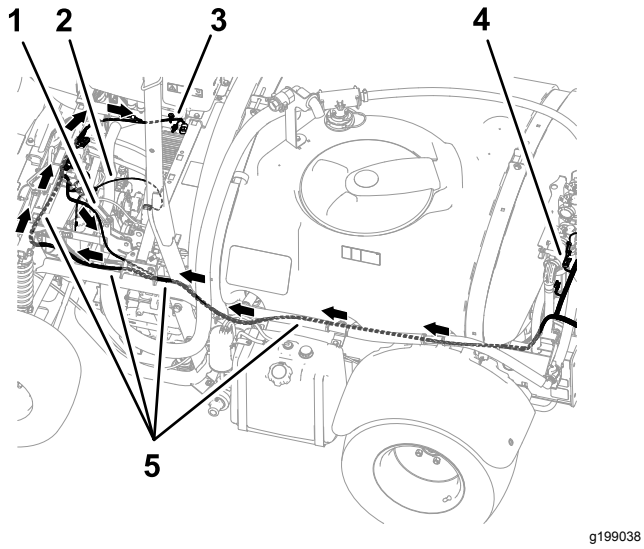


g199038

**Figure 81**

1. 84 cm (33 inches) wire-harness branch—pump clutch
2. 60 cm (23-1/2 inch) wire-harness branch—TO BATTERY POSITIVE, battery negative, and alternator
3. 66 cm (26 inch) wire-harness branch—ASC 10 ENABLE RELAY, 50 A FUSE, DIODE, SW'D PWR FOR GEN 2 TOPCON, and ASC 10 power and CAN from X25
4. 102 cm (40 inch) wire-harness branch—ASC10 and NOZZLE-VALVES 1 through 10
5. Kit wire harness 457 cm (180 inch)

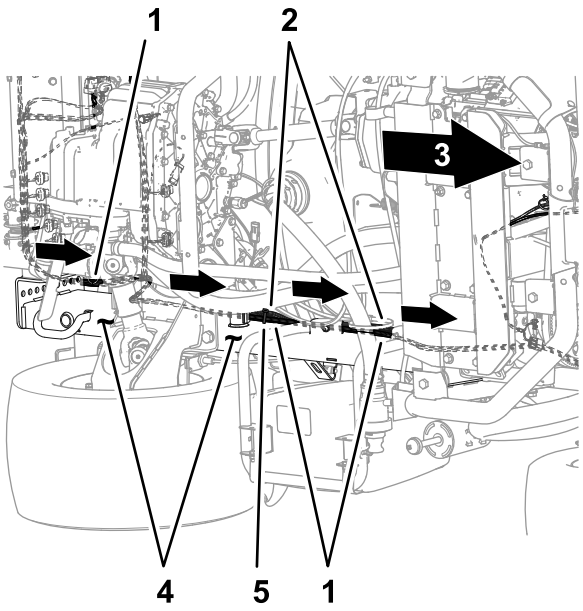


g199039

**Figure 82**

Bottom of the machine

1. Kit wire harness 457 cm (180 inch)
2. Machine wire harness
3. Front of the machine
4. Left frame channel
5. Cable tie

4. Route the 84 cm (33 inch), 60 cm (23-1/2 inch), and 66 cm (26 inch) wire-harness branches of the kit wire harness along the machine wire harness, outboard of the parking-brake assembly (Figure 83).

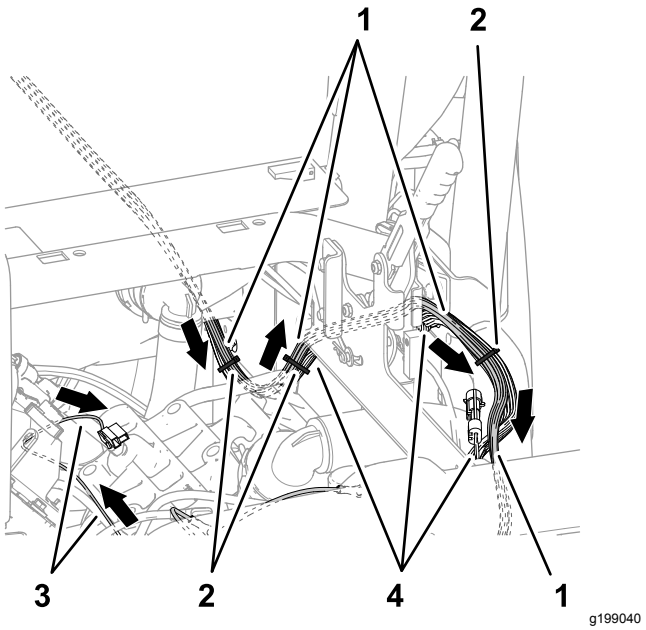


**Figure 83**

1. Kit wire harness 457 cm (180 inch)
2. Cable ties
3. 60 cm (23-1/2 inch) wire-harness branch—TO BATTERY POSITIVE, battery negative, and alternator
4. Machine wire harness

5. Route the 84 cm (33 inch), 60 cm (23-1/2 inch), and 66 cm (26 inch) wire-harness branches of the kit wire harness across the shock-support tube as shown in Figure 84.

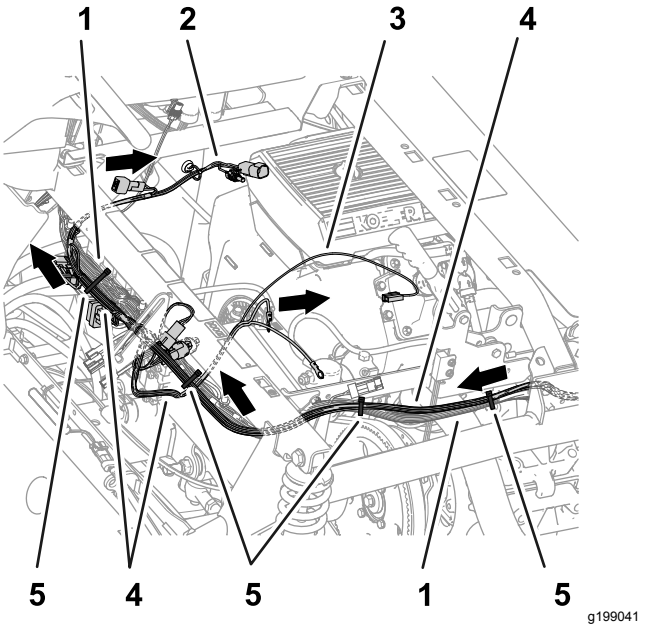


**Figure 84**

1. Machine wire harness
2. 66 cm (26 inch) wire-harness branch—ASC 10 ENABLE RELAY, 50 A FUSE, DIODE, SW'D PWR FOR GEN 2 TOPCON, and ASC 10 power and CAN from X25
3. 60 cm (23-1/2 inch) wire-harness branch—TO BATTERY POSITIVE, battery negative, and alternator
4. Kit wire harness 457 cm (180 inch)
5. Cable ties

6. Secure the kit wire harness to the machine wire harness as shown in Figure 82, Figure 83, and Figure 84.
7. At the back of the machine, route the 89 cm (35 inch) wire-harness branch forward of the lift manifold, and to the right of the flow meter as shown in Figure 85.

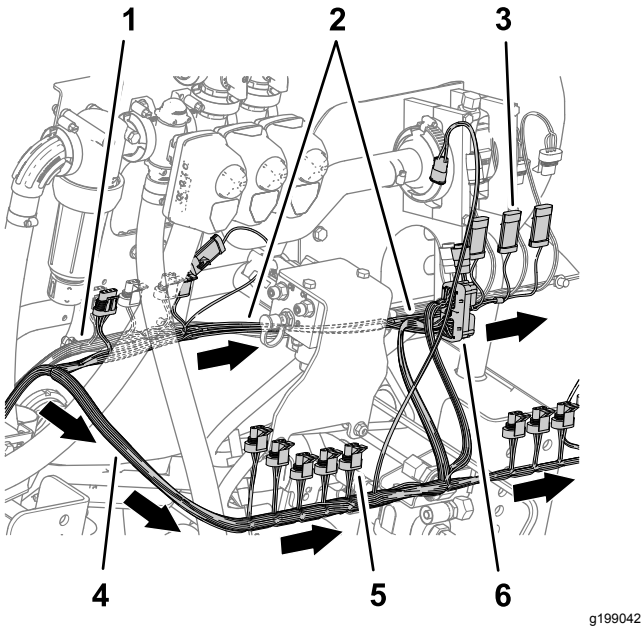


**Figure 85**

1. Machine wire harness
2. 89 cm (35 inch) wire-harness branch—RATE VALVE, MASTER VALVE, FLOW METER, LEFT SPRAY, CENTER SPRAY, and RIGHT SPRAY
3. 3-pin connector (CENTER SPRAY)
4. 3-socket connector (NOZZLE VALVE 5)
5. 102 cm (40 inch) wire-harness branch—ASC10 and NOZZLE-VALVES 1 through 10
6. 40-socket connector (ASC 10)

8. Route the 102 cm (40 inch) wire-harness branch rearward of the lift manifold, and to the right as shown in Figure 85.

## Connecting the Left, Center, and Right Spray-Valve Connectors

1. Connect the 3-pin connector of the 89 cm (35 inch) wire-harness branch labeled LEFT SPRAY to the 3-socket connector of the machine wire harness labeled LEFT SPRAY VALVE (Figure 86).

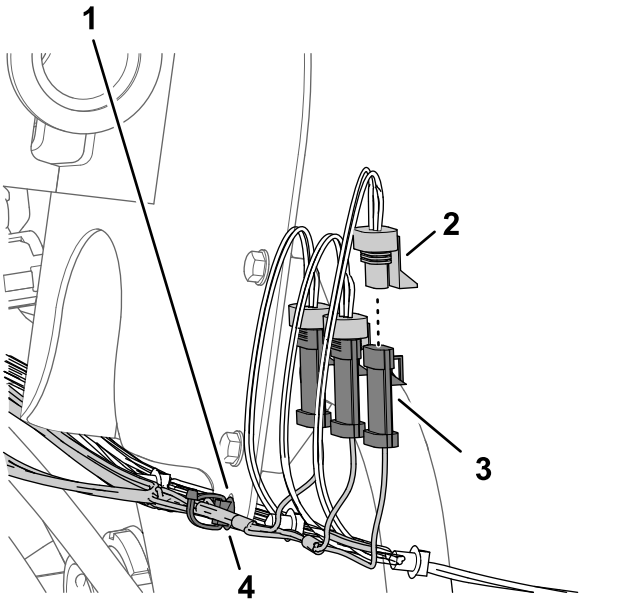


**Figure 86**

1. Flow-meter bracket
2. 3-socket connector—89 cm (35 inch) kit wire-harness branch (RIGHT SPRAY)
3. 3-pin connector (machine wire harness—RIGHT SPRAY VALVE)
4. Push-in fastener

2. Connect the 3-pin connector kit wire harness labeled CENTER SPRAY to the 3-socket connector of the machine wire harness labeled CENTER SPRAY VALVE (Figure 86).
3. Connect the 3-pin connector of the kit wire harness labeled RIGHT SPRAY to the 3-socket connector of the machine wire harness labeled RIGHT SPRAY VALVE (Figure 86)
4. Insert the push-in fastener of the kit wire harness into the hole in the flange of the flow-meter bracket (Figure 86).

## Connecting the Flow Meter, Master Section Valve, and Rate Valves Electrical Connectors

1. Connect the 3-socket electrical connector of the 89 cm (35 inch) wire-harness branch labeled FLOW METER into the 3-pin connector of the flow meter (Figure 87).

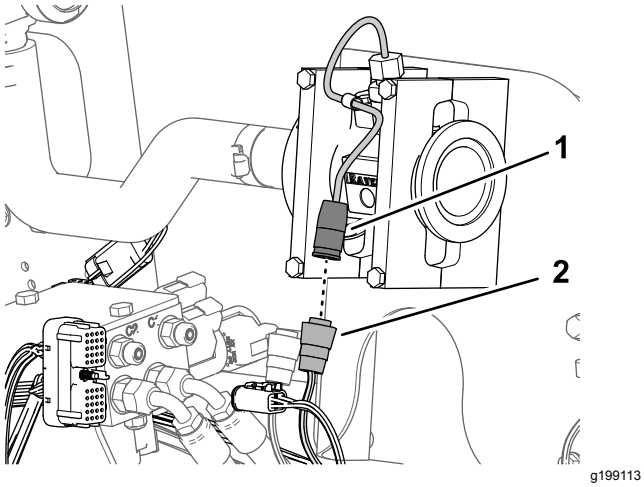


**Figure 87**

1. 3-pin connector (flow meter)
2. 3-socket electrical connector (89 cm (35 inch) kit wire-harness branch—FLOW METER)

2. Connect the 3-pin connector of the 89 cm (35 inch) kit wire-harness branch labeled MASTER VALVE into the 3-socket connector of the machine wire harness labeled MASTER SPRAY VALVE (Figure 88).

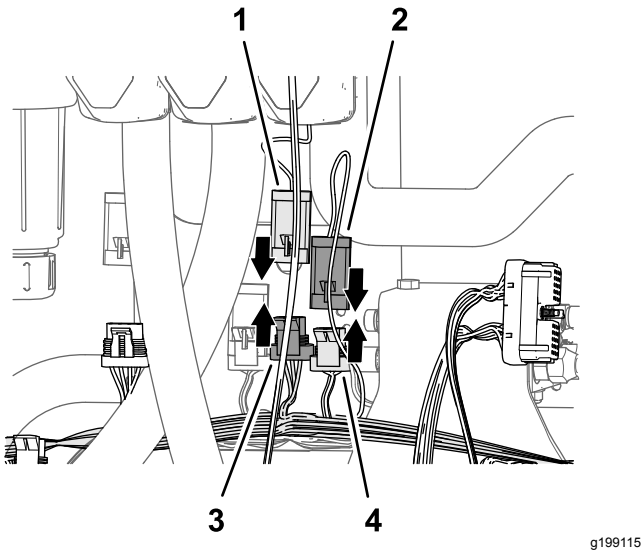


**Figure 88**

1. 3-pin connector(actuator—master -spray valve)
2. 3-pin connector (89 cm (35 inch) kit wire-harness branch—MASTER VALVE)
3. 3-pin connector (89 cm (35 inch) kit wire-harness branch—MASTER VALVE)
4. 3-socket connector (machine wire harness—MASTER SPRAY VALVE)

3. Connect 3-pin connector of the actuator for the master-spray valve into the 3-socket connector of the 89 cm (35 inch) kit wire-harness branch labeled MASTER VALVE (Figure 88).

4. Connect the 4-pin connector of the actuator for the rate valve into the 4-socket connector of the 89 cm (35 inch) kit wire-harness branch labeled RATE VALVE (Figure 89).

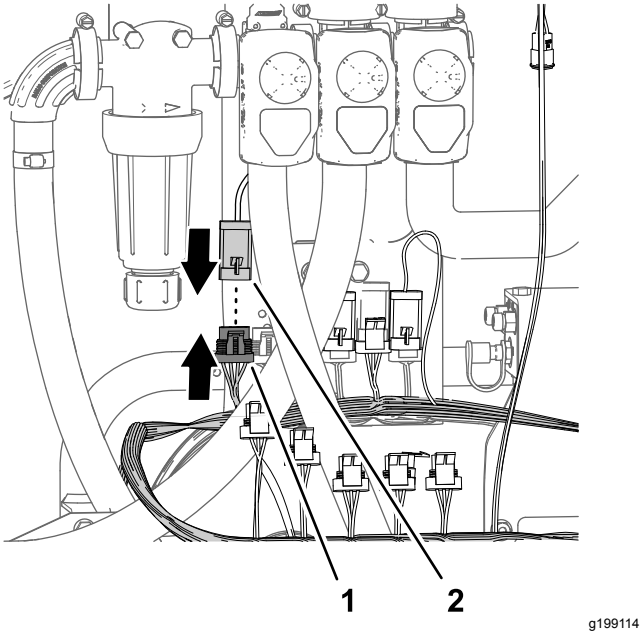


**Figure 89**

1. 4-socket connector ((89 cm (35 inch) kit wire-harness branch—RATE VALVE)
2. 4-pin connector(actuator—rate valve)

# 16

# Assembling the Flow-Meter Manifold

**Parts needed for this procedure:**

| | |
|---|---|
| 1 | Straight hose barb (1 x 2 inches) |
| 3 | Hose clamp (3/4 to 1-1/2 inches) |
| 1 | Hose (1 x 5-3/4 inches) |
| 1 | Manifold |
| 1 | Hose (1 x 16 inches) |

## Assembling the Manifold

1. Assemble hose (1 x 5-3/4 inches) on to the straight hose barb (1 x 2 inches) with a hose clamp (3/4 to 1-1/2 inches), and tighten the clamp by hand (Figure 90).

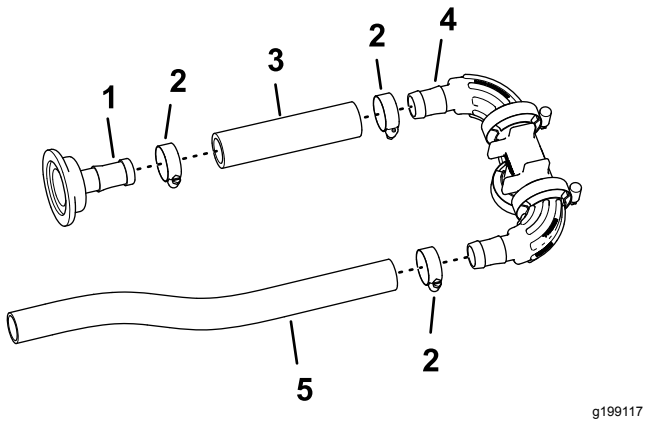


g199117

**Figure 90**

1. Straight hose barb (1 x 2 inches)
2. Hose clamp (3/4 to 1-1/2 inches)
3. Hose (1 x 5-3/4 inches)
4. Manifold
5. Hose (1 x 16 inches)

2. Assemble the other end of the hose (1 x 5-3/4 inches) onto the barbed fitting of the manifold with a hose clamp as shown in Figure 90, and tighten the hose clamp by hand.
3. Assemble the hose (1 x 16 inches) onto the other barbed fitting of the manifold with a hose clamp, and tighten the clamp by hand (Figure 90).

## Assembling the Manifold to the Flow Meter

1. Assemble the straight hose barb (1 x 2 inches) to the flange of the flow meter with the gasket 38 mm (1-1/2 inches) and flange clamp 51 mm (2 inches) that you removed in step 6 of Removing the Section Valves from the Manifold Mount (page 34).

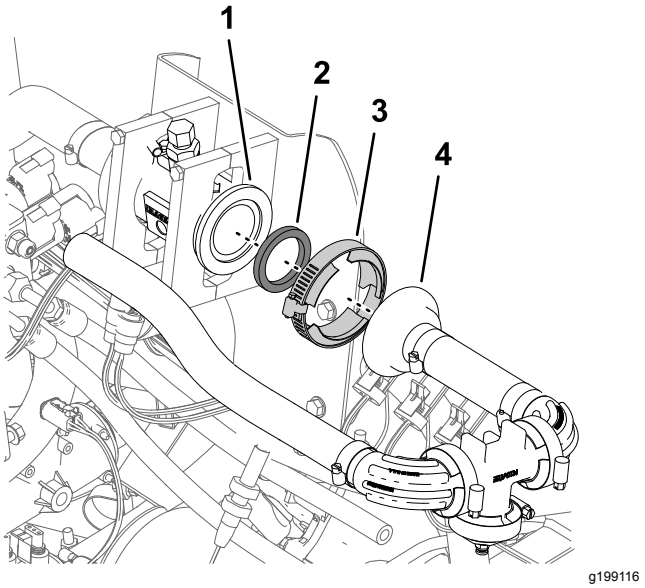


g199116

**Figure 91**

1. Flange (flow meter)
2. Gasket 38 mm (1-1/2 inches)
3. Flange clamp 51 mm (2 inches)
4. Straight hose barb (1 x 2 inches)

2. Tighten the flange clamp by hand (Figure 91).

# 17

# Installing the Bypass Hoses to the Tank

**Parts needed for this procedure:**

| | |
|---|---|
| 2 | 90° quick-connect fitting (socket—1 inch) |
| 2 | Hose (1 x 26 inches) |
| 5 | Hose clamp (3/4 x 1-1/5 inches) |
| 1 | T-fitting (1 x 1 x 1 inch) |
| 1 | 90° barbed fitting and hose assembly |
| 1 | Shutoff valve |

## Assembling the Bypass Hoses

1. Assemble the 90° quick-connect fitting (socket—1 inch) into the hose (1 x 26 inches) and secure the hose to the fitting with a hose clamp as shown in Figure 92.

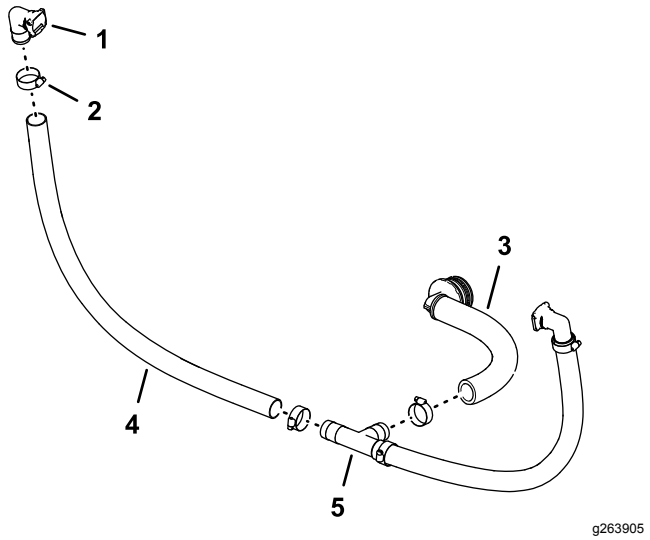


**Figure 92**

1. 90° quick-connect fitting (socket—1 inch)
2. Hose clamp (3/4 x 1-1/5 inches)
3. 90° barbed fitting and hose assembly
4. Hose (1 x 26 inches)
5. T-fitting (1 x 1 x 1 inch)

2. Assemble the free end of the hose onto the T-fitting as shown in Figure 92 and secure the hose to the fitting with a hose clamp.
3. Repeat steps 1 through 2 for the other 90° barbed fitting, quick-connect fitting, and hose.
4. Assemble the 90° barbed fitting and hose assembly onto the T-fitting and secure the hose to the fitting with a hose clamp (Figure 92).

# Assembling the Shutoff Valve to the Bypass Hose

## Machines with the Optional Hand Wand Kit or the Optional Electric Hose Reel Kit

1. As shown in Figure 93, remove the retainer from the 90° quick-connect fitting that you assembled in Assembling the Bypass Hoses (page 43).

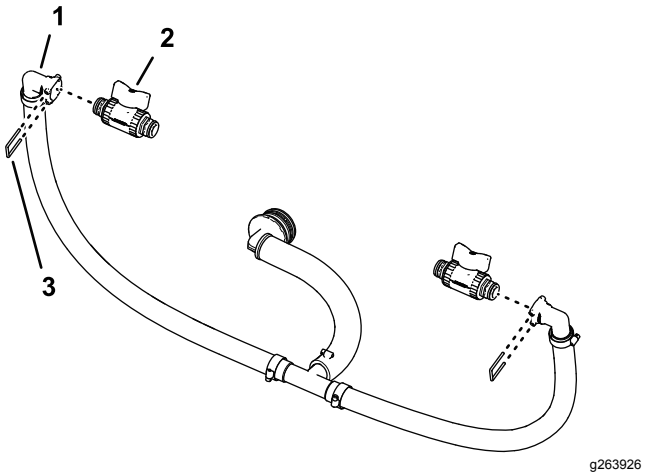


**Figure 93**

1. Quick-disconnect coupling (90° barbed fitting)
2. Shutoff valve
3. Retainer

2. Assemble the shutoff valve into the quick-disconnect fitting socket (Figure 93).
3. Secure the valve to the fitting with the retainer that you removed in step 1.
4. Assemble the shutoff valve and retainer that you removed in step 1 of Removing the Section Bypass Hose (page 31) to the other quick-disconnect fitting socket (Figure 93).

# Assembling the Bypass Hoses to the Tank

1. Align the bypass hose assembly to the sprayer tank (Figure 94).

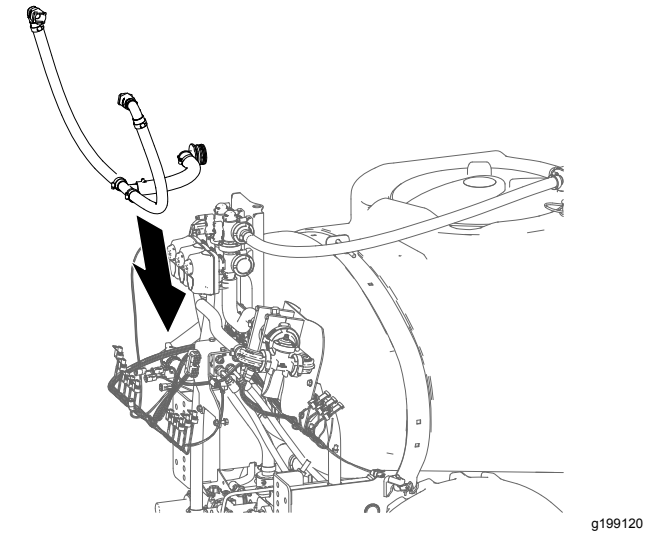


**Figure 94**

1. 90° barbed fitting (bypass hose assembly)
2. Bulkhead fitting (sprayer tank)
3. Retainer

2. Assemble the 90° barbed fitting to the bulkhead fitting of the sprayer tank and secure the fittings with the retainer that you removed in step 2 of Removing the Section Bypass Hose (page 31).

# 18

# Installing the Modified Center-Spray Section

**No Parts Required**

## Procedure

**Lifting-equipment capacity:** 55 kg (120 lb)

1. Using lifting equipment with the specified lift capacity, raise the center-spray section and align the holes in the support bracket for the spray section (Figure 95) with the holes in the mounting plate for the frame of the machine that you identified in step 3 of Removing the Center-Spray Section (page 25).

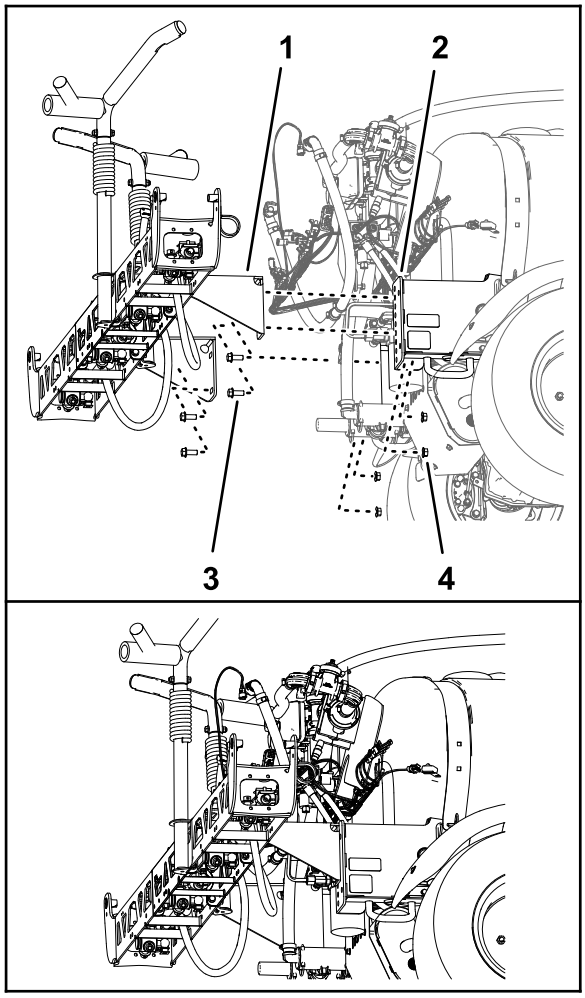


g199121

**Figure 95**

1. Support bracket (center-spray section—10-sprayer-valve system)
2. Flange-head bolt (1/2 x 1-1/4 inches)
3. Mounting channel (frame of the machine)
4. Flange locknut (1/2 inch)

2. Assemble the center-spray section to the mounting channels (Figure 95) with the 4 flange-head bolt (1/2 x 1-1/4 inches) and 4 flange locknut (1/2 inch) that you removed in step 4 in Removing the Center-Spray Section (page 25).
3. Torque the nuts and bolts to 91 to 113 N·m (67 to 83 ft-lb).

# 19

# Assembling the Lift Cylinder Manifold to the Cylinder Mount

**No Parts Required**

## Procedure

1. Untie the lift manifold from the valve-mount bracket.
2. Assemble the section lift manifold to the cylinder mount as follows:
   - **For machines without the optional ultra sonic boom leveling kit:**
     A. Align the holes in the support bracket for the section-lift manifold with the holes in the cylinder mount (Figure 96).

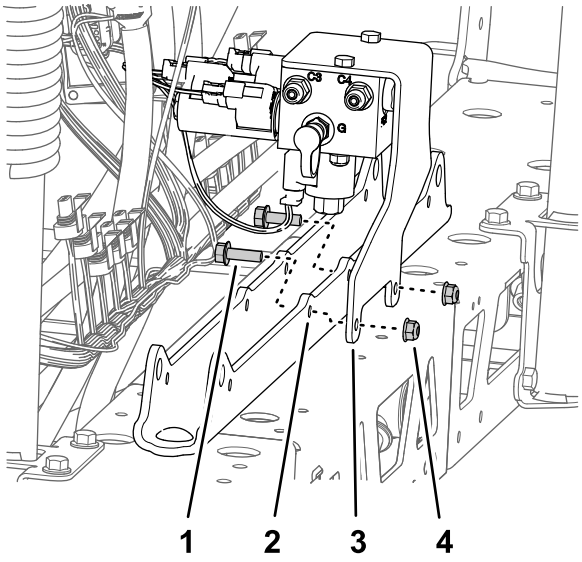


g199754

**Figure 96**

1. Flange-head bolt (5/16 x 1 inch)
2. Cylinder mount
3. Support bracket (section-lift manifold)
4. Flange locknut (5/16 inch)

     B. Assemble the support bracket to the cylinder mount (Figure 96) with the 2 flange-head bolt (5/16 x 1 inch) and flange locknut (5/16 inch) that you removed in step 1 of Removing the Section-Lift Manifold from the Center-Spray Section (page 24).
   - **For machines with the optional ultra sonic boom leveling kit:**

A. Align the holes in the support bracket for the section-lift manifold and the TEC controller bracket with the holes in the cylinder mount.

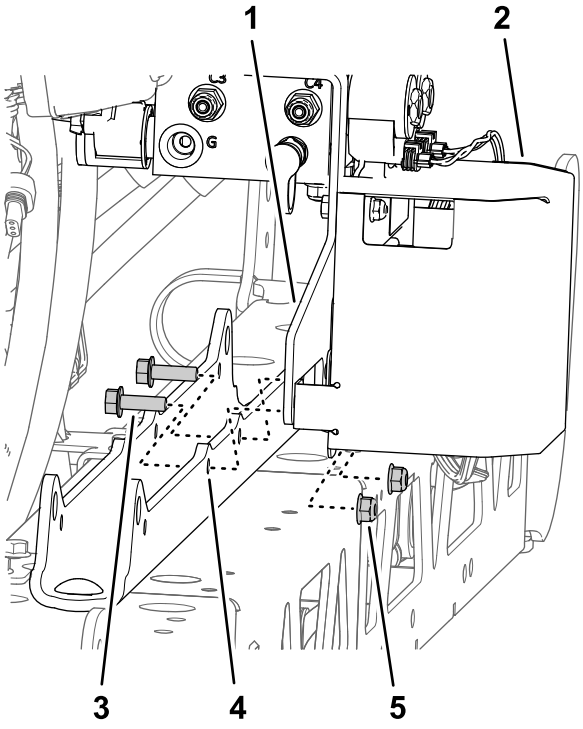


**Figure 97**

1. Support bracket (section-lift manifold)
2. TEC controller bracket
3. Flange-head bolt (5/16 x 1 inch)
4. Cylinder mount
5. Flange locknut (5/16 inch)

B. Assemble the support bracket and TEC bracket to the cylinder mount (Figure 97) with the 2 flange-head bolt (5/16 x 1 inch) and flange locknut (5/16 inch) that you removed in step 1 of Removing the Section-Lift Manifold from the Center-Spray Section (page 24).

3. Torque the bolts and nuts to 1978 to 2542 N·cm (175 to 225 in-lb).

# 20

# Installing the Valve Mount and Sprayer Valves

**Parts needed for this procedure:**

| | |
|---|---|
| 1 | Valve mount and sprayer-valve assembly |
| 3 | Bolt (4 x 10 mm) |
| 1 | ASC 10 sprayer controller |
| 3 | Flange locknut (4 mm) |
| 2 | Cap (quick-disconnect fitting) |
| 8 | Flange-head bolts (5/16 x 3/4 inch) |
| 8 | Flange locknuts (5/16 inch) |
| 1 | Hose clamp |
| 1 | Push-in fastener (cable tie) |
| 3 | Push-in fastener (connector anchor) |

## Assembling the Sprayer Controller to the Valve Mount

1. Align the ASC 10 sprayer controller to the forward side of the valve mount with the 4-pin connector outward (Figure 98).

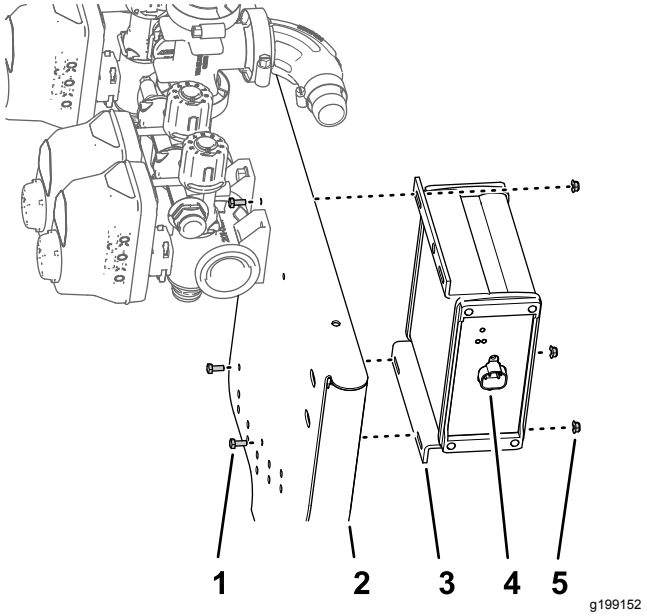


**Figure 98**

1. Bolt (4 x 10 mm)
2. 10-valve mount
3. ASC 10 sprayer controller
4. 4-pin connector
5. Flange locknut (4 mm)

2. Assemble the sprayer controller to the valve mount (Figure 98) with the 3 bolts (4 x 10 mm) and 3 flange locknuts (4 mm).

   **Note:** Do not use the upper outboard hole in the ASC 10 sprayer controller.

3. Torque the bolts and nuts to 234 to 286 N·cm (21 to 25 to in-lb).

## Positioning the Bypass Valves—Machines with the Optional Hand Wand Kit or the Optional Electric Hose Reel Kit

1. Remove the retainers that secure the valve actuators for nozzle valves 1 through 7 (Figure 99).

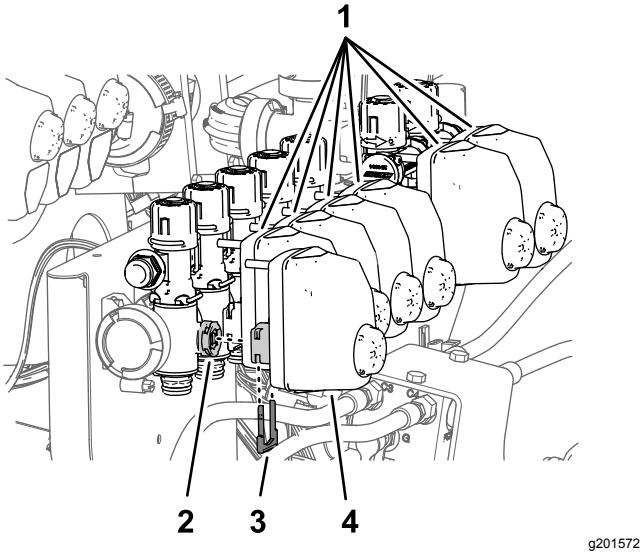


g201572

**Figure 99**

1. Valve actuators (nozzle valves 2 through 7)
2. Valve stem (nozzle valve 1)
3. Retainer
4. Valve actuator (nozzle valves 1)

2. Remove the valve actuators from nozzle valves 1 through 7 (Figure 99).
3. Remove the retainers that secures the plugs in the sockets of the quick disconnect fitting at the nozzle valve 5 and nozzle valve 6, and remove the plugs (Figure 100).

   **Note:** You no longer need the plugs; retain the retainers for installation in Installing the Section Bypass Hoses—Machines with the Optional Hand Wand Kit or the Optional Electric Hose Reel Kit (page 52).

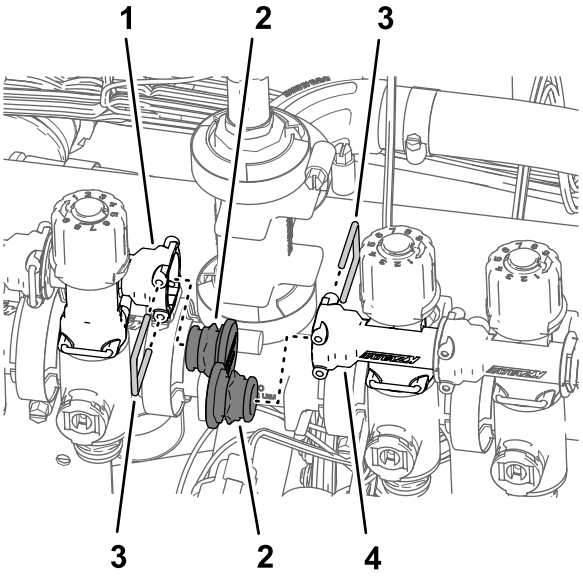


g201570

**Figure 100**

1. Quick-disconnect fitting—socket (bypass valve of nozzle-valve 5)
2. Cap (quick-disconnect fitting)
3. Retainer
4. Quick-disconnect fitting—socket (bypass valve of nozzle-valve 6)

4. Remove the retainers that secure the bypass valves to nozzle valves 1 through 7 (Figure 101).

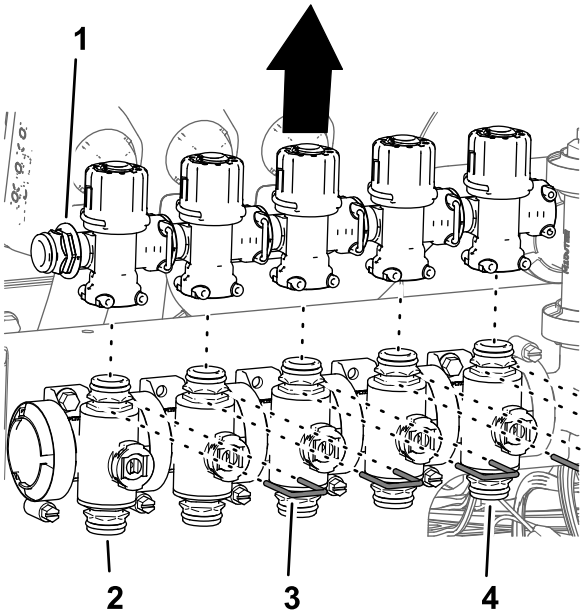


g201568

**Figure 101**

1. Quick-disconnect fitting—plug
2. Nozzle valve 1
3. Retainer
4. Nozzle valve 5

5. Lift the bypass valves from the nozzle valves 1 through 5 (Figure 101).

6. Rotate the bypass valves 180° and assemble them onto the quick disconnect fittings of the section valves (Figure 102).

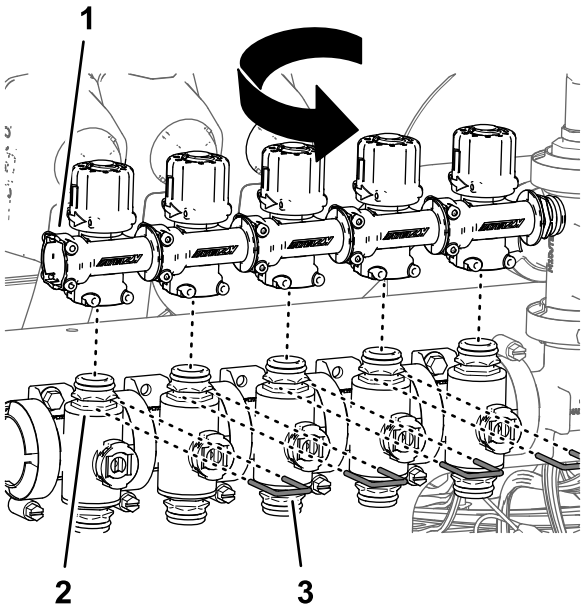


g201573

**Figure 102**

1. Quick-disconnect fitting—socket (align outward)
2. Nozzle valve 1
3. Retainer

7. Secure the bypass valves to the section valves with the retainers (Figure 102) that you removed in step 4.
8. Repeat steps 5 through 7 for the bypass valves of nozzle valve 6 and nozzle valve 7 (Figure 103).

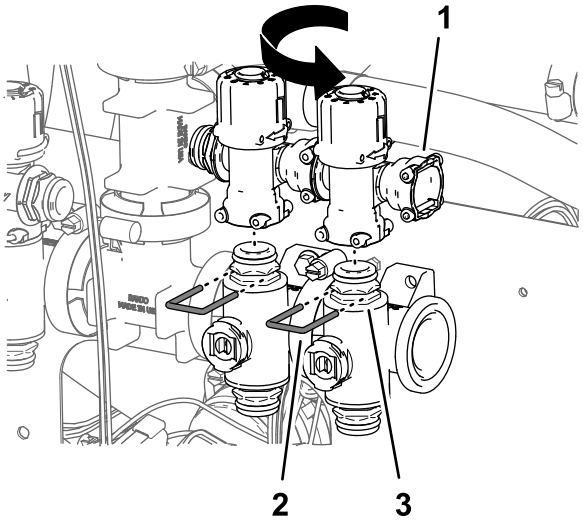


g201625

**Figure 103**

1. Quick-disconnect fitting—socket (align outward)
2. Retainer
3. Nozzle valve 7

9. Assemble the caps onto the quick disconnect fittings of the bypass valves for nozzle-valve 5 and nozzle-valve 6 with the retainers provided with the caps (Figure 102).

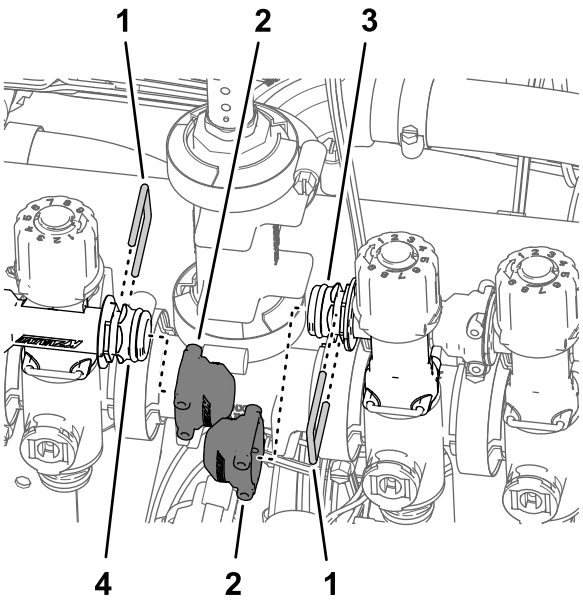


g201567

**Figure 104**

1. Retainer
2. Cap (quick-disconnect fitting)
3. Quick-disconnect fitting—plug (bypass valve of nozzle-valve 5)
4. Quick-disconnect fitting—plug (bypass valve of nozzle-valve 6)

10. Assemble the valve actuators onto the nozzle valves 1 thought 7 (Figure 99) with the retainers that you removed in step 1.

# Assembling the 3 Section Valves to the Valve Mount

1. Assemble the 3 section valves (Figure 105) that you removed in step 8 of Removing the Section Valves from the Manifold Mount (page 34) onto the flange of valve 7 of the sprayer valve assemble with the flange clamp and gasket that you removed in step 4 of Removing the Section Valves from the Manifold Mount (page 34).

   ***Important:*** **The left, center, and right section valves are identified in the GeoLink sprayer system as follows: left section valve—nozzle valve 8, center section valve—nozzle valve 9, and right section valve—nozzle valve 10.**

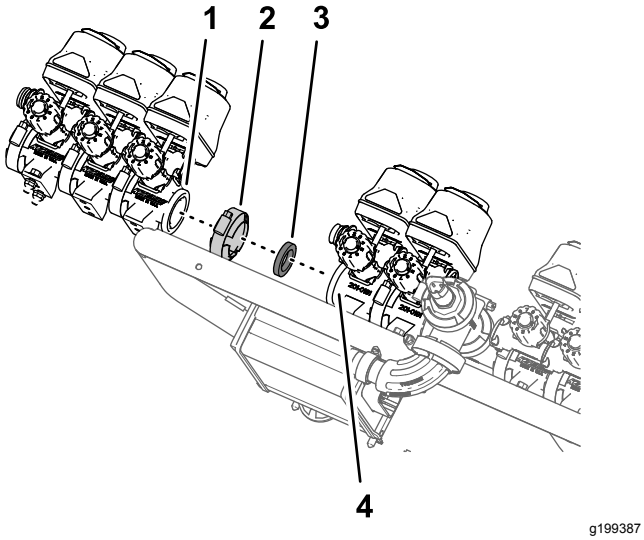


**Figure 105**

1. Flange—section valve (left sprayer section—nozzle valve 8)
2. Flange clamp
3. Gasket
4. Flange—nozzle valve 7 (GeoLink sprayer valve assembly)

2. Secure the socket of the quick-disconnect coupling for bypass valve of nozzle valve 8 to the quick-disconnect coupling for bypass valve of nozzle valve 7 with the retainer that you removed in step 8 of Removing the Section Valves from the Manifold Mount (page 34).

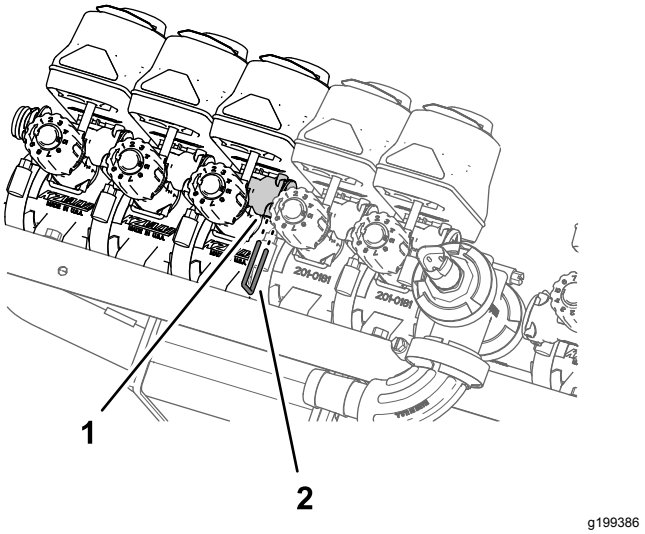


**Figure 106**

1. Quick-disconnect coupling (socket—bypass valve)
2. Retainer

3. Assemble nozzle valve 10 to the valve mount (Figure 107 or Figure 108) the with the 2 flange-head bolt (1/4 x 3/4 inch) and 2 locknut (1/4 inch) that you removed in step 2 of Removing the Section Valves from the Manifold Mount (page 34).

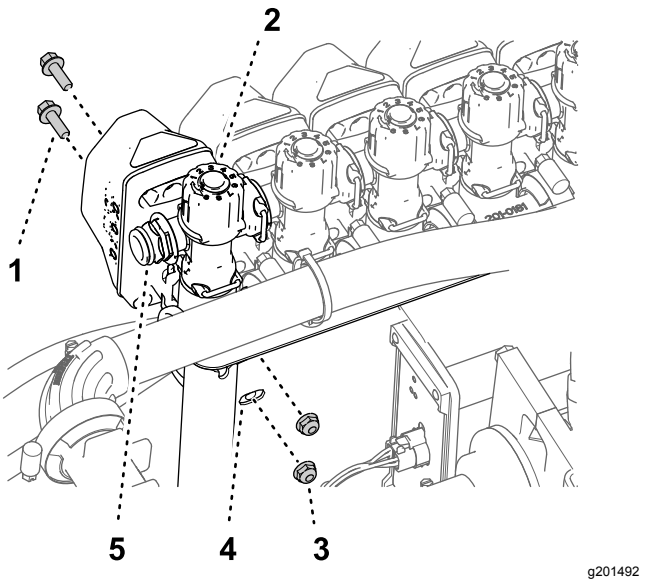


**Figure 107**

Machines without the Hand Spray Wand Kit or the Electric Hose Reel Kit

1. Flange-head bolt (1/4 x 3/4 inch)
2. Nozzle valve 10
3. Locknut (1/4 inch)
4. Valve mount
5. Quick-disconnect fitting (plug)

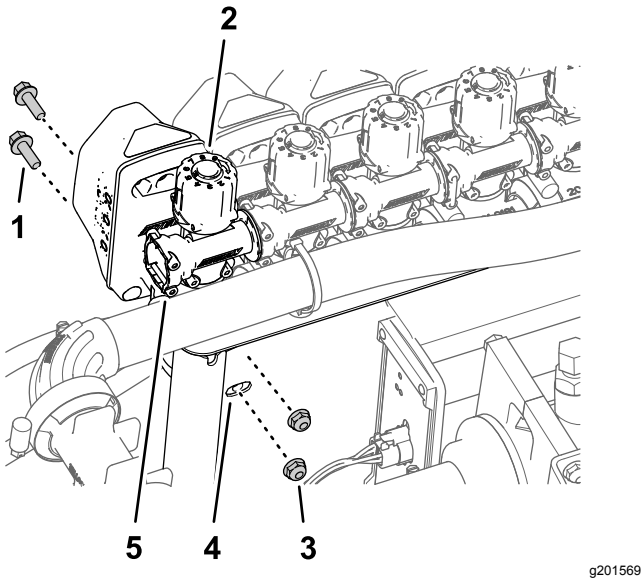


**Figure 108**

Machines with the Hand Spray Wand Kit or the Electric Hose Reel Kit

1. Flange-head bolt (1/4 x 3/4 inch)
2. Nozzle valve 10
3. Locknut (1/4 inch)
4. Valve mount
5. Quick-disconnect fitting (socket)

4. Torque the flange-head bolts and locknuts to 1017 to 1243 N·m (90 to 120 in-lb).

## Assembling the Valve Mount and Sprayer Valve Assembly to the Machine

**Lifting-equipment capacity:** 23 kg (50 lb)

1. Using lifting equipment with the specified capacity, lift the valve mount and sprayer valve assembly and align it over the center-spray section (Figure 109).

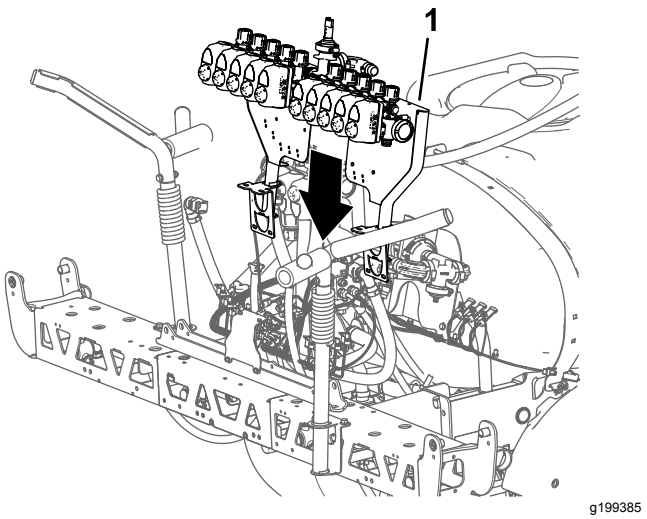


**Figure 109**

1. Valve mount and sprayer-valve assembly

2. Align the holes on the mount bracket of the valve mount to the holes on the truss frame of the center sprayer section (Figure 110).

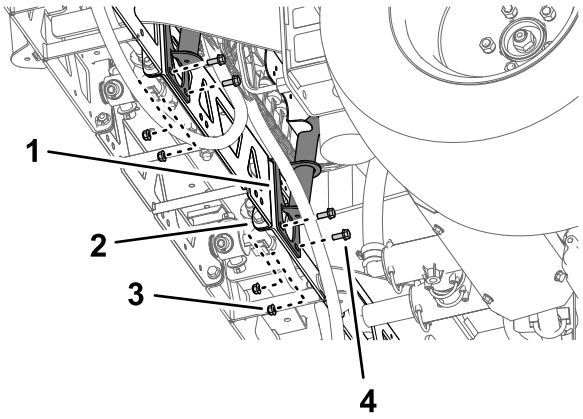


**Figure 110**

1. Bracket (valve mount)
2. Truss frame (center sprayer section)
3. Flange locknut (5/16 inch)
4. Flange head bolt (5/16 x 3/4 inch)

3. Assemble the valve mount to the truss frame (Figure 110 and Figure 111) with 4 bolts (5/16 x 3/4 inch) and 4 flange locknuts (5/16 inch).

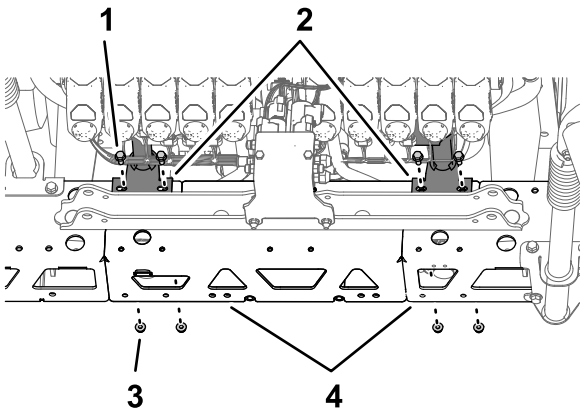

g199541

**Figure 111**

1. Flange head bolt (5/16 x 3/4 inch)
2. Bracket (valve mount)
3. Flange locknut (5/16 inch)
4. Truss frame (center sprayer section)

4. Repeat steps 2 through 3 for the other mount bracket of the valve mount at the other truss frame.
5. Torque the flange-head bolts and flange locknuts to 1978 to 2542 N·cm (175 to 225 in-lb).

## Assembling the Hose to the Sprayer Valve Manifold

1. Assemble the hose (1 x 16 inches) over the 90° flange fitting (1 inch) as shown in Figure 112.

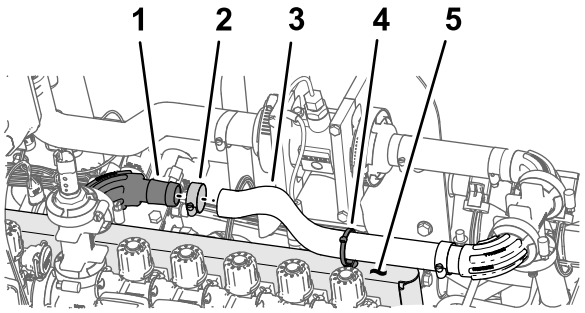

g199542

**Figure 112**

1. 90° flange fitting (1 inch)
2. Hose clamp
3. Hose (1 x 16 inches)
4. Push-in fastener (cable tie)
5. Valve mount

2. Secure the hose to the flange fitting with a hose clamp (Figure 112).
3. Assemble the cable tie/push-in fastener into the hole at the top of the valve mount as shown in Figure 112.
4. Secure the cable tie/push-in fastener (Figure 112) around the hose (1 x 16 inches).

## Installing the Section Bypass Hoses—Machines without the Optional Hand Wand Kit or the Optional Electric Hose Reel Kit

1. Remove the retainers from the sockets of the quick-connect fittings that you assembled to the bypass hoses in step 1 of Assembling the Bypass Hoses (page 43).
2. Assemble the quick-connect fitting of the bypass hose to the quick disconnect fitting at the bypass valve at nozzle valve 10 (Figure 113).

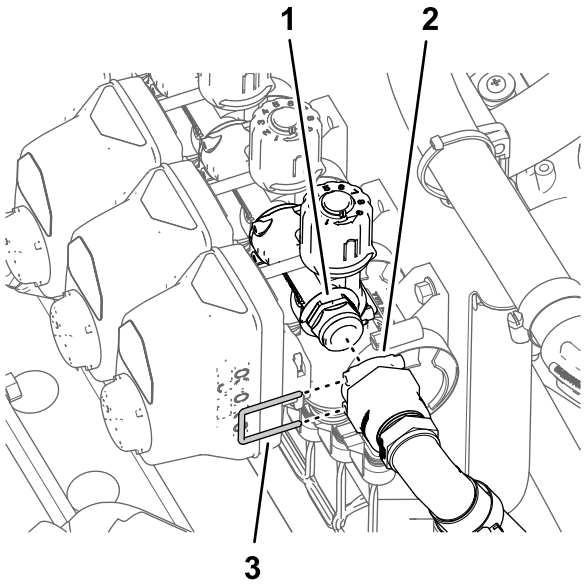

g199847

**Figure 113**

1. Quick disconnect fitting (bypass valve)
2. Sockets—quick-connect fittings
3. Retainer

3. Secure the quick disconnect fittings for the bypass hose and the bypass valve with the retainer (Figure 113).
4. Repeat steps 1 through 3 for the quick disconnect fittings at nozzle valve 1.

## Installing the Section Bypass Hoses—Machines with the Optional Hand Wand Kit or the Optional Electric Hose Reel Kit

1. Assemble the quick-disconnect fitting of the bypass-shutoff valve with the quick disconnect fitting (socket) of the bypass valve (Figure 114).

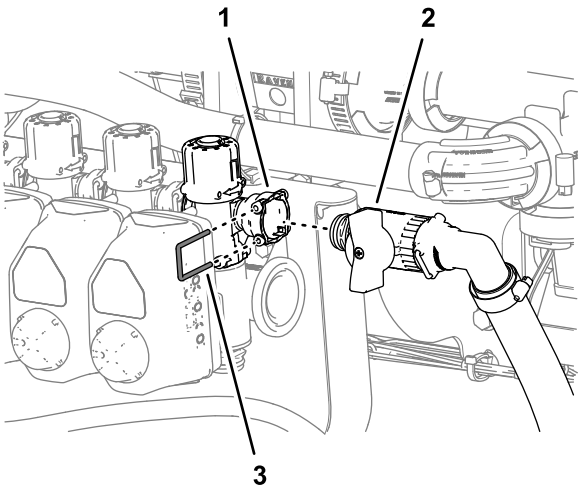


g264554

**Figure 114**

1. Quick-connect fitting—socket (nozzle valve 10)
2. Shutoff valve (hand wand or electric hose reel kit)
3. Retainer

2. Secure the quick disconnect fittings for the bypass-shutoff valve and the bypass valve with the retainer (Figure 114) that you removed in step 3 of Positioning the Bypass Valves—Machines with the Optional Hand Wand Kit or the Optional Electric Hose Reel Kit (page 48).
3. Repeat steps 1 and 2 for the bypass-shutoff valve and the bypass valve at the other side of the machine.

# Installing the Nozzle Valve Electrical Connectors

1. Assemble the connector anchor push-in fasteners onto the holes in the valve mount (Figure 115).

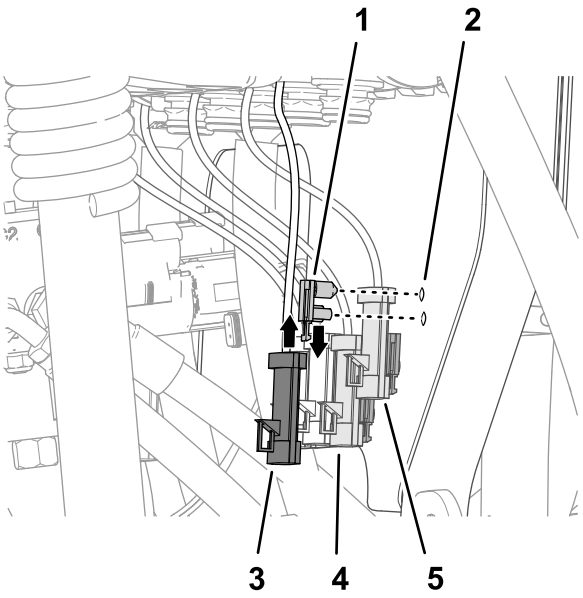


g199981

**Figure 115**

1. Push-in fastener (connector anchor)
2. Valve mount
3. 3-pin connector (valve actuator—position 10)
4. 3-pin connector (valve actuator—position 8)
5. 3-pin connector (valve actuator—position 9)

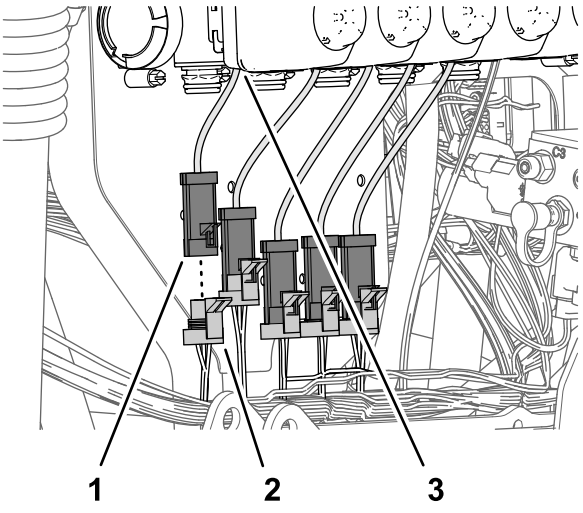


g199980

**Figure 116**

1. 3-pin connector (valve actuator—position 1)
2. 3-socket connector—89 cm (35 inch) kit wire-harness branch (NOZZLE VALVE 1)
3. Valve actuator (position 1)

2. Connect 3-socket connector (Figure 116) of the 89 cm (35 inch) kit wire-harness branch labeled NOZZLE VALVE 1) into the 3-pin connector of the left most valve actuator (position 1).

   **Note:** The valve actuator positions 1 through 10 are arranged from left to right when standing behind the machine.

3. Connect 3-socket connector (Figure 116) of the 89 cm (35 inch) kit wire-harness branch labeled NOZZLE VALVE 2) into the 3-pin connector of the valve actuator (position 2).

4. Connect the remaining 3-socket connectors of the 89 cm (35 inch) kit wire-harness branch into the 3-pin connector of the valve actuators (Figure 116).

   **Note:** Ensure that the 3-socket connector are connected to the related valve actuator position.

# 21

# Assembling the Boom-Lift Cylinders

**Parts needed for this procedure:**

| | |
|---|---|
| 4 | Hydraulic hose (1/4 x 24-3/4 inches) |

## Assembling the Lift Cylinders

1. Align the fixed end of the lift cylinder that you removed in step 3 of Removing the Lift Cylinders (page 23) to the 16 mm (5/8 inch) hole in the cylinder mount (Figure 117).

   **Note:** Ensure that the extend and retract ports of the cylinder align up.

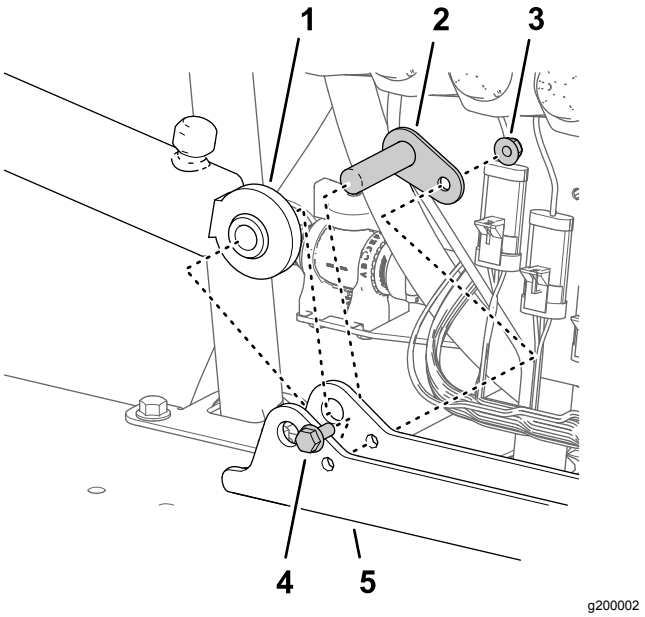


**Figure 117**

1. Lift cylinder (fixed end)
2. Pivot pin
3. Flange locknut (5/16 inch)
4. Flange-head bolt (5/16 x 3/4 inch)
5. Cylinder mount

2. Assemble the cylinder to the cylinder mount with the pivot pin, flanged-head bolt, and flange nut (Figure 117).

3. Torque the bolt and nut to 1978 to 2542 N·cm (175 to 225 in-lb).

4. Repeat steps 1 through 3 for the other lift cylinder at the other side of the cylinder mount.

# Installing the Lift-Cylinder Hoses

1. Loosely assemble a new hydraulic hose (1/4 x 24-3/4 inches) between the extend port of the left boom-lift cylinder and port C3 of the boom-lift manifold (Figure 118).

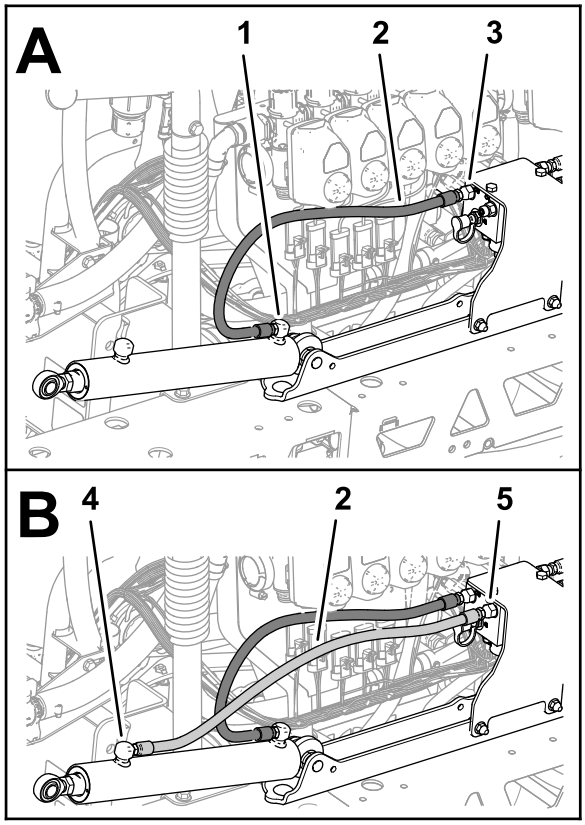


g200075

**Figure 118**

1. Extend port (left boom-lift cylinder)
2. Hydraulic hose (1/4 x 24-3/4 inches)
3. Port C3 (boom-lift manifold)
4. Retract port (left boom-lift cylinder)
5. Port C4 (boom-lift manifold)

2. Loosely assemble a new hydraulic hose (1/4 x 24-3/4 inches) between the retract port of the left boom-lift cylinder and port C4 of the boom-lift manifold (Figure 118).
3. Loosely assemble a new hydraulic hose (1/4 x 24-3/4 inches) between the extend port of the right boom-lift cylinder and port C1 of the boom-lift manifold (Figure 119).

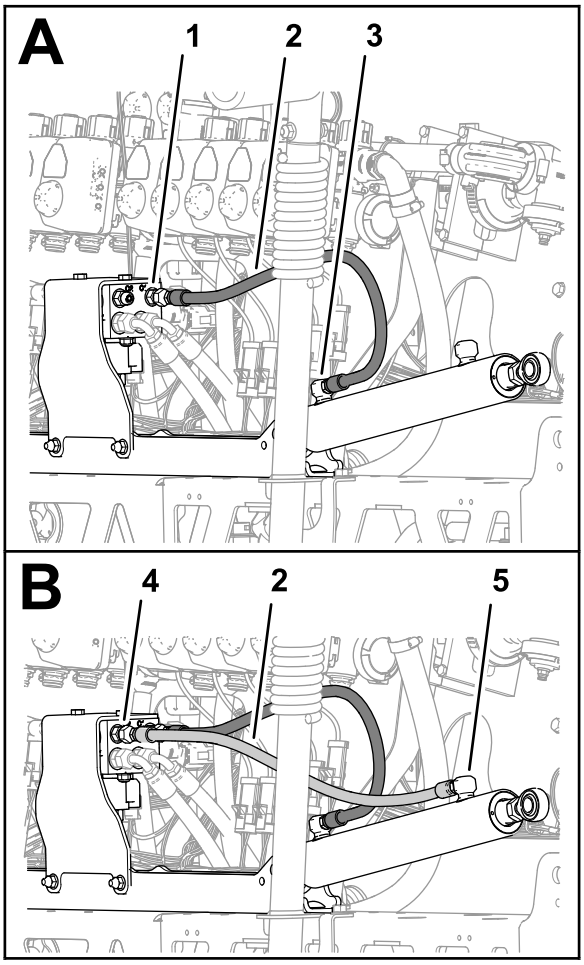


g200076

**Figure 119**

1. Port C1 (boom-lift manifold)
2. Hydraulic hose (1/4 x 24-3/4 inches)
3. Extend port (right boom-lift cylinder)
4. Port C2 (boom-lift manifold)
5. Retract port (right boom-lift cylinder)

4. Loosely assemble a new hydraulic hose (1/4 x 24-3/4 inches) between the retract port of the right boom-lift cylinder and port C2 of the boom-lift manifold (Figure 119).
5. Torque the hose fittings at the extend and retract ports of the lift cylinders (Figure 118 and Figure 119) to 21 to 26 N·m (15 to 19 ft-lb).
6. Torque the swivel nuts of the hoses at the boom-lift manifold (Figure 118 and Figure 119) to 24 to 30 N·m (17 to 22 ft-lb).

# 22

# Installing the Outer-Spray Sections

**Parts needed for this procedure:**

| | |
|---|---|
| 4 | Nylon-flange bushing |
| 1 | Cable tie |
| 1 | Supply-hose assembly 188 cm (74 inches) |
| 1 | Supply-hose assembly 234 cm (92 inches) |
| 1 | Supply-hose assembly 279 cm (110 inches) |

## Removing the Sprayer Nozzles from the Outer-Spray Sections

1. Cut the hose between 2 sprayer nozzles (Figure 120).

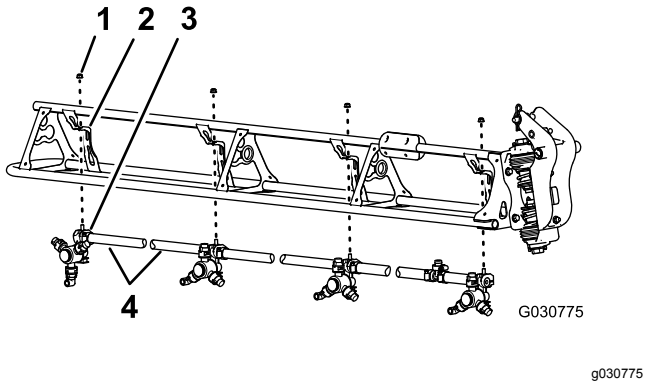


**Figure 120**

1. Flange locknut (5/16 inch)
2. Nozzle support
3. Sprayer nozzle
4. Hose (3/4 inch inside diameter)

2. Remove the flange locknut (5/16 inch) that secures the sprayer nozzle to the nozzle support (Figure 120).
3. Repeat steps 2 and 1 for the other 3 nozzles.

   **Note:** Retain the flange locknut and sprayer nozzle for installation in Installing the Sprayer Nozzles at the Outer-Spray Sections (page 62).

   **Note:** Discard the hoses, clamps and T-fitting that you removed from the machine.
4. Repeat steps 2 through 3 at the other outer-spray section.
5. Working with the 8 sprayer nozzles that you removed in step 1, remove the stainless steel screws (#12 x 1-1/4 inches) that secures the upper clamp halves and the double or single barbed-hose shanks (3/4 inch) to the body of each of the sprayer nozzle, and remove the barbed-hose shanks (Figure 121).

   **Note:** The hex-head bolt (5/16 x 3/4 inch—stainless steel) will separate from the upper clamp half when you open the clamp, retain the bolt for installation.

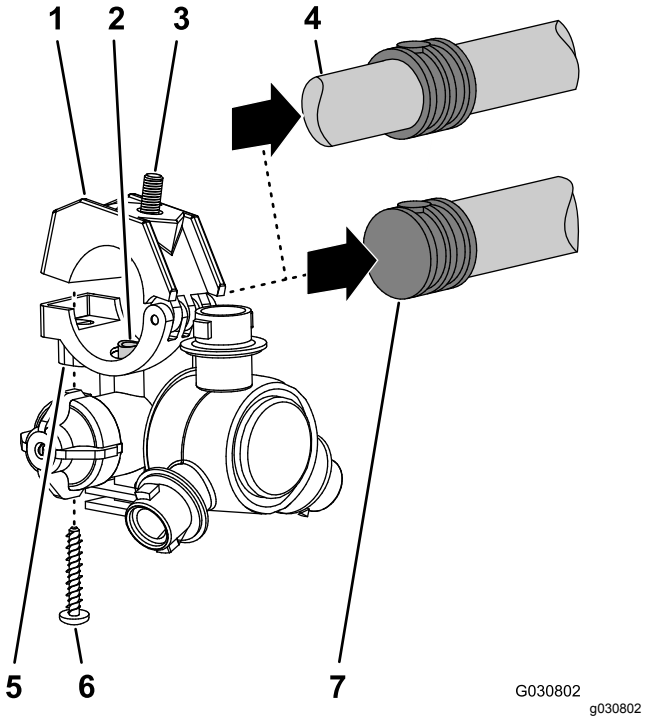


**Figure 121**

1. Upper clamp half
2. Transfer tube
3. Hex-head bolt (5/16 x 3/4 inch—stainless steel)
4. Double barbed-hose shank (3/4 inch hose)
5. Sprayer-nozzle body
6. Stainless steel screw (#12 x 1-1/4 inches)
7. Single barbed-hose shank (3/4 inch hose)

## Assembling the Outer-Spray Sections to the Machine

**Lift equipment capacity:** 91 kg (200 lb)

1. Using lift equipment with the specified capacity, raise the outer boom.
2. Insert a nylon-flange bushing into the 31.8 mm (1-1/4 inches) hole at each side of the pivot fitting (Figure 122).

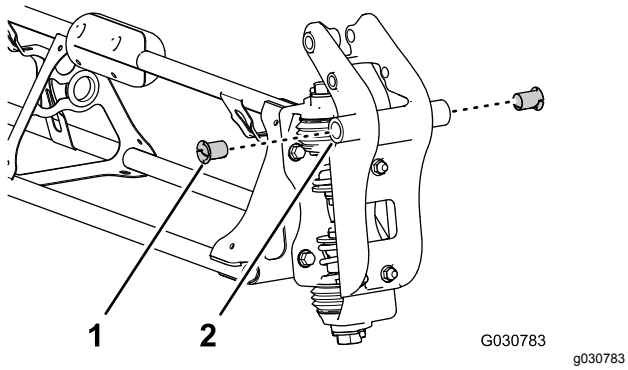


**Figure 122**

1. Nylon-flange bushing
2. Pivot fitting (outer-spray section)

3. Align the bushings in the pivot fitting with the holes in the flanges of the pivot bracket at the end of the center-spray section (Figure 123).

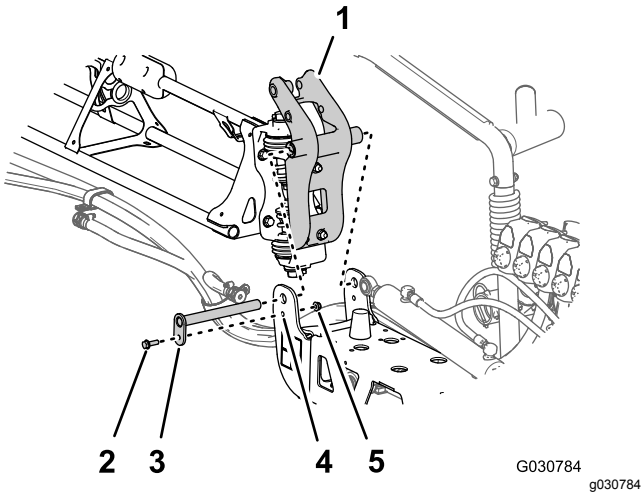


**Figure 123**

1. Pivot fitting (outer-spray section)
2. Flange bolt (5/16 x 1 inch)
3. Pivot pin
4. Pivot bracket (center-spray section)
5. Flange locknut (5/16 inch)

4. Assemble the pivot fitting to the pivot bracket with the pivot pin, flange bolt (5/16 x 1 inch), and flange locknut (5/16 inch) that you removed in step 2 of Removing the Outer-Spray Sections (page 24).
5. Torque the bolt and nut to 1978 to 2542 N·cm (175 to 225 in-lb).
6. Align the rod end of the lift cylinder with the hole 25 mm (1 inch) in the horn of the pivot fitting (Figure 124).

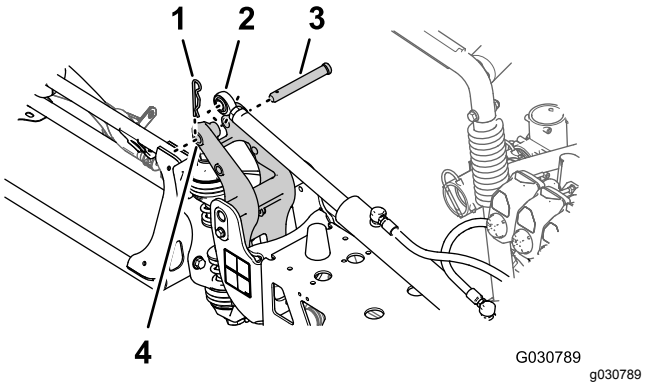


**Figure 124**

1. Hairpin
2. Rod end (lift cylinder)
3. Clevis pin
4. 25 mm (1 inch) hole—horn of the pivot-fitting

7. Secure the lift cylinder to the pivot fitting with the clevis pin and hairpin (Figure 124) that you removed in step 2 of Removing the Lift Cylinders (page 23).
8. Repeat steps 1 through 7 at the outer-spray section at the other side of the machine.

# 23

# Installing the Sprayer-Nozzle Hoses

**Parts needed for this procedure:**

| | |
|---|---|
| 2 | Supply-hose 279 cm (110 inches) |
| 2 | Supply-hose 234 cm (92 inches) |
| 4 | Supply-hose 188 cm (74 inches) |
| 2 | Supply-hose 81 cm (32 inches) |

## Identifying the Sprayer-Nozzle Hose Positions

Identify the supply hoses by length (Figure 125) for each of the sprayer-nozzle position as follows:

### Sprayer nozzle hose-position table

| Sprayer-nozzle positions—left-spray section | Sprayer-nozzle positions—center-spray section | Sprayer-nozzle positions—right-spray section |
|---|---|---|
| Sprayer nozzle 1 (nozzle valve 1)—supply hose 279 cm (110 inches) | Sprayer nozzles 5 and 6 (nozzle valve 5)—supply hose 81 cm (32 inches) with 2 branch hoses | Sprayer nozzle 9 (nozzle valve 7)—supply hose 188 cm (74 inches) |
| Sprayer nozzle 2 (nozzle valve 2)—supply hose 234 cm (92 inches) | Sprayer nozzles 7 and 8 (nozzle valve 6)—supply hose 81 cm (32 inches) with 2 branch hoses | Sprayer nozzle 10 (nozzle valve 8)—supply hose 188 cm (74 inches) |
| Sprayer nozzle 3 (nozzle valve 3)—supply hose 188 cm (74 inches) | | Sprayer nozzle 11 (nozzle valve 9)—supply hose 234 cm (92 inches) |
| Sprayer nozzle 4 (nozzle valve 4)—supply hose 188 cm (74 inches) | | Sprayer nozzle 12 (nozzle valve 10)—supply hose 279 cm (110 inches) |

**Note:** Refer to Figure 126 in Assembling the Hoses to Nozzle Valves 1 through 4 (page 60), Figure 127 in Assembling the Hoses to Nozzle Valves 5 and 6 (page 60), and Figure 128 in Assembling the Hoses to Nozzle Valves 7 through 10 (page 61) for the nozzle-valve positions.

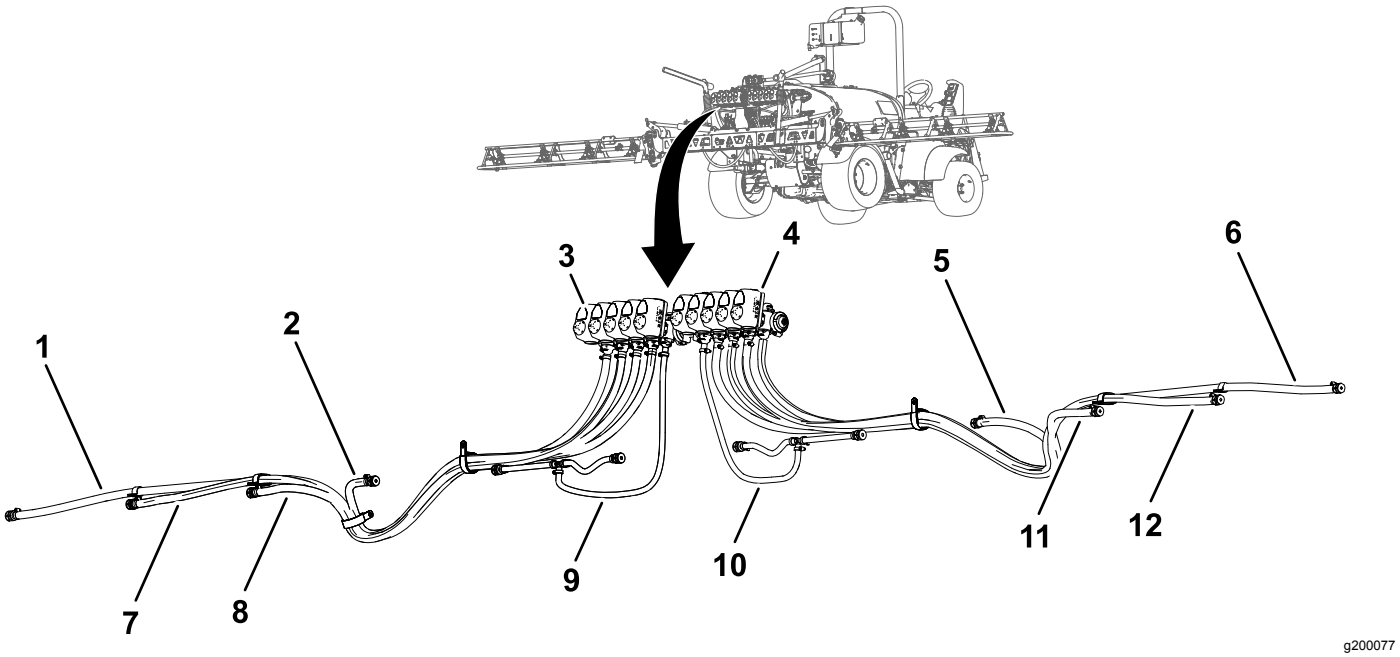


**Figure 125**

1. Supply hose 279 cm (110 inches)—sprayer nozzle 1
2. Supply hose 188 cm (74 inches)—sprayer nozzle 4
3. Nozzle valve 1
4. Nozzle valve 10
5. Supply hose 188 cm (74 inches)—sprayer nozzle 9
6. Supply hose 279 cm (110 inches)—sprayer nozzle 12
7. Supply hose 234 cm (92 inches)—sprayer nozzle 2
8. Supply hose 188 cm (74 inches)—sprayer nozzle 3
9. Supply hose 81 cm (32 inches)—sprayer nozzle 5 and 6
10. Supply hose 81 cm (32 inches)—sprayer nozzle 7 and 8
11. Supply hose 188 cm (74 inches)—sprayer nozzle 10
12. Supply hose 234 cm (92 inches)—sprayer nozzle 11

# Assembling the Hoses to Nozzle Valves 1 through 4

1. Assemble the straight barbed fitting of a supply-hose 279 cm (110 inches) onto the coupler of nozzle valve 1 (Figure 126).

   **Note:** Ensure that the barbed fitting is fully seated onto the coupler.

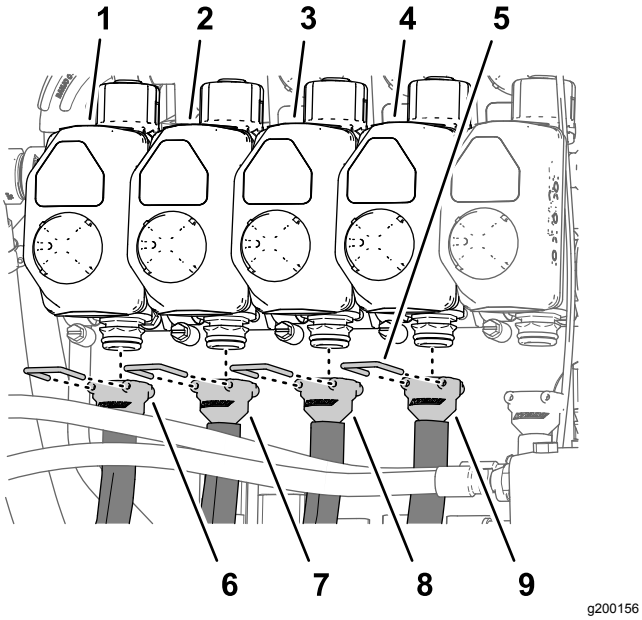


**Figure 126**

1. Nozzle valve 1
2. Nozzle valve 2
3. Nozzle valve 3
4. Nozzle valve 4
5. Retainer
6. Supply-hose 279 cm (110 inches)
7. Supply-hose 234 cm (92 inches)
8. Supply-hose 188 cm (74 inches)
9. Supply-hose 188 cm (74 inches)

2. Secure the barbed fitting to the coupler with a retainer (Figure 126).
3. Assemble the straight barbed fitting of a supply-hose 234 cm (92 inches) onto the coupler of nozzle valve 2 (Figure 126).

   **Note:** Ensure that the barbed fitting is fully seated onto the coupler.
4. Secure the barbed fitting to the coupler with a retainer (Figure 126).
5. Assemble the straight barbed fitting of a supply-hose 188 cm (74 inches) onto the coupler of nozzle valve 3 (Figure 126).

   **Note:** Ensure that the barbed fitting is fully seated onto the coupler.
6. Secure the barbed fitting to the coupler with a retainer (Figure 126).
7. Assemble the straight barbed fitting of a supply-hose 188 cm (74 inches) onto the coupler of nozzle valve 4 (Figure 126).

   **Note:** Ensure that the barbed fitting is fully seated onto the coupler.
8. Secure the barbed fitting to the coupler with a retainer (Figure 126).

# Assembling the Hoses to Nozzle Valves 5 and 6

**Note:** Supply-hose assembly 81 cm (32 inches) has a T-fitting with 2 branch hoses and 2 single barbed-hose shanks.

1. Assemble the straight barbed fitting of a supply-hose 81 cm (32 inches) onto the coupler of nozzle valve 5 (Figure 127).

   **Note:** Ensure that the barbed fitting is fully seated onto the coupler.

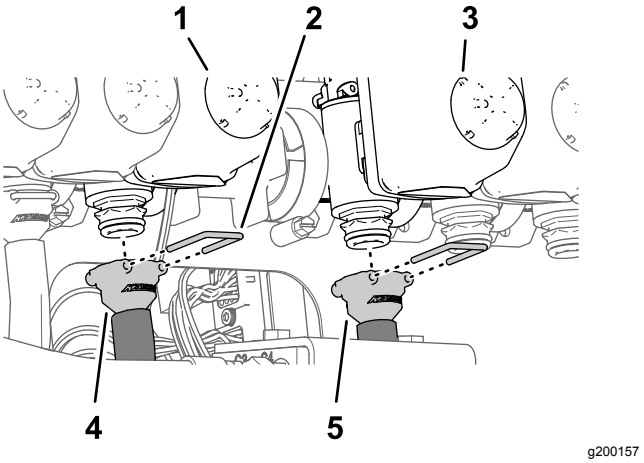


**Figure 127**

1. Nozzle valve 5
2. Retainer
3. Nozzle valve 6
4. Supply-hose 81 cm (32 inches)
5. Supply-hose 81 cm (32 inches)

2. Secure the barbed fitting to the coupler with a retainer (Figure 127).
3. Assemble the straight barbed fitting of a supply-hose 81 cm (32 inches) onto the coupler of nozzle valve 6 (Figure 127).

   **Note:** Ensure that the barbed fitting is fully seated onto the coupler.
4. Secure the barbed fitting to the coupler with a retainer (Figure 127).

# Assembling the Hoses to Nozzle Valves 7 through 10

1. Assemble the straight barbed fitting of a supply-hose 188 cm (74 inches) onto the coupler of nozzle valve 7 (Figure 128).

   **Note:** Ensure that the barbed fitting is fully seated onto the coupler.

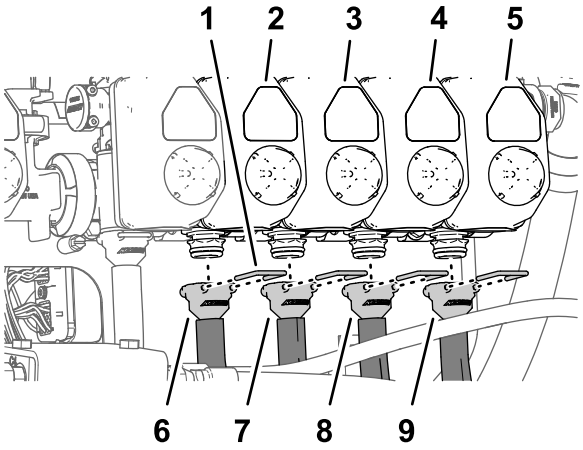


**Figure 128**

| | |
|---|---|
| 1. Retainer | 6. Supply-hose 188 cm (74 inches) |
| 2. Nozzle valve 7 | 7. Supply-hose 188 cm (74 inches) |
| 3. Nozzle valve 8 | 8. Supply-hose 234 cm (92 inches) |
| 4. Nozzle valve 9 | 9. Supply-hose 279 cm (110 inches) |
| 5. Nozzle valve 10 | |

2. Secure the barbed fitting to the coupler with a retainer (Figure 128).
3. Assemble the straight barbed fitting of a supply-hose 188 cm (74 inches) onto the coupler of nozzle valve 8 (Figure 128).

   **Note:** Ensure that the barbed fitting is fully seated onto the coupler.
4. Secure the barbed fitting to the coupler with a retainer (Figure 128).
5. Assemble the straight barbed fitting of a supply-hose 234 cm (92 inches) onto the coupler of nozzle valve 9 (Figure 128).

   **Note:** Ensure that the barbed fitting is fully seated onto the coupler.
6. Secure the barbed fitting to the coupler with a retainer (Figure 128).
7. Assemble the straight barbed fitting of a supply-hose 279 cm (110 inches) onto the coupler of nozzle valve 10 (Figure 128).

   **Note:** Ensure that the barbed fitting is fully seated onto the coupler.
8. Secure the barbed fitting to the coupler with a retainer (Figure 128).

# Routing the Supply Hoses to the Sprayer Nozzles

1. Route the hoses for sprayer nozzles 1, 2, 3, and 4 through the R-clamp at the left outboard end of the center-spray section (Figure 129 and Figure 130).

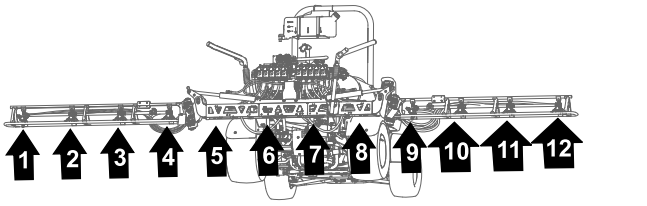


**Figure 129**

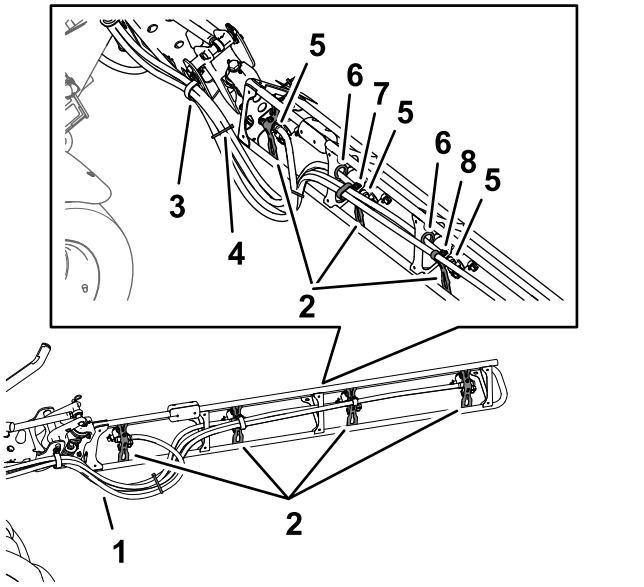


**Figure 130**

| | |
|---|---|
| 1. Hoses | 5. Single barbed-hose shank (1/2 inch) |
| 2. Nozzle supports | 6. Grommet |
| 3. R-clamp | 7. Double R-clamp |
| 4. Cable tie | 8. Single R-clamp |

2. Route the hoses for sprayer nozzles 7, 8, 9, and 10 through the R-clamp at the right outboard end of the center-spray section (Figure 129 and Figure 130).
3. Route the supply hoses 279 cm (110 inches) and barbed-hose shanks (3/4 inch) along the spray section to sprayer nozzles 1 and 10 as shown in (Figure 129 and Figure 130).

4. Route the supply hoses 234 cm (92 inches) and barbed-hose shanks (3/4 inch) along the spray section to sprayer nozzles 2 and 9 along the spray section as shown in Figure 129 and Figure 130.
5. Route the supply hoses 188 cm (74 inches) and barbed-hose shanks (3/4 inch) along the spray section to sprayer nozzles 3 and 8 as shown in Figure 129 and Figure 130.

   **Note:** Route the hoses through the lower rear grommets in the tube-frame brackets.
6. Route the supply hoses 188 cm (74 inches) and barbed-hose shanks (3/4 inch) along the spray section to sprayer nozzles 4 and 7 as shown in Figure 129 and Figure 130.

   **Note:** Route the hoses through the lower rear grommets in the tube-frame brackets.
7. Bundle the 4 hoses for the sprayer nozzles together with a cable tie as shown in Figure 130.

## Installing the Sprayer Nozzles at the Outer-Spray Sections

1. Align the transfer tube in the saddle of a sprayer nozzle (Figure 131) with the hole in the side of the single barbed-hose shank (1/2 inch).

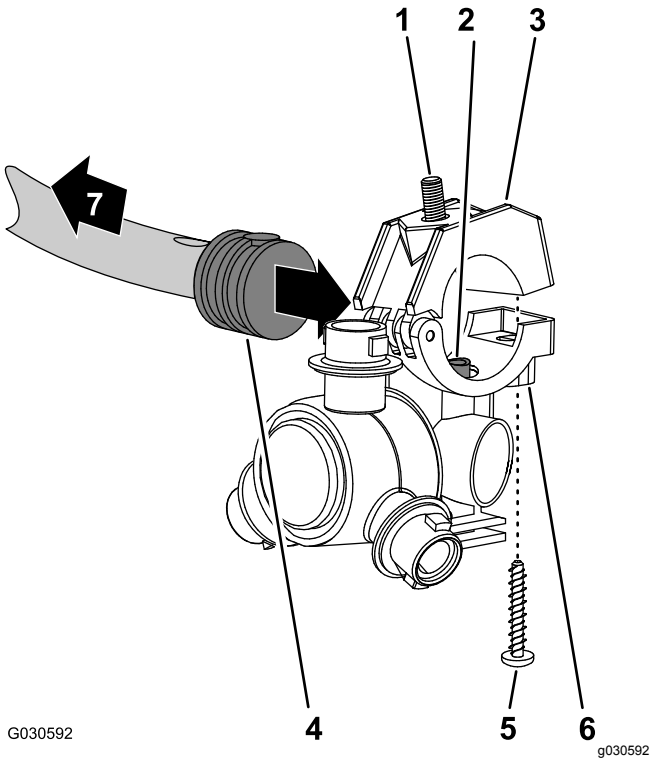


**Figure 131**

1. Hex-head bolt (5/16 x 3/4 inch—stainless steel)
2. Transfer tube
3. Upper clamp half
4. Single barbed-hose shank (1/2 inch)
5. Stainless steel screw (#12 x 1-1/4 inches)
6. Sprayer-nozzle body
7. Toward the spray section

2. Close the upper clamp half around the barbed-hose shank and secure the clamp half and spray-nozzle body (Figure 131) with the stainless steel screw (#12 x 1-1/4 inches); torque the stainless steel screw to 14 to 18 N·m (20 to 25 in-lb).

   **Note:** Ensure that the hex-head bolt (5/16 x 3/4 inch) is seated in the recess in the upper clamp half when closing the clamp.
3. Assemble the sprayer nozzles to the outer-spray section as follows:
   - At the nozzle positions 1 and 4, assemble the sprayer nozzle to the nozzle mount (A of Figure 132) with the flange locknut (5/16 inch) that you removed in step 2 of Removing the Sprayer Nozzles from the Outer-Spray Sections (page 56).
   - At the nozzle positions 2 and 3, assemble the sprayer nozzle to the nozzle mount (A and B of Figure 132) with the flange locknut (5/16 inch) that you removed in step 2 of Removing the Sprayer Nozzles from the Outer-Spray Sections (page 56).

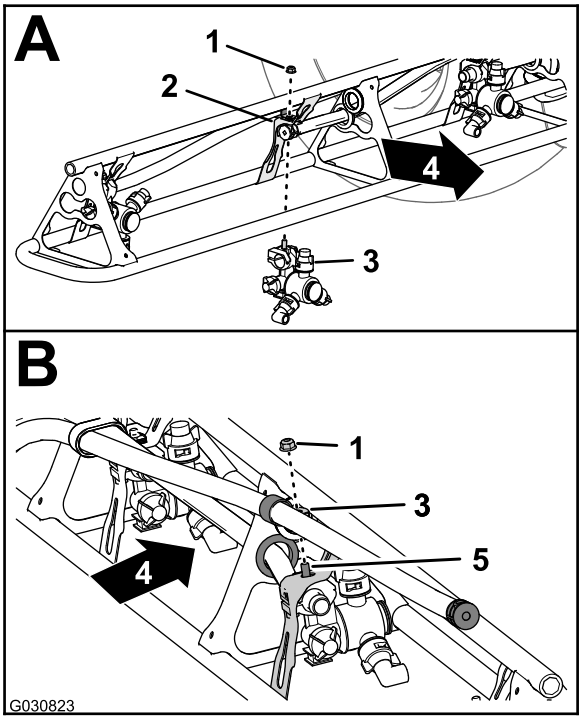


g030823

**Figure 132**

1. Flange locknut (5/16 inch)
2. Nozzle mount
3. Sprayer nozzle
4. Back of the machine
5. Hex-head bolt (stainless steel—5/16 x 3/4 inch)

4. Torque the flange locknut to 1978 to 2542 N·cm (175 to 225 in-lb).
5. Repeat steps 1 through 4 for the other sprayer nozzles for the spray section.
6. Repeat steps 1 through 5 to the outer-spray section at the other side of the machine.

# 24

# Connecting the Kit Wire Harness at the Back of the Machine

**No Parts Required**

## Connecting the Wire Harness to the Pressure Transducer and the ASC 10

1. Insert the 3-socket connector 61 cm (24 inch) branch of the kit wire harness labeled PRESSURE TRANSDUCER GREEN WEDGE into the 3-pin connector of the pressure transducer (Figure 133).

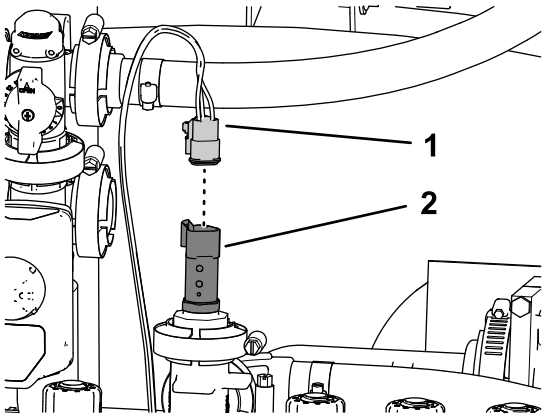


g200254

**Figure 133**

1. 3-socket connector—61 cm (24 inch) kit wire-harness branch (PRESSURE TRANSDUCER GREEN WEDGE)
2. 3-pin connector (pressure transducer)

2. Insert the 40-socket connector of the 102 cm (40 inch) branch of the kit wire harness into the 40-pin connector if the ASC 10 spray controller (Figure 134).

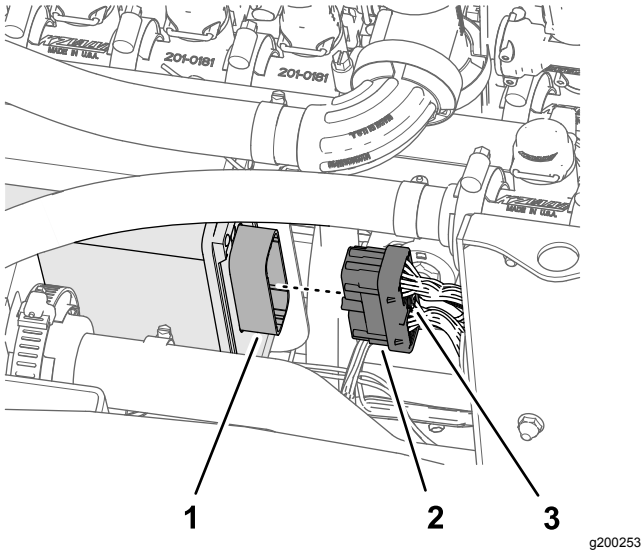


g200253

**Figure 134**

1. 40-pin connector (ASC 10 spray controller)
2. 40-socket connector (102 cm (40 inch) wire-harness branch)
3. Thumbscrew

3. Thread the thumb screw of the 40-socket connector into the ASC 10 connector by hand (Figure 134).
4. Insert the 4-socket connector labeled TO ASC 10 into the 4-pin connector of the ASC 10 spray controller (Figure 135).

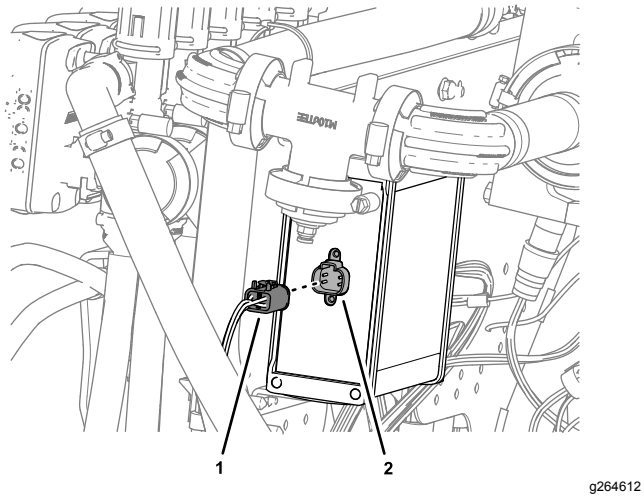


g264612

**Figure 135**

1. 4-socket connector (TO ASC 10)
2. 4-pin connector (ASC 10 spray controller)

# 25

# Connecting the Pressure-Sense Tube for the Dash Gauge

**No Parts Required**

## Connecting the Pressure-Sense Tube for the Dash Gauge

### Machines without the Optional Hand Wand Kit or the Optional Electric Hose Reel Kit

1. Align the end of the pressure-sense tube (plastic) for the pressure gauge in the dash with the locking collar for the tube coupler (Figure 136).

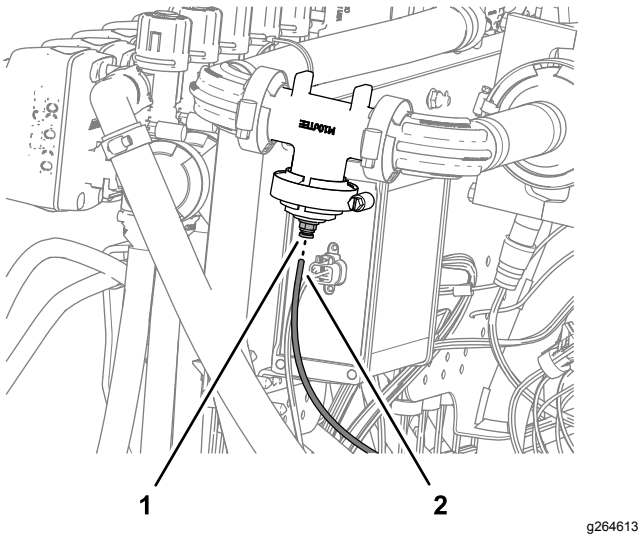


g264613

**Figure 136**

1. Locking collar (tube coupler)
2. Pressure-sense tube (dash-pressure gauge)

2. Insert the sense tube into the locking collar until the tube is fully seated (Figure 136).

## Installing the Pressure Sense-Tube

### Machines with the Optional Hand Wand Kit or the Optional Electric Hose Reel Kit

1. Remove the flange clamp the gasket that secure the plain cap to the flange of nozzle valve 10 (Figure 137).

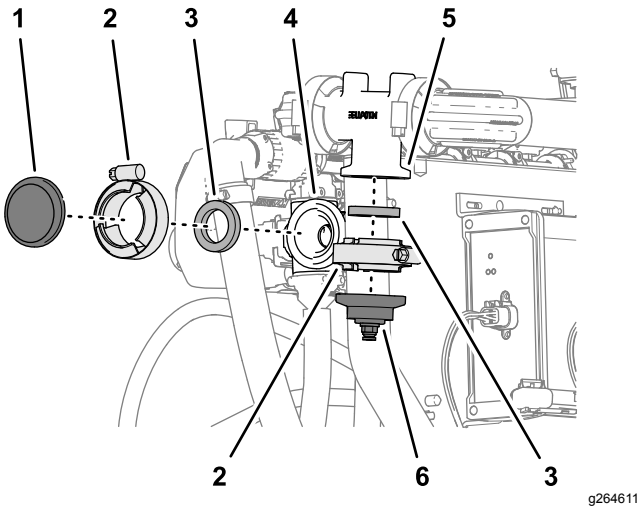


**Figure 137**

1. Cap (plain)
2. Flange clamp
3. Gasket
4. Flange (nozzle valve 10)
5. Flange (flow-meter manifold)
6. Cap and tube fitting

2. Remove the flange clamp and gasket that secure the cap and tube fitting to the flange of the flow meter manifold (Figure 137).

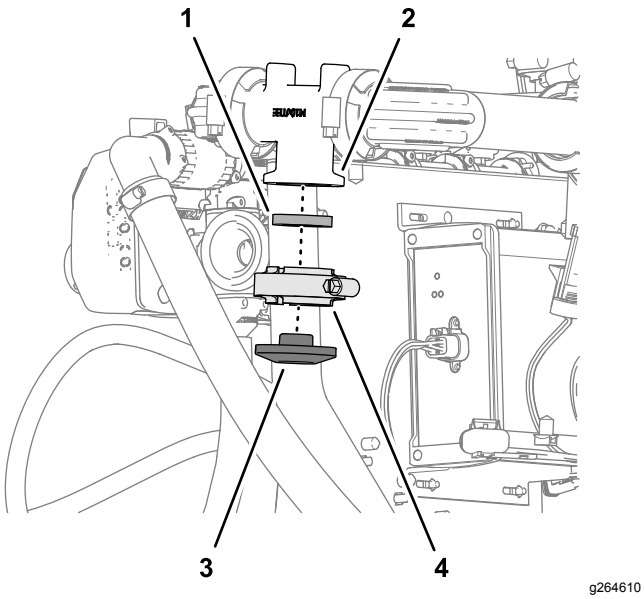


**Figure 138**

1. Gasket
2. Flange (flow meter manifold)
3. Cap (plain)
4. Flange clamp

3. Assemble the plain cap onto the flange of the flow-meter manifold with the flange clamp and gasket that you removed in step 2, and tighten the clamp by hand (Figure 138).
4. Assemble the 90° fitting of the shutoff valve for the optional spray wand kit or the electric hose reel kit onto the flange of nozzle valve 10 with the flange clamp and gasket that you removed in step 1, and tighten the clamp by hand (Figure 139).

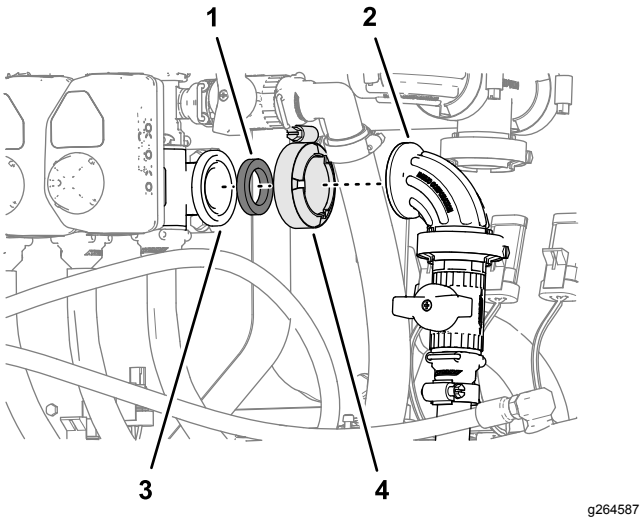


**Figure 139**

1. Gasket
2. 90° fitting (shutoff valve)
3. Flange (nozzle valve 10)
4. Flange clamp

5. Align the end of the pressure-sense tube (plastic) for the pressure gauge in the dash with the locking collar for the tube coupler in the 90° fitting of the shutoff valve of the hand spray wand or the electric hose reel kit (Figure 140).

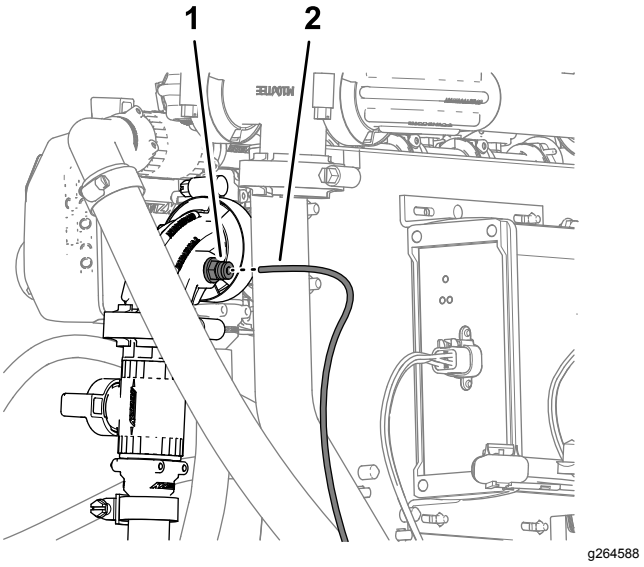


**Figure 140**

1. Tube coupler (90° fitting—shutoff valve)
2. Pressure-sense tube (dash gauge)

6. Insert the sense tube into the locking collar until the tube is fully seated (Figure 140).

# 26

# Connecting the Optional Foam-Marker Kit

**Parts needed for this procedure:**

| | |
|---|---|
| 6 | Cable tie |

## Routing the Tubing for the Foam-Marker Nozzles

1. Route the tubes for the foam nozzles at the left- and right-spray section, inboard and through the R-clamp near the pivot point for each outer-spray section (Figure 142).

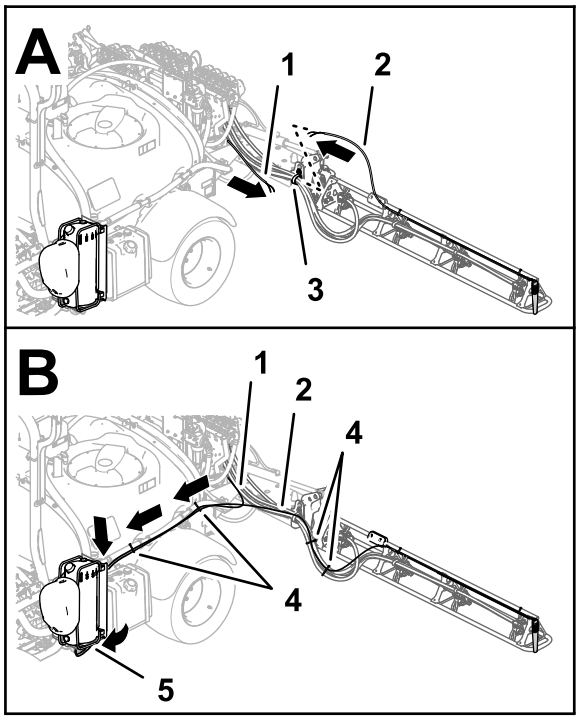


g202021

**Figure 141**

Foam Marker Kits 2016 and Before

1. Tubing—foam-marker nozzle (right-spray section)
2. Tubing—foam-marker nozzle (left-spray section)
3. R-clamp
4. Cable ties
5. Connection panel (foam-marker compressor)

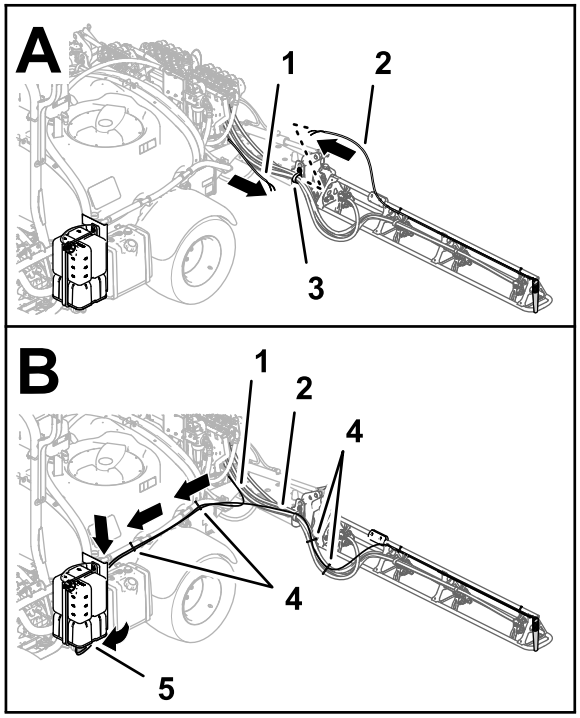


g201934

**Figure 142**

Foam Marker Kits 2017 and Later

1. Tubing—foam-marker nozzle (right-spray section)
2. Tubing—foam-marker nozzle (left-spray section)
3. R-clamp
4. Cable ties
5. Connection panel (foam-marker compressor)

2. Route the tubes forward along the left side of the sprayer tank (Figure 142).
3. Secure the tubes for the left and right foam-marker nozzles to the sprayer hoses with 4 cable ties as shown on Figure 142.
4. Secure the tubes for the left and right foam-marker nozzles to the tubes for the agitation with 2 cable ties as shown in Figure 142.

## Installing the Liquid and Air Tubes at the Compressor

### Foam Marker Kits 2017 and After

1. Route the foam tubes for the right boom as shown in Figure 143.

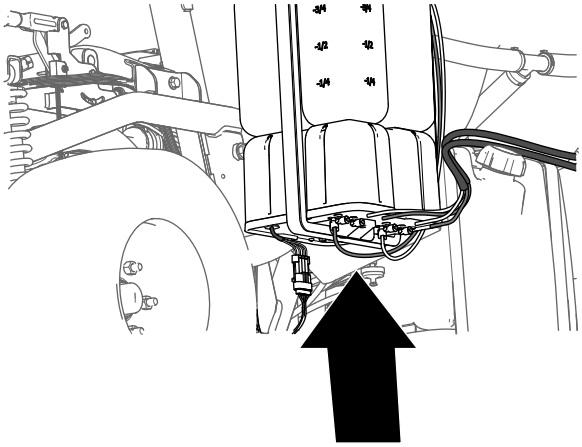


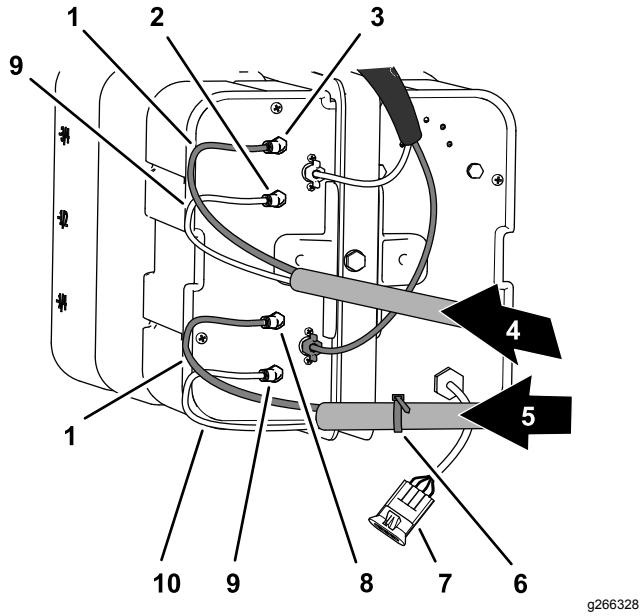


**Figure 143**

1. Blue tubes
2. Air fitting (left-spray section)
3. Liquid fitting (left-spray section)
4. Foam tubes (left-spray section)
5. Foam tubes (right-spray section)
6. Cable tie
7. Electrical connector
8. Liquid fitting (right-spray section)
9. Clear tubes
10. Air fitting (right-spray section)

2. Insert the clear tube into the air fitting at the side compressor plate (Figure 143 and Figure 144).

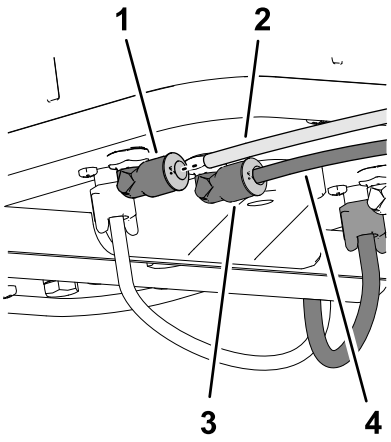


**Figure 144**

1. Air fitting
2. Clear tube
3. Liquid fitting
4. Blue tube

3. Insert the blue tube into the liquid fitting at the side compressor plate (Figure 143 and Figure 144).
4. Route the foam tubes for the left boom as shown in Figure 143.
5. Insert the clear tube into the air fitting at the side compressor plate (Figure 143 and Figure 144).
6. Insert the blue tube into the liquid fitting at the side compressor plate (Figure 143 and Figure 144).

# Installing the Liquid and Air Tubes at the Compressor

## Foam Marker Kits 2016 and Before

1. Connect the tubing with the cable tie that you prepared in step 9 of Preparing the New Tube Assemblies for the Foam-Marker Nozzles (page 15) by aligning the blue tube for the right spray section onto the compression fitting for the right-spray section water circuit (Figure 145).

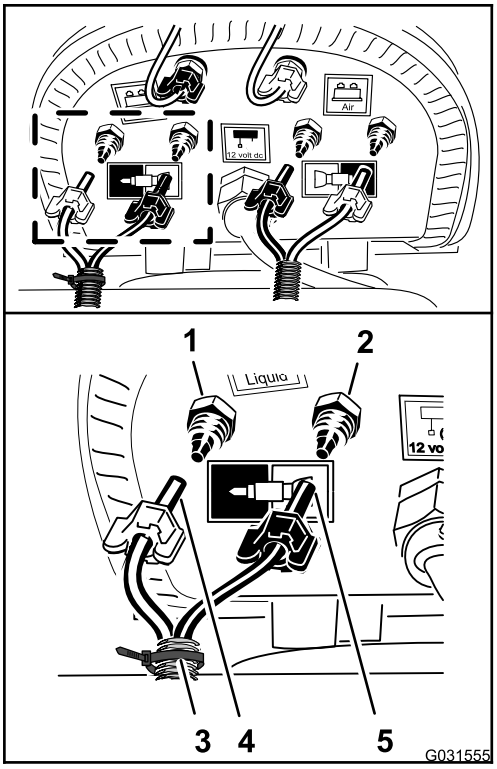


g031555

**Figure 145**

1. Compression fitting—water (right-spray section—blue tube)
2. Compression fitting—air (right-spray section—clear tube)
3. Cable tie
4. Compression nut—air (right-spray section—blue tube)
5. Compression nut—water (right-spray section—clear tube)

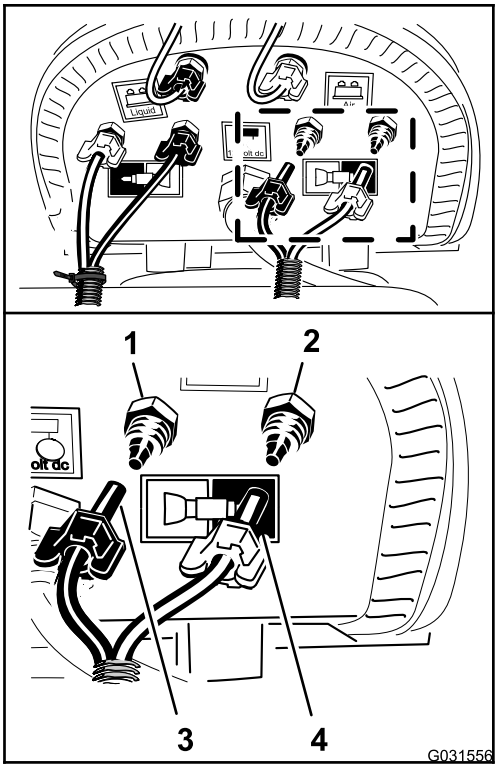


g031556

**Figure 146**

1. Compression fitting—water (left-spray section—blue tube)
2. Compression fitting—air (left-spray section—clear tube)
3. Compression nut (left-spray section—blue tube)
4. Compression nut (left-spray section—clear tube)

2. Assemble the compression nut for the tube onto the fitting and tighten the nut by hand (Figure 145).
3. Aligning the clear tube for the right-spray section onto the compression fitting for the right-spray section air circuit (Figure 145).
4. Assemble the compression nut for the tube onto the fitting and tighten the nut by hand (Figure 145).
5. Connect the unmarked (no cable tie) tubing by aligning the blue tube for the left-spray section onto the compression fitting for the left-spray section water circuit (Figure 146).
6. Assemble the compression nut for the tube onto the fitting and tighten the nut by hand (Figure 146).
7. Aligning the clear tube for the left spray section onto the compression fitting for the left-spray section air circuit (Figure 146).
8. Assemble the compression nut for the tube onto the fitting and tighten the nut by hand (Figure 146).
9. Secure the foam marker tubing to the sprayer nozzle hoses with 2 cable ties (Figure 142).

# 27

# Connecting the Optional Ultra Sonic Boom Kit

**No Parts Required**

## Procedure

1. Connect the 3-socket connector of the sonic boom wire harness to the 3-pin connector of the cable for the right ultra-sonic sensor (A of Figure 147).

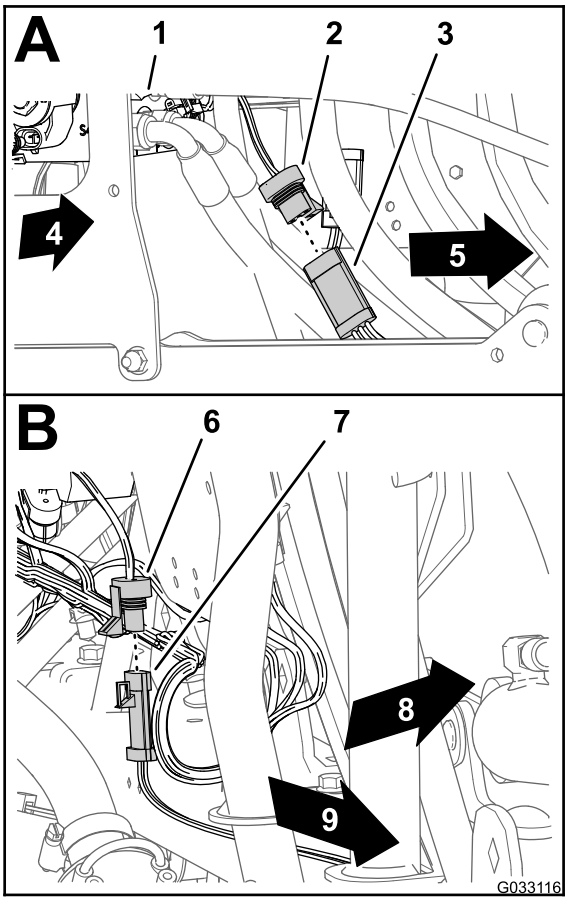


g033116

**Figure 147**

1. Lift-cylinder manifold
2. 3-socket connector (sonic boom wire harness—right sensor)
3. 3-pin connector (cable—right ultra-sonic sensor)
4. Right side of the machine
5. 3-socket connector (sonic boom wire harness—left sensor)
6. 3-pin connector (cable—left ultra-sonic sensor)
7. Left side of the machine
8. Back of the machine
9. Left side of the machine

2. Connect the 3-socket connector of the sonic boom wire harness from the 3-pin connector of the cable for the left ultra-sonic sensor (B of Figure 147).

# 28

# Assembling the Optional Covered-Boom Kit

**Parts needed for this procedure:**

| | |
|---|---|
| 1 | Cover extension assembly (12-nozzle—Toro 120-0621) |
| 22 | Pop rivet (Toro Part No. 114439) |
| 4 | Support bracket (center-section cover—Toro Part No. 131-3703-03) |
| 4 | Clip nut (Toro Part No. 94-2413) |
| 16 | Flange-head bolts (3/8 x 1-1/4 inches—Toro Part No. 110-5050) |
| 16 | Flange locknuts (3/8 inch—Toro Part No. 104-8301) |
| 2 | Cover strap (Toro Part No. 120-0629) |
| 4 | Flange-head bolts (5/16 x 1-1/4 inches—Toro Part No. 323-36) |

## Installing the Cover Extension on to the Center-Section Cover (11-Nozzle)

1. Using a drill with a 5 mm (3/16 inch) drill bit, drill the 11 pop-rivets (Figure 148) that secure the reinforcement plate (with a single row of rivets) and rubber cover to the end of the 11-nozzle section cover for the center-spray section that you removed in step 2 of 6 Removing the Center-Section Cover (11-nozzle) of the Optional Covered-Boom Kit (page 18).

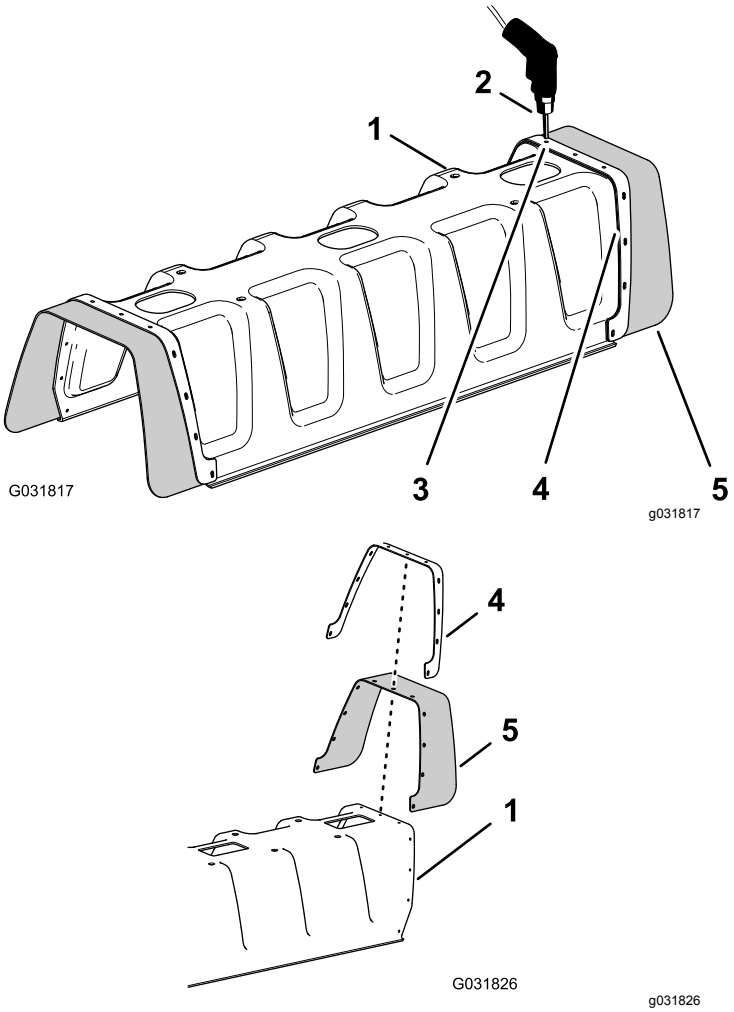


**Figure 148**

1. 11-nozzle section cover
2. Drill and 5 mm (3/16) drill bit
3. Rivet (3/16 x 1/2)
4. Reinforcement plate (single row)
5. Rubber cover

2. Remove the reinforcement plate, 11 washers (3/16 inch), and rubber cover from the 11-nozzle boom cover (Figure 148).

   **Note:** Retain the reinforcement plate, washers, and rubber cover for installation in steps 5 and 6.

3. Align the holes in the reinforcement plate (double row)on the cover extension with the holes in the end of the 11-nozzle boom cover (Figure 149).

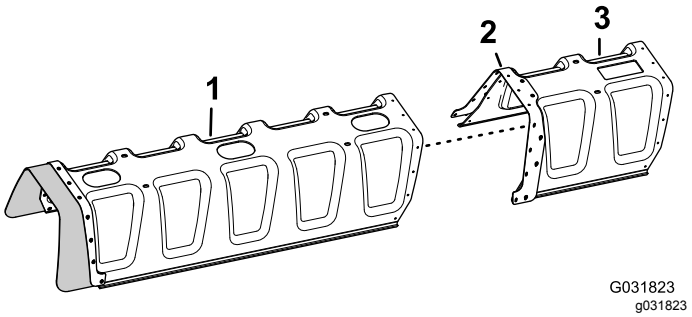


**Figure 149**

1. 11-nozzle section cover
2. Reinforcement plate (double row)
3. Cover extension

4. Secure the cover extension to the 11-nozzle section cover (Figure 150) with 11 pop rivets (Toro Part No. 114439).

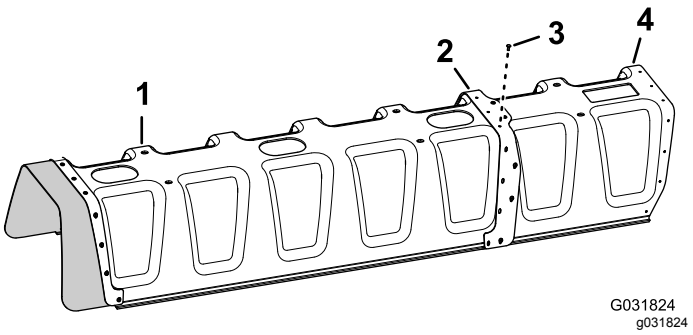


**Figure 150**

1. 11-nozzle section cover
2. Reinforcement plate (double row)
3. Pop rivets (Toro Part No. 114439)
4. Cover extension

5. Align the holes in the rubber cover and the reinforcement plate (single row) that you removed in step 2 with the holes in the end of the over extension (Figure 151).

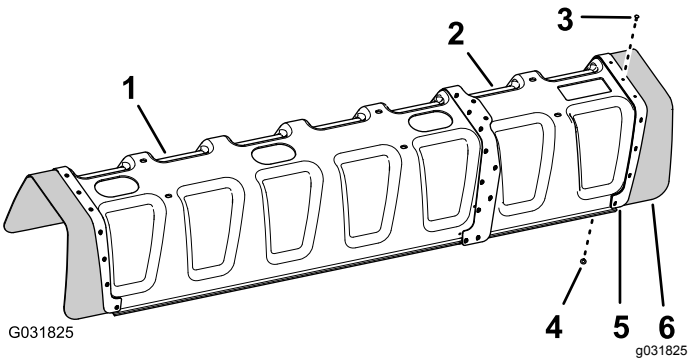


**Figure 151**

1. 11-nozzle section cover
2. Cover extension
3. Pop rivet (Toro Part No. 114439)
4. Washer (3/16 inch)
5. Reinforcement plate (single row)
6. Rubber cover

6. Secure the reinforcement plate and rubber cover to the cover extension with the 11 pop rivets (Toro Part No. 114439) and the 11 washers (3/16 inch) that you removed in step 5.

   **Note:** Align the washers (3/16 inch) against the inside surface of the cover extension.

## Installing the Support Bracket for the Center-Section Cover

1. Install the 4 clip nuts (Toro Part No. 94-2413) onto the 2 support bracket of the center-section cover (Toro Part No. 131-3703-03) as shown in (Figure 152).

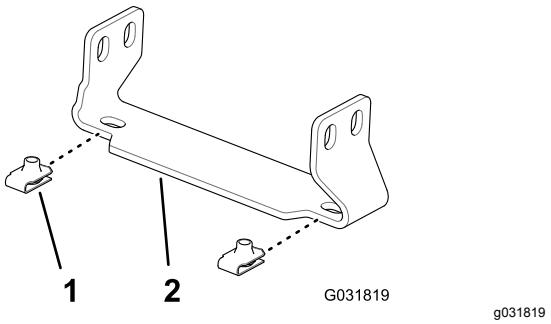


**Figure 152**

1. Clip nut (Toro Part No. 94-2413)
2. Support bracket (center-section cover—Toro Part No. 131-3703-03)

2. At the extension for the center-spray section, locate the 2 pairs of holes in the vertical face of the truss frame with a 25 mm (1 inch) hole spacing (Figure 153).

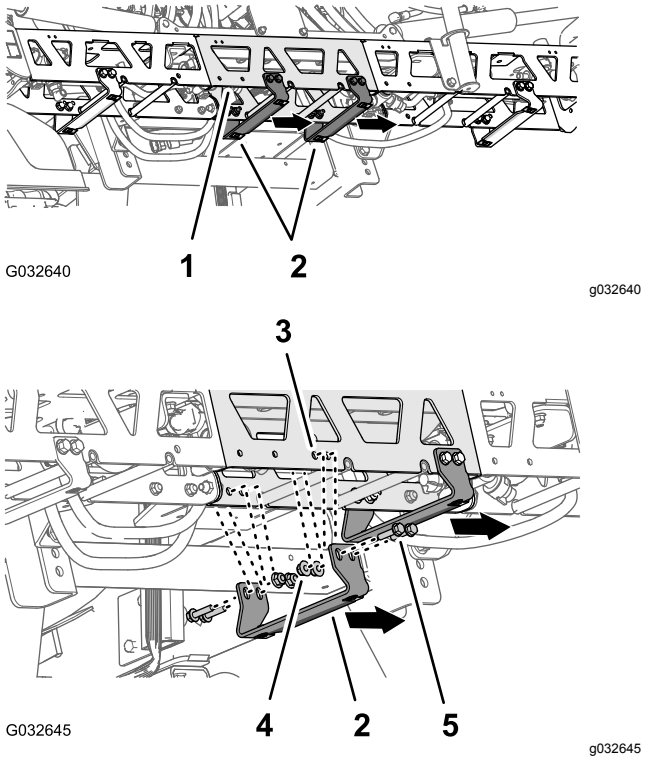


**Figure 153**

1. Extension (center-spray section_
2. Support bracket—Toro Part No. 131-3703-03 (wide flange to the right)
3. Truss-frame hole (extension for the center-spray section)
4. Flange locknuts (3/8 inch—Toro Part No. 104-8301)
5. Flange-head bolts (3/8 x 1-1/4 inches—Toro Part No. 110-5050)

3. Align the holes in a support bracket (Toro Part No. 131-3703-03) to the holes in the extension for the center-spray section that you identified in step 2 with the wide flange of the bracket to the left; refer to Figure 153.
4. Assemble the support bracket to the truss frame (Figure 153) with 4 flange-head bolts (3/8 x 1-1/4 inches—Toro Part No. 110-5050) and 4 flange locknuts (3/8 inch—Toro Part No. 104-8301).
5. Repeat steps 2 through 4 at the other 2 pairs of holes in the extension for the center-spray section and the other support bracket, flange-head bolts, and flange locknuts.
6. Torque the nuts and bolts to 37 to 45 N·m (27 to 33 ft-lb).

# Installing the Center-Section Cover

1. Align the holes in the center section cover with the holes in the support brackets for the center-section cover (Figure 154).

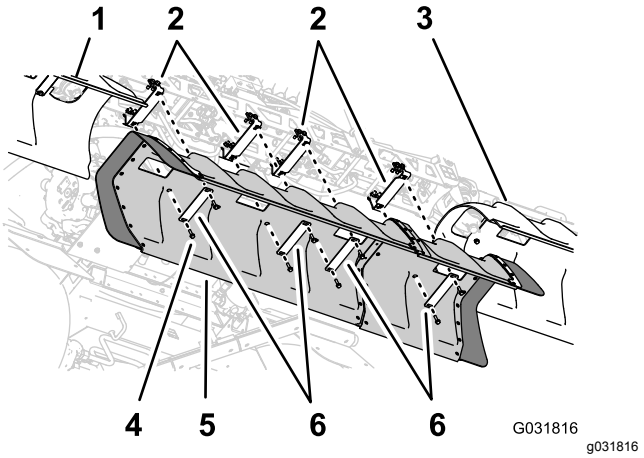


**Figure 154**

1. Left boom cover
2. Support brackets
3. Right boom cover
4. Flange-head bolts (5/16 x 1-1/4 inches)
5. Center boom cover
6. Cover straps

2. Align the holes in 2 of the cover straps that you removed in step 1 of6 Removing the Center-Section Cover (11-nozzle) of the Optional Covered-Boom Kit (page 18) with the hose in the cover and 2 of the support brackets (Figure 154).
3. Assemble the cover straps and cover to the support brackets with the 4 flange-head bolts (5/16 x 1-1/4 inches) that you removed in step 1 of 6 Removing the Center-Section Cover (11-nozzle) of the Optional Covered-Boom Kit (page 18).
4. Align the holes in the 2 cover straps (Toro Part No. 120-0629) with the 4 remaining holes in the cover and 4 remaining holes in the support brackets (Figure 154).
5. Assemble the cover straps and cover to the support brackets (Figure 154) with the 4 flange-head bolts (5/16 x 1-1/4 inches—Toro Part No. 323-36).
6. Torque the bolts to 1978 to 2542 N·cm (175 to 225 in-lb).

# 29

# Installing the Navigation Receiver

**Parts needed for this procedure:**

| | |
|---|---|
| 1 | Receiver plate |
| 1 | Spacer (3/8 x 1 inch) |
| 1 | Receiver mount |
| 1 | Bolt (3/8 x 3-1/4 inches) |
| 1 | Lock washer (3/8 inch) |
| 1 | Washer (3/8 x 13/16 inch) |
| 1 | Flange locknut (3/8 inch) |
| 1 | Flange-head bolt (5/16 x 3/4 inch) |
| 1 | Flange locknut (5/16 inch) |
| 2 | Flange-head bolt (3/8 x 1-1/2 inches) |
| 2 | Spacer (3/8 x 7/16 inch) |
| 1 | Navigation receiver—X25 GeoLink Precision Spray System Kit, Base, WAAS (Model 41630) |
| 3 | Hex-head bolt (5 x 16 mm) |
| 3 | Washer (5 mm) |
| 1 | Bulkhead adapter (optional CDMA RTK correction modem kit or GSM RTK correction modem kit) |
| 1 | Cellular antenna (optional CDMA RTK correction modem kit or GSM RTK correction modem kit) |
| 1 | Coaxial cable (optional CDMA RTK correction modem kit or GSM RTK correction modem kit) |

## Assembling the Receiver Mount

1. Align the holes in the navigation-receiver plate, spacer (3/8 x 1 inch), and receiver mount (Figure 155).

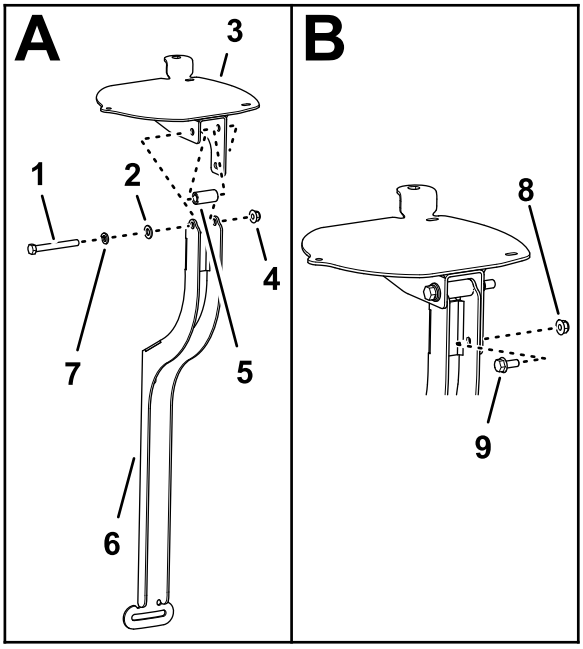


g200645

**Figure 155**

1. Bolt (3/8 x 3-1/4 inches)
2. Washer (3/8 x 13/16 inch)
3. Navigation-receiver plate
4. Flange locknut (3/8 inch)
5. Spacer (3/8 x 1 inch)
6. Receiver mount
7. Lock washer (3/8 inch)
8. Flange locknut (5/16 inch)
9. Flange-head bolt (5/16 x 3/4 inch)

2. Assemble the receiver plate and spacer to the mount with a bolt (3/8 x 3-1/4 inches), lock washer (3/8 inch), washer (3/8 x 13/16 inch), and flange locknut (3/8 inch) as shown in Figure 155.
3. Assemble the flange-head bolt (5/16 x 3/4 inch) and flange locknut (5/16 inch) through the smaller hole in the receiver mount and the slot in the receiver plate (Figure 155).
4. Tighten the bolts and nuts so that you can rotate the receiver plate with slight resistance.

# Installing the Receiver Mount to the Machine

1. Assemble the receiver mount and spacer (3/8 x 7/16 inch) to the roll bar with the flange-head bolt (3/8 x 1-1/2 inches) as shown in Figure 156.

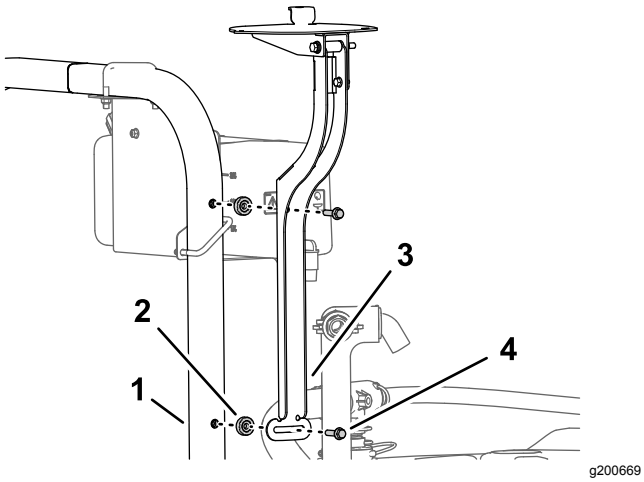


g200669

**Figure 156**

1. Roll bar (ROPS)
2. Spacer (3/8 x 7/16 inch)
3. Receiver mount
4. Flange-head bolt (3/8 x 1-1/2 inches)

2. Tighten the bolts so that you can rotate the receiver plate with slight resistance.
3. Level the receiver plate left to right (Figure 157).

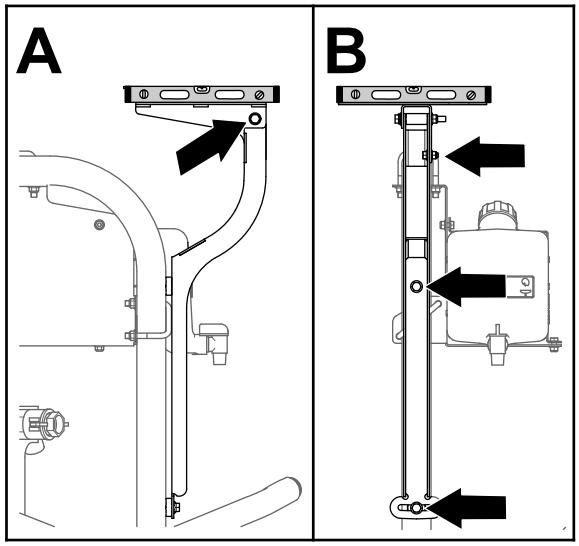


g200675

**Figure 157**

4. Torque the flange-head bolt (5/16 x 3/4 inch) and flange locknut (5/16 inch) to 1978 to 2542 N·cm (175 to 225 in-lb).
5. Level the receiver plate front to back (Figure 157).
6. Torque the bolt (3/8 x 3-1/4 inches) and flange locknut (3/8 inch) to 37 to 45 N·m (27 to 33 ft-lb).

# Assembling the Navigation Receiver to the Receiver Plate

1. Align the 3 threaded in the base of the navigation receiver to the 3 holes in the receiver mount (Figure 158).

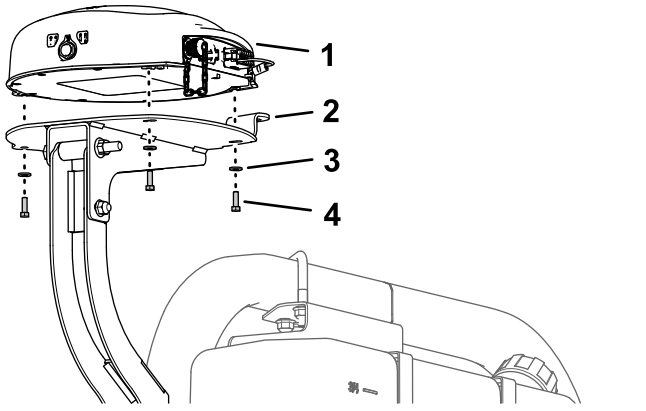


g200696

**Figure 158**

1. Navigation receiver
2. Receiver plate
3. Washer (5 mm)
4. Hex-head bolt (5 x 16 mm)

2. Assemble the receiver to the mount (Figure 158) with the 3 hex-head bolt (5 x 16 mm) and 3 washers (5 mm).
3. Torque the 3 bolts to 576 to 712 N·cm (51 to 63 in-lb).

# Installing the RTK Antenna to the Navigation Receiver

**Note:** Install the RTK antenna when your machine is equipped with a CDMA RTK or GSM RTK correction modem.

1. Align the coaxial coupler through the opening in RTK-antenna flange with the bulkhead threads of the coupler down (Figure 159).

   **Note:** Rotate the coaxial coupler as needed to align the flat of the bulkhead threads with the flat at the opening in RTK-antenna flange.

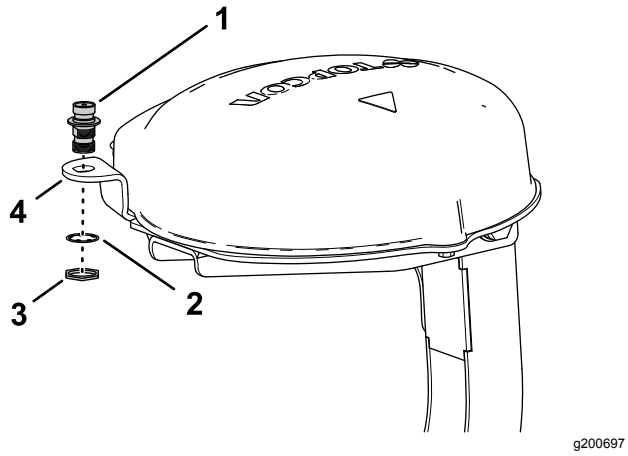


**Figure 159**

1. Coaxial coupler
2. Lock washer
3. Jam nut
4. RTK-antenna flange (receiver plate)

2. Assemble the coaxial coupler to the flange of the receiver plate with the lock washer and jam nut, and tighten the jam nut by hand (Figure 159).
3. Assemble the RTK antenna onto the upper fitting of the coaxial coupler, and tighten the knurl nut of the antenna by hand (Figure 160).

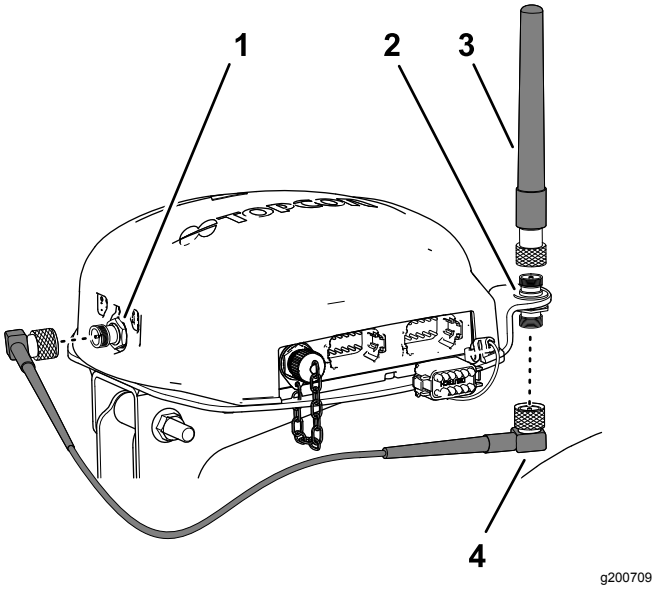


**Figure 160**

1. Coaxial connector (CDMA or GSM cellular modem)
2. Coaxial coupler
3. RTK-antenna
4. Antenna cable

4. Loosely assemble the antenna cable to the lower fitting of the coaxial coupler (Figure 160).
5. Route the cable around the back of the navigation receiver to the coaxial connector of the CDMA or GSM cellular modem (Figure 160).
6. Assemble the antenna cable to coaxial connector of the CDMA or GSM cellular modem (Figure 160).
7. Tighten the knurl nuts of the of the antenna cable by hand.

# 30

# Installing the Sprayer Monitor

**Parts needed for this procedure:**

| | |
|---|---|
| 1 | Monitor mount |
| 3 | Flange-head bolt (6 x 12 mm) |
| 2 | U-bolt (5/16 inch) |
| 8 | Flange locknut (5/16 inch) |
| 1 | Ball mount |
| 4 | Flange-head bolt (5/16 x 3/4 inch) |
| 1 | Monitor—X25 GeoLink Precision Spray System Kit, Base, WAAS (Model 41630) |
| 1 | Monitor Arm—X25 GeoLink Precision Spray System Kit, Base, WAAS (Model 41630) |

## Removing the Steering Wheel

1. Mark the position of the steering wheel to the steering valve with a piece of tape (Figure 161).

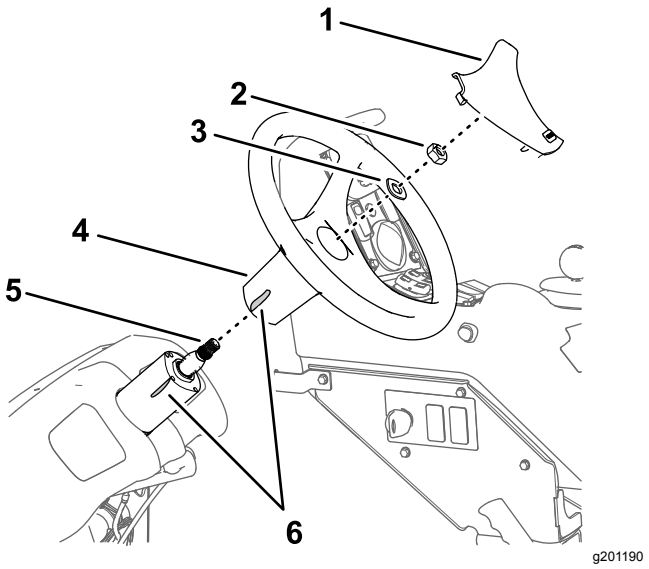


**Figure 161**

1. Steering-wheel cover
2. Nut (5/8 inch)
3. Washer (5/8 inch)
4. Steering wheel
5. Shaft (steering valve)
6. Tape

2. Remove the cover from the steering wheel (Figure 161).
3. Remove the nut (5/8 inch) and washer (5/8 inch) that secure the steering wheel to the steering valve, and remove the steering wheel (Figure 161).

## Installing the Monitor Mount

1. Align the monitor mount to the machine as shown in Figure 162.

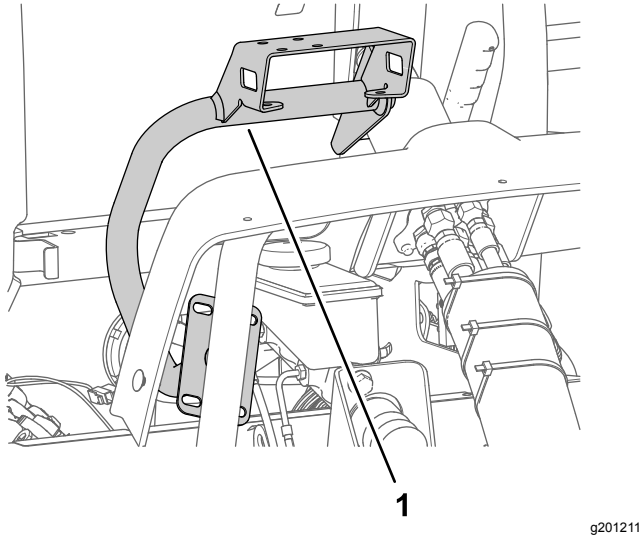


**Figure 162**

1. Monitor mount

2. Assemble the monitor mount to the housing of the steering valve (Figure 163) with the 3 flange-head bolts (6 x 12 mm).

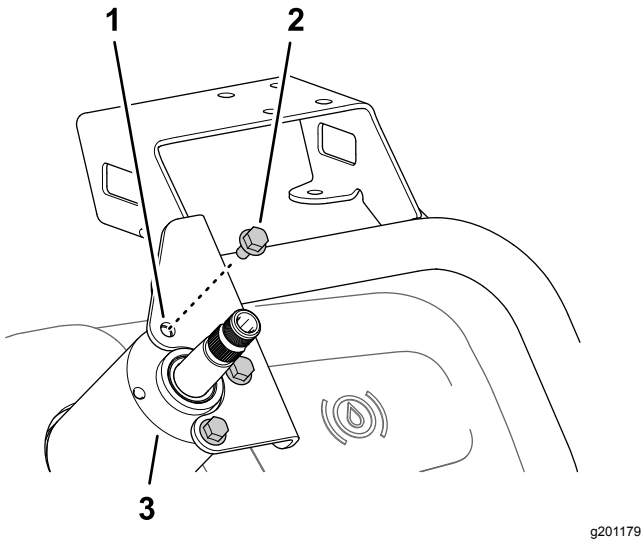


**Figure 163**

1. Monitor mount
2. Flange-head bolt (6 x 12 mm)
3. Housing (steering valve)

3. Assemble the plate of the monitor mount to the support tube of the machine chassis (Figure 164) with the 2 U-bolts and 4 flange locknuts (5/16 inch).

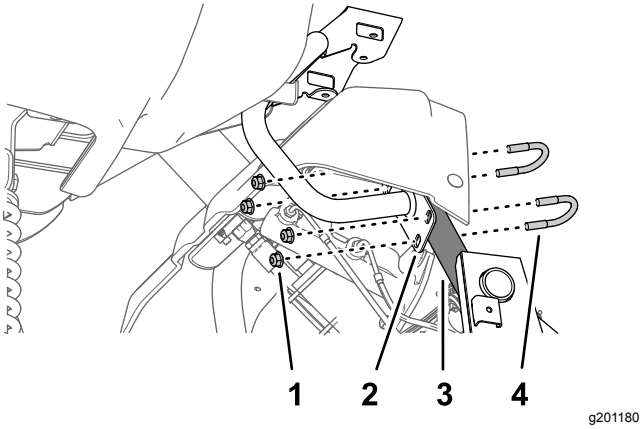


**Figure 164**

1. Flange locknut (5/16 inch)
2. Plate (monitor mount)
3. Support tube (machine chassis)
4. U-bolt (5/16 inch)

4. Torque the 3 flange-head bolts (6 x 12 mm) at the steering valve to 972 to 1198 N·cm (86 to 106 in-lb); At the support tube, torque the flange locknuts to 1978 to 2542 N·cm (175 to 225 in-lb).

## Installing the Steering Wheel

1. Align the tape mark on the steering wheel to the tale mark on the housing of the steering valve (Figure 165).

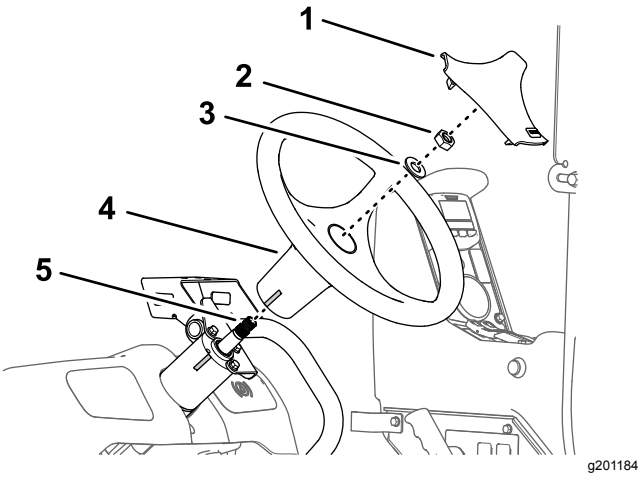


**Figure 165**

1. Steering-wheel cover
2. Nut (5/8 inch)
3. Washer (5/8 inch)
4. Steering wheel
5. Shaft (steering valve)

2. Assemble the steering wheel onto the shaft of the steering valve (Figure 165) with the washer (5/8 inch) and nut (5/8 inch) that you removed in

step 3 of Removing the Steering Wheel (page 75).

3. Torque the nut to 206 to 254 N·m (152 to 188 ft-lb).
4. Install the cover that you removed in step 2 of Removing the Steering Wheel (page 75) onto the steering wheel (Figure 171).

## Installing the Sprayer Monitor to the Mount

1. Assemble the ball mount to the bracket for the monitor mount (Figure 166) with the 4 flange-head bolt (5/16 x 3/4 inch) and 4 flange locknut (5/16 inch).

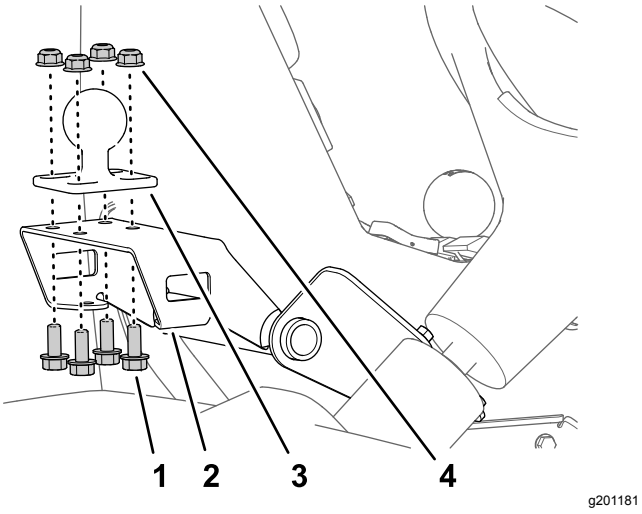


**Figure 166**

1. Bracket (monitor mount)
2. Flange-head bolt (5/16 x 3/4 inch)
3. Ball mount
4. Flange locknut (5/16 inch)

2. Torque the bolts and nuts to 1978 to 2542 N·cm (175 to 225 in-lb).
3. Assemble the ball fitting of the monitor and the ball mount on the machine to the monitor arm (Figure 167).

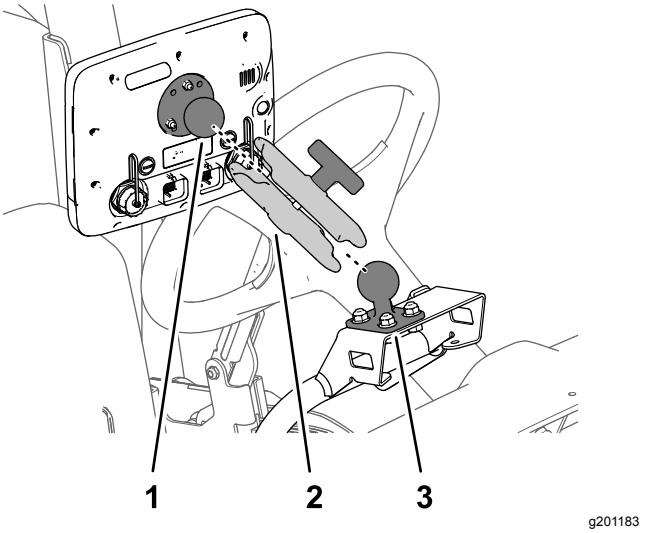


**Figure 167**

1. Ball fitting (monitor)
2. Monitor arm
3. Ball mount

4. Adjust the monitor so that it is viewable from the machine operator's position and tighten the knob of the monitor arm by hand (Figure 167).

# 31

# Wiring the Spray Pump Clutch

**No Parts Required**

## Procedure

1. Disconnect the 2-socket connector of the machine wire harness labeled SPRAY PUMP COIL from the 2-pin connector of the alternator (Figure 168).

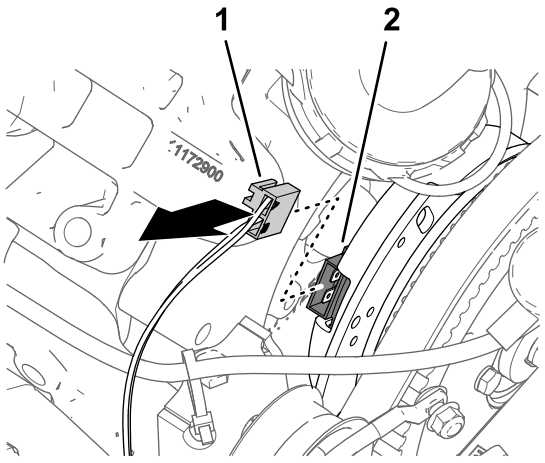


g198155

**Figure 168**

1. 2-socket connector—machine wire-harness (PUMP CLUTCH)
2. 2-pin connector (alternator)

2. Connect the 2-pin connector of the kit wire-harness branch—84 cm (33 inches) labeled PUMP CLUTCH into the 2-socket connector of the machine wire-harness labeled SPRAY PUMP COIL (Figure 169).

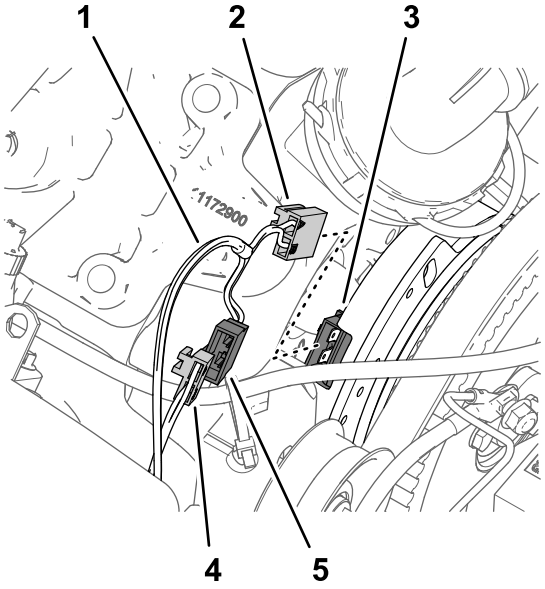


g198144

**Figure 169**

1. Kit wire-harness branch—84 cm (33 inches)
2. 2-socket connector—kit wire-harness (PUMP CLUTCH)
3. 2-pin connector (alternator)
4. 2-socket connector—machine wire-harness (SPRAY PUMP COIL)
5. 2-pin connector—kit wire-harness (PUMP CLUTCH)

3. Connect the 2-socket connector of the kit wire-harness labeled PUMP CLUTCH into the 2-pin connector of the alternator (Figure 169).
4. Route the wire-harness branch—84 cm (33 inches) against the engine and spray pump so that the harness has clearance from the alternator belt (Figure 170).

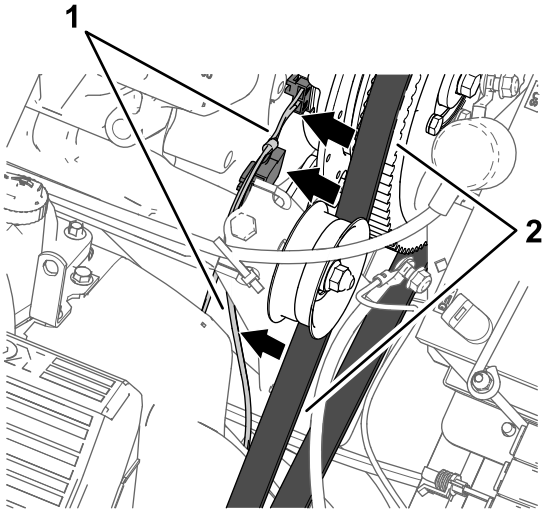


g198156

**Figure 170**

1. Wire-harness branch—84 cm (33 inches)
2. Alternator belt

# 32

# Installing Components for the Sprayer Electrical System

**Parts needed for this procedure:**

| | |
|---|---|
| 1 | Battery bracket |
| 1 | Bolt (5/16 x 1-3/4 inches) |
| 1 | Washer (5/16 inch) |
| 1 | Battery (540 A) |
| 1 | Battery retainer |
| 1 | Flange locknut (5/16 inch) |
| 1 | Alternator bracket |
| 1 | Drive pulley 279 mm (11 inch) |
| 4 | Bolt (1/4 x 2-1/4 inches) |
| 4 | Lock washer (1/4 inch) |
| 1 | Alternator (60 A) |
| 1 | Flange-head bolt (8 x 25 mm) |
| 1 | Flange-head bolt (3/8 x 1-1/2 inches) |
| 1 | V-belt |

## Removing the Battery (300 A) and Battery Bracket

1. Remove the 2 flange locknuts and hold-down rod from the 2 J-bolts that secure the battery to the battery bracket of the machine (Figure 171).

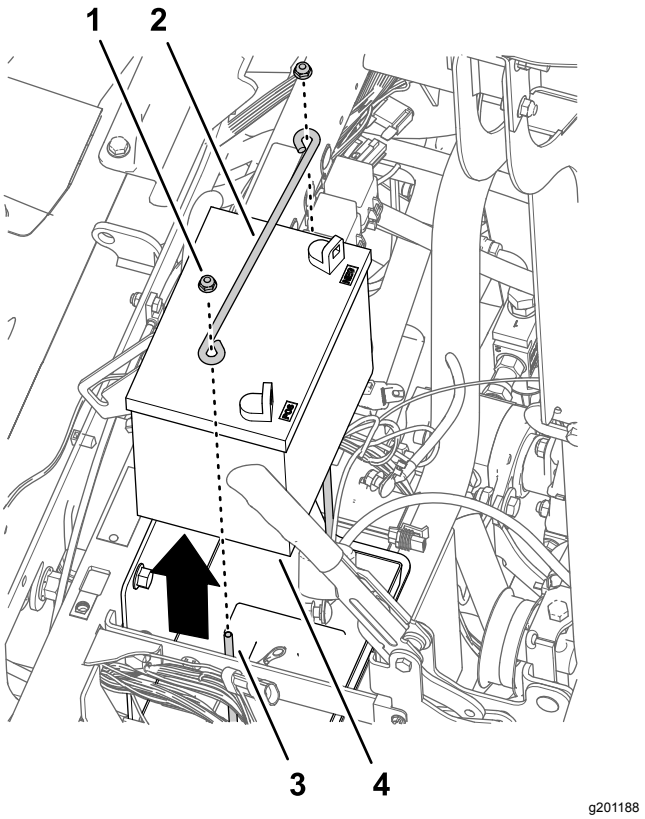


**Figure 171**

1. Flange locknut (1/4 inch)
2. Hold-down rod
3. J-bolt
4. Battery (300 A)

2. Remove the battery from the machine (Figure 171).

   **Note:** You no longer need the flange nuts, hold-down rod, and battery (300 A).

3. Remove the bolts (10-24 x 3/4 inch) and nuts (10-24) that secure the fuse blocks to the battery bracket (Figure 172).

   **Note:** Retain the bolts (10-24 x 3/4 inch) and nuts (10-24) for installation in Installing the Battery Bracket and Battery (540 A) (page 81).

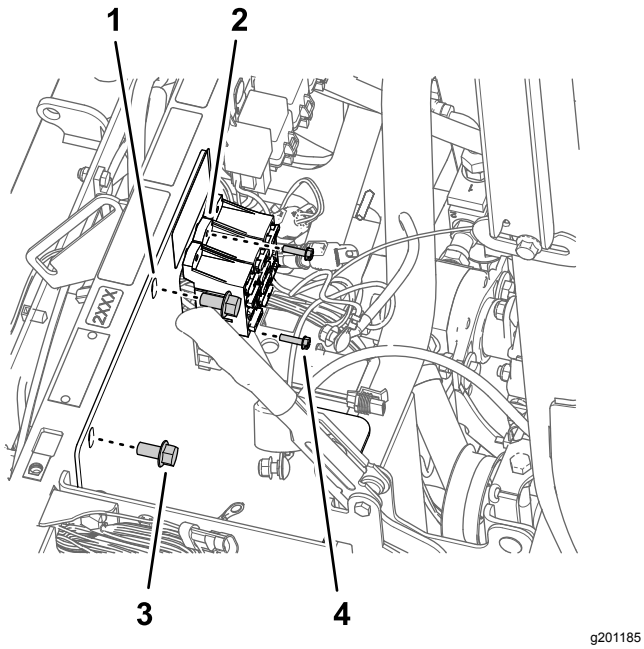


**Figure 172**

1. Bold-down rod
2. Fuse block
3. Flange-head bolt (3/8 x 3/4 inch)
4. Bolt (10-24 x 3/4 inch)

4. Remove the 2 flange-head bolts (3/8 x 3/4 inch) that battery bracket to the shock-support tube of the machine (Figure 172).

   **Note:** Retain the flange-head bolt (3/8 x 3/4 inch) for installation in Installing the Battery Bracket and Battery (540 A) (page 81).

5. Remove the 2 J-bolts and battery tray from the battery bracket (Figure 173).

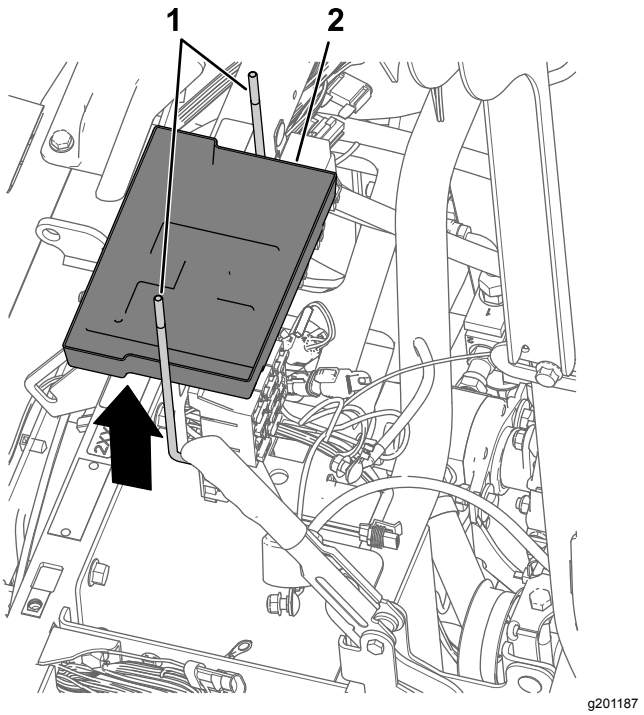


**Figure 173**

1. J-bolt
2. Battery tray

6. Remove the battery bracket from the machine (Figure 174).

   **Note:** You no longer need the J-bolts, battery tray, and battery bracket.

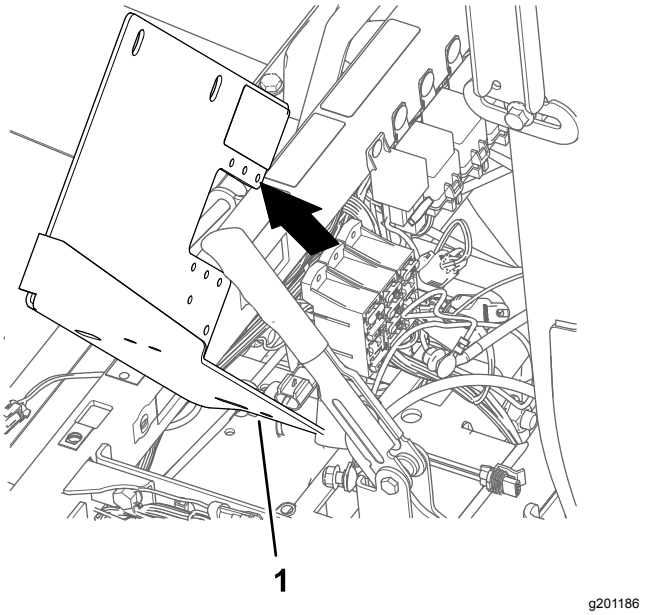


**Figure 174**

1. Battery bracket

# Installing the Battery Bracket and Battery (540 A)

1. Align the new battery bracket to the shock-support tube of the machine and the fuse blocks (Figure 175).

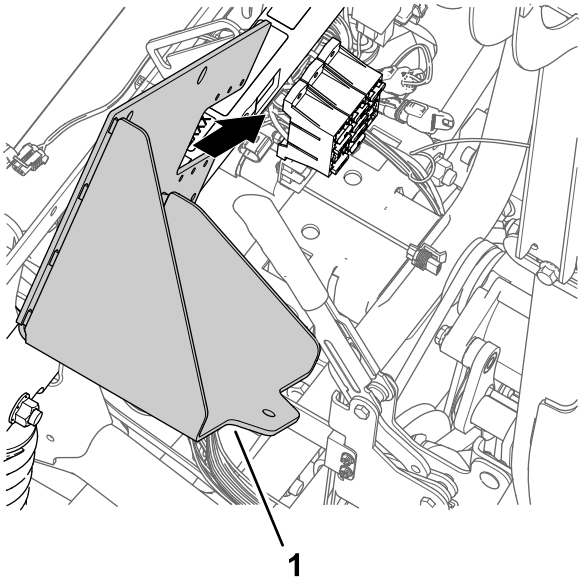


g201177

**Figure 175**

1. Battery bracket

2. Assemble the battery bracket to the shock-support tube (Figure 176) with the 2 flange-head bolt (3/8 x 3/4 inch) that you retainer in step 4 of Removing the Battery (300 A) and Battery Bracket (page 79).

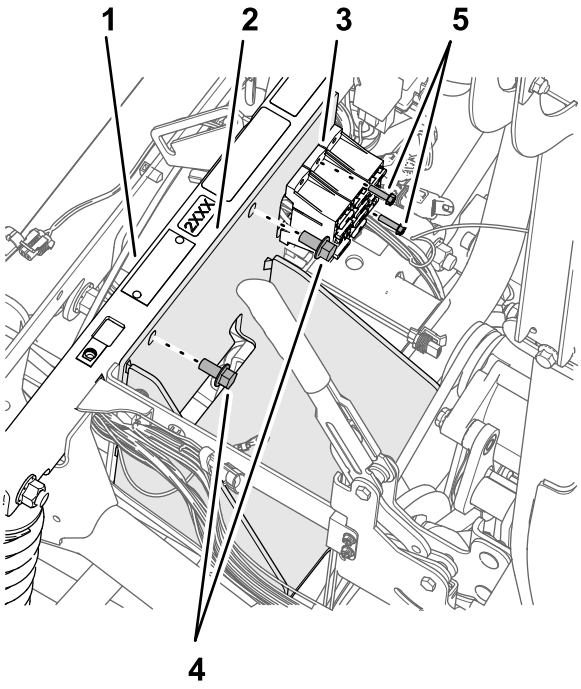


g201178

**Figure 176**

1. Shock-support tube
2. Battery bracket
3. Fuse block
4. Bolt (10-24 x 3/4 inch)
5. Flange-head bolt (3/8 x 3/4 inch)

3. Torque the flange head bolts to 37 to 45 N·m (27 to 33 ft-lb).
4. Secure the fuse blocks to the battery bracket (Figure 176) with the bolt (10–24 x 3/4 inch) and nuts (10-24) that you removed in step 3 of Removing the Battery (300 A) and Battery Bracket (page 79).
5. Assemble the battery to the battery bracket with the bolt (5/16 x 1-3/4 inches), washer (5/16 inch), battery retainer, and flange locknut (5/16 inch) as shown in Figure 177.

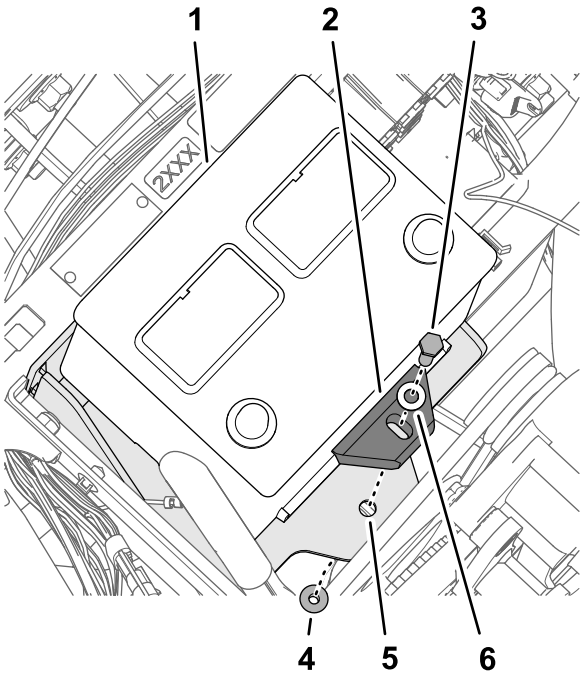


g201182

**Figure 177**

1. Battery (540 A)
2. Battery retainer
3. Bolt (5/16 x 1-3/4 inches)
4. Flange locknut (5/16 inch)
5. Battery bracket
6. Washer (5/16 inch)

6. Torque the bolt and nut to 1978 to 2542 N·cm (175 to 225 in-lb).

## Installing the Alternator Bracket

1. At the pump head located at 11 o'clock position, loosen the 2 bolts as shown Figure 178 to provide a 7 to 10 mm (1/4 to 3/8 inch) gap between the head of the bolts and the pump.

   **Note:** You do not need to remove the bolts from the spray pump.

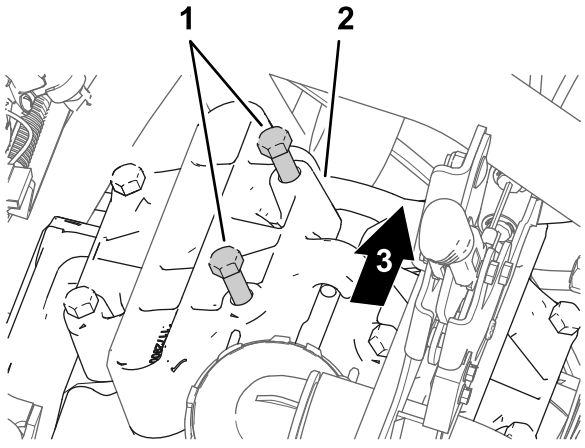


g201308

**Figure 178**

1. Bolts (pump head)
2. Pump head (11 o'clock position)
3. Back of the machine

2. Align the alternator bracket between the bolts that you loosened and as shown in step 1 and the pump head Figure 179.

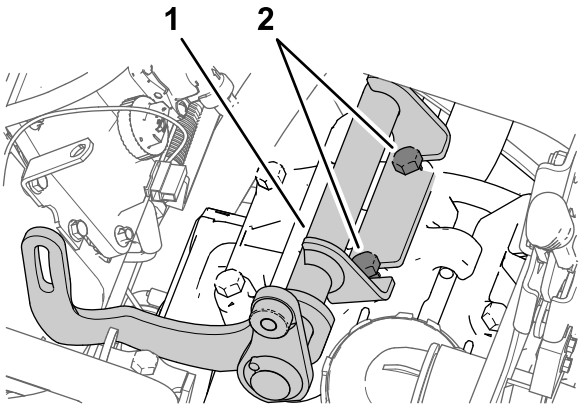


g201303

**Figure 179**

1. Alternator bracket
2. Bolts (pump head)

3. Torque the bolts to 61 to 75 N (45 to 55 ft-lb).

## Installing the Drive Pulley

1. Loosen the nut for the idler-pulley shaft (Figure 180).

   **Note:** Ensure that there is no belt tension.

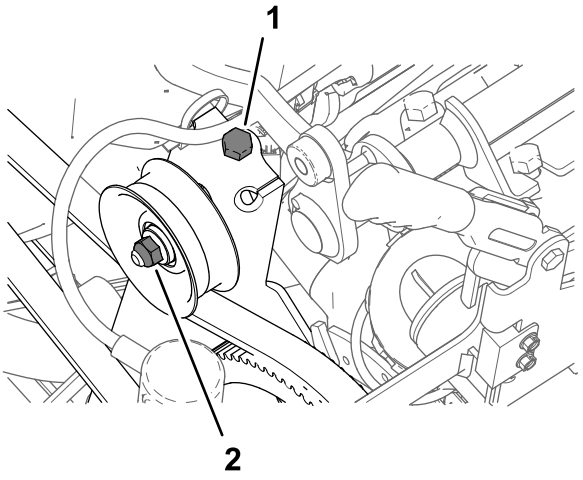


g201304

**Figure 180**

1. Belt-tension bolt (machine)
2. Nut (idler-pulley shaft)

2. Rotate the belt-tension bolt to remove all tension from the sprayer-pump belt (Figure 180).
3. Remove the 4 bolts (1/4 x 1 inch) and 4 lock washers (1/4 inch) that secure the pulley to the sprayer pump (Figure 181).

   ***Important:*** **Do not remove the pulley.**

   **Note:** You no longer need the bolts and lock washers.

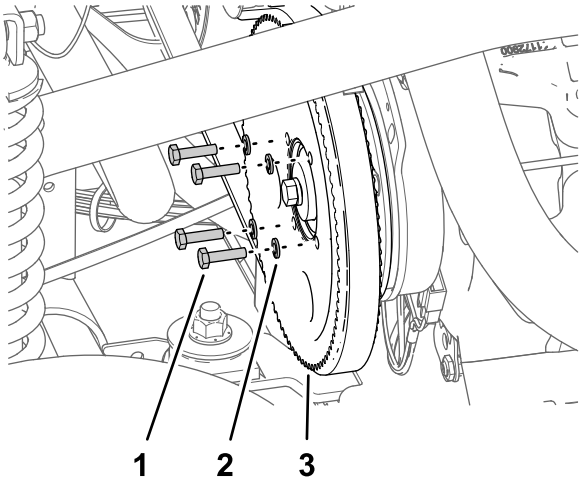


g201306

**Figure 181**

1. Bolt (1/4 x 1 inch)
2. Lock washer (1/4 inch)
3. Pulley (sprayer pump)

4. Align the holes in the pulley for the alternator (kit) with the holes in the pulley for the sprayer pump (Figure 182).

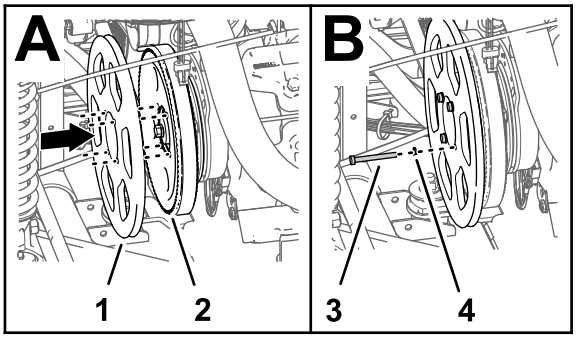


g201305

**Figure 182**

1. Drive pulley 279 mm (11 inch)
2. Pulley (sprayer pump)
3. Bolt (1/4 x 2-1/4 inches)
4. Lock washer (1/4 inch)

5. Assemble the alternator pulley to the sprayer-pump pulley and sprayer pump with the 4 bolt (1/4 x 2-1/4 inches) and 4 lock washers (1/4 inch).
6. Torque the bolts to 1017 to 1243 N·m (90 to 110 in-lb).
7. Rotate the belt-tension bolt to increase the tension of the belt until you measure belt 9.5 mm (3/8 inch) of belt deflection when you apply 4.5 kg (10 lb) halfway between the engine and spray pump sprockets.

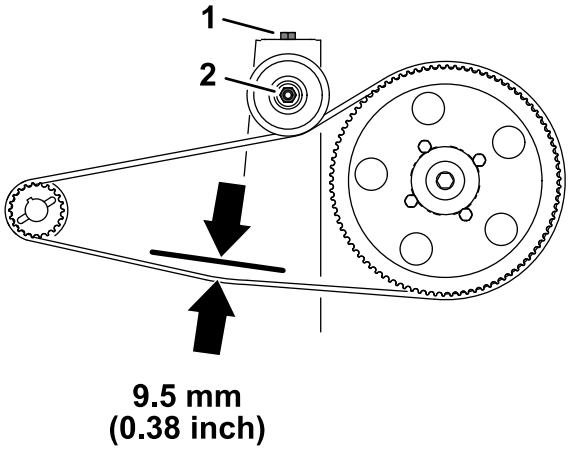


g201360

**Figure 183**

1. Belt-tension bolt (machine)
2. Nut (idler-pulley shaft)

8. Tighten the nut for the idler-pulley shaft to 37 to 44 N·m (27 to 33 ft-lb).

## Installing the Alternator

1. Assemble the alternator (60 A) to the threaded boss of the alternator-bracket (Figure 184) with the flange-head bolt (3/8 x 1-1/2 inches).

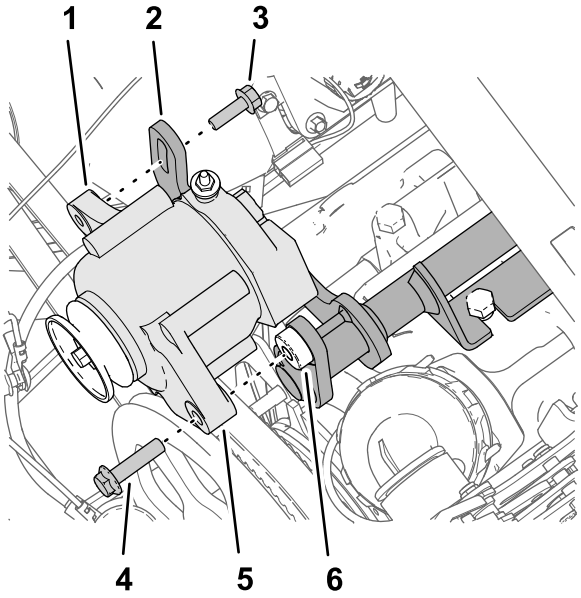


g201413

**Figure 184**

1. Threaded flange (8 mm)—alternator (60 A)
2. Slotted flange (alternator bracket)
3. Flange-head bolt (8 x 25 mm)
4. Flange-head bolt (3/8 x 1-1/2 inches)
5. Flange (10 mm (3/8 inch) hole)—alternator (60 A)
6. Threaded boss (3/8-16)—alternator-bracket

2. Assemble the threaded flange of the alternator to the slotted flange of the alternator bracket

(Figure 184) with the flange-head bolt (8 x 25 mm).

3. Assemble the V-belt over the drive pulley 279 mm (11 inch) and the pulley of the alternator (Figure 185).

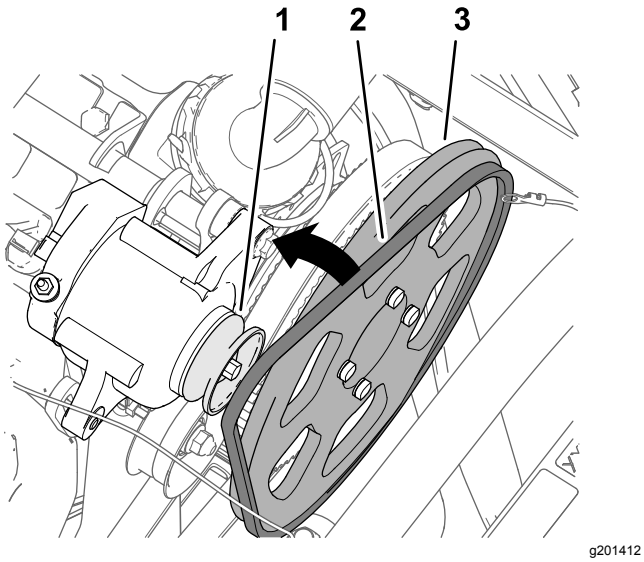


**Figure 185**

1. Pulley (Alternator—60 A)
2. V-belt
3. Drive pulley 279 mm (11 inch)

4. Rotate the alternator (Figure 186) up to increase tension on the belt until you measure belt 9.5 mm (3/8 inch) of belt deflection when you apply 4.5 kg (10 lb) halfway between the alternator pulley and drive pulley 279 mm (11 inch).

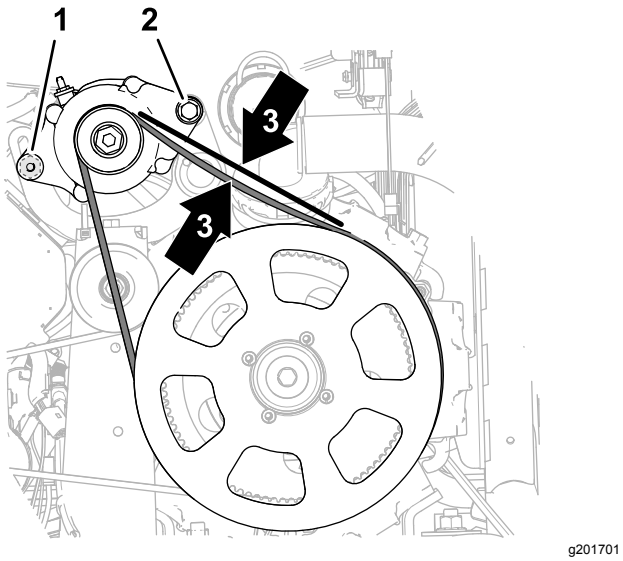


**Figure 186**

1. Flange-head bolt (8 x 25 mm)
2. Flange-head bolt (3/8 x 1-1/2 inches)
3. Belt deflection 9.5 mm (3/8 inch)

5. Torque the flange-head bolt (8 x 25 mm) to 23 to 29 N·m (17 to 21 ft-lb).
6. Torque the flange-head bolt (3/8 x 1-1/2 inches) to 37 to 45 N·m (27 to 33 ft-lb).

# 33

# Connecting the Kit Wire Harness at the Seat Base

**Parts needed for this procedure:**

| | |
|---|---|
| 1 | Relay |
| 1 | Push-in fastener |
| 1 | Fuse (15 A) |
| 1 | Fuse (50 A) |

## Connecting the Alternator (50 A)

1. Connect the 2-socket at the end of the pink wire 57 cm (23-1/2 inches) of the kit wire harness (Figure 187) onto the 2-pin connector of the alternator (50 A).

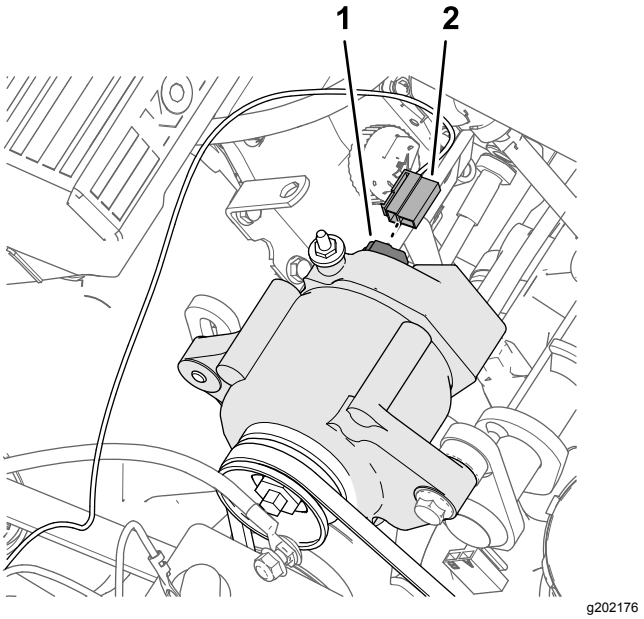


**Figure 187**

1. 2-pin connector—alternator (50 A)
2. 2-socket connector—sense wire, pink 57 cm (23-1/2 inches)

2. Route the pink sense wire away from the alternator belts and secure the wire with a cable tie.
3. Remove the nut from the terminal post (Figure 188) of the alternator (50 A).

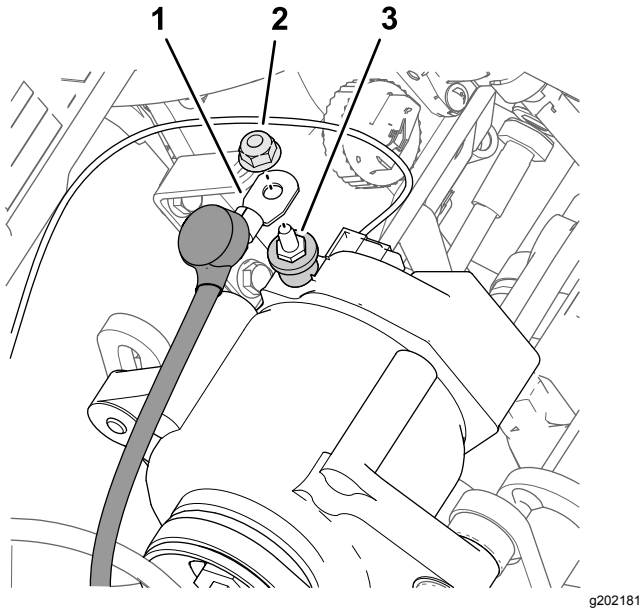


**Figure 188**

1. Alternator wire (red—6 gauge)
2. Nut
3. Terminal post—alternator (50 A)

4. Assemble the red, 6 gauge alternator wire onto the terminal post of the alternator (50 A) with the nut (Figure 188).
5. Route the red alternator toward the battery posts and away from the pulley and alternator belt.
6. Torque the nut to 47 to 57 N·m (34 to 42 ft-lb).
7. Slit the insulator cover over the terminal post of the alternator (Figure 188).

## Connecting the ASC 10 Enable Relay

1. Connect the 5-pin connector of the relay into the 5-socket connector (Figure 189) of the kit wire harness labeled ASC 10 ENABLE RELAY.

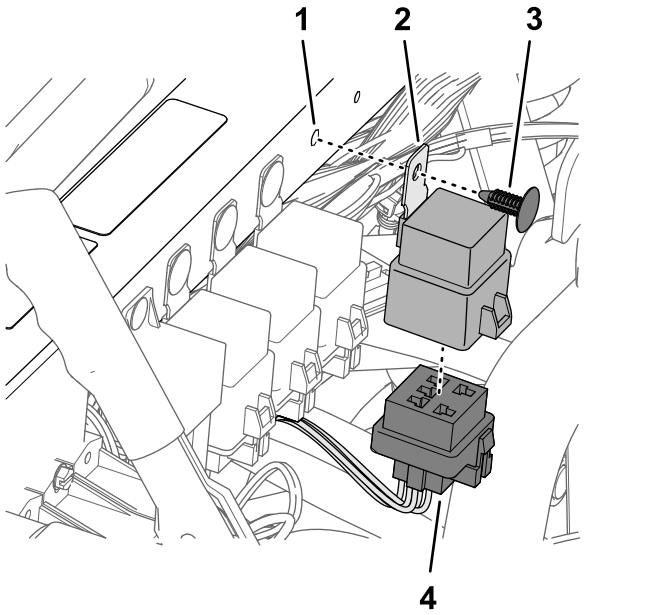


**Figure 189**

1. Hole (shock-support tube)
2. Relay
3. Push-in fastener
4. 5-socket connector (ASC 10 ENABLE RELAY)

2. Align the hole in the mounting tab of the relay with the hole in the shock-support tube, and secure the relay to the tube with a push-in fastener (Figure 189).

## Connecting the Fuse Blocks

1. Set a multi-meter for preforming a continuity test.
2. At fuse block 3 of the machine, insert the multi-meter probe into contact 4 (the right column) of fuse-socket 2 as shown in Figure 190.

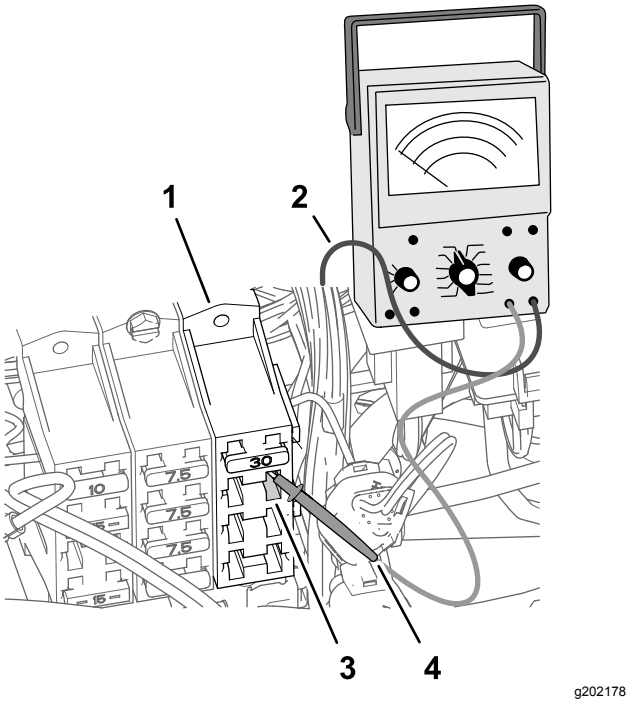


**Figure 190**

1. Fuse block 3 (machine)
2. Multi-meter lead
3. Fuse-socket 2—contact 4 (right column)
4. Multi-meter probe

3. At the front side of the fuse blocks, use the other multi-meter probe to identify the blade connector at the end of the red 10-gauge wire that connects to fuse-socket 2—contact 4.

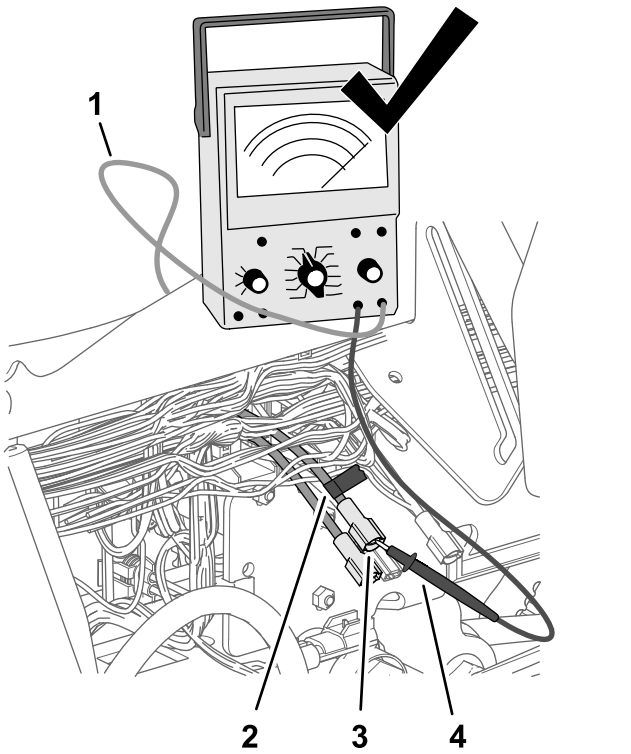


**Figure 191**

1. Multi-meter lead
2. Tape
3. Blade connector (red 10-gauge wire)
4. Multi-meter probe

4. Use a piece of tape to mark the connector and wire that you identified in step 3 (Figure 191).
5. Connect the blade connector that you marked in step 4 into the socket connector at the end of the pink wire 51 mm (2 inches) of the kit wire harness (Figure 192).

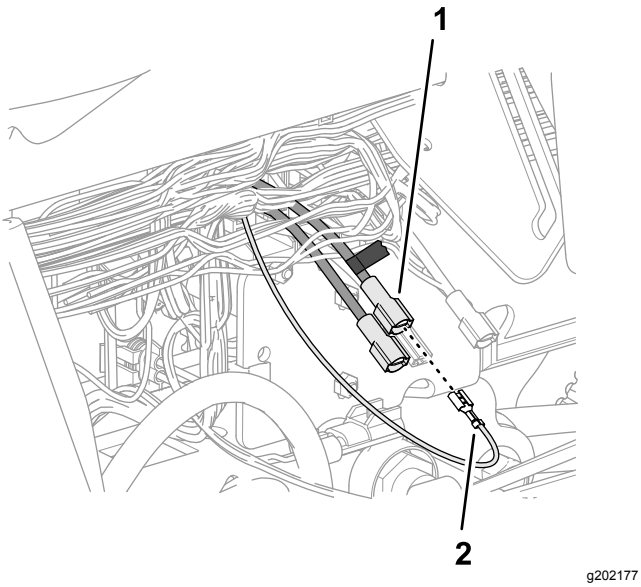


**Figure 192**

1. Marked blade connector (red 10-gauge wire)
2. Socket connector—pink wire 51 mm (2 inches)

6. Insert the fuse (15 A) into fuse-socket 2 of fuse block 3 until the fuse is fully seated (Figure 193).

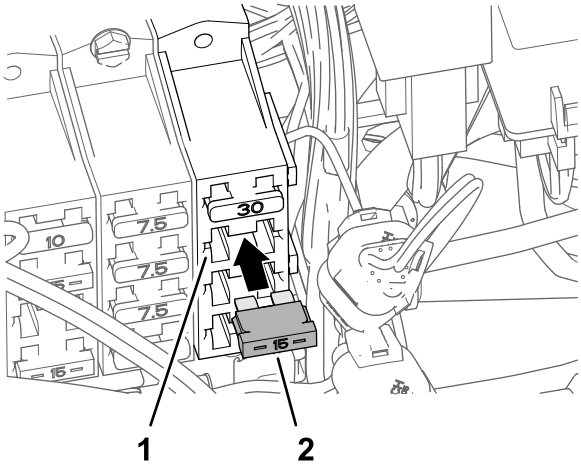


**Figure 193**

1. Fuse-socket 2 (fuse block 3)
2. Fuse (15 A)

7. Insert the fuse (50 A) into inline-fuse block until the fuse is fully seated (Figure 194).

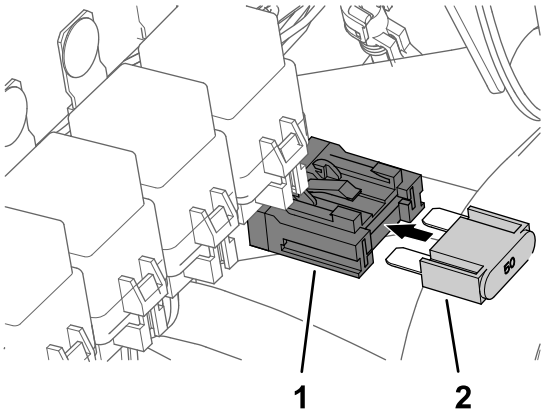


**Figure 194**

1. Inline-fuse block
2. Fuse (50 A)

# 34

# Installing the Wire Harnesses for the Navigation Components

**Parts needed for this procedure:**

| | |
|---|---|
| 1 | Data Harness (navigation system)—GeoLink precision-spray-system kit (Model 41630) |
| 1 | Battery Harness (navigation system)—GeoLink precision-spray-system kit (Model 41630) |
| 8 | Cable tie |
| 1 | Quick-connect clamp (red handle) |
| 1 | Quick-connect clamp (black handle) |

## Connecting the Navigation-Data and Electrical Harnesses

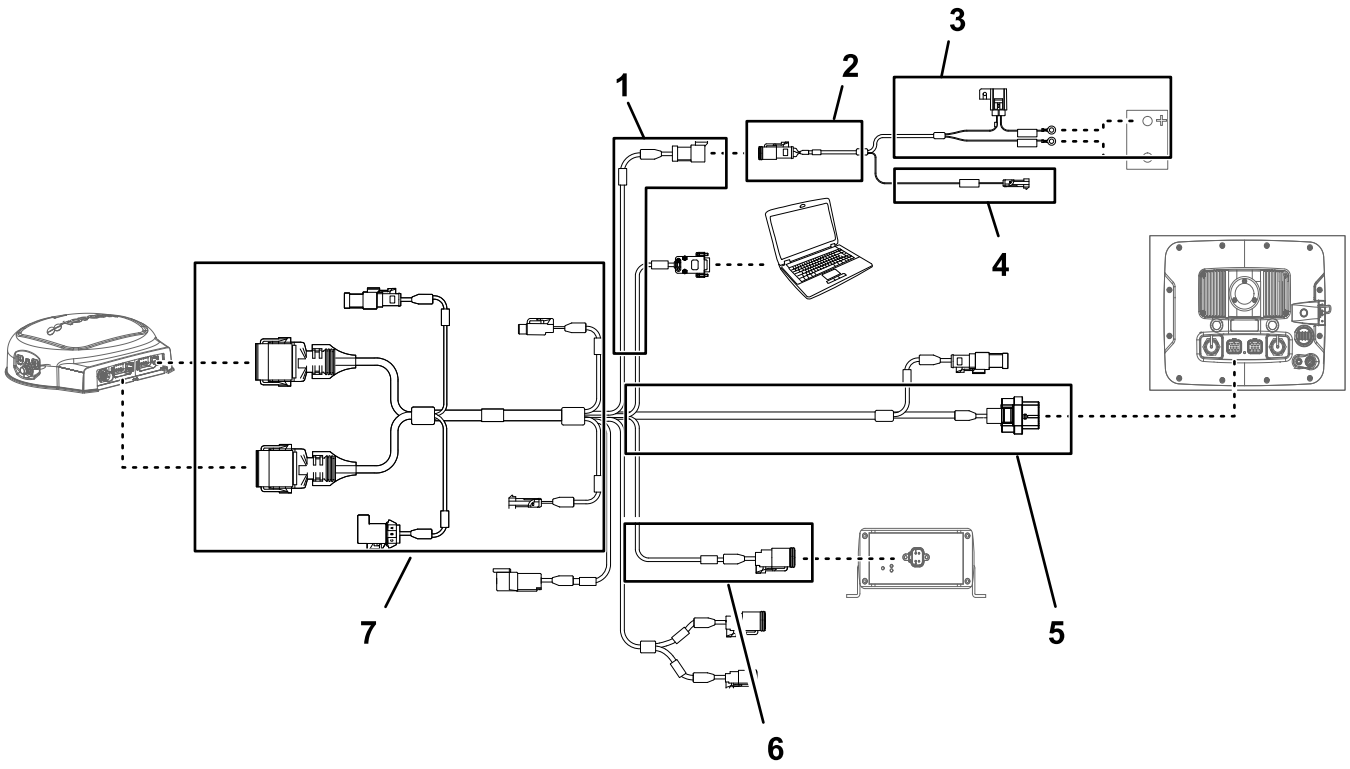


**Figure 195**

1. 100 cm (39-3/8 inch) data-harness branch (electrical power)
2. 100 cm (39-3/8 inch) battery-harness branch
3. 220 cm (86-5/8 inch) battery-harness branch
4. 100 cm (39-3/8 inch) battery-harness branch (switched power)
5. 390 cm (153-1/2 inch) data-harness branch (navigation receiver)
6. 13 cm (5-1/16 inch) data-harness branch (kit harness interface)
7. 220 cm (86-5/8 inch) data-harness branch (sprayer monitor)

***Important:*** **Some connectors of the data harness are not used. Ensure that the caps and plugs of the unused connectors are secure.**

Connect the 3-socket connector (electrical-power interface) of the navigation-electrical harness to the 3-pin connector (electrical-power interface) of the data harness (Figure 195).

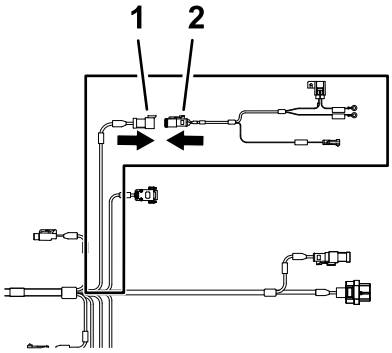


g202247

**Figure 196**

1. 3-pin connector—data harness (SYSTEM POWER SEPARATION)
2. 3-socket connector—battery harness (electrical–power interface)

# Routing and Connecting the Data Cable to the Navigation Receiver

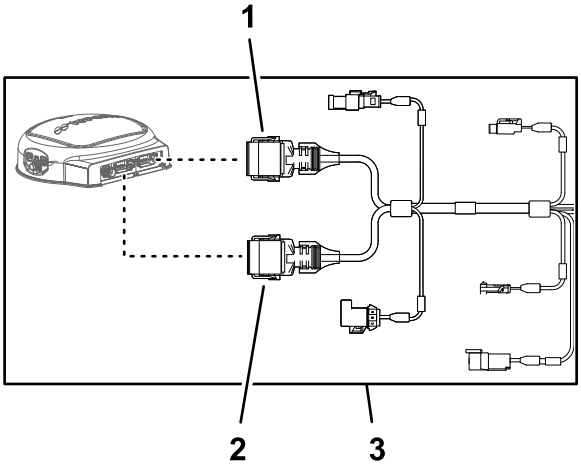


g203668

**Figure 197**

1. 12-socket connector (gray) data harness (navigation receiver)
2. 12-socket connector (black) data harness (navigation receiver)
3. 390 cm (153-1/2 inch) data-harness branch (navigation receiver)

1. Route the 390 cm (153-1/2 inch) branch of the data-harness along the back side of the left, vertical roll-bar tube.

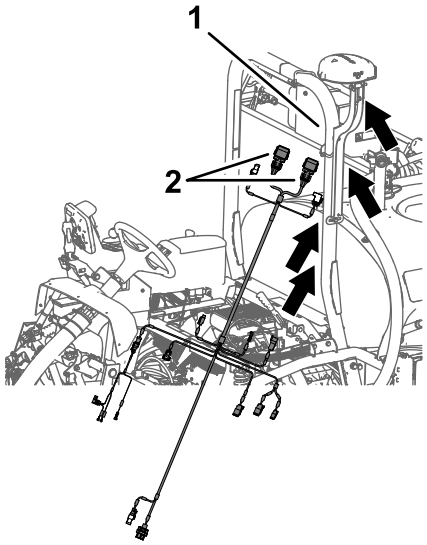


g202268

**Figure 198**

1. Left, vertical roll-bar tube
2. 12-socket connectors—390 cm (153-1/2 inch) data-harness branch

2. Route the 390 cm (153-1/2 inch) branch of the data harness along the right ROPS tube with the 12-socket connector (gray) and 12-socket connector (black) up toward the navigation receiver (Figure 199).

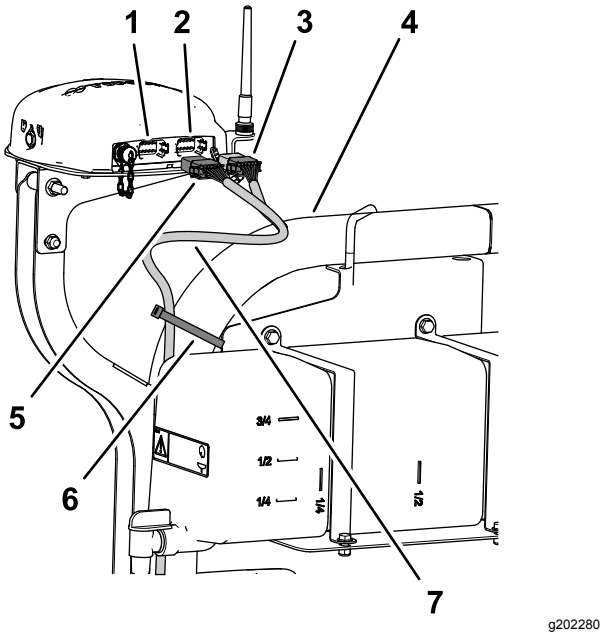


g202280

**Figure 199**

1. 12-pin connector left (gray)—navigation receiver
2. 12-pin connector right (black)—navigation receiver
3. 12-socket connector (black)—data harness
4. Roll bar
5. 12-socket connector (gray/black)—data harness
6. Cable tie
7. 390 cm (153-1/2 inch) data-harness branch

3. Align the 2 keys at the long face of the gray and black 12-socket connector of the data harness with the 2 key slots in the bottom, horizontal wall of the left (gray) 12-pin connector of the navigation receiver (Figure 200).

   **Note:** Use caution when connecting wire harness to the navigation receiver; the alignment keys of the harness connectors are unique to the keyways of the pin connectors of the navigation receiver.

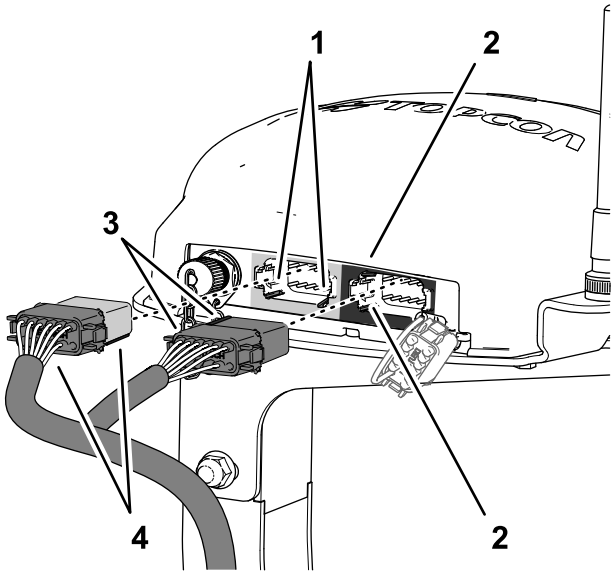


g202413

**Figure 200**

1. Key slots—bottom, horizontal wall (left (gray) 12-pin connector—navigation receiver)
2. Key slots—left, vertical wall (right (black) 12-pin connector—navigation receiver)
3. Alignment keys—short face (black 12-socket connector—data harness)
4. Alignment keys—long face (gray/black 12-socket connector—data harness)

4. Connect the gray and black 12-socket connector of the data harness into the left (gray) 12-pin connector of the navigation receiver until the connector locks snap together securely (Figure 200).
5. Align the 2 keys at the short side of the black 12-socket connector of the data harness with the 2 key slots in the left, vertical wall of the right (black) 12-pin connector of the navigation receiver (Figure 200).

   **Note:** Use caution when connecting wire harness to the navigation receiver; the alignment keys of the harness connectors are unique to the keyways of the pin connectors of the navigation receiver.
6. Connect the black only 12-socket connector of the data harness into the left (black) 12-pin connector of the navigation receiver until the connector locks snap together securely (Figure 200).
7. Secure the 390 cm (153-1/2 inch) branch of the data harness to the right ROPS tube with 2 cable ties as shown in Figure 199.

   **Note:** Ensure that the cable is slack between the 12-socket connectors and the cable tie.

# Routing the Navigation-Electrical Harness at the Right Side of the Machine

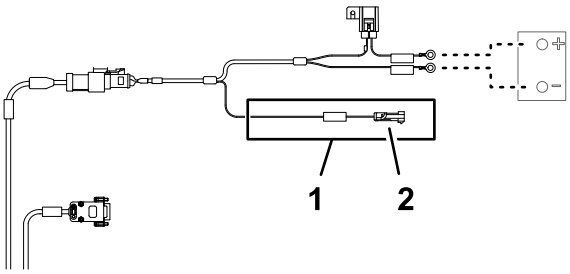


g203670

**Figure 201**

1. 1-pin connector—electrical interconnect branch (***IMPORTANT*** ONLY CONNECT THIS WIRE TO SWITCHED 12V POWER SOURCE)
2. 100 cm (39-3/8 inch) battery-harness branch (switched power)

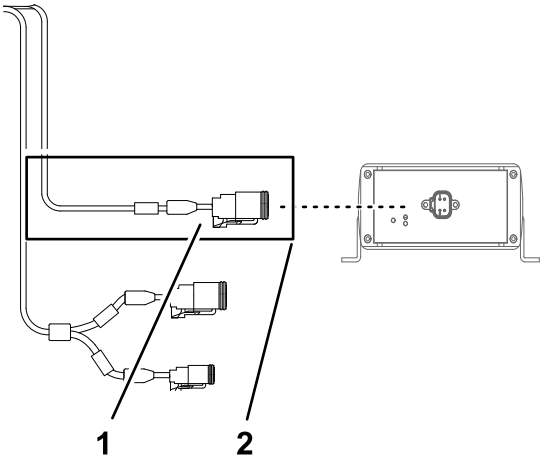


g203666

**Figure 202**

1. 4-pin connector (CAN 2/ASC10 BUS)
2. 13 cm (5-1/16 inch) data-harness branch (kit harness interface)

1. Route the data harness and battery harness down the back of the left, vertical roll bar to the cross member for the seat support (Figure 203).

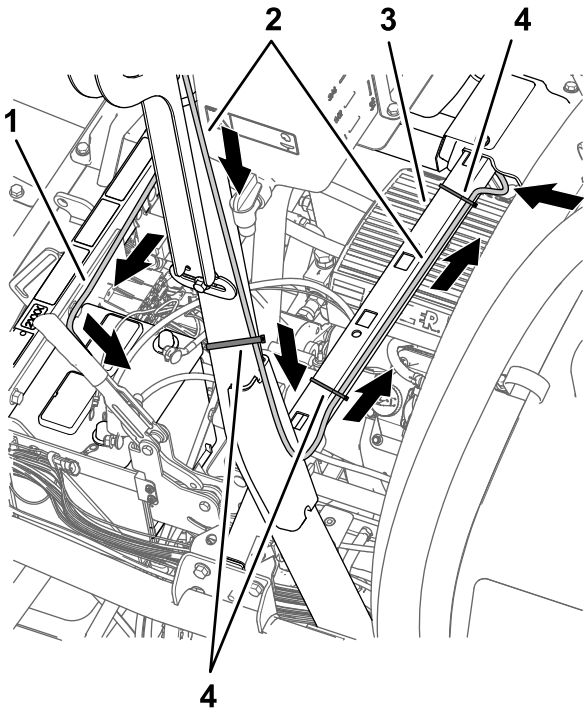


g202521

**Figure 203**

1. 220 cm (86-5/8 inch) battery-harness branch (do not route the 100 cm (39-3/8 inch) electrical-interconnect branch (switched power) with the battery-harness branch)
2. 390 cm (153-1/2 inch) data-harness branch (navigation receiver)
3. Cross member (seat support)
4. Cable ties

2. Secure the 390 cm (153-1/2 inch) data-harness branch for the navigation receiver to the roll bar as shown in Figure 203.
3. Connect the 1 pin connector of the battery harness labeled ***IMPORTANT*** ONLY CONNECT THIS WIRE TO SWITCHED 12V POWER SOURCE into the 1-socket connector of the 66 cm (26 inch) kit wire-harness branch (Figure 204) labeled (SW'D PWR FOR GEN 2 TOPCON).

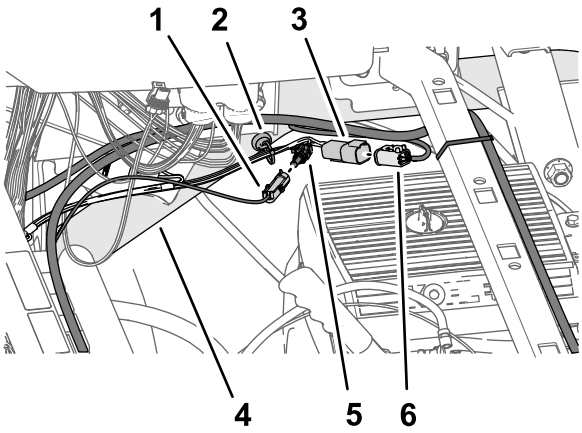


**Figure 204**

1. 1-pin connector—battery-harness branch (***IMPORTANT*** ONLY CONNECT THIS WIRE TO SWITCHED 12V POWER SOURCE)
2. Magnetic harness anchor
3. 4-pin connector—66 cm (26 inch) kit wire-harness branch (ASC 10 PWR & CAN FROM X30)
4. Right, upper-frame tube
5. 1-socket connector—66 cm (26 inch) kit wire-harness branch (SW'D PWR FOR GEN 2 TOPCON)
6. 4-socket connector—data-harness branch (CAN 2/ASC10 BUS)

4. Connect the 4-pin connector of the 66 cm (26 inch) kit wire-harness branch labeled ASC 10 PWR & CAN FROM X30 into the 4-socket connector of the data-harness branch labeled CAN 2/ASC10 BUS (Figure 204).
5. Route the data harness and battery harness across the cross member for the seat support and secure the 390 cm (153-1/2 inch) data-harness branch to the cross member with 2 cable ties (Figure 203 and Figure 205).

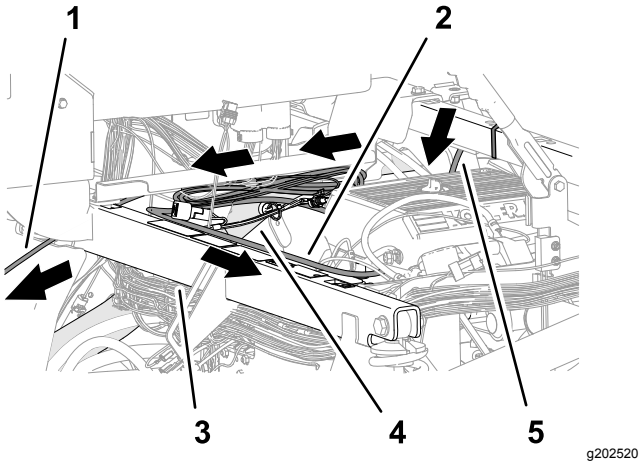


**Figure 205**

1. 220 cm (86-5/8 inch) data-harness branch (sprayer monitor)
2. 220 cm (86-5/8 inch) battery-harness branch
3. Shock-support tube
4. Right, upper-frame tube
5. 390 cm (153-1/2 inch) data-harness branch (navigation receiver)

6. Route the 220 cm (86-5/8 inch) battery-harness branch along the right, upper-frame tube (Figure 205).
7. Route the 220 cm (86-5/8 inch) battery-harness branch across the shock-support tube toward the battery (Figure 205).

   **Note:** Ensure that the 100 cm (39-3/8 inch) electrical-interconnect branch (switched power) remains routed against the right, upper-frame tube.
8. Route the 220 cm (86-5/8 inch) data-harness branch (the harness branch with the 26-socket connector) below the control console and forward toward the dash panel (Figure 205).

## Routing and Connecting the Data Cable to the Sprayer Monitor

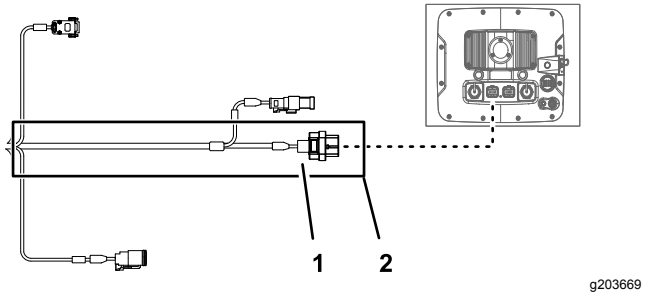


**Figure 206**

1. 26-socket connector—data harness (sprayer monitor)
2. 220 cm (86-5/8 inch) data-harness branch (sprayer monitor)

1. Route the 220 cm (86-5/8 inch) data-harness branch (the harness branch with the 26-socket connector) forward and under the dash panel (Figure 207).

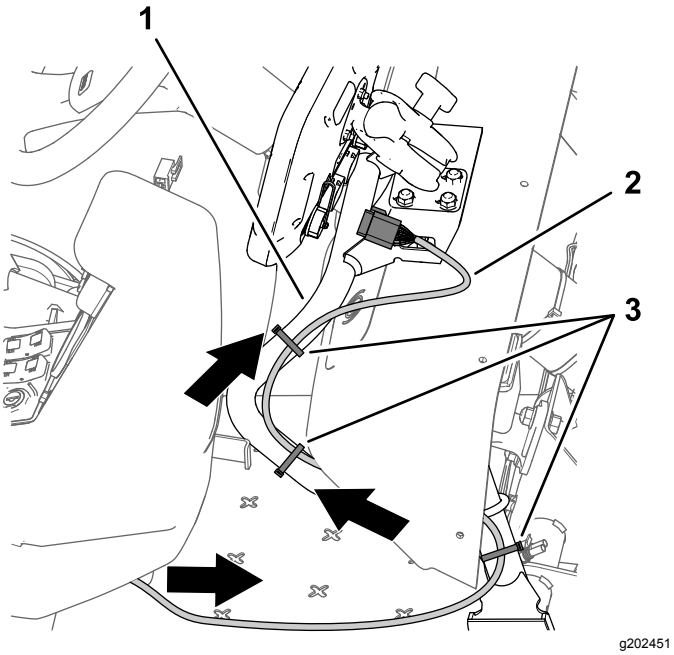


**Figure 207**

1. Support tube (monitor)
2. 220 cm (86-5/8 inch) data-harness branch
3. Cable ties

2. Route the 220 cm (86-5/8 inch) data-harness branch along the support tube for the monitor (Figure 207)
3. Align the 26-socket connector of the data harness with the 26-pin connector of the sprayer monitor and press the socket connector into the pin connector until the latch of the connector snaps securely (Figure 208).

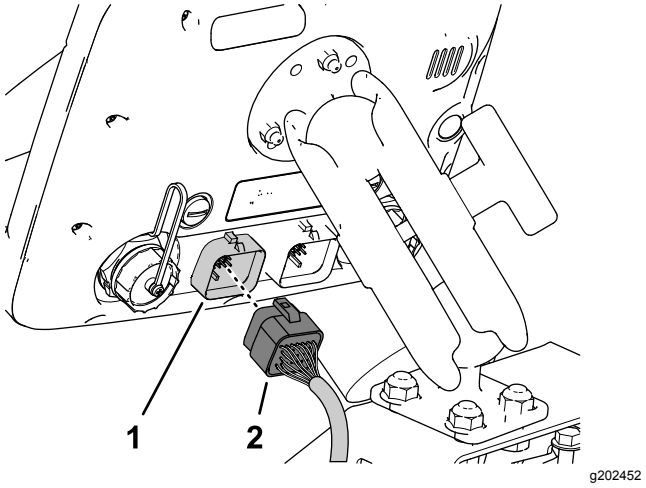


**Figure 208**

1. 26-pin connector (sprayer monitor)
2. 26-socket connector—data harness (sprayer monitor)

4. Ensure that the 220 cm (86-5/8 inch) data-harness branch has enough slack to allow the sprayer operator to adjust the position of the monitor and secure the harness to the support tube for the monitor with cable ties as shown in Figure 207.

## Assembling the Quick-Disconnect Clamps to the Battery

1. Remove the hex nuts and washers from the red and black handle quick-connect clamps (Figure 209).

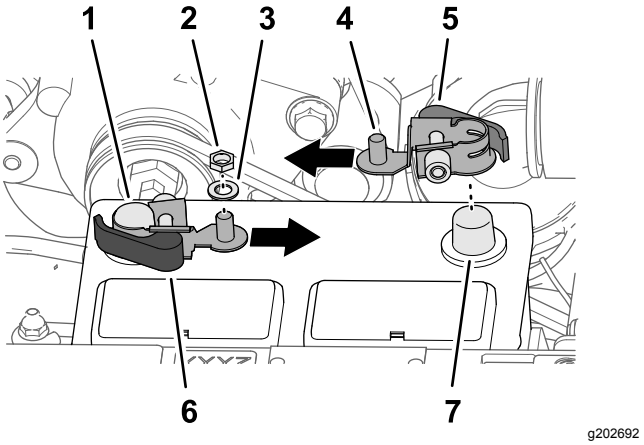


**Figure 209**

1. Negative battery post
2. Hex nut (1/4 inch—quick-connect clamp)
3. Washer (1/4 inch—quick-connect clamp)
4. Threaded post
5. Red-latch handle (quick-connect clamp)
6. Black-latch handle (quick-connect clamp)
7. Positive battery post

2. Open the latch handle of the quick-connect clamp with the black handle (Figure 210).

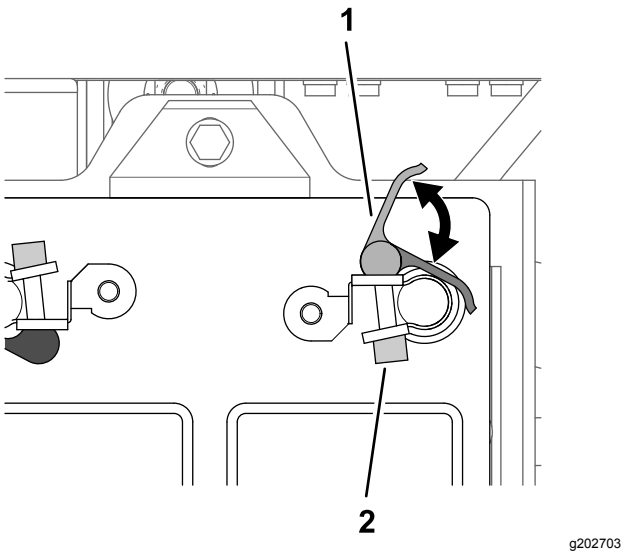


**Figure 210**

1. Handle (quick-connect clamp)
2. Knurled nut

3. Assemble the quick-connect clamp onto the negative battery post, with the threaded post of the clamp aligned toward the center of the battery as shown in Figure 209.
4. Close the latch handle of the quick-connect clamp (Figure 210).

   **Note:** If you need to adjust the clamping force of the quick-connect clamp, open the handle, rotate the knurled nut to increase or decrease the clamping force, and close the handle for the clamp.
5. Repeat steps 2 through 4 for the quick-connect clamp with the red handle at the positive battery post.

# Connecting the Battery

**⚠ WARNING**

**Electrical sparks can cause the battery gasses to explode, resulting in personal injury.**

**Incorrect battery cable routing could damage the sprayer and cables, causing sparks.**

- **Always disconnect the negative (black) battery cable before disconnecting the positive (red) cable.**
- **Always connect the positive (red) battery cable before connecting the negative (black) cable.**

**Battery terminals or metal tools could short against metal sprayer components, causing sparks.**

- **When removing or installing the battery, do not allow the battery terminals to touch any metal parts of the sprayer.**
- **Do not allow metal tools to short between the battery terminals and metal parts of the sprayer.**
- **Always keep the battery strap in place to protect and secure the battery.**

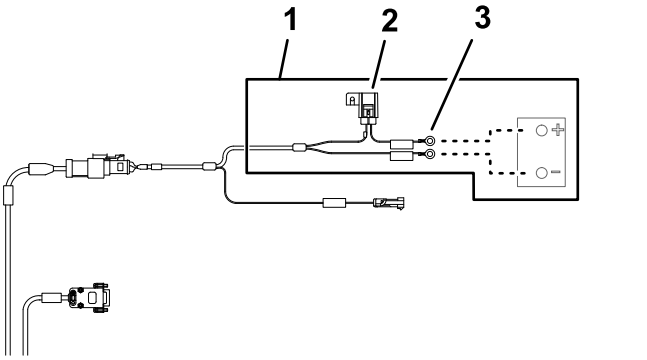


**Figure 211**

1. 220 cm (86-5/8 inch) battery-harness branch
2. 10 A fuse (battery)
3. Ring terminals (battery)

1. Slit the insulator cover of the positive battery cable to the starter as shown in Figure 212.

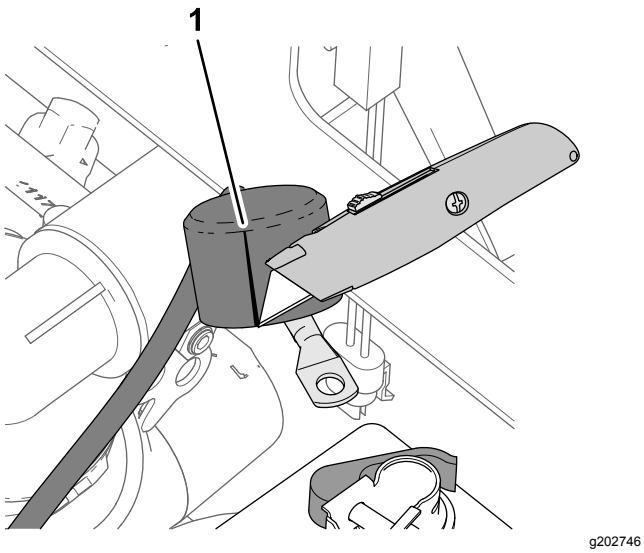


**Figure 212**

1. Slit (insulator cover—positive battery cable to the starter)

2. Assemble the following wire and cable terminals onto the threaded post of the positive battery terminal (Figure 213) in the following order:

   **Note:** Ensure that the battery-cable terminal (positive) to the engine starter is positioned at the top of the stack of terminals on the threaded post.

   A. Ring terminal—22 cm (8-1/2 inch) machine-wire harness labeled BATTERY (+)

   B. Ring terminal—220 cm (86-5/8 inch) battery-harness branch labeled ***IMPORTANT*** CONNECT THIS WIRE TO POSITIVE ON BATTERY

   C. Ring terminal—60 cm (23-1/2 inch) kit wire-harness branch labeled TO BATTERY POSITIVE

   D. Battery-cable terminal (positive)—to the alternator (50 A)

   E. Battery-cable terminal (positive)—to the engine starter

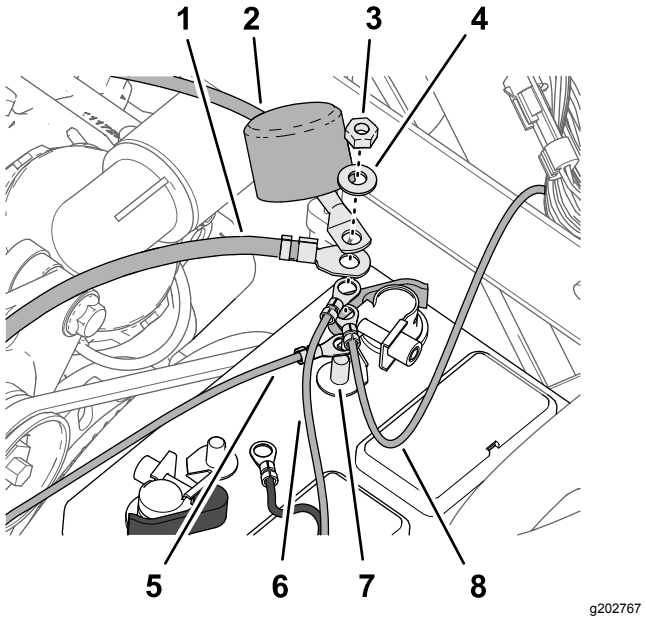


**Figure 213**

1. Battery-cable terminal (positive)—to the alternator (50 A)
2. Battery-cable terminal (positive)—to the engine starter
3. Hex nut (1/4 inch—quick-connect clamp)
4. Washer (1/4 inch—quick-connect clamp)
5. Ring terminal—60 cm (23-1/2 inch) kit wire-harness branch (TO BATTERY POSITIVE)
6. Ring terminal—220 cm (86-5/8 inch) battery-harness branch (***IMPORTANT*** CONNECT THIS WIRE TO POSITIVE ON BATTERY)
7. Threaded post (positive battery terminal)
8. Ring terminal—22 cm (8-1/2 inch) machine-wire harness (BATTERY (+))

3. Assemble the hex nut (1/4 inch) and washer (1/4 inch) onto the threaded post, and torque the nut to 1017 to 1234 N·cm (90 to 110 in-lb).
4. Align the insulator cover of the positive battery cable to the starter over the threaded post (Figure 213).
5. Assemble the following wire and cable terminals onto the threaded post of the negative battery terminal (Figure 214) in the following order:

   **Note:** Ensure that the battery-cable terminal (negative) to the engine and chassis ground is positioned at the top of the stack of terminals on the threaded post.

   A. Ring terminal—220 cm (86-5/8 inch) battery-harness branch labeled (***IMPORTANT*** CONNECT THIS WIRE TO – VE TERMINAL OF BATTERY WHICH IS CONNECTED TO TRACTOR FRAME)

   B. Ring terminal—60 cm (23-1/2 inch) kit wire-harness branch—battery negative

C. Battery-cable terminal (negative)—to the engine and chassis ground

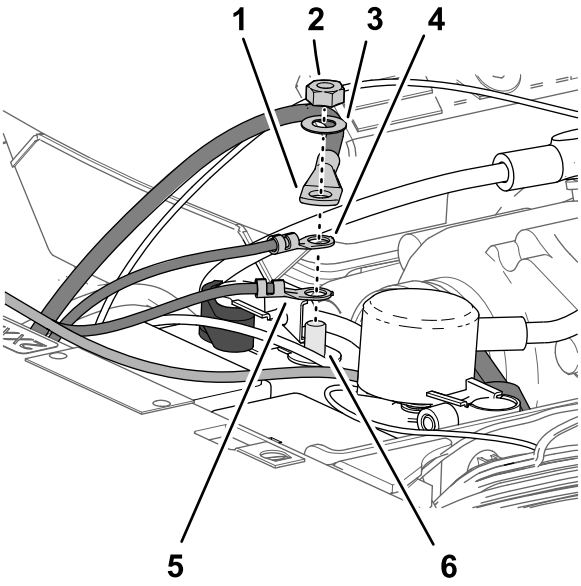


**Figure 214**

1. Battery-cable terminal (negative)—to the engine and chassis ground
2. Hex nut (1/4 inch—quick-connect clamp)
3. Washer (1/4 inch—quick-connect clamp)
4. Ring terminal—60 cm (23-1/2 inch) kit wire-harness branch—battery negative
5. Ring terminal—220 cm (86-5/8 inch) battery-harness branch (***IMPORTANT*** CONNECT THIS WIRE TO – VE TERMINAL OF BATTERY WHICH IS CONNECTED TO TRACTOR FRAME))
6. Threaded post (negative battery terminal)

## Securing the Harness

1. Gather the excess length of the data harness against the right, upper-frame tube (Figure 215).

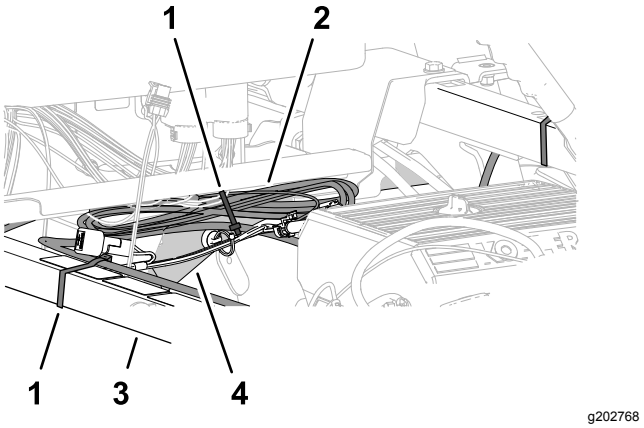


**Figure 215**

1. Cable tie
2. Data-harness bundle
3. Shock-support tube
4. Right, upper-frame tube

2. Align the data harness to the shock-support tube, and secure the harness to the tube with a cable tie (Figure 215).
3. Align the data-harness bundle to the right, upper-frame tube, and secure the harness bundle to the frame tube with a cable tie (Figure 215).
4. Ensure that there is clearance between the pulleys and belts and the data harness, battery harness, kit wire harness, and battery cables.

   Secure the wire harness and cables with cable ties as needed to provide clearance away from the belts and pulleys.

# 35

# Installing the Hood and the Left and Right Front Fenders

**Parts needed for this procedure:**

| | |
|---|---|
| 13 | Push-in fastener |

## Installing the Hood

1. Align the hood holes in the hood with the holes in the dash panel and frame of the machine (Figure 216).

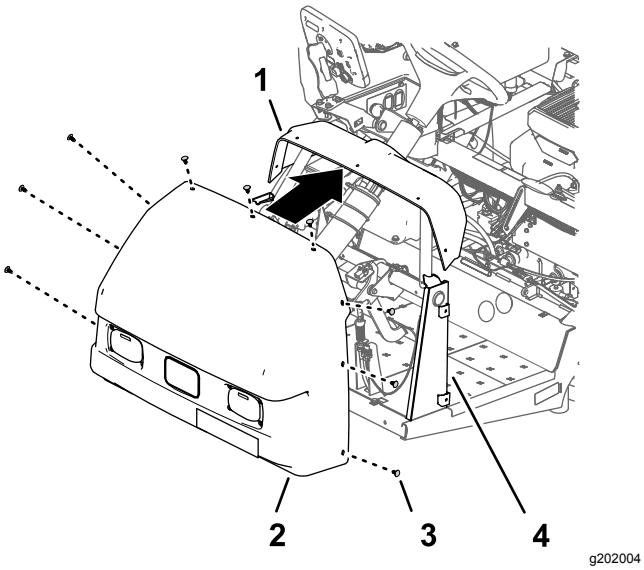


**Figure 216**

1. Dash panel
2. Hood
3. Push-in fastener
4. Dash support

2. Secure the hood to the dash and frame with 9 push-in fastener (Figure 216).
3. Connect the 2 electrical connectors (2-socket) of the machine wire harness from the 2-pin connectors of the left and right headlights (Figure 217).

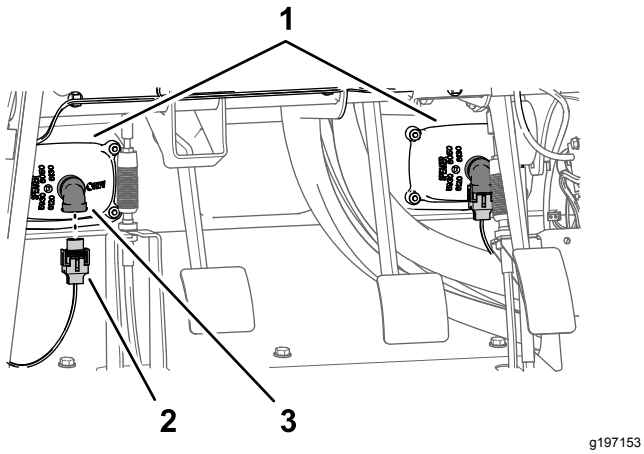


**Figure 217**

1. Headlights
2. 2-socket connector (machine wire harness)
3. 2-pin connector (headlight)

# Installing the Left and Right Front Fenders

1. Align the inner-fender shroud to the left, upper- and left, lower-frame tubes (Figure 217).

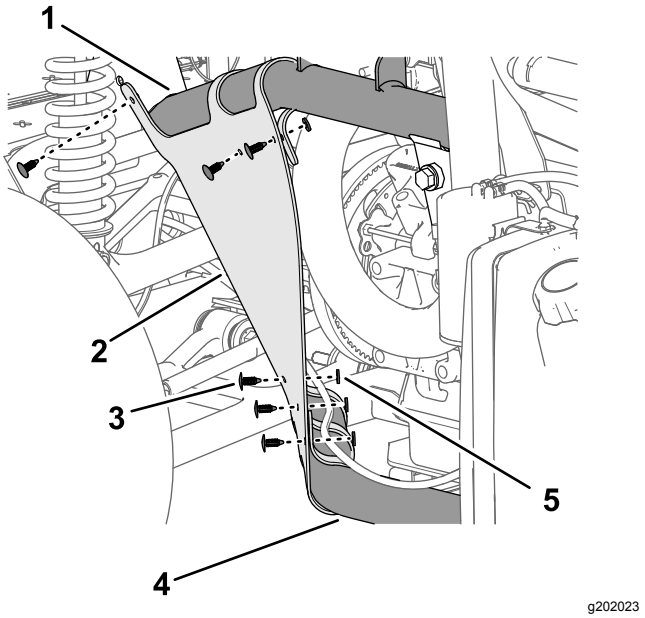


**Figure 218**

1. Left, upper-frame tube
2. Inner-fender shroud
3. Push-in fastener
4. Left, lower-frame tube
5. Washer (9/16 x 1/2 inch)

2. Secure the inner-fender shroud to the frame tubes with the 6 push-in fasteners (Figure 218).
3. Align the holes in the fender with the holes in the frame of the machine as shown in Figure 218.

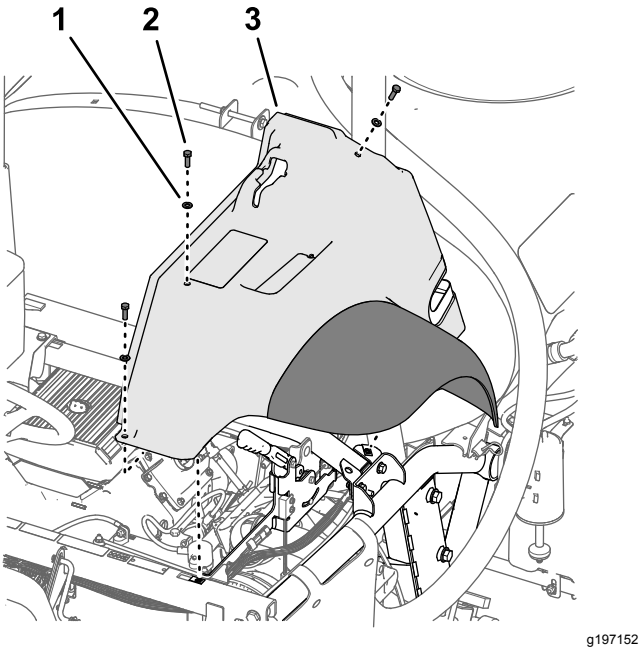


**Figure 219**

1. Washer (5/16 inch)
2. Bolt (5/16 x 1 inch)
3. Left, front fender

4. Loosely assemble the fender to the frame (Figure 219) with the 3 bolt (5/16 x 1 inch) and 3 washer (5/16 inch) that you removed in step 2

of Removing the Left and Right Front Fenders (page 11).

5. Secure the fender to the frame channel with the 2 push-in fasteners (Figure 220).

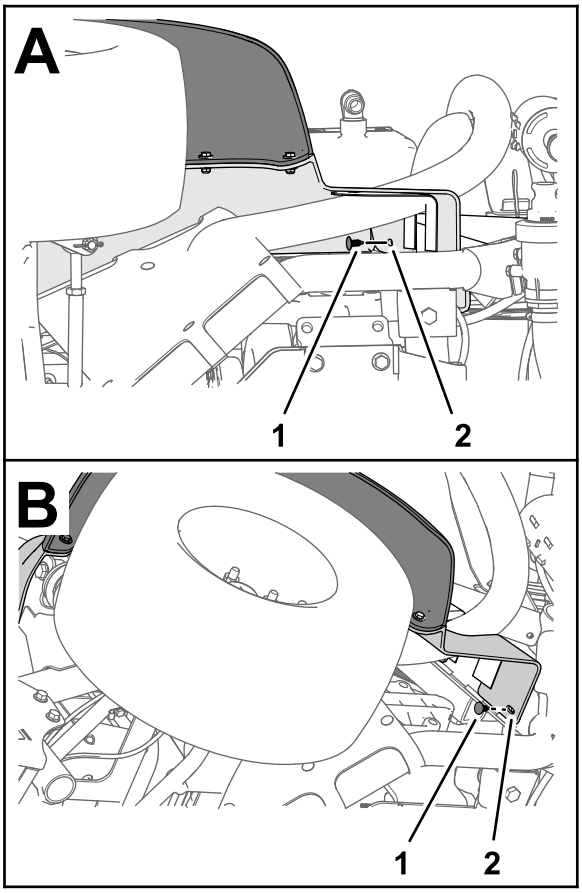


g264614

**Figure 220**

1. Push-in fastener
2. Left, front fender

6. Torque the bolt (5/16 x 1 inch) to 1978 to 2542 N·cm (175 to 225 in-lb).
7. Repeat steps 1 through 6 for the inner-fender shroud and fender at the other side of the machine.

# 36

# Installing the Engine-Access Panel and the Seat

**No Parts Required**

## Installing the Engine-Access Panel

1. Align the latches of the engine access panel with the bushings in the panel-support brackets on the roll bar (Figure 221).

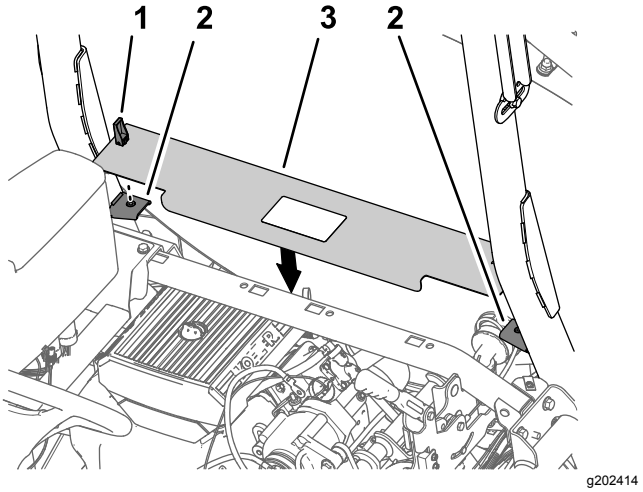


g202414

**Figure 221**

1. Latch
2. Panel-support brackets
3. Engine access panel

2. Assemble the panel onto the brackets (Figure 221).
3. Rotate the handles latches down to secure the panel to the brackets (Figure 221).

## Installing the Seat

1. Align the seat and seat plate to the chassis of the machine (Figure 222).

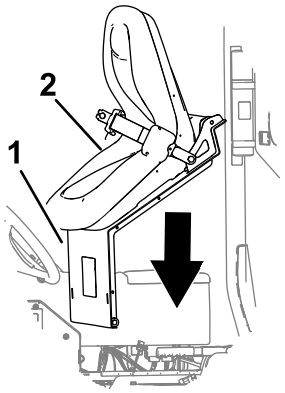


**Figure 222**

1. Seat plate
2. Seat

2. Align the holes in the pivot fittings of the seat pan with the holes in the chassis bracket (Figure 223).

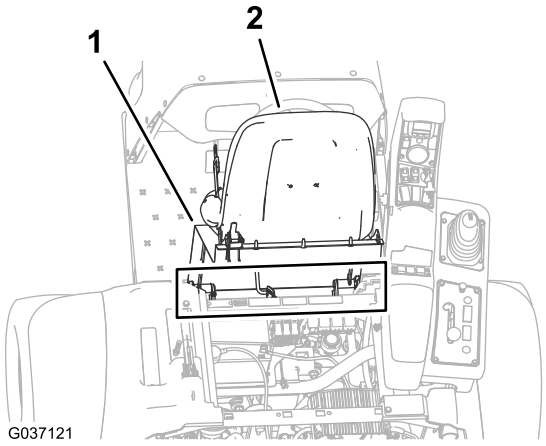


**Figure 223**

1. Seat plate
2. Seat
3. Hairpin
4. Pivot fitting (seat pan)
5. Chassis bracket
6. Pivot pin

3. Assemble the seat pan to the chassis brackets with the 2 pivot pins (Figure 223).
4. Secure the pivot pins to the machine with the 2 hairpins (Figure 223).

5. Assemble the prop rod to the bracket of the seat with the washer and hairpin (Figure 224).

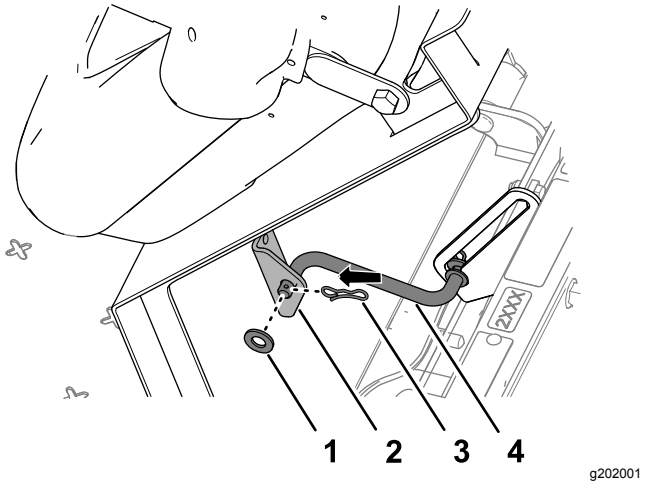


**Figure 224**

1. Washer
2. Bracket (seat)
3. Hairpin
4. Prop rod

6. Plug the 2-socket connector of the machine wire harness into the connector for the seat switch until the connectors latch securely (Figure 225).

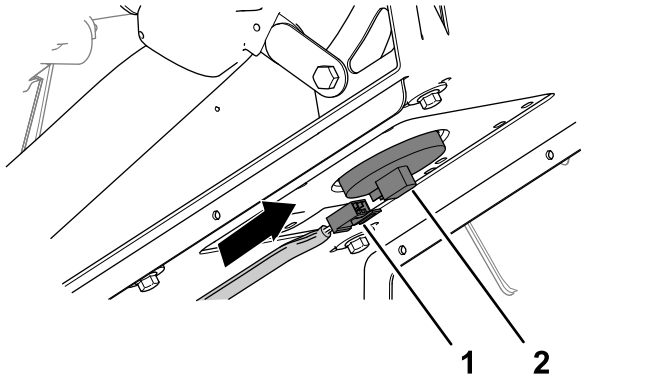


**Figure 225**

1. 2-socket connector (machine wire harness)
2. Seat-switch connector

7. Rotate the seat forward slightly, remove the prop rod from the detent, rotate the seat down until the seat latches securely.

# 37

# Programming the Machine Settings

**No Parts Required**

## Procedure

1. Insert the key into the key switch and rotate it to the ON position.

   The splash screen appears in the InfoCenter display and the indicator light illuminates briefly (Figure 226).

   **Note:** Do not start the engine.

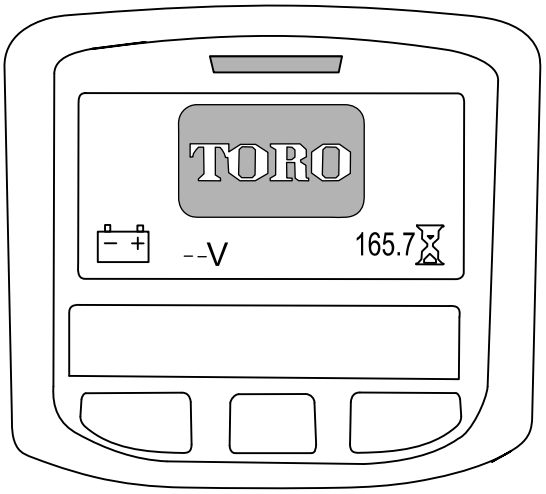


g202877

**Figure 226**

2. At the Home screen, press the center button on the InfoCenter to access the navigation screen (Figure 227).

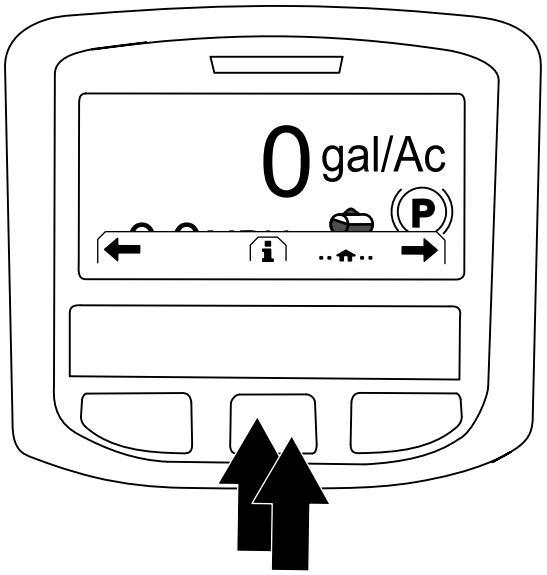


g202868

**Figure 227**

3. Press the center button on the InfoCenter to access the Main Menu (Figure 227).
4. At the MAIN MENU screen, press the center button to navigate to the SETTING option, and press the right button to select the option (Figure 228).

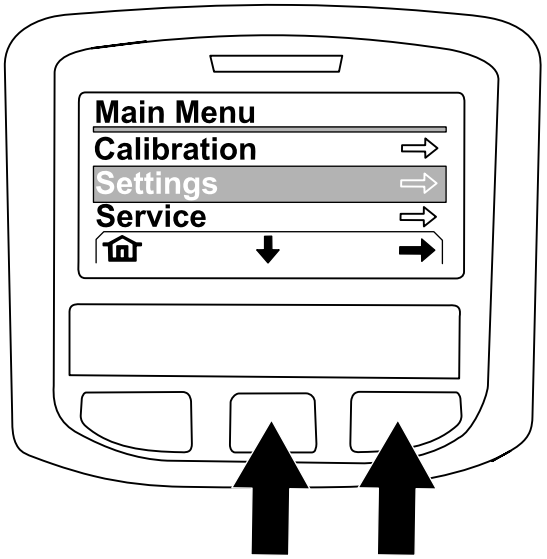


g202874

**Figure 228**

5. At the SETTING screen, press the center button to navigate to the PROTECTED SETTINGS option, and press the right button to select the option.

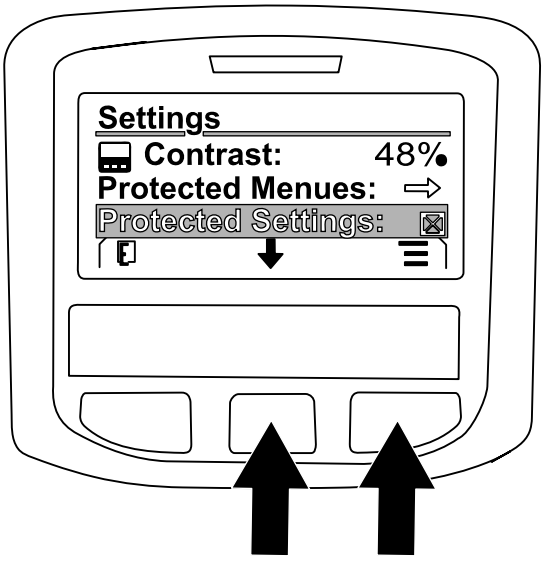


g202869

**Figure 229**

6. Enter the PIN code as follows:
   A. Press the center button as needed to enter the PIN code number for the left position (Figure 230).

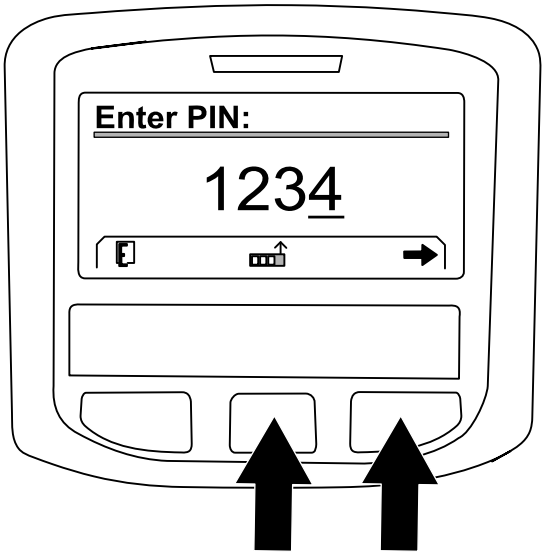


g202870

**Figure 230**

   B. Press the right button to navigate to the next PIN code number position (Figure 230).
   C. Repeat steps A and B for the 3 other PIN code number positions.
   D. When all the PIN code numbers are entered press the right button (Figure 230) and then press the center button to enter the PIN code (Figure 231).

      The indicator light illuminates briefly.

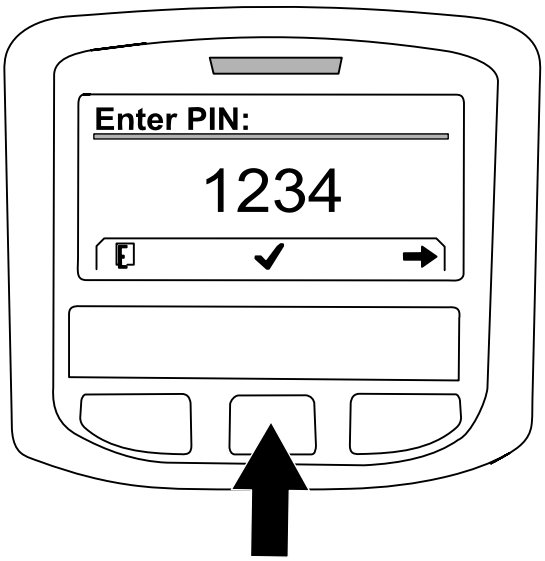


g202871

**Figure 231**

7. Press the center button to navigate to the GEOLINK option, and press the right button to set the option (Figure 232).

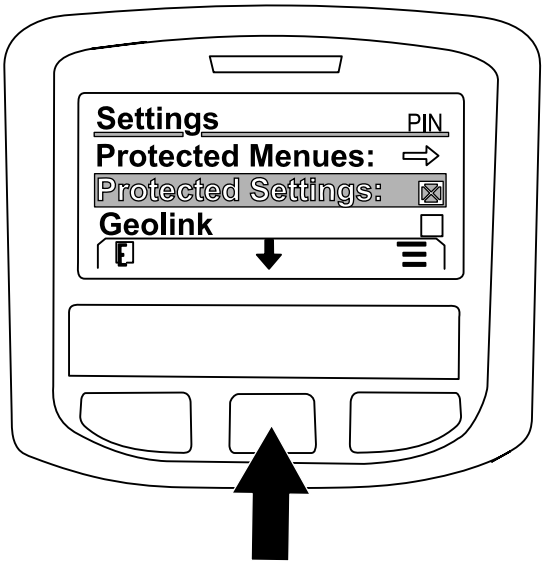


g202875

**Figure 232**

   The GeoLink confirmation screen displays in the InfoCenter (Figure 233).

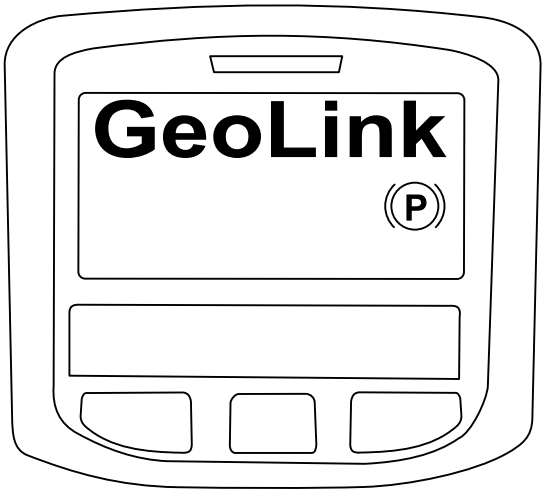


g202872

**Figure 233**

8. Rotate the ignition switch to the OFF position and then to the ON position.
9. The GEOLINK splash screen initially appears when you rotate the key switch to the ON position.

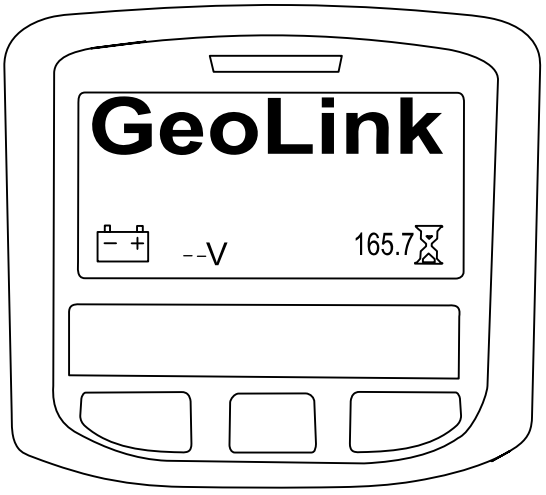


g202878

**Figure 234**

# EEA/UK Privacy Notice

**Toro's Use of Your Personal Information**

The Toro Company ("Toro") respects your privacy. When you purchase our products, we may collect certain personal information about you, either directly from you or through your local Toro company or dealer. Toro uses this information to fulfil contractual obligations - such as to register your warranty, process your warranty claim or to contact you in the event of a product recall - and for legitimate business purposes - such as to gauge customer satisfaction, improve our products or provide you with product information which may be of interest. Toro may share your information with our subsidiaries, affiliates, dealers or other business partners in connection these activities. We may also disclose personal information when required by law or in connection with the sale, purchase or merger of a business. We will never sell your personal information to any other company for marketing purposes.

**Retention of your Personal Information**

Toro will keep your personal information as long as it is relevant for the above purposes and in accordance with legal requirements. For more information about applicable retention periods please contact legal@toro.com.

**Toro's Commitment to Security**

Your personal information may be processed in the US or another country which may have less strict data protection laws than your country of residence. Whenever we transfer your information outside of your country of residence, we will take legally required steps to ensure that appropriate safeguards are in place to protect your information and to make sure it is treated securely.

**Access and Correction**

You may have the right to correct or review your personal data, or object to or restrict the processing of your data. To do so, please contact us by email at legal@toro.com. If you have concerns about the way in which Toro has handled your information, we encourage you to raise this directly with us. Please note that European residents have the right to complain to your Data Protection Authority.

# The Toro Warranty

A Two-Year Limited Warranty

## Conditions and Products Covered

The Toro Company and its affiliate, Toro Warranty Company, pursuant to an agreement between them, jointly warrant your Toro Commercial product ("Product") to be free from defects in materials or workmanship for two years or 1500 operational hours*, whichever occurs first. This warranty is applicable to all products with the exception of Aerators (refer to separate warranty statements for these products). Where a warrantable condition exists, we will repair the Product at no cost to you including diagnostics, labor, parts, and transportation. This warranty begins on the date the Product is delivered to the original retail purchaser.
* Product equipped with an hour meter.

## Instructions for Obtaining Warranty Service

You are responsible for notifying the Commercial Products Distributor or Authorized Commercial Products Dealer from whom you purchased the Product as soon as you believe a warrantable condition exists. If you need help locating a Commercial Products Distributor or Authorized Dealer, or if you have questions regarding your warranty rights or responsibilities, you may contact us at:

Toro Commercial Products Service Department
Toro Warranty Company
8111 Lyndale Avenue South
Bloomington, MN 55420-1196

952–888–8801 or 800–952–2740
E-mail: commercial.warranty@toro.com

## Owner Responsibilities

As the Product owner, you are responsible for required maintenance and adjustments stated in your *Operator's Manual*. Failure to perform required maintenance and adjustments can be grounds for disallowing a warranty claim.

## Items and Conditions Not Covered

Not all product failures or malfunctions that occur during the warranty period are defects in materials or workmanship. This warranty does not cover the following:

- Product failures which result from the use of non-Toro replacement parts, or from installation and use of add-on, or modified non-Toro branded accessories and products. A separate warranty may be provided by the manufacturer of these items.
- Product failures which result from failure to perform recommended maintenance and/or adjustments. Failure to properly maintain your Toro product per the Recommended Maintenance listed in the *Operator's Manual* can result in claims for warranty being denied.
- Product failures which result from operating the Product in an abusive, negligent, or reckless manner.
- Parts subject to consumption through use unless found to be defective. Examples of parts which are consumed, or used up, during normal Product operation include, but are not limited to, brake pads and linings, clutch linings, blades, reels, rollers and bearings (sealed or greasable), bed knives, spark plugs, castor wheels and bearings, tires, filters, belts, and certain sprayer components such as diaphragms, nozzles, and check valves, etc.
- Failures caused by outside influence. Conditions considered to be outside influence include, but are not limited to, weather, storage practices, contamination, use of unapproved fuels, coolants, lubricants, additives, fertilizers, water, or chemicals, etc.
- Failure or performance issues due to the use of fuels (e.g. gasoline, diesel, or biodiesel) that do not conform to their respective industry standards.
- Normal noise, vibration, wear and tear, and deterioration.
- Normal "wear and tear" includes, but is not limited to, damage to seats due to wear or abrasion, worn painted surfaces, scratched decals or windows, etc.

## Parts

Parts scheduled for replacement as required maintenance are warranted for the period of time up to the scheduled replacement time for that part. Parts replaced under this warranty are covered for the duration of the original product warranty and become the property of Toro. Toro will make the final decision whether to repair any existing part or assembly or replace it. Toro may use remanufactured parts for warranty repairs.

## Deep Cycle and Lithium-Ion Battery Warranty:

Deep cycle and Lithium-Ion batteries have a specified total number of kilowatt-hours they can deliver during their lifetime. Operating, recharging, and maintenance techniques can extend or reduce total battery life. As the batteries in this product are consumed, the amount of useful work between charging intervals will slowly decrease until the battery is completely worn out. Replacement of worn out batteries, due to normal consumption, is the responsibility of the product owner. Battery replacement may be required during the normal product warranty period at owner's expense. Note: (Lithium-Ion battery only): A Lithium-Ion battery has a part only prorated warranty beginning year 3 through year 5 based on the time in service and kilowatt hours used. Refer to the *Operator's Manual* for additional information.

## Maintenance is at Owner's Expense

Engine tune-up, lubrication, cleaning and polishing, replacement of filters, coolant, and completing recommended maintenance are some of the normal services Toro products require that are at the owner's expense.

## General Conditions

Repair by an Authorized Toro Distributor or Dealer is your sole remedy under this warranty.

**Neither The Toro Company nor Toro Warranty Company is liable for indirect, incidental or consequential damages in connection with the use of the Toro Products covered by this warranty, including any cost or expense of providing substitute equipment or service during reasonable periods of malfunction or non-use pending completion of repairs under this warranty. Except for the Emissions warranty referenced below, if applicable, there is no other express warranty. All implied warranties of merchantability and fitness for use are limited to the duration of this express warranty.**

Some states do not allow exclusions of incidental or consequential damages, or limitations on how long an implied warranty lasts, so the above exclusions and limitations may not apply to you. This warranty gives you specific legal rights, and you may also have other rights which vary from state to state.

## Note regarding engine warranty:

The Emissions Control System on your Product may be covered by a separate warranty meeting requirements established by the U.S. Environmental Protection Agency (EPA) and/or the California Air Resources Board (CARB). The hour limitations set forth above do not apply to the Emissions Control System Warranty. Refer to the Engine Emission Control Warranty Statement supplied with your product or contained in the engine manufacturer's documentation for details

## Countries Other than the United States or Canada

Customers who have purchased Toro products exported from the United States or Canada should contact their Toro Distributor (Dealer) to obtain guarantee policies for your country, province, or state. If for any reason you are dissatisfied with your Distributor's service or have difficulty obtaining guarantee information, contact the Toro importer.

374-0253 Rev D