Form No. 3425-449 Rev A

TORO®

Count on it.

Operator's Manual

GrandStand® Mower

With 48in or 52in TURBO FORCE® Cutting Unit

Model No. 74504—Serial No. 403253231 and Up
Model No. 74505—Serial No. 403281091 and Up
Model No. 79504—Serial No. 403290000 and Up
Model No. 79505—Serial No. 402885000 and Up

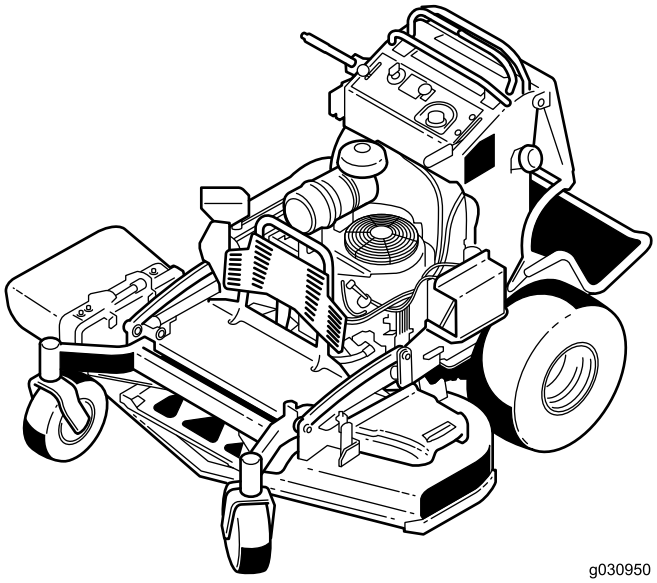

g030950

Register at www.Toro.com.
Original Instructions (EN)

3425-449 A

It is a violation of California Public Resource Code Section 4442 or 4443 to use or operate the engine on any forest-covered, brush-covered, or grass-covered land unless the engine is equipped with a spark arrester, as defined in Section 4442, maintained in effective working order or the engine is constructed, equipped, and maintained for the prevention of fire.

The enclosed engine owner's manual is supplied for information regarding the US Environmental Protection Agency (EPA) and the California Emission Control Regulation of emission systems, maintenance, and warranty. Replacements may be ordered through the engine manufacturer.

⚠ WARNING

CALIFORNIA
Proposition 65 Warning

The engine exhaust from this product contains chemicals known to the State of California to cause cancer, birth defects, or other reproductive harm.

Battery posts, terminals, and related accessories contain lead and lead compounds, chemicals known to the State of California to cause cancer and reproductive harm. Wash hands after handling.

Use of this product may cause exposure to chemicals known to the State of California to cause cancer, birth defects, or other reproductive harm.

Introduction

This rotary-blade, stand-on lawn mower is intended to be used by professional, hired operators. It is designed primarily for cutting grass on well-maintained lawns on residential or commercial properties. Using this product for purposes other than its intended use could prove dangerous to you and bystanders.

Read this information carefully to learn how to operate and maintain your product properly and to avoid injury and product damage. You are responsible for operating the product properly and safely.

Visit www.Toro.com for more information, including safety tips, training materials, accessory information, help finding a dealer, or to register your product.

Whenever you need service, genuine Toro parts, or additional information, contact an Authorized Service Dealer or Toro Customer Service and have the model and serial numbers of your product ready. Figure 1 identifies the location of the model and serial numbers on the product. Write the numbers in the space provided.

Important: **With your mobile device, you can scan the QR code on the serial number decal (if equipped) to access warranty, parts, and other product information.**

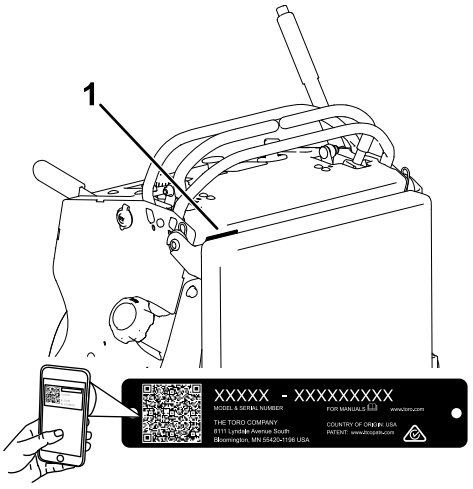

g235457

Figure 1

1. Location of the model and serial numbers

Model No. _____

Serial No. _____

This manual identifies potential hazards and has safety messages identified by the safety-alert symbol (Figure 2), which signals a hazard that may cause serious injury or death if you do not follow the recommended precautions.



g000502

Figure 2

1. Safety-alert symbol

This manual uses 2 words to highlight information. **Important** calls attention to special mechanical information and **Note** emphasizes general information worthy of special attention.

© 2018—The Toro® Company
8111 Lyndale Avenue South
Bloomington, MN 55420

Contact us at www.Toro.com.
Printed in the USA
All Rights Reserved

Contents

Safety 4
General Safety 4
Safety and Instructional Decals 4
Product Overview 8
Controls 8
Specifications 9
Attachments/Accessories 9
Before Operation 10
Before Operation Safety 10
Adding Fuel 10
Performing Daily Maintenance 11
Breaking in a New Machine 11
Using the Safety-Interlock System 11
During Operation 12
During Operation Safety 12
Operating the Parking Brake 13
Operating the Mower-Blade-Control Switch (PTO) 14
Operating the Throttle 14
Operating the Choke 14
Operating the Ignition Switch 15
Starting the Engine 15
Shutting Off the Engine 16
Operating the Platform 16
Driving Forward or Backward 17
Side Discharging or Mulching the Grass 18
Adjusting the Height-of-Cut 19
Adjusting the Flow Baffle 19
Positioning the Flow Baffle 19
Using Weights 20
After Operation 21
After Operation Safety 21
Using the Fuel-Shutoff Valve 21
Pushing the Machine by Hand 22
Transporting the Machine 22
Maintenance 24
Maintenance Safety 24
Recommended Maintenance Schedule(s) 24
Pre-Maintenance Procedures 25
Releasing the Cushion for Rear Access 25
Lubrication 26
Greasing the Machine 26
Greasing the Torsion Idler 26
Greasing the Front Caster Pivots 26
Greasing the Caster-Wheel Hubs 26
Greasing the Motion Controls 27
Engine Maintenance 28
Engine Safety 28
Servicing the Air Cleaner 28
Servicing the Engine Oil 29
Servicing the Spark Plug 31
Checking the Spark Arrester 32
Fuel System Maintenance 32
Draining the Fuel Tank 32
Removing the Fuel Tank 33
Replacing the Fuel Filter 33
Electrical System Maintenance 34
Electrical System Safety 34
Servicing the Battery 34
Servicing the Fuses 36
Drive System Maintenance 36
Adjusting the Tracking 36
Checking the Tire Pressure 37
Adjusting the Caster-Pivot Bearing 37
Servicing the Caster Wheels and Bearings 37
Removing the Clutch Shim 38
Checking the Wheel-Lug Nuts 40
Cooling System Maintenance 40
Cleaning the Air-Intake Screen 40
Cleaning the Cooling System 40
Brake Maintenance 41
Testing the Parking Brake 41
Adjusting the Brakes 41
Belt Maintenance 41
Checking the Belts 41
Replacing the Mower-Deck Belt 41
Replacing the Transmission Belt 42
Controls System Maintenance 43
Adjusting the Motion-Control Levers 43
Hydraulic System Maintenance 44
Hydraulic System Safety 44
Hydraulic System Specifications 44
Checking the Hydraulic Fluid 44
Replacing the Hydraulic Fluid and Filters 45
Bleeding the Hydraulic System 46
Mower Deck Maintenance 46
Servicing the Cutting Blades 46
Leveling the Mower Deck 48
Adjusting the Deck-Lift Spring 51
Replacing the Grass Deflector 51
Cleaning 52
Cleaning under the Mower Deck 52
Disposing of Waste 52
Storage 52
Storage Safety 52
Cleaning and Storage 52
Troubleshooting 54
Schematics 56

Safety

This machine has been designed in accordance with ANSI B71.4-2017.

General Safety

This product is capable of amputating hands and feet and of throwing objects. Always follow all safety instructions to avoid serious personal injury.

- Read and understand the contents of this *Operator's Manual* before starting the engine.
- Do not put your hands or feet near moving components of the machine.
- Do not operate the machine without all guards and other safety protective devices in place and functioning properly on the machine.
- Keep clear of the discharge opening.
- Keep bystanders and children out of the operating area. Do not allow children to operate the machine. Allow only people who are responsible, trained, familiar with the instructions, and physically capable to operate the machine.
- Stop the machine, shut off the engine, and remove the ignition key before servicing, fueling, or unclogging the machine.

Improperly using or maintaining this machine can result in injury. To reduce the potential for injury, comply with these safety instructions and always pay attention to the safety-alert symbol ⚠, which means Caution, Warning, or Danger—personal safety instruction. Failure to comply with these instructions may result in personal injury or death.

Safety and Instructional Decals

Safety decals and instructions are easily visible to the operator and are located near any area of potential danger. Replace any decal that is damaged or missing.



decalbatterysymbols

Battery Symbols

Some or all of these symbols are on your battery.

1. Explosion hazard
2. No fire, open flames, or smoking
3. Caustic liquid/chemical burn hazard
4. Wear eye protection.
5. Read the *Operator's Manual*.
6. Keep bystanders away.
7. Wear eye protection—explosive gases can cause blindness and other injuries.
8. Battery acid can cause severe burns.
9. Flush eyes immediately with water and get medical help fast.
10. Contains lead; do not discard.

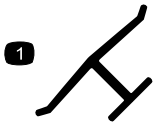

decaloemmarkt

Manufacturer's Mark

1. This mark indicates that the blade is identified as a part from the original machine manufacturer.

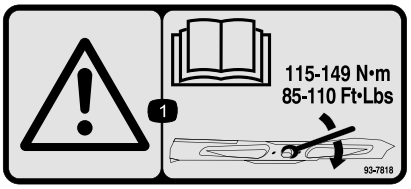

decal93-7818

93-7818

1. Warning—read the *Operator's Manual* for instructions on torquing the blade bolt/nut to 115 to 149 N·m (85 to 110 ft-lb).



decal106-5517

106-5517

1. Warning—do not touch the hot surface.

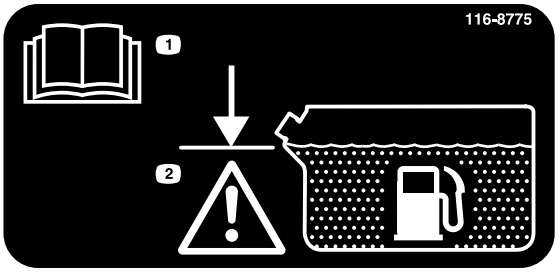

decal116-8775

116-8775

1. Read the *Operator's Manual.*
2. Warning—fill to the bottom of the filler neck; do not overfill the tank.

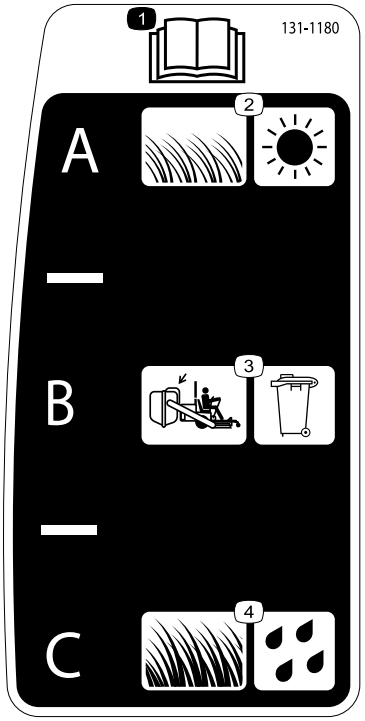

decal131-1180

131-1180

1. Read the *Operator's Manual*.
2. Short, light grass; dry conditions
3. Bagging setting
4. Tall, dense grass; wet conditions

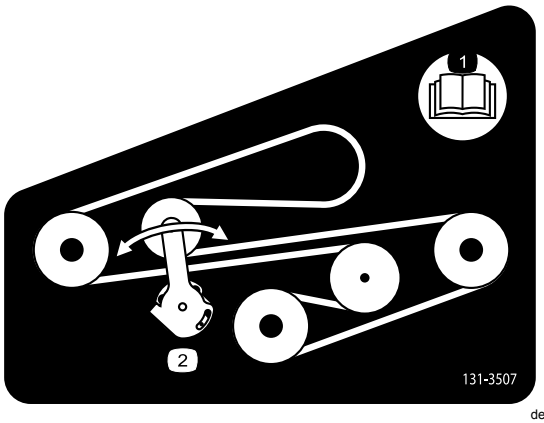

decal131-3507

131-3507

1. Read the *Operator's Manual*.
2. Belt tensioner

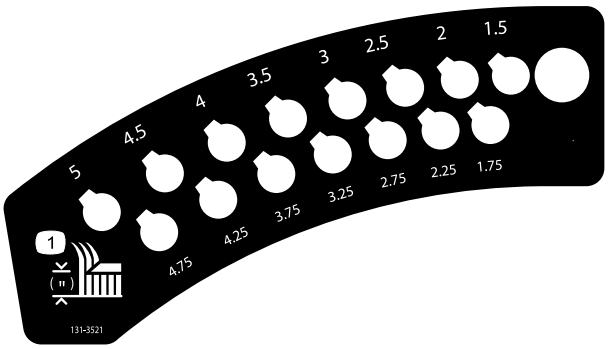

decal131-3521

131-3521

1. Height of cut

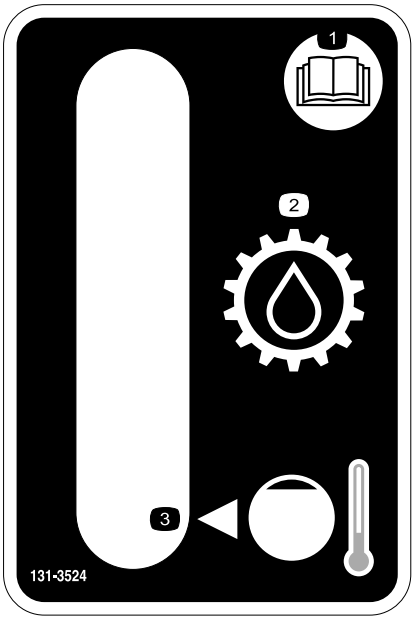

decal131-3524

131-3524

1. Read the *Operator's Manual*.
2. Transmission fluid
3. Fluid level

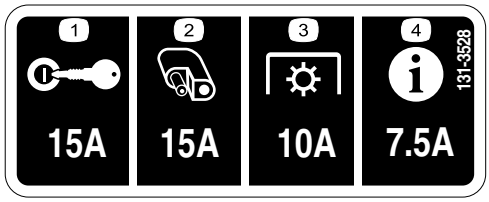

decal131-3528

131-3528

1. Key switch—15 A
2. Accessory port—15 A
3. Power takeoff (PTO)—10 A
4. Infocenter—7.5 A

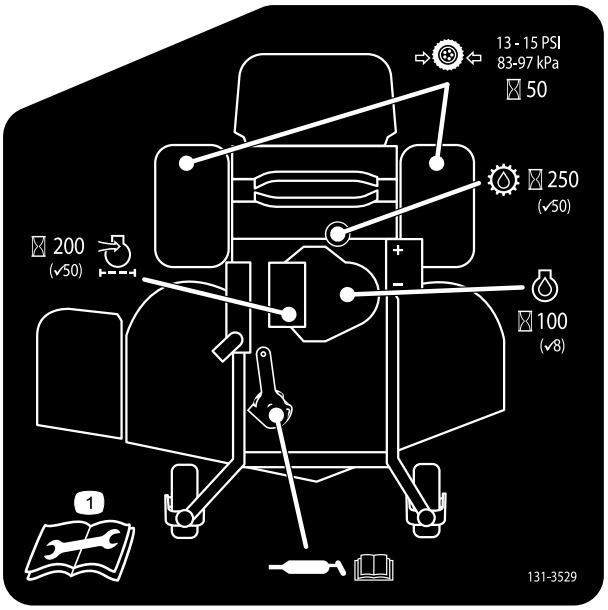

decal131-3529

131-3529

1. Read the *Operator's Manual* for more information on maintenance intervals and procedures.

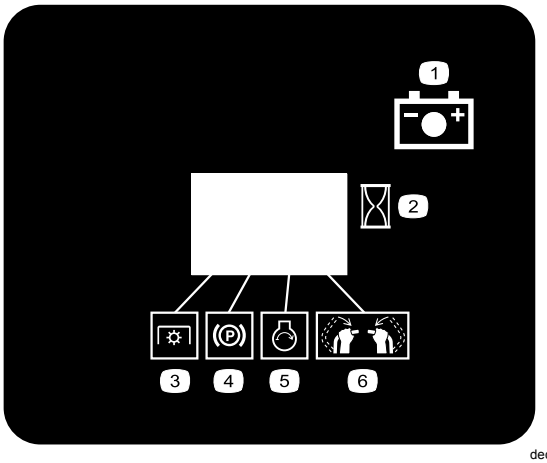

decal131-3536

131-3536

1. Battery
2. Time
3. Power takeoff (PTO)
4. Parking brake
5. Engine—start
6. Engage the handle bars.

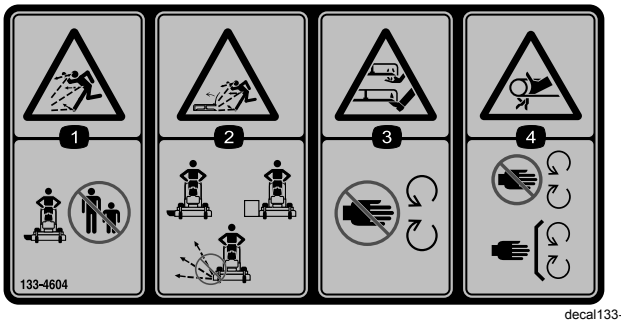

decal133-4604

133-4604

1. Thrown object hazard—keep bystanders away from the machine.
2. Thrown object hazard, open baffle—only operate the machine with a baffle or a grass collector.
3. Severing hazard of hand or foot—keep away from moving parts.
4. Entanglement hazard—keep away from moving parts; keep all guards and shields in place.

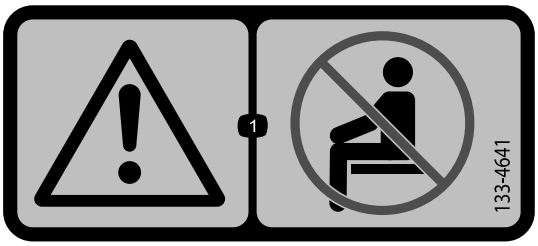

decal133-4641

133-4641

1. Warning—do not carry any passengers.



decal133-8062

133-8062

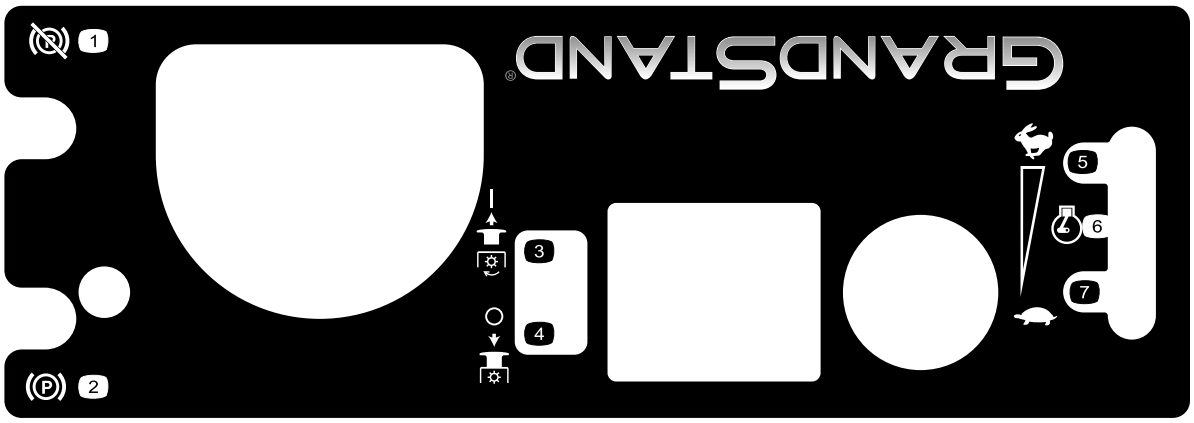

decal131-3525

131-3525

1. Disengage the parking brake.
2. Engage the parking brake.
3. Engage the PTO.
4. Disengage the PTO.
5. Fast
6. Engine—speed
7. Slow

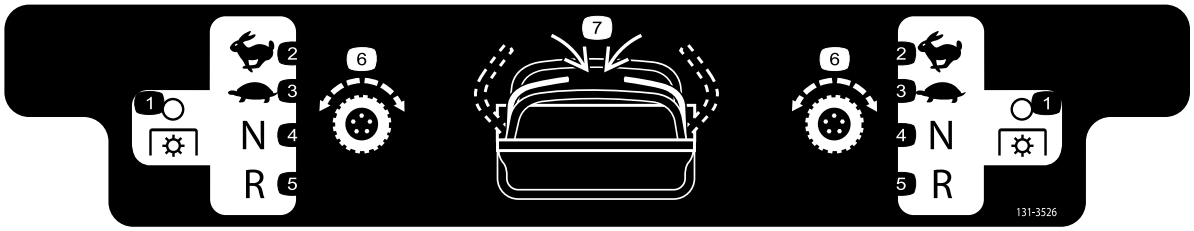

decal131-3526

131-3526

1. Power takeoff (PTO)—disengaged
2. Fast
3. Slow
4. Neutral
5. Reverse
6. Traction drive
7. Engage the handles.

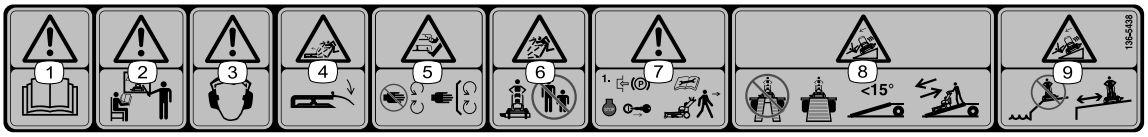

decal136-5438

136-5438

1. Warning—read the *Operator's Manual*.
2. Warning—receive training before operating the machine.
3. Warning—hearing protection must be worn.
4. Thrown object hazard—keep the deflector lowered during operation.
5. Cutting/severing hazard of hand or foot—keep away from moving parts; keep all guards and shields in place.
6. Thrown object hazard—keep bystanders away from the machine.
7. Warning—engage the parking brake, shut off the engine, and remove the key from the switch before leaving the machine.
8. Ramp hazard—do not use dual ramps when loading onto a trailer; use 1 ramp wide enough for the machine; use a ramp with a slope less than 15°; back up the ramp when loading the machine and drive forward off the ramp when unloading.
9. Tipping hazard—do not operate near drop-offs or near water.

Product Overview

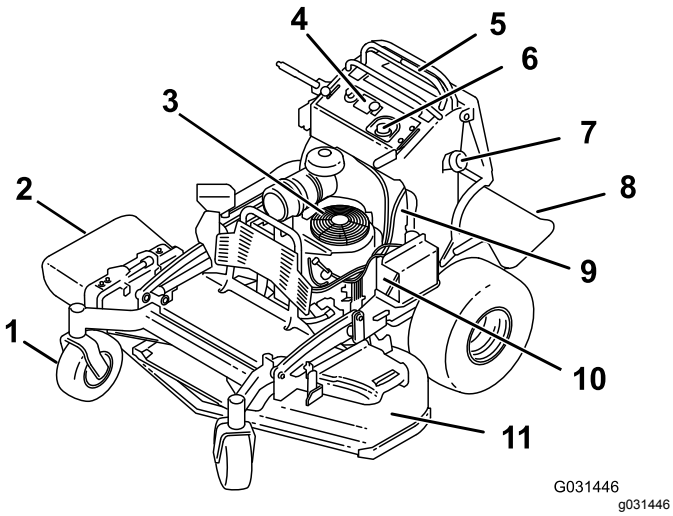

Figure 3

1. Front caster wheel
2. Side-discharge chute
3. Engine
4. Control panel
5. Motion-control levers
6. Hydraulic tank
7. Fuel tank
8. Platform (down position)
9. Fuel-shutoff valve
10. Battery
11. Mower deck

Controls

Become familiar with all the controls (Figure 4) before you start the engine and operate the machine.

Control Panel

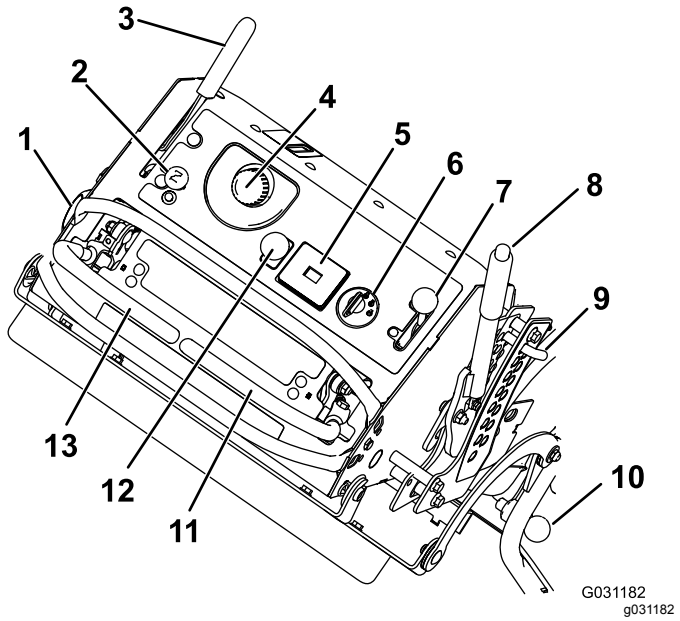

Figure 4

1. Fuel cap
2. Choke control
3. Parking-brake lever
4. Hydraulic-tank cap
5. Hour meter
6. Key switch
7. Throttle control
8. Height-of-cut lever
9. Height-of-cut pin
10. Platform latch
11. Right motion-control lever
12. Power-takeoff switch (PTO)
13. Left motion-control lever

Power-Takeoff Switch (PTO)

Use the power-takeoff switch (PTO) to engage and disengage mower blades or start and stop powered attachments (Figure 4); refer to Operating the Mower-Blade-Control Switch (PTO) (page 14).

Throttle Control

The throttle controls the engine speed, and it has a continuous-variable setting from the SLOW to FAST position (Figure 4).

Hour Meter

The hour meter records the number of hours the engine has operated. It operates when the engine

is running. Use these times for scheduling regular maintenance (Figure 5).

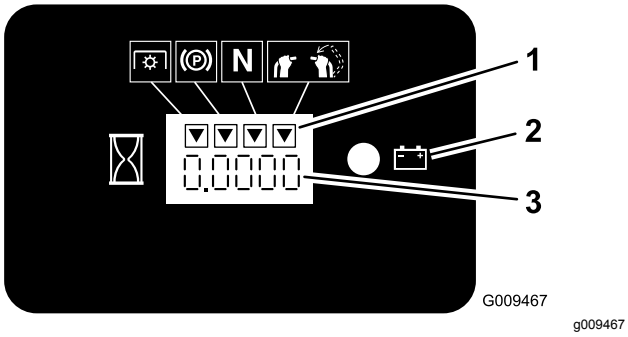

Figure 5

1. Safety-interlock symbols
2. Battery light
3. Hour meter

Safety-Interlock Indicators

Symbols on the hour meter indicate with a black triangle that the interlock component is in the correct position (Figure 5).

Battery-Indicator Light

If you turn the key to the ON position for a few seconds, the battery voltage displays in the area where the hours are normally displayed.

The battery light turns on when you turn the key to the ON position and when the charge is below the correct operating level (Figure 5).

Choke Control

Use the choke control to start a cold engine. Pull the choke control up to engage it. Push down on the choke control to disengage it.

Key Switch

The key switch, used to start and shut off the engine, has 3 positions: OFF, RUN, and START. Refer to Operating the Ignition Switch (page 15).

Motion-Control Levers

Use the motion-control levers to drive the machine forward, reverse, and turn either direction (Figure 4).

Fuel-Shutoff Valve

Close the fuel-shutoff valve when transporting or storing the machine; refer to Using the Fuel-Shutoff Valve (page 21).

Specifications

Note: Specifications and design are subject to change without notice.

	48in Mower Deck	52in Mower Deck
Cutting width	122 cm (48 inches)	131 cm (52 inches)
Width with deflector down	163 cm (64 inches)	173 cm (68 inches)
Width with deflector raised	127 cm (50 inches)	137 cm (54 inches)
Length with platform down	191 cm (75 inches)	191 cm (75 inches)
Length with platform up	155 cm (61 inches)	155 cm (61 inches)
Height	122 cm (48 inches)	122 cm (48 inches)
Weight	408 kg (899 lb)	412 kg (908 lb)

Attachments/Accessories

A selection of Toro approved attachments and accessories is available for use with the machine to enhance and expand its capabilities. Contact your Authorized Service Dealer or authorized Toro distributor or go to www.Toro.com for a list of all approved attachments and accessories.

To ensure optimum performance and continued safety certification of the machine, use only genuine Toro replacement parts and accessories. Replacement parts and accessories made by other manufacturers could be dangerous, and such use could void the product warranty.

Operation

Before Operation

Before Operation Safety

General Safety

- Never allow children or untrained people to operate the machine. Local regulations may restrict the age of the operator. The owner is responsible for training all operators and mechanics.
- Become familiar with the safe operation of the equipment, operator controls, and safety signs.
- Know how to stop the machine and shut off the engine quickly.
- Check that operator-presence controls, safety switches, and guards are attached and functioning properly. Do not operate the machine unless they are functioning properly.
- Before mowing, always inspect the machine to ensure that the blades, blade bolts, and cutting assemblies are in good working condition.
- Inspect the area where you will use the machine and remove all objects that the machine could throw.
- Evaluate the terrain to determine the appropriate equipment and any attachments or accessories required to operate the machine properly and safely.

Fuel Safety

- Fuel is extremely flammable and highly explosive. A fire or explosion from fuel can burn you and others and can damage property.
  - To prevent a static charge from igniting the fuel, place the container and/or machine directly on the ground before filling, not in a vehicle or on an object.
  - Fill the fuel tank outdoors, in an open area, when the engine is cold. Wipe up any fuel that spills.
  - Do not handle fuel when smoking or around an open flame or sparks.
  - Do not remove the fuel cap or add fuel to the tank while the engine is running or hot.
  - If you spill fuel, do not attempt to start the engine. Avoid creating a source of ignition until the fuel vapors have dissipated.
  - Store fuel in an approved container and keep it out of the reach of children.
- Fuel is harmful or fatal if swallowed. Long-term exposure to vapors can cause serious injury and illness.
  - Avoid prolonged breathing of vapors.
  - Keep your hands and face away from the nozzle and the fuel-tank opening.
  - Keep fuel away from your eyes and skin.
- Do not store the machine or fuel container where there is an open flame, spark, or pilot light, such as on a water heater or on other appliances.
- Do not fill containers inside a vehicle or on a truck or trailer bed with a plastic liner. Always place containers on the ground, away from your vehicle before filling.
- Remove the equipment from the truck or trailer and refuel it while it is on the ground. If this is not possible, then refuel from a portable container rather than a fuel-dispenser nozzle.
- Do not operate the machine without the entire exhaust system in place and in proper working condition.
- Keep the fuel-dispenser nozzle in contact with the rim of the fuel tank or container opening at all times until fueling is complete. Do not use a nozzle lock-open device.
- If you spill fuel on your clothing, change your clothing immediately. Wipe up any fuel that spills.
- Never overfill the fuel tank. Replace the fuel cap and tighten it securely.

Adding Fuel

- For best results, use only clean, fresh (less than 30 days old), unleaded gasoline with an octane rating of 87 or higher ((R+M)/2 rating method).
- **Ethanol**: Gasoline with up to 10% ethanol (gasohol) or 15% MTBE (methyl tertiary butyl ether) by volume is acceptable. Ethanol and MTBE are not the same. Gasoline with 15% ethanol (E15) by volume is not approved for use. **Never use gasoline that contains more than 10% ethanol by volume**, such as E15 (contains 15% ethanol), E20 (contains 20% ethanol), or E85 (contains up to 85% ethanol). Using unapproved gasoline may cause performance problems and/or engine damage that may not be covered under warranty.
- **Do not** use gasoline containing methanol.
- **Do not** store fuel either in the fuel tank or fuel containers over the winter unless you use a fuel stabilizer.
- **Do not** add oil to gasoline.

Using Stabilizer/Conditioner

Use fuel stabilizer/conditioner in the machine to keep the fuel fresh longer when used as directed by the fuel-stabilizer manufacturer.

Important: **Do not use fuel additives containing methanol or ethanol.**

Add the amount of fuel stabilizer/conditioner to fresh fuel as directed by the fuel-stabilizer manufacturer.

Filling the Fuel Tank

1. Park the machine on a level surface, disengage the PTO, move the motion-control levers to the NEUTRAL-LOCK position, and engage the parking brake.
2. Shut off the engine, remove the key, and wait for all moving parts to stop before leaving the operating position.
3. Clean around the fuel-tank cap and remove the cap.
4. Fill the fuel tank to the bottom of the filler neck.

   Note: Do not fill the fuel tank completely full. The empty space in the tank allows the fuel to expand.
5. Install the fuel-tank cap securely. Wipe up any spilled fuel.

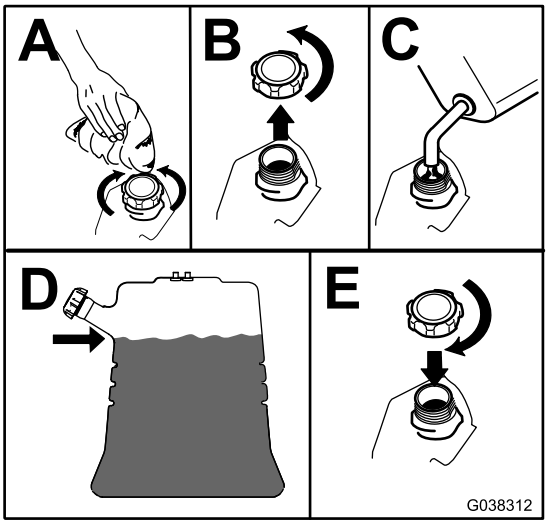

g038312

Figure 6

Performing Daily Maintenance

Before starting the machine each day, perform the Each Use/Daily procedures listed in Maintenance (page 24).

Breaking in a New Machine

New engines take time to develop full power. Mower decks and drive systems have higher friction when new, placing additional load on the engine. Allow 40 to 50 hours of break-in time for new machines to develop full power and best performance.

Using the Safety-Interlock System

⚠ WARNING

If safety-interlock switches are disconnected or damaged, the machine could operate unexpectedly, causing personal injury.

- **Do not tamper with the interlock switches.**
- **Check the operation of the interlock switches daily, and replace any damaged switches before operating the machine.**

Understanding the Safety-Interlock System

The safety-interlock system is designed to prevent PTO from engaging unless you do 1 of the following:

- Move either motion-control lever to the center, unlocked position.
- Pull the PTO switch to the ON position.

  The safety-interlock system is designed to stop the blades/attachment if you move or release both motion-control levers into the NEUTRAL-LOCK position.

  The hour meter has symbols to notify the user when each interlock component is in the correct position. When the component is in the correct position, a triangle lights up in the corresponding square (Figure 7).

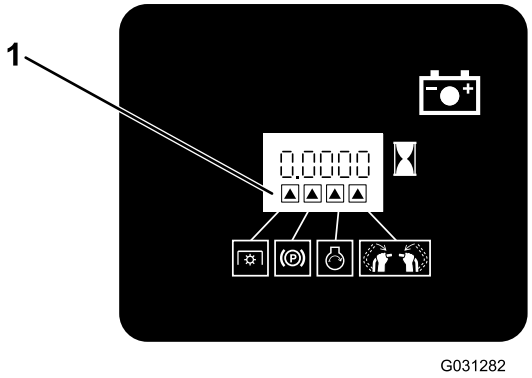

g031282

Figure 7

1. The triangles light up when the interlock components are in the correct position.

Testing the Safety-Interlock System

Service Interval: Before each use or daily

Test the safety-interlock system before you use the machine each time.

Note: If the safety system does not operate as described below, have an Authorized Service Dealer repair the safety system immediately.

1. Start the engine; refer to Operating the Ignition Switch (page 15).
2. Move the motion-control levers to the center, unlocked position.

   Note: The blades/attachment should stop and the engine should stop running.
3. Start the engine and disengage the parking brake.
4. Move either motion-control lever to the center, unlocked position.
5. Continue holding the motion-control lever in the center, unlocked position, pull up on the PTO switch, and release the switch.

   Note: The clutch and blades/attachment should engage.
6. Move or release the motion-control levers into the NEUTRAL-LOCK position.

   Note: The blades/attachment should stop and the engine should continue to run.
7. Push the PTO switch down and move either motion-control lever to the center, unlocked position.
8. Continue holding the motion-control lever in the center, unlocked position, pull up on the PTO switch, and release the switch.

   Note: The clutch and blades/attachment should engage.
9. Push the PTO switch down to the OFF position.

   Note: The blades/attachment should stop.
10. With the engine running, pull up the PTO switch and release it without holding either motion-control lever to the center, unlocked position.

    Note: The blades/attachment should not engage.

During Operation

During Operation Safety

General Safety

- The owner/operator can prevent and is responsible for accidents that may cause personal injury or property damage.
- Wear appropriate clothing, including eye protection; long pants; substantial, slip-resistant footwear; and hearing protection. Tie back long hair and do not wear loose clothing or loose jewelry.
- Use your full attention while operating the machine. Do not engage in any activity that causes distractions; otherwise, injury or property damage may occur.
- Do not operate the machine while ill, tired, or under the influence of alcohol or drugs.
- Never carry passengers on the machine and keep bystanders and pets away from the machine during operation.
- Operate the machine only in good visibility and appropriate weather conditions. Do not operate the machine when there is the risk of lightning.
- Wet grass or leaves can cause serious injury if you slip and contact the blade. Avoid mowing in wet conditions.
- Before you start the engine, ensure that all drives are in neutral, the parking brake is engaged, and you are in the operating position.
- Ensure that you have good footing while using this machine, especially when backing up.
- Keep your hands and feet away from the cutting units. Keep clear of the discharge opening at all times.
- Look behind and down before backing up to be sure of a clear path.
- Use extreme care when approaching blind corners, shrubs, trees, or other objects that may block your view.
- Stop the blades whenever you are not mowing.
- Stop the machine, remove the ignition key, and wait for all moving parts to stop before inspecting the mower deck or attachment after striking an object or if there is an abnormal vibration in the machine. Make all necessary repairs before resuming operation.
- Slow down and use caution when making turns and crossing roads and sidewalks with the machine. Always yield the right-of-way.

- Disengage the cutting unit and shut off the engine before adjusting the height of cut (unless you can adjust it from the operating position).
- Operate the engine only in well-ventilated areas. Exhaust gases contain carbon monoxide, which is lethal if inhaled.
- Never leave a running machine unattended.
- Before leaving the operating position (including to empty the catchers or to unclog the chute), do the following:
  - Park the machine on a level surface.
  - Disengage the power take-off.
  - Engage the parking brake.
  - Shut off the engine and remove the ignition key.
  - Wait for all moving parts to stop.
- Shut off the machine and disengage the drive to the cutting unit in the following situations:
  - Before fueling
  - Before clearing blockages
  - Before checking, cleaning, or maintaining the cutting unit
  - After striking a foreign object or if an abnormal vibration occurs. Inspect the cutting unit for damage and make repairs before starting and operating the machine
  - Before leaving the operating position
- Do not use the machine as a towing vehicle.
- Use only accessories and attachments approved by The Toro® Company.

Slope Safety

- Slopes are a major factor related to loss of control and rollover accidents, which can result in severe injury or death. You are responsible for safe slope operation. Operating the machine on any slope requires extra caution. Before using the machine on a slope, do the following:
  - Review and understand the slope instructions in the manual and on the machine.
  - Evaluate the site conditions of the day to determine if the slope is safe for machine operation. Use common sense and good judgment when performing this evaluation. Changes in the terrain, such as moisture, can quickly affect the operation of the machine on a slope.
- Operate across slopes, never up and down. Avoid operation on excessively steep or wet slopes.
- Identify hazards at the base of the slope. Do not operate the machine near drop-offs, ditches, embankments, water, or other hazards. The machine could suddenly roll over if a wheel goes over the edge or the edge collapses. Keep a safe distance (twice the width of the machine) between the machine and any hazard. Use a walk-behind machine or a handheld tool to operate in these areas.
- Avoid starting, stopping, or turning the machine on slopes. Avoid making sudden changes in speed or direction; turn slowly and gradually.
- Do not operate a machine under any conditions where traction, steering or stability is in question. Be aware that operating the machine on wet grass, across slopes or downhill may cause the machine to lose traction. Loss of traction to the drive wheels may result in sliding and a loss of braking and steering. The machine can slide even if the drive wheels are stopped.
- Remove or mark obstacles such as ditches, holes, ruts, bumps, rocks, or other hidden hazards. Tall grass can hide obstacles. Uneven terrain could overturn the machine.
- Use extra care while operating with accessories or attachments. These can change the stability of the machine and cause a loss of control. Follow directions for counterweights.
- If you lose control of the machine, step off and away from the direction of travel of the machine.

Operating the Parking Brake

Always engage the parking brake when you shut off the machine or leave it unattended. Before each use, check the parking brake for proper operation.

If the parking brake does not hold securely, adjust it; refer to Adjusting the Brakes (page 41).

Pull the parking-brake lever rearward to engage it (Figure 8).

Push the parking-brake lever forward to disengage it.

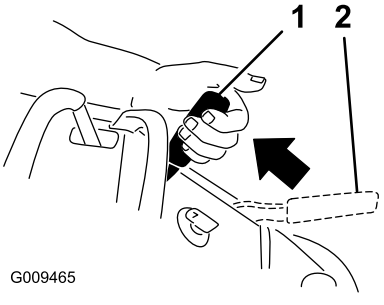

g009465

Figure 8

1. Parking brake—engaged
2. Parking brake—disengaged

Operating the Mower-Blade-Control Switch (PTO)

Use the blade-control switch (PTO) in conjunction with the motion-control levers to engage and disengage the mower blades.

Engaging the Mower Blades (PTO)

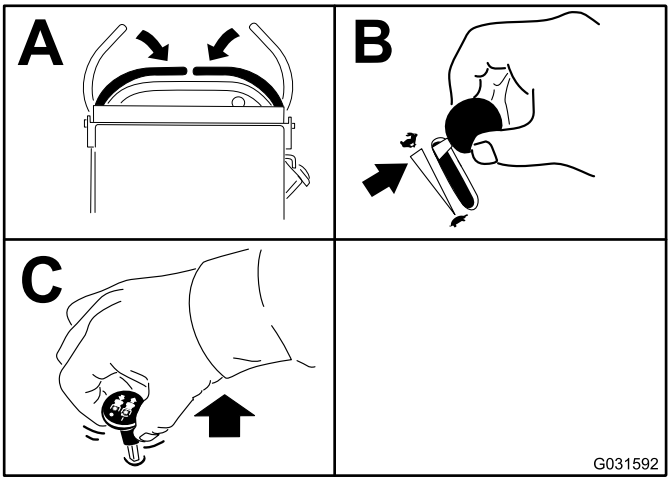

g031592

Figure 9

Disengaging the Mower Blades (PTO)

Figure 10 and Figure 11 show 2 ways to disengage the mower blades.

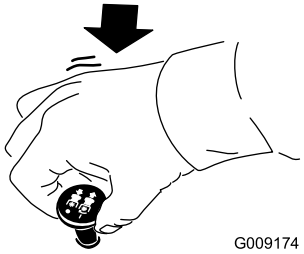

g009174

Figure 10

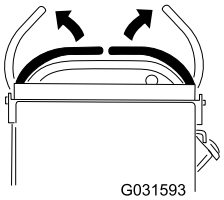

g031593

Figure 11

Operating the Throttle

You can move the throttle control between FAST and SLOW positions (Figure 12).

Always use the FAST position when engaging the PTO.

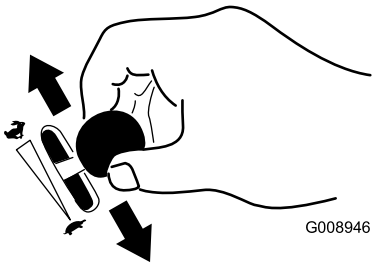

g008946

Figure 12

Operating the Choke

Use the choke to start a cold engine.

1. Pull up the choke knob to engage the choke before using the key switch (Figure 13).
2. Push down the choke knob to disengage the choke after the engine has started (Figure 13).

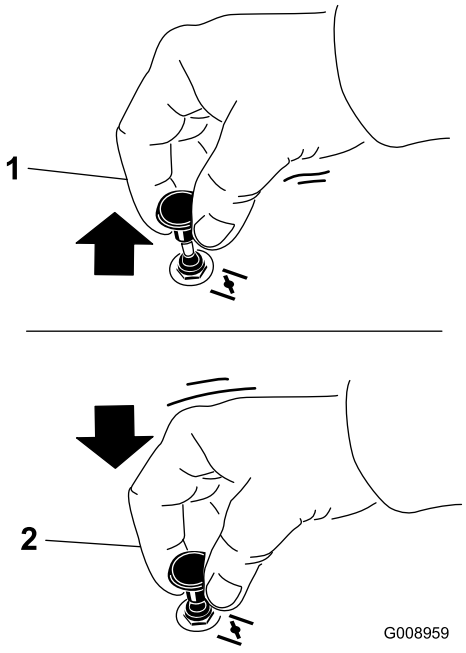

g008959

Figure 13

1. ON position
2. OFF position

Operating the Ignition Switch

Important: **Do not engage the starter for more than 5 seconds at a time. If the engine fails to start, wait 15 seconds between attempts. Failure to follow these instructions can burn out the starter motor.**

Note: You may need to repeat the cycle for starting the engine when you start it for the first time after you have filled a completely empty fuel system with fuel.

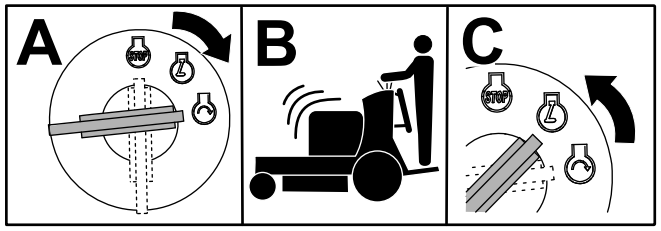

G031239
g031239

Figure 14

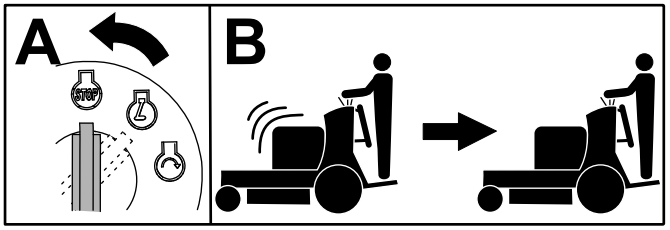

G031281
g031281

Figure 15

Starting the Engine

Important: **Do not engage the starter for more than 5 seconds at a time. If the engine fails to start, wait 15 seconds between attempts. Failure to follow these instructions can burn out the starter motor.**

Note: You may need to repeat the cycle for starting the engine when you start it for the first time after you have filled a completely empty fuel system with fuel.

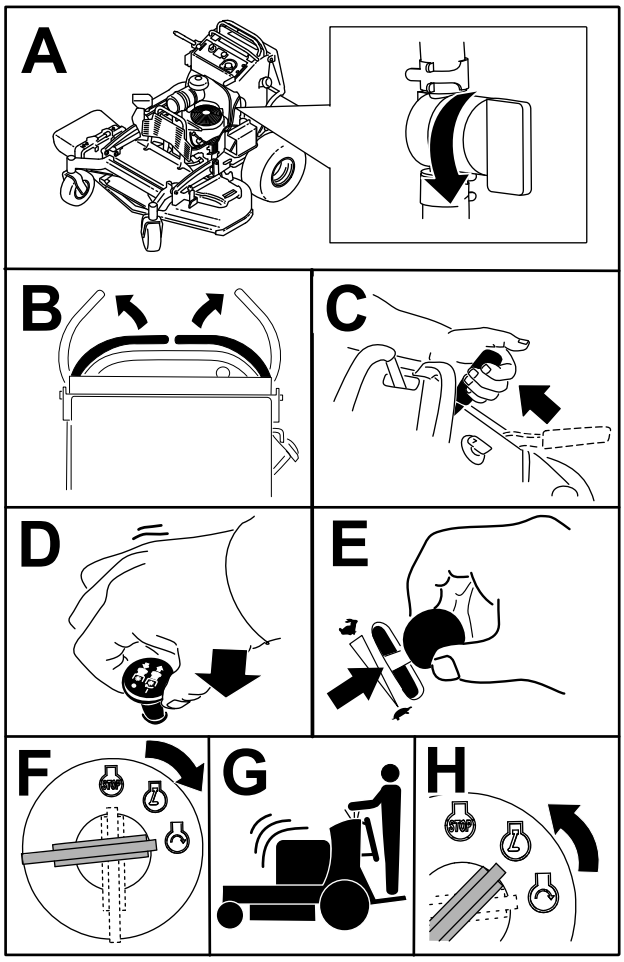

G030981
g030981

Figure 16

Shutting Off the Engine

⚠ CAUTION

Children or bystanders may be injured if they move or attempt to operate the machine while it is unattended.

Always remove the key and engage the parking brake when leaving the machine unattended.

Let the engine idle at slow throttle (turtle) for 60 seconds before turning the key switch to the OFF position.

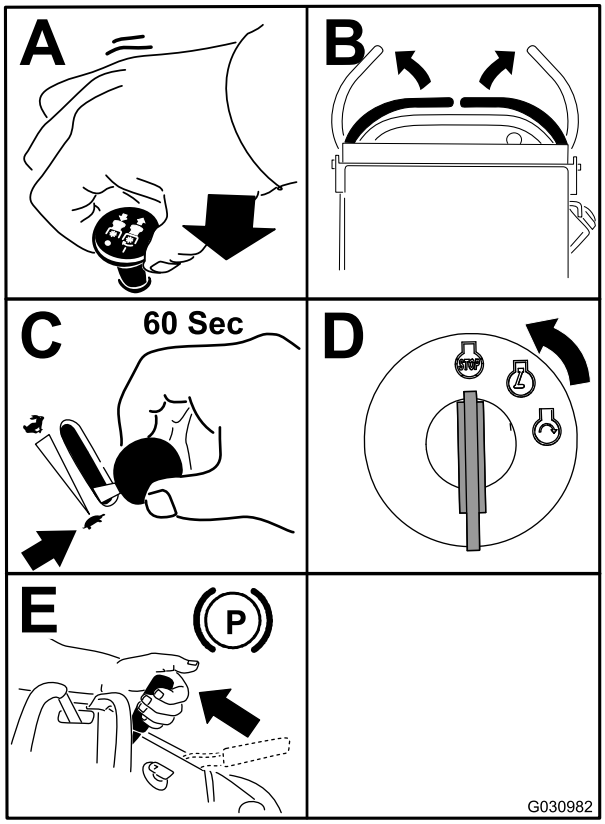

g030982

Figure 17

Important: **Make sure that the fuel-shutoff valve is closed before transporting or storing the machine to prevent a fuel leak. Before storing the machine, disconnect the spark plug(s) to prevent the possibility of accidental starting.**

Operating the Platform

You can use the machine with the platform in the up or down position. It is your preference on which position to use.

⚠ WARNING

The operator platform is heavy and may cause injury when you raise or lower it. Carefully lower or raise the operator platform, as suddenly dropping it could injure you.

- **Do not put your hands or fingers in the platform-pivot area when lowering or raising the operator platform.**
- **Make sure that the platform is supported when you pull the latch pin out.**
- **Make sure that the latch secures the platform when folding it up. Push it tight against the cushion for the latch pin to lock into place.**
- **Keep bystanders away from the machine when raising or lowering the platform.**

Operating the Machine with the Platform Up

Operate the machine with the platform up for the following conditions:

- Using the machine near drop-offs
- Using the machine in small areas where the machine is too large
- Areas with low-hanging branches or obstacles
- Loading the machine for transport
- Driving up slopes

To raise the platform, pull the back of the platform up so that the latch pin and knob lock it into place. Push it tight against the cushion for the latch pin to lock it into place.

Operating the Machine with the Platform Down

Operate the machine with the platform down for the following conditions:

- Using the machine in most areas
- Driving across slopes
- Driving down slopes

To lower the platform, push the platform forward against the cushion to release pressure on the latch pin, then pull the knob out and lower the platform (Figure 18).

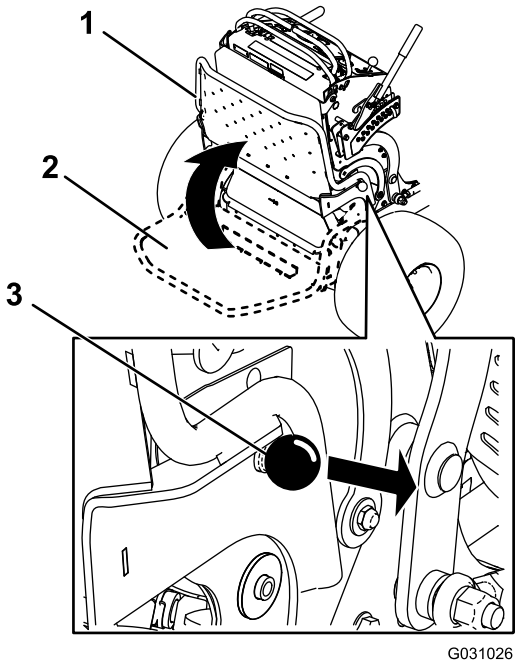

Figure 18

1. Platform up
2. Platform down
3. Pull the knob out to release the platform.

Driving Forward or Backward

The throttle control regulates the engine speed as measured in rpm (revolutions per minute). Place the throttle control in the FAST position for best performance.

Important: **Back the machine over curbs, 1 wheel at a time; driving it forward over curbs could damage the machine.**

⚠ CAUTION

The machine can spin very rapidly, and you may lose control of the machine, causing personal injury to you and damage to the machine.

Slow down the machine before making sharp turns.

Driving Forward

1. Disengage the parking brake; refer to Operating the Parking Brake (page 13).
2. Move the motion-control levers to the center, unlocked position.

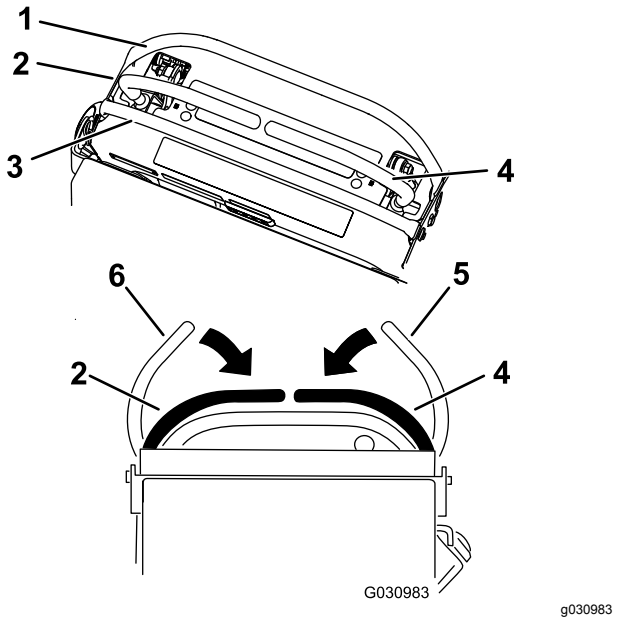

Figure 19

1. Front reference bar
2. Left control lever
3. Rear reference bar
4. Right control lever
5. Right control lever in the NEUTRAL-LOCK position
6. Left control lever in the NEUTRAL-LOCK position

3. Slowly push the motion-control levers forward (Figure 20).

   Note: The engine shuts off if you move a motion-control lever while the parking brake is engaged.

   Note: The farther you move the motion-control levers in either direction, the faster the machine moves in that direction.

   Note: To stop, pull the motion-control levers back to the NEUTRAL position.

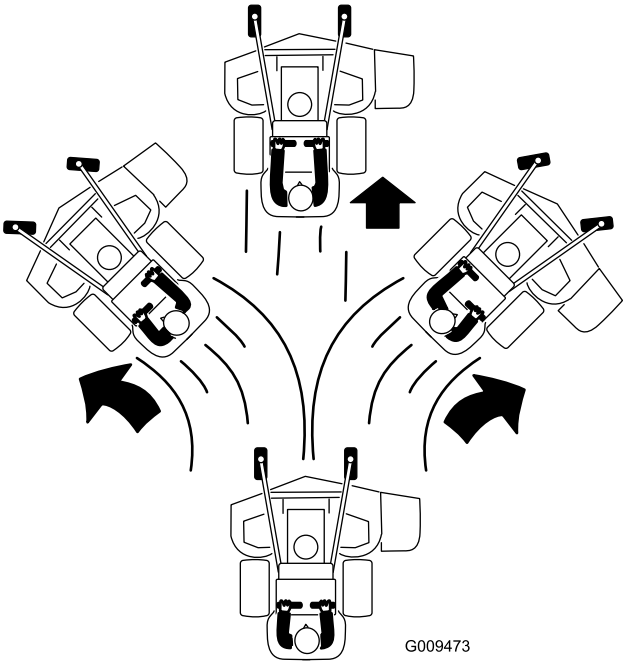

g009473

Figure 20

Driving Backward

1. Move both motion-control levers to the center, unlocked position.
2. Slowly pull the motion-control levers rearward (Figure 21).

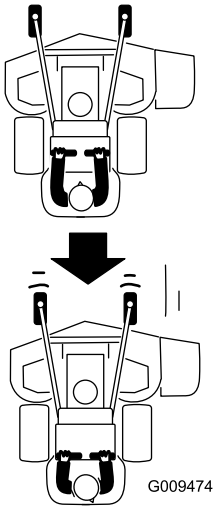

g009474

Figure 21

Side Discharging or Mulching the Grass

This machine has a hinged grass deflector that disperses clippings to the side and down toward the turf.

⚠ DANGER

Without the grass deflector, discharge cover, or complete grass catcher assembly mounted in place, you and others are exposed to blade contact and thrown debris. Contact with rotating mower blade(s) and thrown debris cause injury or death.

- **Do not remove the grass deflector from the machine, because the grass deflector routes material down toward the turf. If the grass deflector is ever damaged, replace it immediately.**
- **Never put your hands or feet under the machine.**
- **Never try to clear the discharge area or mower blades unless you release the bail and the power takeoff (PTO) is off. Rotate the key to the OFF position. Also remove the key and disconnect the wire(s) from the spark plug(s).**

Adjusting the Height-of-Cut

The height-of-cut can be adjusted from 38 to 127 mm (1-1/2 to 5 inches) in 6 mm (1/4 inch) increments.

Note: Using a height-of-cut under 51 mm (2 inches) increases the wear on the mower-deck belt. Use a height-of-cut that is greater than 51 mm (2 inches) whenever possible.

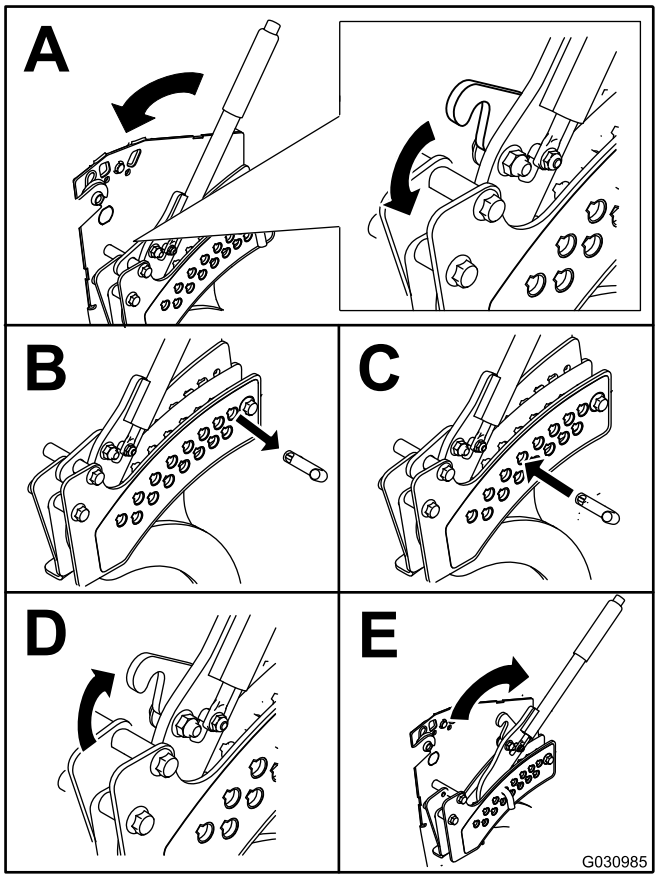

g030985

Figure 22

Adjusting the Flow Baffle

You can adjust the mower-discharge flow for different types of mowing conditions. Position the cam lock and baffle to provide the best quality of cut.

1. Disengage the PTO, move the motion-control levers to the NEUTRAL-LOCK position, and engage the parking brake.
2. Shut off the engine, remove the key, and wait for all moving parts to stop before leaving the operating position.
3. To adjust the baffle, loosen the nut (Figure 23).
4. Adjust the baffle and nut in the slot to the desired discharge flow and tighten the nut.

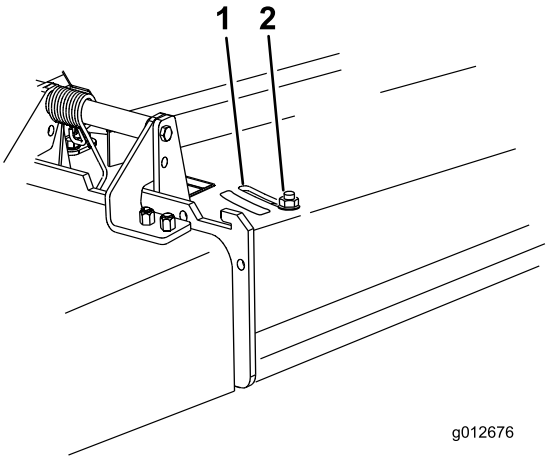

g012676

Figure 23

1. Slot
2. Nut

Positioning the Flow Baffle

The following figures are for recommended use only. Adjustments vary by grass type, moisture content, and the height of the grass.

Note: If the engine power draws down and the mower ground speed is the same, open the baffle.

Position A

This is the full, rear position (see Figure 24). Use this position for the following:

- In short, light grass mowing conditions
- In dry conditions
- Smaller grass clippings
- Propels grass clippings farther away from the mower

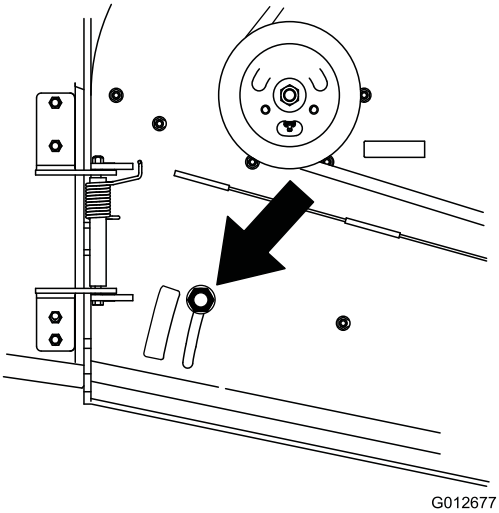

g012677

Figure 24

Position B

Use this position when bagging (Figure 25).

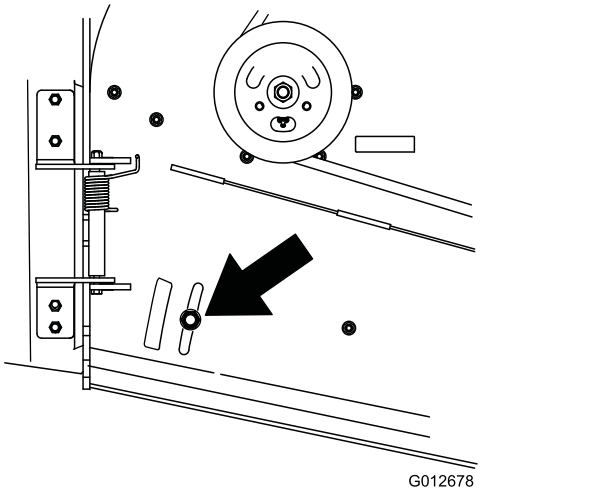

g012678

Figure 25

Position C

This is the full, open position (Figure 26). Use this position for the following:

- In tall, dense grass mowing conditions
- In wet conditions
- Lowers the engine-power consumption
- Allows increased ground speed in heavy conditions

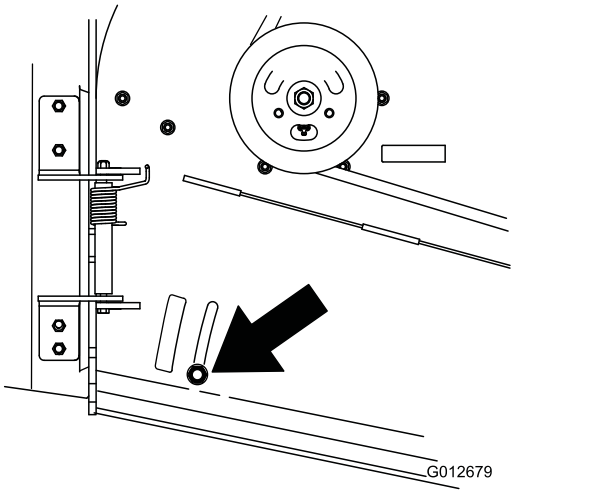

g012679

Figure 26

Using Weights

- Install weights to improve balance. You can add or remove weights to create optimized performance under different operating conditions and for your preference.
- Add or remove weights 1 at a time until you achieve the desired handling and balance.
- Refer to the *Operator's Manual* of attachments for recommended weights.

Note: Contact an Authorized Service Dealer to order a weight kit.

⚠ WARNING

Excessive weight changes can affect the handling and operation of the machine. This could cause serious injury to you or bystanders.

- **Make weight changes in small increments only.**
- **Evaluate the machine after each weight change to ensure that you can operate the machine safely.**

After Operation

After Operation Safety

General Safety

- Always shut off the machine, remove the ignition key, wait for all moving parts to stop, and allow the machine to cool before adjusting, servicing, cleaning, or storing it.
- Clean grass and debris from the cutting units, mufflers, and engine compartment to help prevent fires. Clean up oil or fuel spills.
- Shut off the fuel before storing or transporting the machine.
- Disengage the PTO whenever you are transporting or not using the machine.
- Never store the machine or fuel container where there is an open flame, spark, or pilot light, such as on a water heater or on other appliances.
- Use full-width ramps for loading the machine into a trailer or truck.
- Tie the machine down securely using straps, chains, cable, or ropes. Both front and rear straps should be directed down and outward from the machine.

Using the Fuel-Shutoff Valve

Close the fuel-shutoff valve for transport, maintenance, and storage (Figure 27).

Ensure that the fuel-shutoff valve is open when starting the engine.

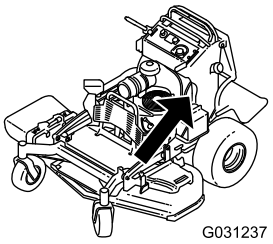

g031237

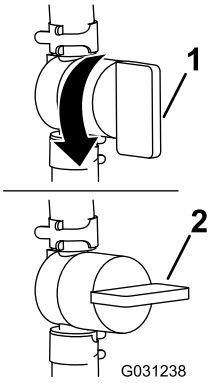

g031238

Figure 27

1. ON position
2. OFF position

Pushing the Machine by Hand

The bypass valves allow you to push the machine by hand without the engine running.

Important: **Always push the machine by hand. Do not tow the machine, because hydraulic damage may occur.**

Important: **Do not start or operate the machine with the bypass valves open. Damage to system may occur.**

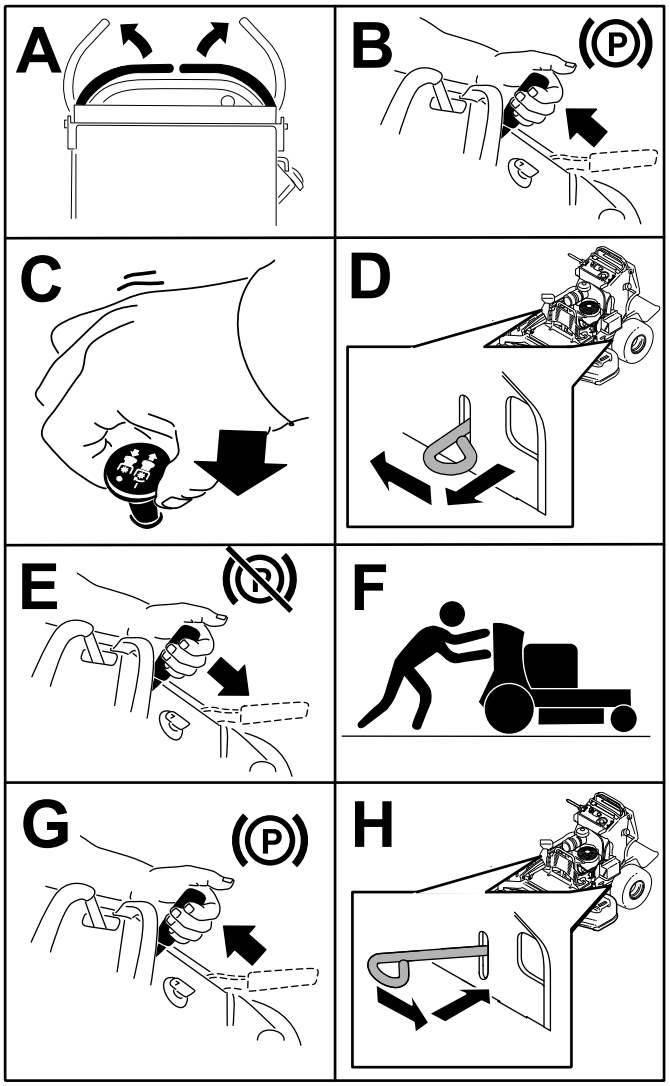

Figure 28

Transporting the Machine

Use a heavy-duty trailer or truck to transport the machine. Use a full-width ramp. Ensure that the trailer or truck has all the necessary brakes, lighting, and marking as required by law. Please carefully read all the safety instructions. Knowing this information could help you or bystanders avoid injury. Refer to your local ordinances for trailer and tie-down requirements.

⚠ WARNING

Driving on the street or roadway without turn signals, lights, reflective markings, or a slow-moving-vehicle emblem is dangerous and can lead to accidents, causing personal injury.

Do not drive the machine on a public street or roadway.

Selecting a Trailer

⚠ WARNING

Loading a machine onto a trailer or truck increases the possibility of tip-over and could cause serious injury or death (Figure 29).

- **Use only a full-width ramp; do not use individual ramps for each side of the machine.**
- **Ensure that the length of ramp is at least 4 times as long as the height of the trailer or truck bed to the ground.**

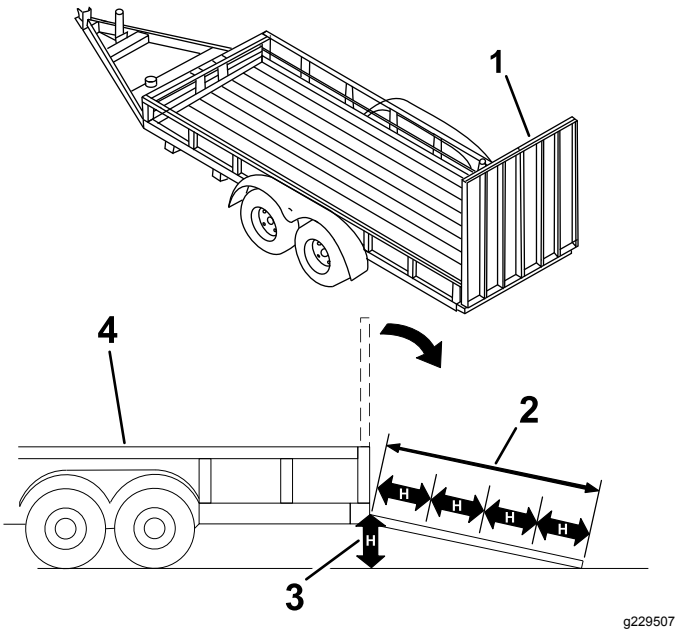

Figure 29

1. Full-width ramp in stowed position
2. Ramp is at least 4 times as long as the height of the trailer or truck bed to the ground
3. H=height of the trailer or truck bed to the ground
4. Trailer

Loading the Machine

⚠ WARNING

Loading a machine onto a trailer or truck increases the possibility of tip-over and could cause serious injury or death.

- **Use extreme caution when operating a machine on a ramp.**
- **Back the machine up the ramp and walk it forward down the ramp.**
- **Avoid sudden acceleration or deceleration while driving the machine on a ramp as this could cause a loss of control or a tip-over situation.**

1. If using a trailer, connect it to the towing vehicle and connect the safety chains.
2. If applicable, connect the trailer brakes and lights.
3. Lower the ramp (Figure 29).
4. Raise the platform.

   Important: **Always keep the platform up when loading and unloading the machine.**
5. Back the machine up the ramp (Figure 30).

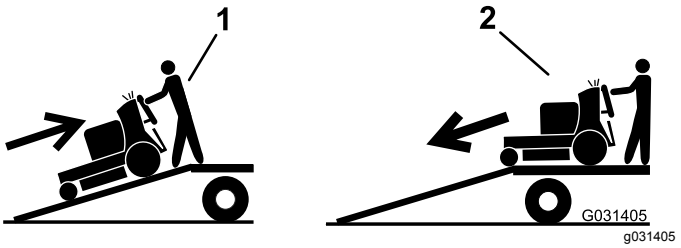

Figure 30

1. Back the machine up the ramp.
2. Walk the machine down the ramp.

6. Shut off the engine, remove the key, and engage the parking brake.
7. Tie down the machine near the front caster wheels and the rear bumper with straps, chains, cable, or ropes (Figure 31). Refer to local regulations for tie-down requirements.

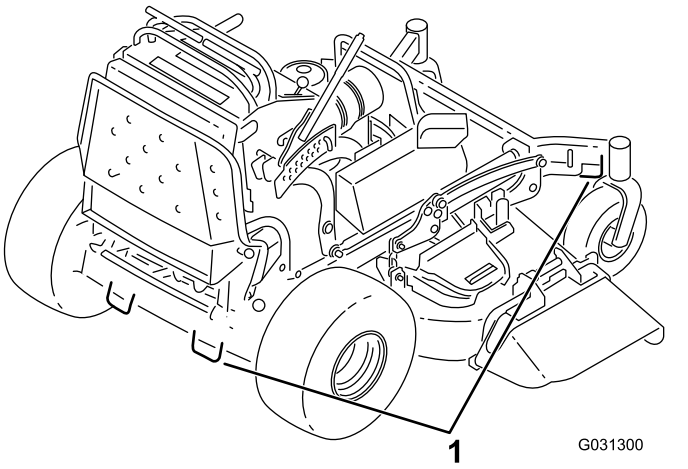

Figure 31

1. Tie-down loops

Maintenance

Note: Determine the left and right sides of the machine from the normal operating position.

⚠ CAUTION

If you leave the key in the ignition switch, someone could accidently start the engine and seriously injure you or other bystanders.

Remove the key from the ignition and disconnect the spark-plug wires from the spark plugs before you do any maintenance. Set the wires aside so that they do not accidentally contact the spark plugs.

Maintenance Safety

- Before adjusting, cleaning, servicing, or leaving the machine, do the following:
  - Park the machine on a level surface.
  - Disengage the drives.
  - Engage the parking brake.
  - Shut off the engine and remove the ignition key.
  - Wait for all moving parts to stop.
  - Allow machine components to cool before performing maintenance.
- Do not allow untrained personnel to service the machine.
- Keep your hands and feet away from moving parts. If possible, do not make adjustments with the engine running.
- Carefully release pressure from components with stored energy.
- Check the parking brake operation frequently. Adjust and service the brake as needed.
- Never tamper with safety devices. Check their proper operation regularly.
- Clean grass and debris from the cutting unit, drives, muffler, and engine to help prevent fires. Clean up oil or fuel spills.
- Check the grass catcher components frequently and replace them when they are worn or damaged.
- Do not rely on a hydraulic system to support the machine; support the machine with jack stands whenever you raise the machine.
- Keep all parts in good working condition and all hydraulic fittings tight. Replace all worn, damaged, or missing parts and decals. Keep all fasteners tight to ensure that the machine is in safe working condition.
- To ensure optimum performance and continued safety certification of the machine, use only genuine Toro replacement parts and accessories. Replacement parts and accessories made by other manufacturers could be dangerous, and such use could void the product warranty.

Recommended Maintenance Schedule(s)

Maintenance Service Interval	Maintenance Procedure
After the first 8 hours	• Change the engine oil. • Check the hydraulic-fluid level.
After the first 50 hours	• Change the hydraulic filters and hydraulic fluid.
After the first 100 hours	• Check the wheel-lug nuts.
Before each use or daily	• Check the safety-interlock system. • Check the engine-oil level. • Clean the air-intake screen (more often in dirty or dusty conditions). • Test the parking brake. • Inspect the blades. • Clean under the mower deck. • Wash the machine, especially after winter applications.
Every 50 hours	• Check the spark arrester (if equipped). • Check the tire pressure.

Maintenance Service Interval	Maintenance Procedure
Every 100 hours	• Change the engine oil. • Check, clean and gap the spark plug. • Check the battery. • Check the clutch. • Check and clean the engine cooling fins and shrouds (more often in dirty or dusty conditions). • Check the mower-deck belt(s).
Every 200 hours	• Change the engine-oil filter.
Every 250 hours	• Replace the primary air filter (more often in dirty or dusty conditions). • Check the inner air filter (more often in dirty or dusty conditions).
Every 300 hours	• Check and adjust the valve clearance. Contact an Authorized Service Dealer.
Every 500 hours	• Replace the inner air filter (more often in dirty or dusty conditions). • Adjust the caster-pivot bearing. • Check the hydraulic-fluid level. • Change the hydraulic filters and hydraulic fluid.
Every 800 hours	• Replace the fuel filter.
Every 1,000 hours	• Replace the transmission belt.
Before storage	• Paint chipped surfaces. • Perform all maintenance procedures listed above before storage. • Paint chipped surfaces. • Perform all maintenance procedures listed above before storage.
Yearly	• Grease the torsion idler. • Grease the front caster pivots (more often in dirty or dusty conditions). • Grease the caster-wheel hubs. • Grease the motion controls. • Apply anti-seize compound to the cushion knobs.

Important: **Refer to your engine owner's manual for additional maintenance procedures.**

Pre-Maintenance Procedures

Releasing the Cushion for Rear Access

You can release the cushion for rear access to the machine for maintenance or adjustment.

1. Lower the platform.
2. Loosen the twist knobs on each side of the machine (Figure 32).

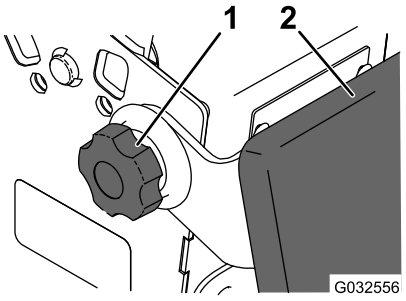

g032556

Figure 32

1. Twist knob
2. Cushion

3. Remove the cushion and lower it to the platform.
4. Perform any maintenance or adjustment on the machine.
5. Raise the cushion, and slide it onto the pins on both sides of the machine.
6. Tighten the twist knobs.

Lubrication

Greasing the Machine

Grease with No. 2 lithium or molybdenum grease.

1. Disengage the PTO and set the parking brake.
2. Shut off the engine, remove the key, and wait for all moving parts to stop before leaving the operating position.
3. Clean the grease fittings with a rag.

   Note: Make sure to scrape any paint off the front of the fitting(s).
4. Connect a grease gun to the fitting.
5. Pump grease into the fittings until grease begins to ooze out of the bearings.
6. Wipe up any excess grease.

Greasing the Torsion Idler

Service Interval: Yearly

Grease the torsion idler on the mower deck using high-temperature grease at the grease fitting shown in Figure 33.

Important: **Use only high-temperature grease. Do not use general-purpose grease.**

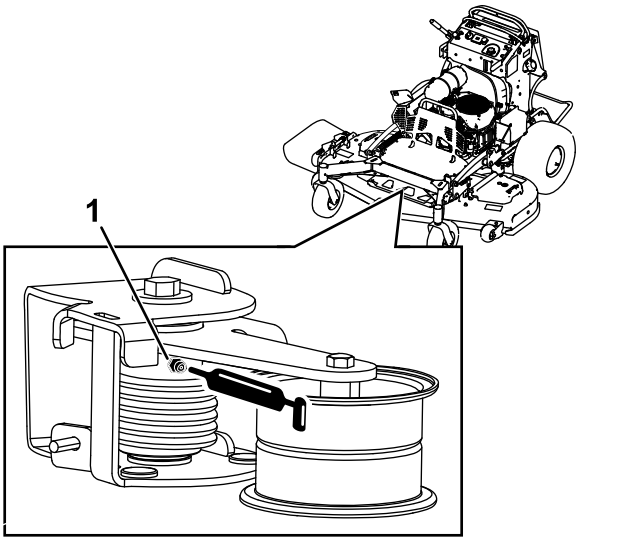

Figure 33

1. Grease fitting

Greasing the Front Caster Pivots

Service Interval: Yearly

Grease type: Lithium or molybdenum grease

1. Remove the dust cap and adjust the caster pivots; refer to Adjusting the Caster-Pivot Bearing (page 37).

   Note: Keep the dust cap off until you have finished greasing the caster pivots.
2. Remove the hex plug.
3. Thread a grease fitting into the hole.
4. Pump grease into the fitting until it oozes out around the top bearing.
5. Remove the grease fitting from the hole.
6. Install the hex plug and dust cap.

Greasing the Caster-Wheel Hubs

Service Interval: Yearly

Grease type: Lithium or molybdenum grease

1. Park the machine on a level surface, disengage the PTO, and engage the parking brake.
2. Shut off the engine, remove the key, and wait for all moving parts to stop before leaving the operating position.
3. Remove the caster wheel from the caster forks.
4. Remove the seal guards from the wheel hub (Figure 34).

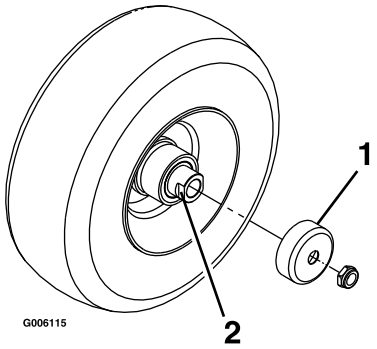

Figure 34

1. Seal guard
2. Spacer nut with wrench flats

5. Remove 1 spacer nut from the axle assembly in the caster wheel.

   Note: Thread-locking adhesive has been applied to lock the spacer nuts to the axle.

Remove the axle (with the other spacer nut still assembled to it) from the wheel assembly.

6. Pry out the seals, inspect bearings for wear or damage, and replace them if necessary.
7. Pack the bearings with a general-purpose grease.
8. Insert 1 bearing and 1 new seal into the wheel.

   Note: You must replace the seals.
9. If both spacer nuts in the axle assembly have been removed (or broken loose), apply a thread-locking adhesive to 1 spacer nut, threading it onto the axle with the wrench flats facing outward.

   Note: Do not thread the spacer nut all of the way onto the end of the axle. Leave approximately 3 mm (1/8 inch) from the outer surface of the spacer nut to the end of the axle inside the nut.
10. Insert the assembled nut and axle into the wheel on the side of the wheel with the new seal and bearing.
11. With the open end of the wheel facing up, fill the area inside the wheel around the axle full of general-purpose grease.
12. Insert the second bearing and the new seal into the wheel.
13. Apply a thread-locking adhesive to the second spacer nut, threading it onto the axle with the wrench flats facing outward.
14. Torque the nut to 8 to 9 N·m (71 to 80 in-lb), loosen it, then torque it to 2 to 3 N·m (20 to 25 in-lb).

    Note: Make sure that the axle does not extend beyond either nut.
15. Install the seal guards over the wheel hub and insert the wheel into the caster fork.
16. Install the caster bolt and tighten the nut fully.

Important: **To prevent seal and bearing damage, check the bearing adjustment often by spinning the caster wheel. The wheel should not spin freely (more than 1 or 2 revolutions) or have any side play. If the wheel spins freely, adjust the torque on the spacer nut until there is a slight amount of drag, and apply thread-locking adhesive.**

Greasing the Motion Controls

Service Interval: Yearly

Grease the operator-presence-control balljoint and the motion-control bushing for both levers.

Note: Use an oil drip between the lever brackets to grease the bushing, located in the pivot tube.

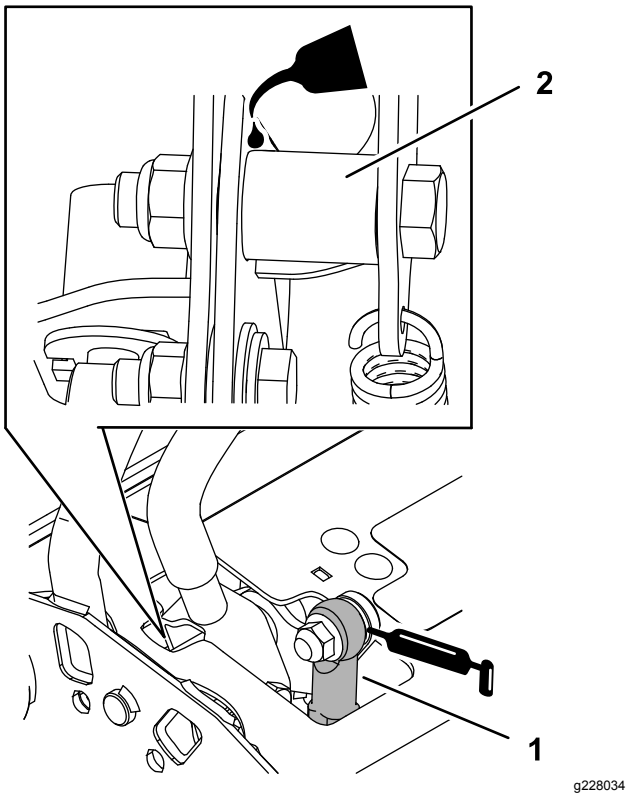

Figure 35

1. Operator-presence control balljoint
2. Pivot tube

Engine Maintenance

Engine Safety

- Shut off the engine before checking the oil or adding oil to the crankcase.
- Keep your hands, feet, face, clothing, and other body parts away from the muffler and other hot surfaces.

Servicing the Air Cleaner

Service Interval: Every 300 hours

Every 250 hours—Replace the primary air filter (more often in dirty or dusty conditions).

Every 250 hours—Check the inner air filter (more often in dirty or dusty conditions).

Every 500 hours—Replace the inner air filter (more often in dirty or dusty conditions).

Removing the Filters

1. Disengage the PTO, move the motion-control levers to the NEUTRAL-LOCK position, and engage the parking brake.
2. Shut off the engine, remove the key, and wait for all moving parts to stop before leaving the operating position.
3. Release the retaining clamps on the air cleaner and pull the air-cleaner cover off the air-cleaner body (Figure 36).

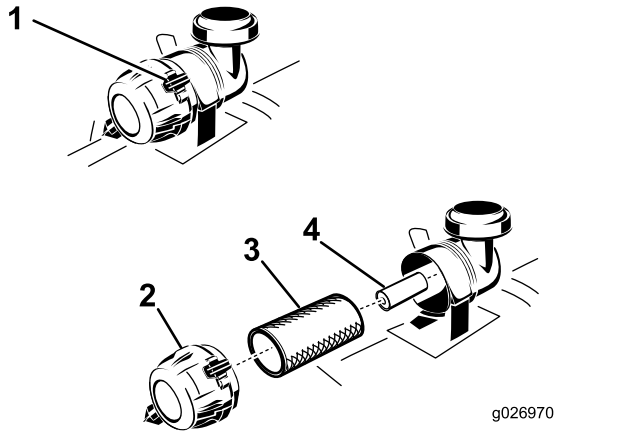

g026970

Figure 36

1. Air-cleaner clamps
2. Air-cleaner cover
3. Primary filter
4. Inner filter

4. Clean the inside of the air-cleaner cover with compressed air.
5. Gently slide the primary filter out of the air-cleaner body (Figure 36).

Note: Avoid knocking the filter into the side of the body.

6. Remove the inner filter only to replace it.

Inspecting the Filters

1. Inspect the safety filter. If it is dirty, replace both the safety and primary filters.

   Important: **Do not attempt to clean the safety filter. If the safety filter is dirty, then the primary filter is damaged.**

2. Inspect the primary filter for damage by looking into the filter while shining a bright light on the outside of the filter. If the primary filter is dirty, bent, or damaged, replace it.

   Note: Holes in the filter appear as bright spots. Do not clean the primary filter.

Installing the Filters

Important: **To prevent engine damage, always operate the engine with both air filters and the cover installed.**

1. If you are installing new filters, check each filter for shipping damage.

   Note: Do not use a damaged filter.

2. If you are replacing the inner filter, carefully slide it into the filter body (Figure 36).
3. Carefully slide the primary filter over the safety filter (Figure 36).

   Note: Ensure that the primary filter is fully seated by pushing on the outer rim while installing it.

   Important: **Do not press on the soft, inside area of the filter.**

4. Install the air-cleaner cover with the breather cap down, and rotate so that the retaining clamps lock the cover in place (Figure 36).

Servicing the Engine Oil

Engine-Oil Specifications

Oil Type:: Detergent oil (API service SF, SG, SH, SJ or SL)

Engine Oil Capacity: 2.1 L (71 fl oz) with the filter; 1.8 L (61 fl oz) without the filter

Viscosity: Refer to the table below.

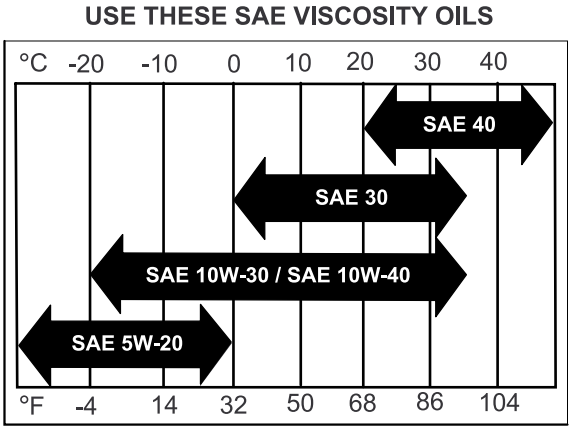

Figure 37

Checking the Engine-Oil Level

Service Interval: Before each use or daily

Note: Check the oil when the engine is cold.

⚠ WARNING

Contact with hot surfaces may cause personal injury.

Keep your hands, feet, face, clothing and other body parts away the muffler and other hot surfaces.

Important: **Do not overfill the crankcase with oil because damage to the engine may result. Do not run engine with oil below the low mark because the engine may be damaged.**

1. Park the machine on a level surface, disengage the PTO, and engage the parking brake.
2. Shut off the engine, remove the key, and wait for all moving parts to stop before leaving the operating position.
3. Check the engine-oil level as shown in (Figure 38).

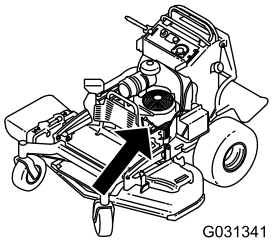

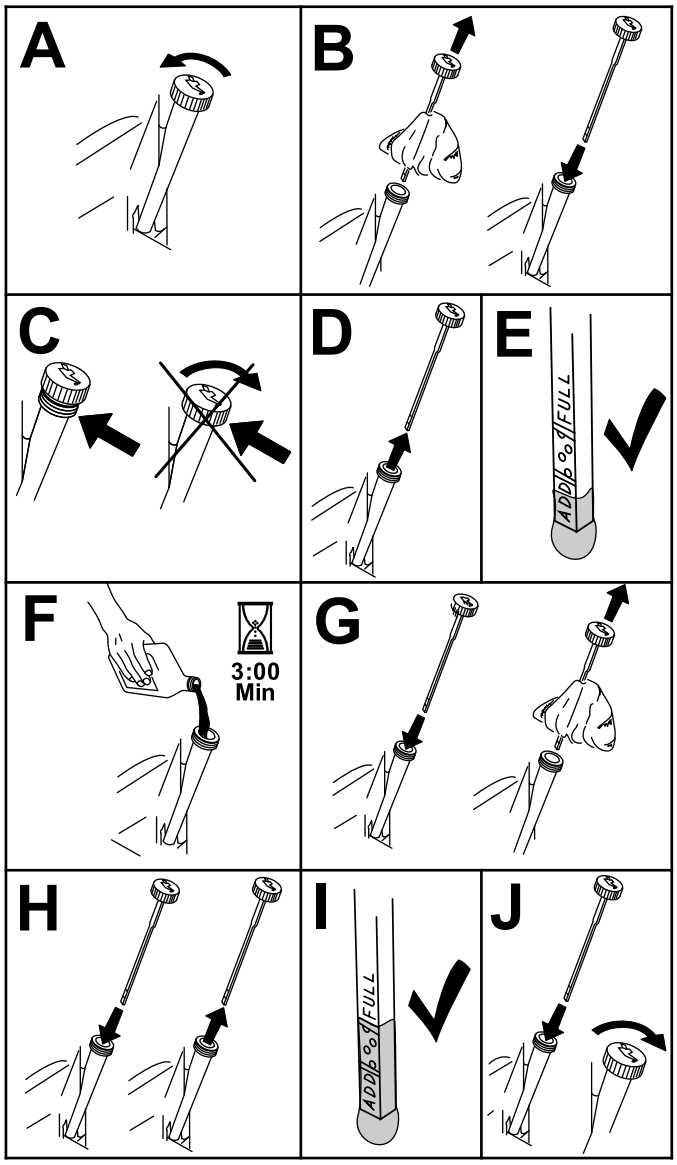

Figure 38

Changing the Engine Oil

Service Interval: After the first 8 hours

Every 100 hours

Note: Dispose of the used oil at a recycling center.

1. Park the machine so that the drain side is slightly lower than the opposite side to assure the oil drains completely.
2. Disengage the PTO, move the motion-control levers to the NEUTRAL-LOCK position, and engage the parking brake.
3. Shut off the engine, remove the key, and wait for all moving parts to stop before leaving the operating position.
4. Change the engine oil as shown in Figure 39.

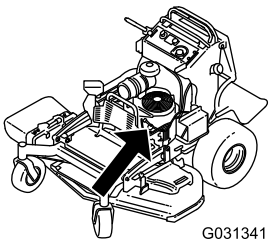

g031341

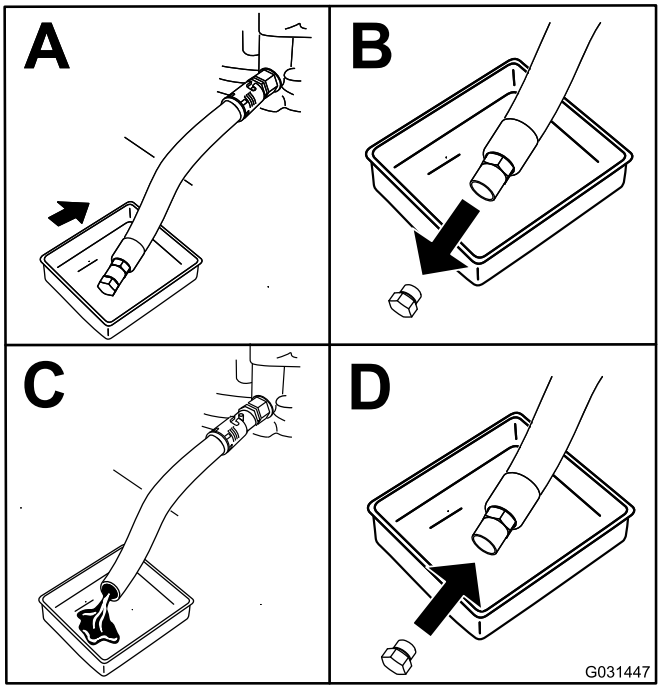

g031447

Figure 39

5. Slowly pour approximately 80% of the specified oil into the filler tube and slowly add the additional oil to bring it to the **Full** mark (Figure 40).

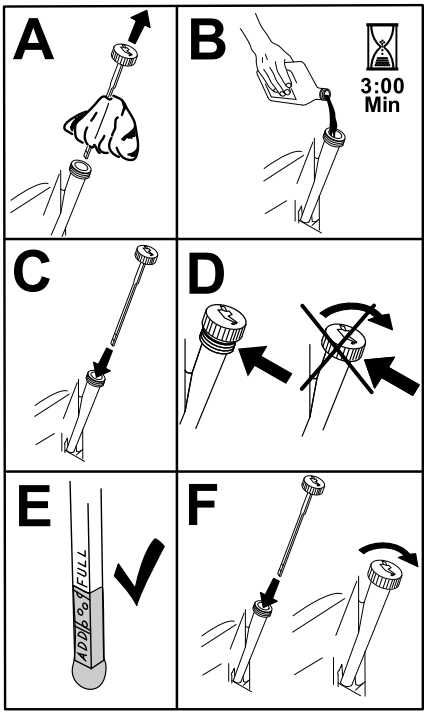

g194610

Figure 40

6. Start the engine and drive to a flat area.
7. Check the oil level again.

Changing the Engine-Oil Filter

Service Interval: Every 200 hours

Note: Change the engine-oil filter more frequently when operating conditions are extremely dusty or sandy.

1. Drain the oil from the engine; refer to Changing the Engine Oil (page 30).
2. Change the engine-oil filter (Figure 41).

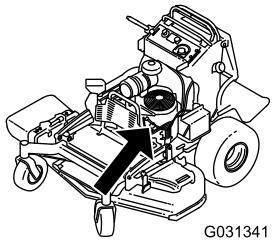

g031341

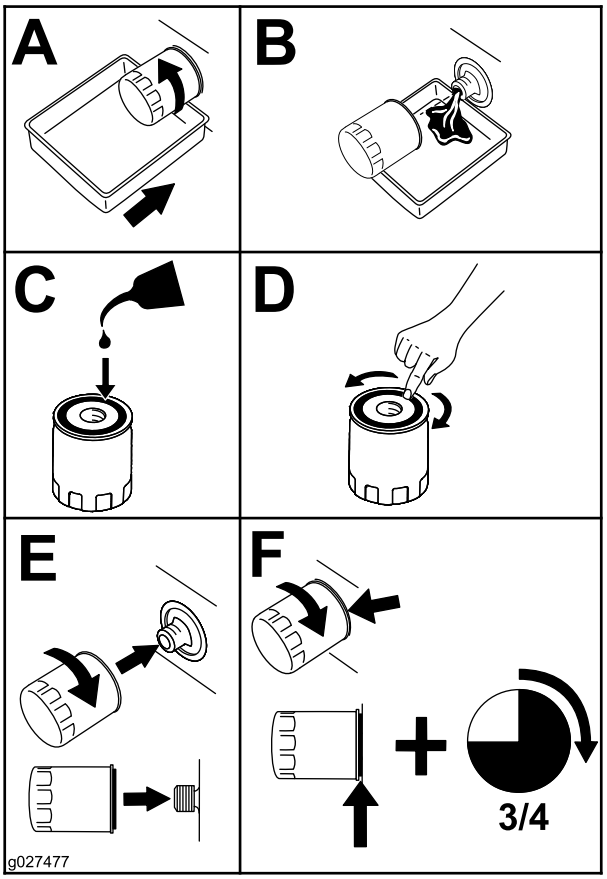

g027477

Figure 41

Note: Ensure that the oil-filter gasket touches the engine, then rotate the filter an extra 3/4 turn.

3. Fill the crankcase with the proper type of new oil; refer to Engine-Oil Specifications (page 29).

Servicing the Spark Plug

Service Interval: Every 100 hours

Ensure that the air gap between the center and side electrodes is correct before installing the spark plug.

Use a spark plug wrench for removing and installing the spark plug(s) and a gapping tool/feeler gauge to check and adjust the air gap. Install a new spark plug(s) if necessary.

Type: NGK® BPR4ES or equivalent

Air gap: 0.75 mm (0.03 inch)

Removing the Spark Plug

1. Park the machine on a level surface, disengage the PTO, and engage the parking brake.
2. Shut off the engine, remove the key, and wait for all moving parts to stop before leaving the operating position.
3. Remove the spark plug as shown in Figure 42.

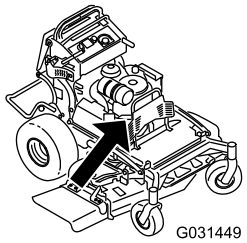

g031449

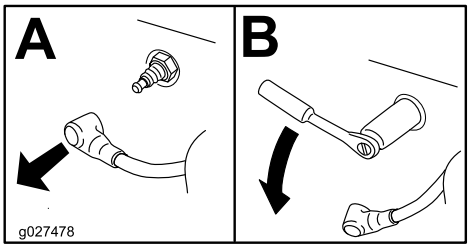

g027478

Figure 42

Checking the Spark Plug

Important: **Do not clean the spark plug(s). Always replace the spark plug(s) when it has a black coating, worn electrodes, an oily film, or cracks.**

If you see light brown or gray on the insulator, the engine is operating properly. A black coating on the insulator usually means the air cleaner is dirty.

Set the gap to 0.75 mm (0.03 inch).

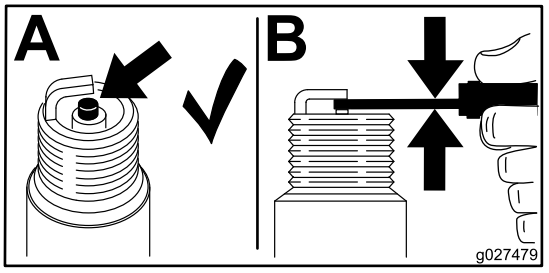

g027479

Figure 43

Installing the Spark Plug

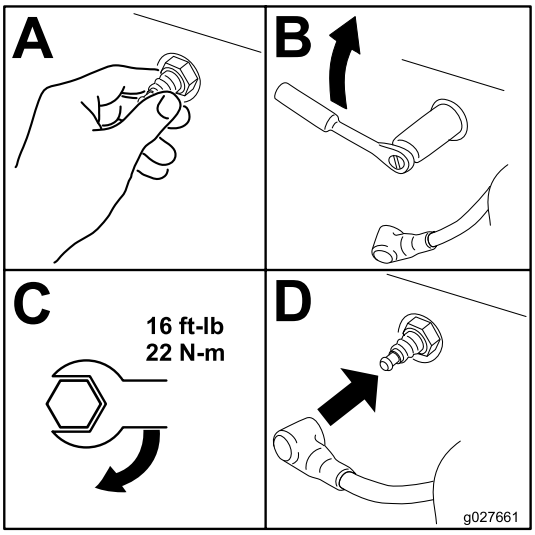

g027661

Figure 44

Checking the Spark Arrester

For Machines with a Spark Arrester

Service Interval: Every 50 hours

⚠ WARNING

Hot exhaust-system components may ignite fuel vapors even after you shut off the engine. Hot particles exhausted during engine operation may ignite flammable materials, resulting in personal injury or property damage.

Do not refuel or run the engine unless the spark arrester is installed.

1. Park the machine on a level surface, disengage the PTO, and engage the parking brake.
2. Shut off the engine, remove the key, and wait for all moving parts to stop before leaving the operating position.
3. Wait for the muffler to cool.
4. If you see any breaks in the screen or welds, replace the arrester.
5. If the screen is plugged, remove the arrester, shake loose particles out of the arrester, and clean the screen with a wire brush (soak the screen in solvent if necessary).
6. Install the arrester on the exhaust outlet.

Fuel System Maintenance

Draining the Fuel Tank

You can drain the fuel tank by removing it and pouring the fuel out of the fill neck; refer to Removing the Fuel Tank (page 33). You can also drain the fuel tank by using a siphon in the following procedure.

⚠ DANGER

In certain conditions, fuel is extremely flammable and highly explosive. A fire or explosion from fuel can burn you and others and can damage property.

- **Drain fuel from the fuel tank when the engine is cold. Do this outdoors in an open area. Wipe up any fuel that spills.**
- **Never smoke when draining fuel, and stay away from an open flame, or where a spark may ignite the fuel fumes.**

1. Disengage the PTO, move the motion-control levers to the NEUTRAL-LOCK position, and engage the parking brake.
2. Shut off the engine, remove the key, and wait for all moving parts to stop before leaving the operating position
3. Clean around the fuel cap to prevent debris from getting into the fuel tank (Figure 45).
4. Remove the fuel cap.
5. Insert a syphon pump into the fuel tank.
6. Using the syphon pump, drain the fuel into a fuel container.
7. Wipe up any spilled fuel.

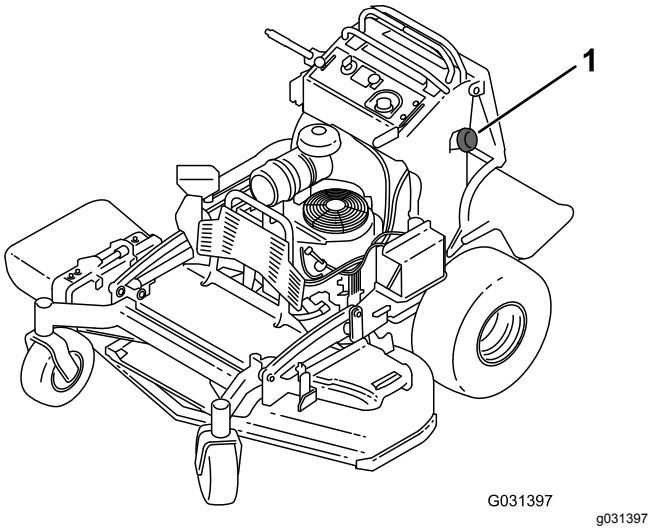

Figure 45

1. Fuel cap

Removing the Fuel Tank

1. Lower the platform.
2. Release the cushion; refer to Releasing the Cushion for Rear Access (page 25).
3. Remove the cross bracket.

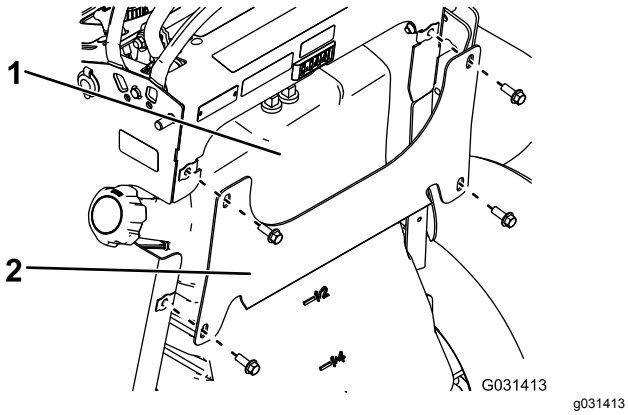

Figure 46

1. Fuel tank
2. Cross bracket

4. Remove the fuel tank and set it on the operator platform.

   Note: If you want to move the fuel tank further from the machine, remove the fuel and vent lines from the top of the tank.

Replacing the Fuel Filter

Service Interval: Every 800 hours/Yearly (whichever comes first)

Do not install a dirty filter if it is removed from the fuel line.

Note: Wipe up any spilled fuel.

1. Park the machine on a level surface, disengage the PTO, and engage the parking brake.
2. Shut off the engine, remove the key, and wait for all moving parts to stop before leaving the operating position.
3. Close the fuel-shutoff valve; refer to Using the Fuel-Shutoff Valve (page 21).
4. Replace the fuel filter as shown in Figure 47.

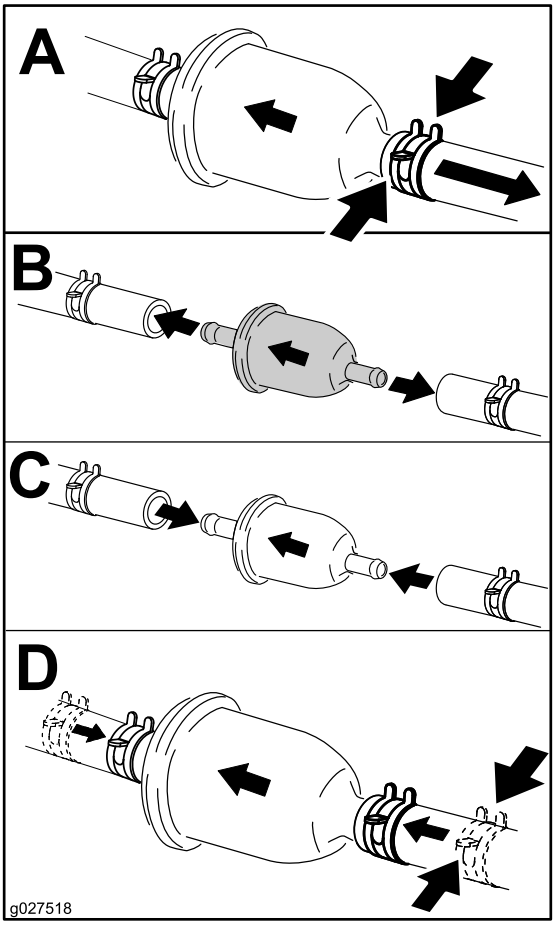

Figure 47

Electrical System Maintenance

Electrical System Safety

- Disconnect the battery or remove the spark-plug wire before making any repairs. Disconnect the negative terminal first and the positive terminal last. Connect the positive terminal first and negative last.
- Charge the battery in an open, well-ventilated area, away from sparks and flames. Unplug the charger before connecting or disconnecting the battery. Wear protective clothing and use insulated tools.

Servicing the Battery

Service Interval: Every 100 hours

Always keep the battery clean and fully charged. Use a paper towel to clean the battery case. If the battery terminals are corroded, clean them with a solution of four parts water and 1 part baking soda. Apply a light coating of grease to the battery terminals to prevent corrosion.

Voltage: 12 V

Removing the Battery

1. Park the machine on a level surface, disengage the PTO, and engage the parking brake.
2. Shut off the engine, remove the key, and wait for all moving parts to stop before leaving the operating position.
3. Remove the battery as shown in Figure 48.

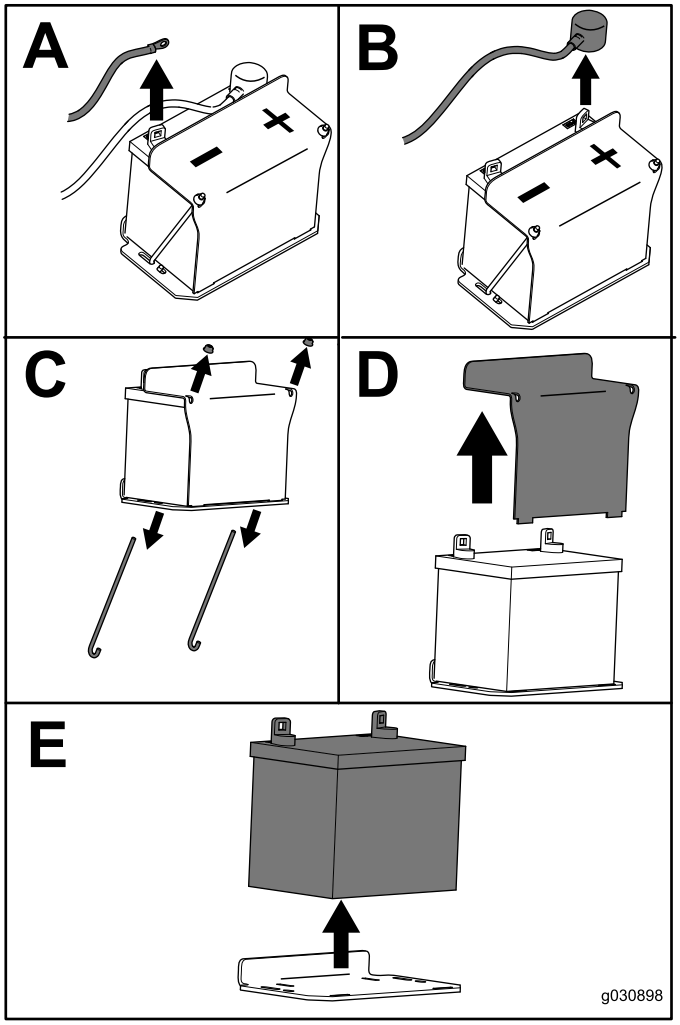

g030988

Figure 48

Charging the Battery

⚠ WARNING

Charging the battery produces gasses that can explode.

Never smoke near the battery and keep sparks and flames away from battery.

Important: **Always keep the battery fully charged (1.265 specific gravity) to prevent battery damage when the temperature is below 0°C (32°F).**

1. Remove the battery from the chassis; refer to Removing the Battery (page 34).
2. Check the electrolyte level.
3. Ensure that the filler caps are installed on the battery.
4. Charge the battery for 1 hour at 25 to 30 A or 6 hours at 4 to 6 A.
5. When the battery is fully charged, unplug the charger from the electrical outlet, and disconnect the charger leads from the battery posts (Figure 49).
6. Install the battery onto the machine and connect the battery cables; refer to Installing the Battery (page 35).

   Note: Do not run the machine with the battery disconnected; electrical damage may occur.

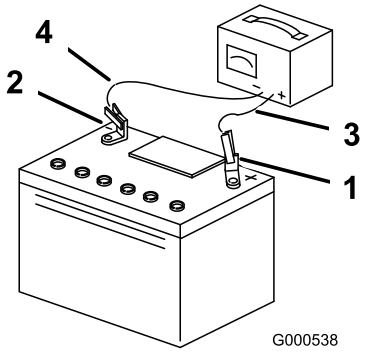

g000538

Figure 49

1. Positive battery post
2. Negative battery post
3. Red (+) charger lead
4. Black (-) charger lead

Installing the Battery

Install the battery as shown in Figure 50.

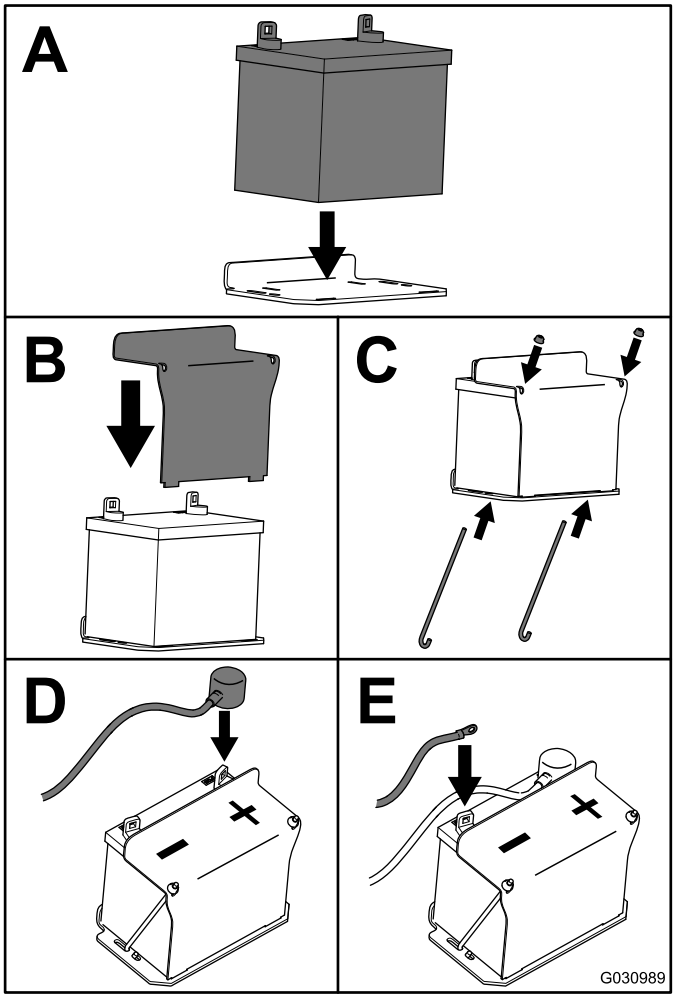

g030989

Figure 50

Servicing the Fuses

The electrical system is protected by fuses and requires no maintenance. If a fuse blows, check the component or circuit for a malfunction or short.

1. Release the cushion from the rear of the machine.
2. Pull out the fuse to remove or replace it (Figure 51).
3. Install the cushion to the rear of the machine.

   Note: Ensure that the correct-size fuse is installed Figure 51.

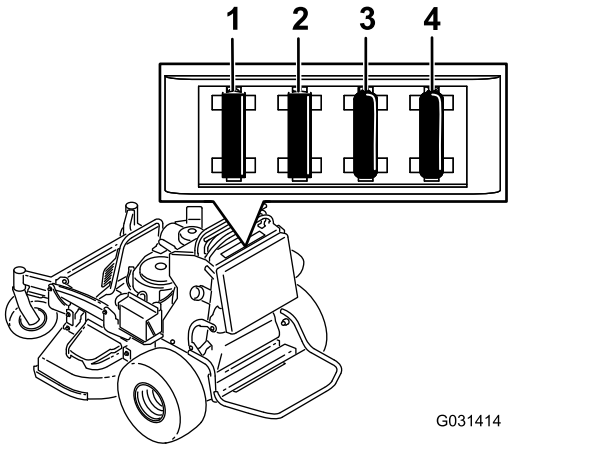

Figure 51

1. Ignition fuse—15 A
2. Accessory-port fuse—15 A
3. Power takeoff (PTO) fuse—10 A
4. Infocenter fuse—7.5 A

Drive System Maintenance

Adjusting the Tracking

If you push both motion-control levers forward the same distance and the machine pulls to 1 side, adjust the tracking as follows.

1. Park the machine on a level surface, disengage the PTO, and engage the parking brake.
2. Shut off the engine, remove the key, and wait for all moving parts to stop before leaving the operating position.
3. Release the cushion from the rear of the machine; refer to Releasing the Cushion for Rear Access (page 25).

   Note: For easier access, you can also remove the fuel tank; refer to Removing the Fuel Tank (page 33).
4. Rotate the left control rod in quarter-turn increments until the machine tracks straight (Figure 52).

   Note: If the machine pulls to the right, shorten the control rod by rotating it to the right. If the machine pulls to the left, lengthen the rod by rotating it to the left.

   Note: Adjust only the left control rod to match the left wheel speed to the right wheel speed. Do not adjust the right wheel speed, as this positions the right motion-control lever out of the center for the control panel neutral-lock slot.

   Important: **Do not rotate the control rod too far, as this may cause the machine to creep in neutral.**

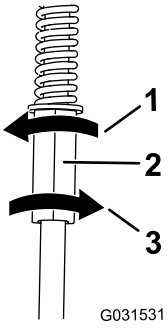

Figure 52

1. Rotate left to lengthen the rod.
2. Left control rod
3. Rotate right to shorten the rod.

5. Check for proper tracking, and adjust the rod as necessary.

Note: If you are unable to achieve proper tracking by adjusting the left control rod, contact your Authorized Service Dealer.

6. Check that the machine does not creep from the neutral position with the park brakes disengaged.
7. Install the fuel tank, if you removed it.
8. Install the cushion.

Checking the Tire Pressure

Service Interval: Every 50 hours/Monthly (whichever comes first)

Maintain the air pressure in the rear tires at 83 to 97 kPa (12 to 14 psi).

Important: **Uneven tire pressure can cause an uneven cut.**

Note: The front tires are semi-pneumatic tires and do not require air-pressure maintenance.

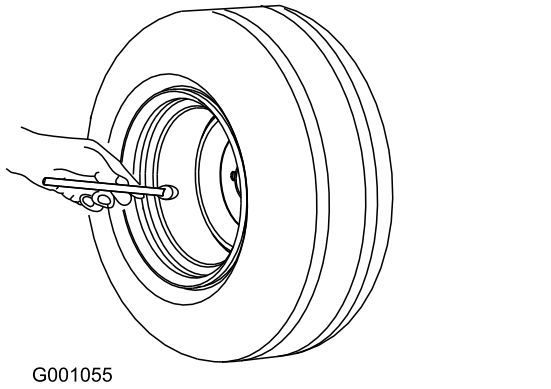

Figure 53

Adjusting the Caster-Pivot Bearing

Service Interval: Every 500 hours/Yearly (whichever comes first)

1. Disengage the blade-control switch (PTO), move the motion control levers to the NEUTRAL-LOCK position, and set the parking brake.
2. Shut off the engine, remove the key, and wait for all moving parts to stop before leaving the operating position.
3. Remove the dust cap from the caster and tighten the locknut (Figure 54).
4. Tighten the locknut until the spring washers are flat, and then back off a 1/4 turn to properly set the preload on the bearings (Figure 54).

   Important: **Make sure that the spring washers are installed correctly as shown in Figure 54.**
5. Install the dust cap (Figure 54).

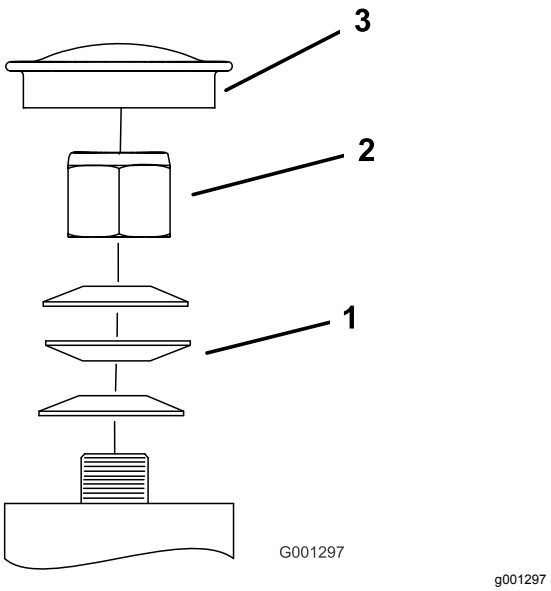

Figure 54

1. Spring washers
2. Locknut
3. Dust cap

Servicing the Caster Wheels and Bearings

The caster wheels rotate on a roller bearing supported by a spanner bushing. If the bearing is kept well lubricated, wear will be minimal. Failure to keep the bearing well lubricated causes rapid wear. A wobbly caster wheel usually indicates a worn bearing.

1. Remove the locknut and wheel bolt holding the caster wheel to the caster fork (Figure 55).

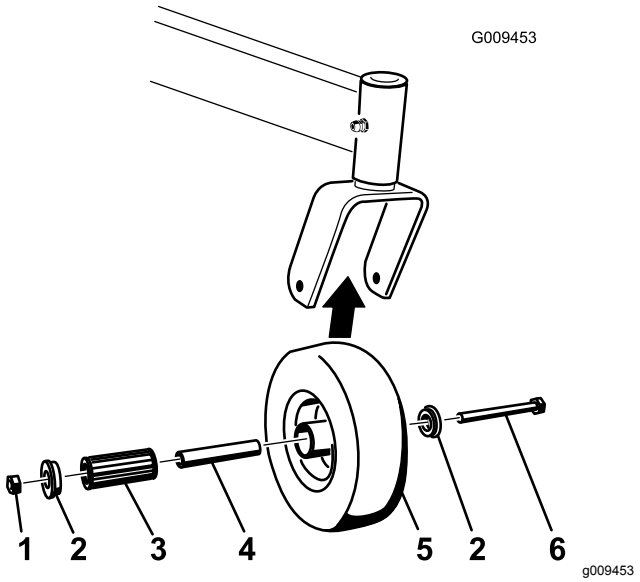

Figure 55

1. Locknut
2. Bushing
3. Spanner bushing
4. Roller bearing
5. Caster wheel
6. Wheel bolt

2. Remove 1 bushing, then pull the spanner bushing and roller bearing out of the wheel hub (Figure 55).
3. Remove the other bushing from the wheel hub and clean any grease and dirt from the wheel hub (Figure 55).
4. Inspect the roller bearing, bushings, spanner bushing and the inside of the wheel hub for wear.

   Note: Replace any damaged or worn parts (Figure 55).
5. Place 1 bushing into the wheel hub (Figure 55).
6. Grease the roller bearing and spanner bushing, and slide them into the wheel hub (Figure 55).
7. Place the second bushing into the wheel hub (Figure 55).
8. Install the caster wheel into the caster fork and secure it with the wheel bolt and locknut (Figure 55).
9. Tighten the locknut until the spanner bushing bottoms against the inside of the caster forks (Figure 55).
10. Grease the fitting on the caster wheel.

Removing the Clutch Shim

Service Interval: Every 100 hours

When the clutch brake has worn to the point where the clutch no longer engages consistently, you can remove the shim to extend the clutch life (Figure 56).

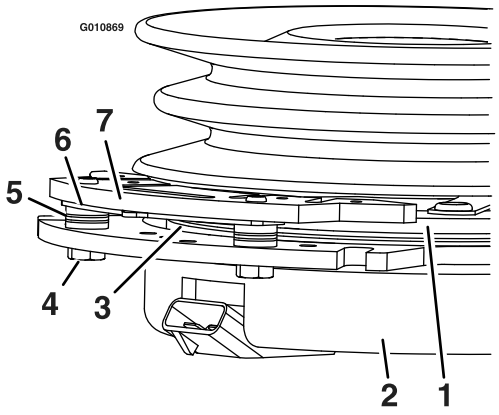

Figure 56

1. Armature
2. Field shell
3. Rotor
4. Brake-mounting bolt
5. Brake spacer
6. Shim.
7. Brake pole

1. Park the machine on a level surface, disengage the PTO, and engage the parking brake.
2. Shut off the engine, remove the key, and wait for all moving parts to stop before leaving the operating position.
3. Using an air compressor, blow out any debris under the brake pole and around the brake spacers.

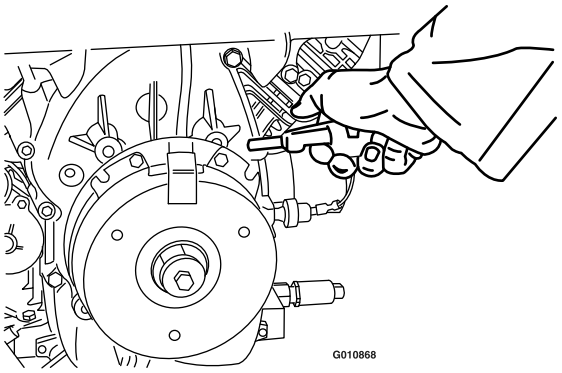

Figure 57

4. Check the condition of the wire-harness leads, connectors, and terminals. Clean or repair them as necessary.
5. Verify that 12 V is present at the clutch connector when the you engage the PTO switch.

6. Measure the gap between the rotor and armature. If the gap is greater than 1 mm (0.04 inch), proceed with the following steps:

   A. Loosen both brake mounting bolts 1/2 to 1 full turn as shown in Figure 58.

      Note: Do not remove the brake pole from the field shell/armature. The brake pole has worn to match the armature and needs to continue to match after you remove the shim to ensure the proper brake torque.

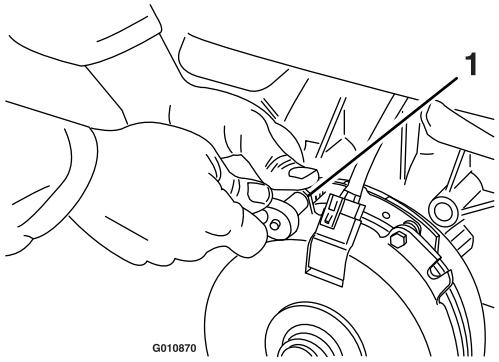

g010870

Figure 58

1. Brake-mounting bolt

   B. Using needle-nose pliers, or by hand, remove the shim.

      Note: Do not discard the shim until you confirm that the clutch functions properly.

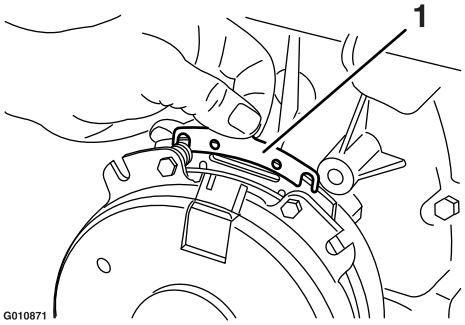

g010871

Figure 59

1. Shim

   C. Using a pneumatic line, blow out any debris under the brake pole and around the brake spacers.

   D. Torque each bolt (M6 x 1) to 12.3 to 13.7 N·m (9.5 to 10.5 ft-lb).

   E. Using a 0.010 inch thick-feeler gauge, verify that a gap is present between the rotor and armature face on both sides of the brake pole as shown in Figure 60 and Figure 61.

      Note: Due to the way the rotor and armature faces wear (peaks and valleys), it is sometimes difficult to measure the true gap.

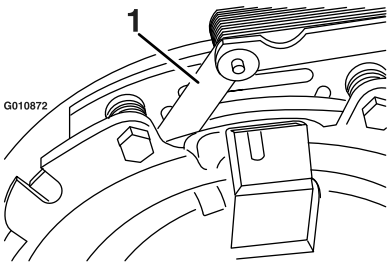

g010872

Figure 60

1. Feeler gauge

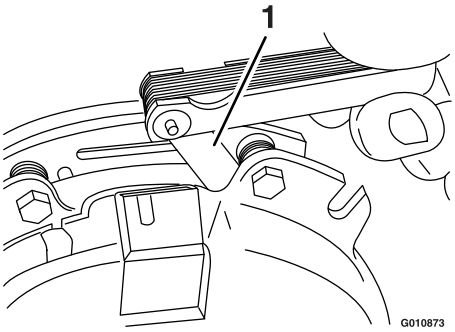

g010873

Figure 61

1. Feeler gauge

   - If the gap is less than 0.010 inch, then install the shim and refer to Troubleshooting (page 54).
   - If the gap is sufficient, proceed to the safety check in step F.

   F. Perform the following safety check:

      i. Sit on the seat and start the engine.

      ii. Make sure that the blades do not engage when the PTO switch is in the OFF position and the clutch is disengaged.

      Note: If the clutch does not disengage, install the shim, and refer to Troubleshooting (page 54).

      iii. Engage and disengage the PTO switch 10 consecutive times to ensure that the clutch is functioning properly.

      Note: If the clutch does not engage properly, refer to Troubleshooting (page 54).

Checking the Wheel-Lug Nuts

Service Interval: After the first 100 hours—Check the wheel-lug nuts.

Check and torque the wheel-lug nuts to 115 to 142 N·m (85 to 105 ft-lb).

Cooling System Maintenance

Cleaning the Air-Intake Screen

Service Interval: Before each use or daily

Before each use, remove any buildup of grass, dirt, or other debris from the cylinder and cylinder-head cooling fins, air-intake screen on the flywheel end, and the carburetor-governor levers and linkage. This helps ensure adequate cooling of the engine and the correct engine speed, and it reduces the possibility of overheating or mechanical damage to the engine.

Cleaning the Cooling System

Service Interval: Every 100 hours—Check and clean the engine cooling fins and shrouds (more often in dirty or dusty conditions).

1. Park the machine on a level surface, disengage the PTO, and engage the parking brake.
2. Shut off the engine, remove the key, and wait for all moving parts to stop before leaving the operating position.
3. Remove the air-intake screen and fan housing (Figure 62).
4. Clean the debris and grass from the engine parts.
5. Install the air-intake screen and fan housing (Figure 62).

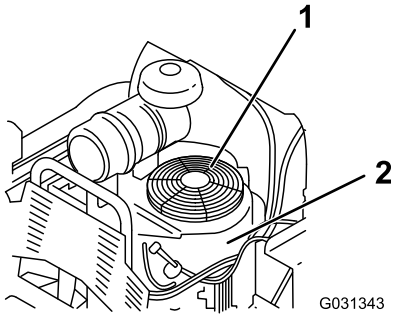

g031343

Figure 62

1. Guard and engine air-intake screen
2. Fan housing

Brake Maintenance

Testing the Parking Brake

Service Interval: Before each use or daily

Before each use, test the parking brake on both a level surface and slope.

Always engage the parking brake when you stop the machine or leave it unattended. If the parking brake does not hold securely, adjust it.

1. Disengage the PTO and engage the parking brake
2. Shut off the engine, remove the key, and wait for all moving parts to stop before leaving the operating position.
3. Disengage the parking brake.
4. Engage the brake lever and ensure that the machine does not move.
5. Adjust the brake if needed.

Adjusting the Brakes

1. Remove the fuel tank; refer to Removing the Fuel Tank (page 33).
2. Loosen the bolt on the cable clamp on the left side of the machine.

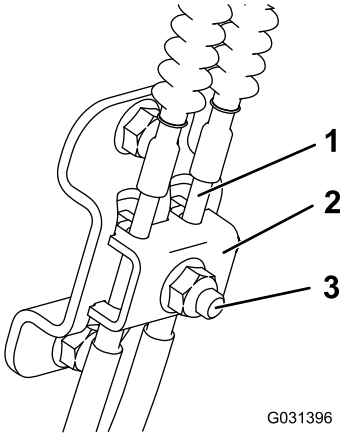

g031396

Figure 63

1. Cable
2. Cable clamp
3. Bolt and nut

3. Pull down on the cables until they are taut.
4. Tighten the nut.
5. Install the fuel tank, cross bracket, and cushion.

Belt Maintenance

Checking the Belts

Service Interval: Every 100 hours—Check the mower-deck belt(s).

Check belts for cracks, frayed edges, burn marks, wear, signs of overheating, or any other damage.

The signs of a worn mower belt are squealing while the belt is rotating, blades slipping while you are cutting grass, frayed belt edges, burn marks, and cracks. Replace the mower belt if you detect any of these signs.

Replacing the Mower-Deck Belt

1. Disengage the PTO and engage the parking brake.
2. Shut off the engine, remove the key, and wait for all moving parts to stop before leaving the operating position.
3. Replace the belt as shown in Figure 64.

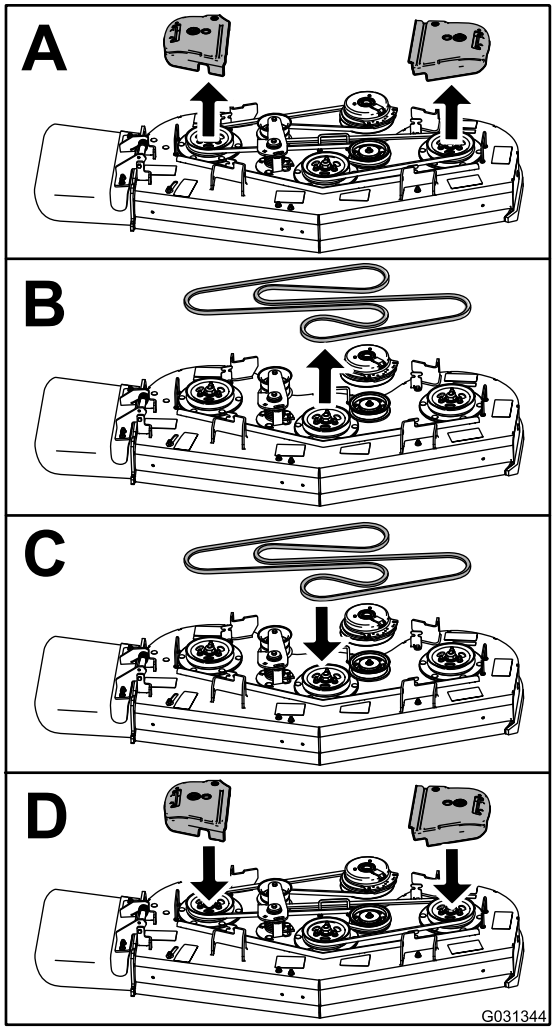

g031344

Figure 64

Replacing the Transmission Belt

Service Interval: Every 1,000 hours—Replace the transmission belt.

1. Remove the fuel tank; refer to Removing the Fuel Tank (page 33).
2. Remove the hydraulic-reservoir cap.
3. Locate the drain plugs in the bottom of the transmission and place a drain pan under the plug (Figure 65).

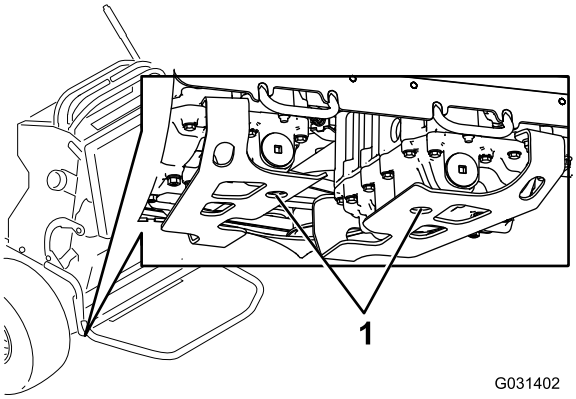

g031402

Figure 65

1. Drain plug

4. Allow the hydraulic fluid to drain from the machine.
5. Remove the lower hydraulic hose (Figure 66).

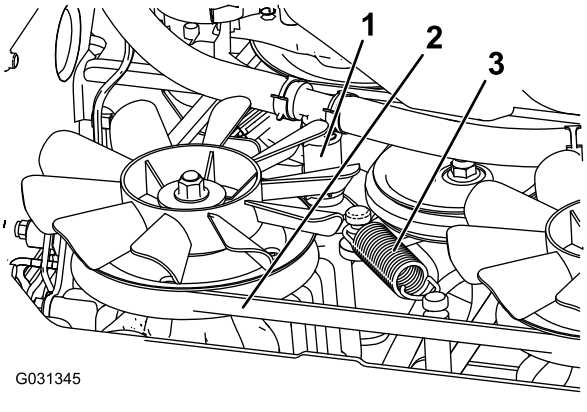

g031345

Figure 66

1. Lower hydraulic hose
2. Transmission belt
3. Tension spring

6. Remove the tension spring (Figure 66).

⚠ CAUTION

The spring is under tension when installed and can cause personal injury.

Wear safety glasses and be careful when removing the spring.

7. Remove the deck belt from the clutch and clutch stop (Figure 66).
8. Install the new belt.
9. Install the tension spring and lower hydraulic hose.
10. Install the drain plugs and torque to 22 to 27 N·m (16 to 20 ft-lb).
11. Add hydraulic fluid to the fill level.
12. Install the hydraulic-reservoir cap.
13. Run the machine for 10 minutes and verify that the hydraulic fluid is at the correct level.

Controls System Maintenance

Adjusting the Motion-Control Levers

If the motion-control levers do not align horizontally, adjust the motion-control levers.

1. Park the machine on a level surface, disengage the PTO, and engage the parking brake.
2. Shut off the engine, remove the key, and wait for all moving parts to stop before leaving the operating position.
3. Push the motion-control levers down out of the NEUTRAL-LOCK position (Figure 67).
4. Check if the right motion-control lever aligns horizontally with the left motion-control lever (Figure 67).

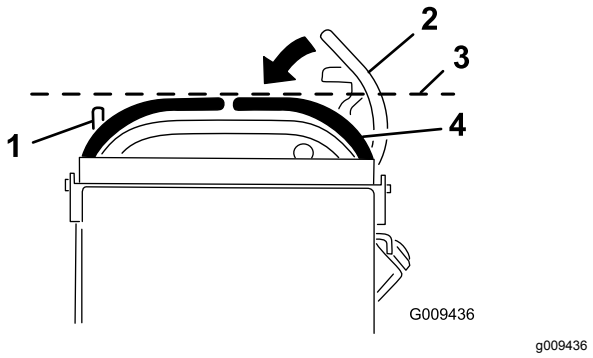

Figure 67

1. Left motion-control lever
2. Right motion-control lever in the Neutral-lock position
3. Check the horizontal alignment here
4. Right motion-control lever

Note: To adjust the right motion-control lever horizontally, adjust the cam.

5. Release the cushion from the rear of the machine.
6. Loosen the nut holding the cam (Figure 68).

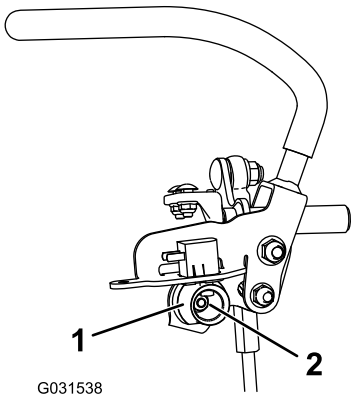

Figure 68

1. Cam
2. Nut

7. Adjust the cam until it aligns with the left motion-control lever and tighten the nut for the cam.

   Note: Moving the cam clockwise (in the vertical position) lowers the handle; moving the cam counterclockwise (in the vertical position) raises the handle.

   Important: **Ensure that the flat portion of the cam does not go above a vertical position (right or left); otherwise you may damage the switch.**

8. Repeat steps 3 through 7 for the left motion-control lever.

Hydraulic System Maintenance

Hydraulic System Safety

- Seek immediate medical attention if fluid is injected into skin. Injected fluid must be surgically removed within a few hours by a doctor.
- Ensure that all hydraulic-fluid hoses and lines are in good condition and all hydraulic connections and fittings are tight before applying pressure to the hydraulic system.
- Keep your body and hands away from pinhole leaks or nozzles that eject high-pressure hydraulic fluid.
- Use cardboard or paper to find hydraulic leaks.
- Safely relieve all pressure in the hydraulic system before performing any work on the hydraulic system.

Hydraulic System Specifications

Hydraulic Fluid Type: Toro® HYPR-OIL™ 500 hydraulic fluid

Hydraulic System Fluid Capacity: 4.7 L (159 fl oz)

Important: **Use the fluid specified. Other fluids could damage the system.**

Checking the Hydraulic Fluid

Service Interval: After the first 8 hours

Every 500 hours

Note: Check the hydraulic-fluid level when the fluid is cold.

1. Park the machine on a level surface, disengage the PTO, and engage the parking brake.
2. Shut off the engine, remove the key, and wait for all moving parts to stop before leaving the operating position.
3. Clean the area around the cap and the filler neck of the hydraulic tank (Figure 69).

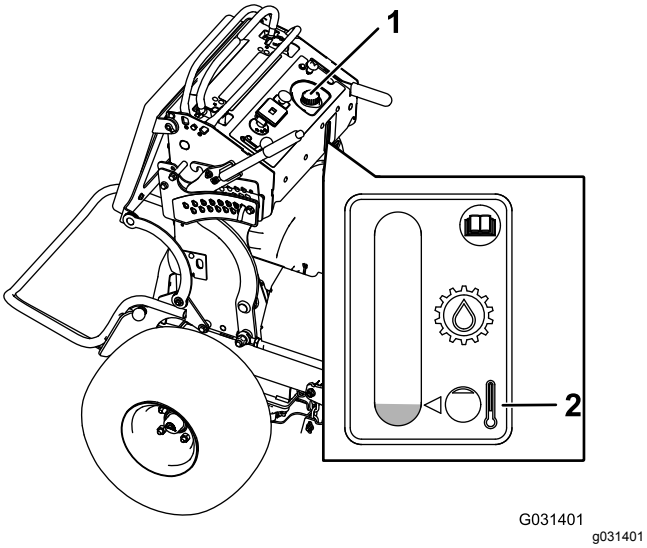

Figure 69

1. Hydraulic-tank cap
2. Fill level

4. Remove the cap from the filler neck (Figure 69).

   Note: Look inside to check the fluid level in the reservoir.

5. Add fluid to the reservoir until it reaches the reaches the minimum cold fill level.
6. Install the cap on the filler neck.

Replacing the Hydraulic Fluid and Filters

Service Interval: After the first 50 hours

Every 500 hours/Yearly (whichever comes first)—Change the hydraulic filters and hydraulic fluid.

Change the hydraulic fluid more frequently in severe conditions or in a hot operating climate. Contact your Authorized Service Dealer for a hydraulic kit to replace the hydraulic filters.

⚠ WARNING

Hot hydraulic fluid can cause severe burns.

Allow the hydraulic fluid to cool before performing any maintenance on the hydraulic system.

1. Park the machine on a level surface, disengage the PTO, and engage the parking brake.
2. Shut off the engine, remove the key, and wait for all moving parts to stop before leaving the operating position.
3. Remove the fuel tank; refer to Removing the Fuel Tank (page 33).
4. Remove the hydraulic-reservoir cap.
5. Locate the drain plug in the bottom of each transmission and place a drain pan under the plugs (Figure 70).

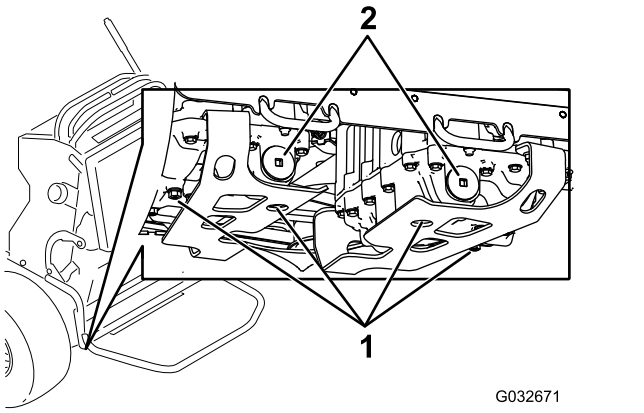

Figure 70

1. Drain plug
2. Hydraulic filter

6. Remove the drain plugs.
7. Allow the hydraulic fluid to fully drain from the machine.
8. Remove the hydraulic filter cap and filter from each transmission.
9. Install new hydraulic filters with the spring side facing out and install the filter caps.
10. Install the drain plugs and torque to 22 to 27 N·m (16 to 20 ft-lb).
11. Loosen the vent plug in each transmission so that it is loose and wobbles (Figure 71).

    Note: This allows air to escape the hydraulic system as you add hydraulic fluid.

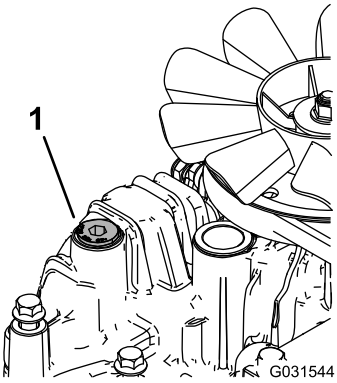

Figure 71

Left transmission shown

1. Vent plug

12. Slowly add fluid to the hydraulic tank until it starts to come out 1 of the vent plugs.

Important: **Use the fluid specified in Hydraulic System Specifications (page 44) or equivalent. Other fluids could cause system damage.**

Important: **Monitor the level of fluid in the hydraulic tank so that you do not overfill it.**

13. Tighten the vent plugs.
14. Install the hydraulic-tank cap.
15. Install the fuel tank.
16. Start the engine and let it run for about 2 minutes to purge air from the system.
17. Shut off the engine and check for leaks.

    Note: If 1 or both wheels do not drive, refer to Bleeding the Hydraulic System (page 46).

Bleeding the Hydraulic System

The traction system is self-bleeding, however, it may be necessary to bleed the system if fluid is changed or after work is performed on the system.

1. Park the machine on a level surface, disengage the PTO, and engage the parking brake.
2. Shut off the engine, remove the key, and wait for all moving parts to stop before leaving the operating position.
3. Raise the rear of the machine onto jack stands high enough to raise the drive wheels off the ground.
4. Start the engine and move the throttle control to the idle position.

   Note: If the drive wheel does not rotate, assist the purging of the system by carefully rotating the tire in the forward direction.
5. Check the hydraulic fluid level as it drops, and add fluid as required to maintain the proper level.
6. Repeat this procedure for the opposite wheel.

Mower Deck Maintenance

Servicing the Cutting Blades

To ensure a superior quality of cut, keep the blades sharp. For convenient sharpening and replacement, keep extra blades on hand.

Blade Safety

A worn or damaged blade can break, and a piece of the blade could be thrown toward you or bystanders, resulting in serious personal injury or death.

- Inspect the blades periodically for wear or damage.
- Use care when checking the blades. Wrap the blades or wear gloves, and use caution when servicing the blades. Only replace or sharpen the blades; never straighten or weld them.
- Always inspect the machine to ensure that the blades and blade bolts are not worn or damaged. Replace worn or damaged blades and bolts in sets to preserve balance.
- On multi-bladed machines, take care as rotating 1 blade can cause other blades to rotate.

Before Inspecting or Servicing the Blades

1. Park the machine on a level surface, disengage the PTO, and engage the parking brake.
2. Shut off the engine, remove the key, and disconnect the spark-plug wires from the spark plugs.

Inspecting the Blades

Service Interval: Before each use or daily

1. Inspect the cutting edges (Figure 72).
2. If the edges are not sharp or have nicks, remove and sharpen the blade; refer to Sharpening the Blades (page 47).
3. Inspect the blades, especially in the curved area.
4. If you notice any cracks, wear, or a slot forming in this area, immediately install a new blade (Figure 72).

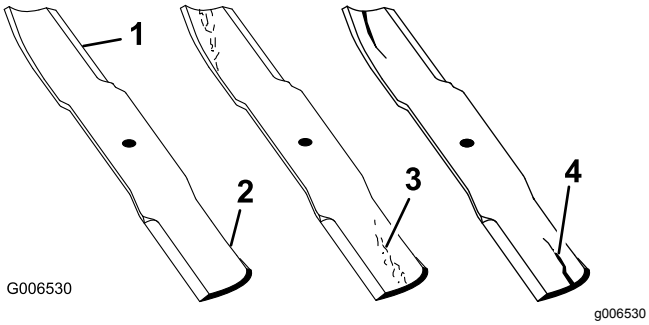

Figure 72

1. Cutting edge
2. Curved area
3. Wear/slot forming
4. Crack

Checking for Bent Blades

1. Rotate the blades until the ends face forward and backward.
2. Measure from a level surface to the cutting edge, position **A**, of the blades (Figure 73).

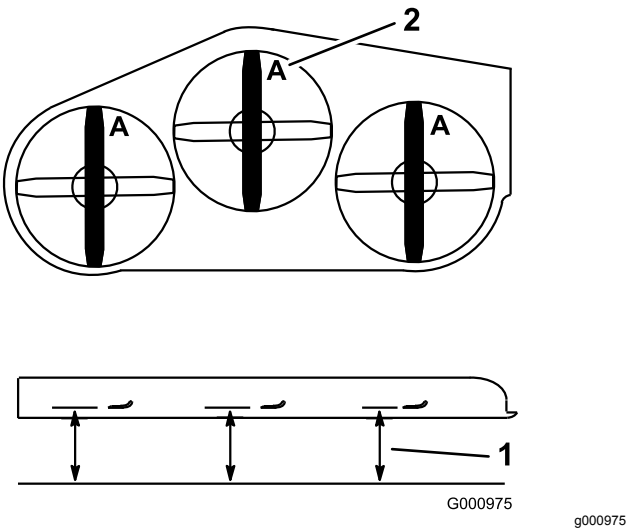

Figure 73

1. Measure here from blade to hard surface
2. Position A

3. Rotate the opposite ends of the blades forward.
4. Measure from a level surface to the cutting edge of the blades at the same position as in step 2 above.

   Note: The difference between the dimensions obtained in steps 2 and 3 must not exceed 3 mm (1/8 inch).

   Note: If this dimension exceeds 3 mm (1/8 inch), replace the blade.

⚠ WARNING

A blade that is bent or damaged could break apart and could critically injure you or bystanders.

- **Always replace a bent or damaged blade with a new blade.**
- **Do not file or create sharp notches in the edges or surfaces of the blade.**

Removing the Blades

Replace the if a blade hits a solid object, is out of balance, or is bent. For best performance and continued safety conformance of the machine, use genuine Toro replacement blades. Replacement blades made by other manufacturers may result in non-conformance with safety standards.

1. Hold the blade end using a rag or thickly padded glove.
2. Remove the blade bolt, curved washer, and blade from the spindle shaft (Figure 74).

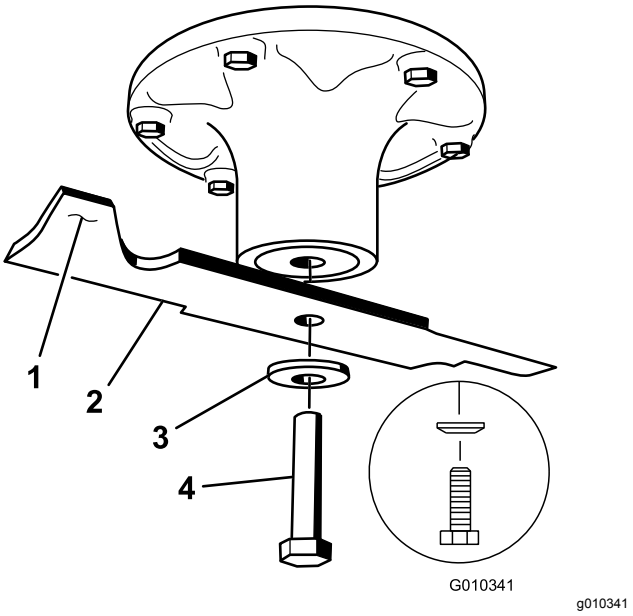

Figure 74

1. Sail area of the blade
2. Blade
3. Curved washer
4. Blade bolt

Sharpening the Blades

1. Use a file to sharpen the cutting edge at both ends of the blade (Figure 75).

   Note: Maintain the original angle.

   Note: The blade retains its balance if the same amount of material is removed from both cutting edges.

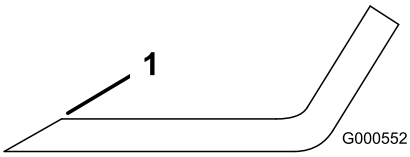

Figure 75

1. Sharpen at original angle.

2. Check the balance of the blade by putting it on a blade balancer (Figure 76).

   Note: If the blade stays in a horizontal position, the blade is balanced and can be used.

   Note: If the blade is not balanced, file some metal off the end of the sail area only (Figure 76).

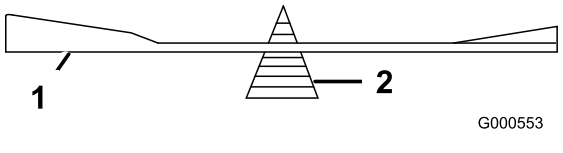

Figure 76

1. Blade
2. Balancer

3. Repeat this procedure until the blade is balanced.

Installing the Blades

1. Install the blade onto the spindle shaft (Figure 77).

   Important: **The curved part of the blade must be pointing upward toward the inside of the deck to ensure proper cutting.**

2. Install the spring disk and blade bolt (Figure 77).

   Note: The spring-disk cone must be installed toward the bolt head (Figure 77).

3. Torque the blade bolt to 115 to 150 N·m (85 to 110 ft-lb).

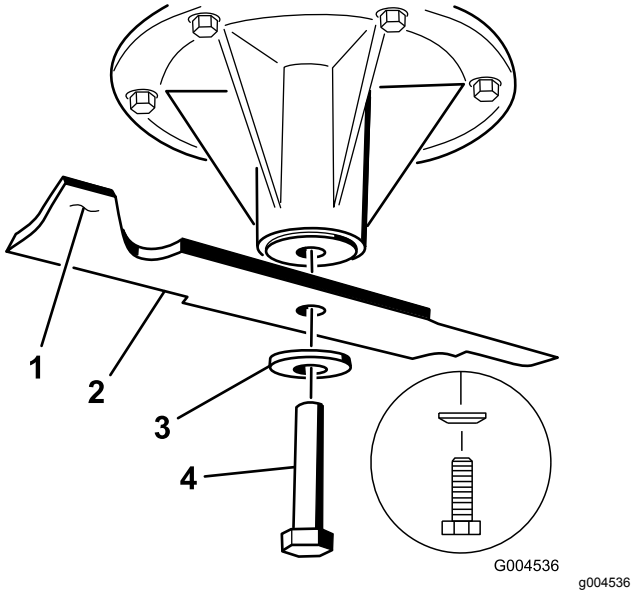

Figure 77

1. Sail area of the blade
2. Blade
3. Spring disk
4. Blade bolt

Leveling the Mower Deck

Preparing the Machine

Ensure that the mower deck is level any time you install the mower deck or when you see an uneven cut on your lawn.

Level the mower deck side to side before adjusting the front-to-rear slope.

1. Park the machine on a level surface, disengage the PTO, and engage the parking brake.
2. Shut off the engine, remove the key, and disconnect the spark-plug wires from the spark plugs.
3. Check the tire pressure of both drive tires; refer to Checking the Tire Pressure (page 37).
4. Check the mower deck for bent blades; remove and replace any bent blades; refer to Checking for Bent Blades (page 47).
5. Lower the mower deck to the 76 mm (3 inch) height-of-cut position.

Checking the Mower Deck Side-to-Side Height

1. Adjust the rear-tire pressure.
2. Ensure that the blades are not bent; refer to Checking for Bent Blades (page 47).
3. Position the blades side to side.

4. Measure at the **B** and **C** locations from a level surface to the cutting edge of blade tips (Figure 78).

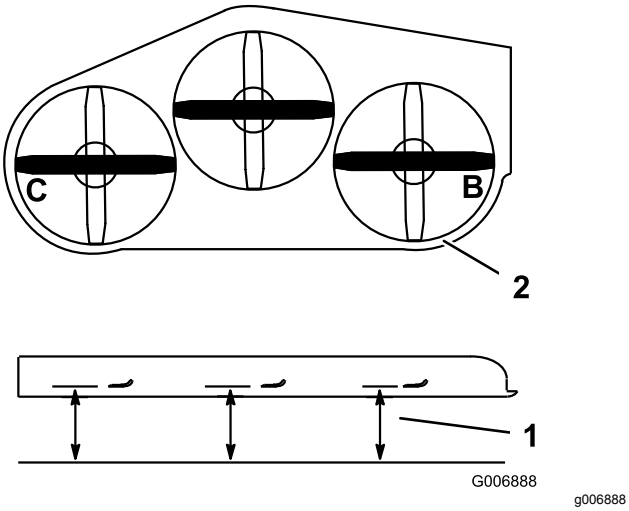

Figure 78

1. Measure from a level surface
2. Measure the blade at points **B** and **C**

5. The difference between measurements **B** and **C** should be no more than 6 mm (1/4 inch).

   Note: If it is not correct, refer to Leveling the Mower Deck from Side to Side (page 49).

Leveling the Mower Deck from Side to Side

1. Loosen the side nut and jam nut in the yokes you want to adjust (Figure 79).

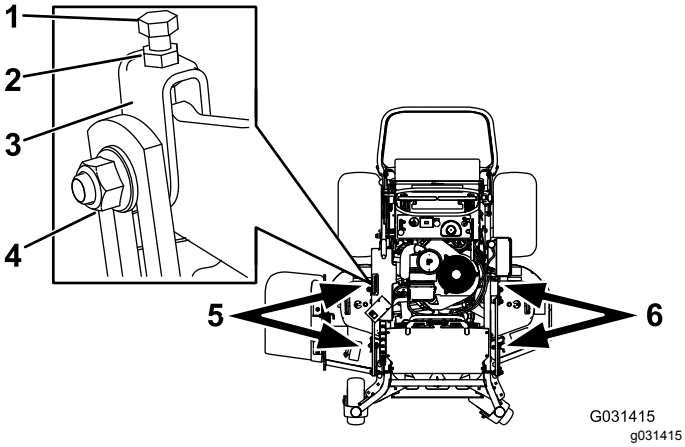

Figure 79

1. Top bolt
2. Jam nut
3. Yoke
4. Side nut
5. Adjust these yokes to adjust the right side of the mower deck.
6. Adjust these yokes to adjust the left side of the mower deck.

2. Rotate the top bolt of the yokes to adjust the height of the mower deck (Figure 79).

   Note: Rotate the bolts clockwise to raise the deck; rotate the bolt counterclockwise to lower it.

3. Tighten the jam nuts and side bolts.
4. Check the side-to-side height; refer to Checking the Mower Deck Side-to-Side Height (page 48).

Checking the Mower Deck Front-to-Rear Pitch

1. Adjust the tire pressure in the rear tires to the correct specifications.
2. Position 1 blade front-to-rear. Measure at **A** and **B** locations from a level surface to the cutting edge of the blade tips (Figure 80).

   Note: The mower blade should be 6 mm (1/4 inch) lower in front at **A** than in the rear at **B**.

3. Rotate the blades and repeat for other blades.

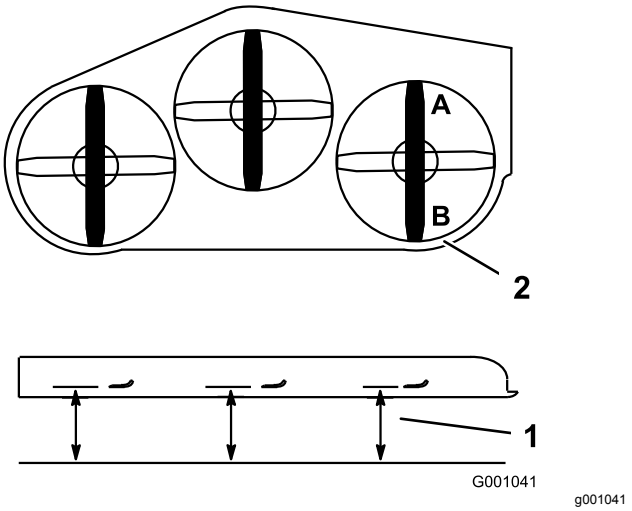

Figure 80

1. Measure the blade at points **A** and **B**
2. Measure from a level surface

4. If the front-to-rear pitch is not correct, refer to Leveling the Mower Deck from Front to Rear (page 49).

Leveling the Mower Deck from Front to Rear

1. Loosen the jam nut and side bolt in the yokes that you want to adjust (Figure 81).

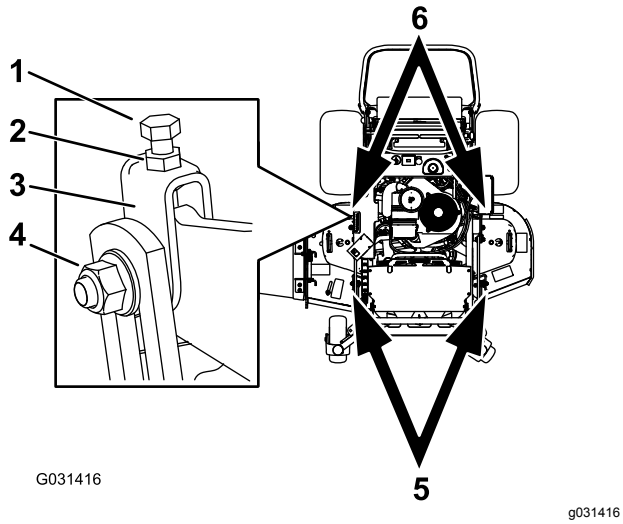

Figure 81

1. Top bolt
2. Jam nut
3. Yoke
4. Side nut
5. Adjust these yokes to adjust the front side of the mower deck.
6. Adjust these yokes to adjust the rear side of the mower deck.

2. Rotate the top bolt of the yokes to adjust the height of the mower deck (Figure 81).

   Note: Rotate the bolt clockwise to raise the deck; rotate the bolt counterclockwise to lower it.
3. Tighten the jam nuts and side bolts.
4. Check the front-to-rear pitch; refer to Checking the Mower Deck Front-to-Rear Pitch (page 49).

Matching the Height-of-Cut

1. Check the rear tire pressure.
2. Set the height-of-cut to the 7.6 cm (3 inches) position; refer to Adjusting the Height-of-Cut (page 19).
3. With the machine on level surface, position 1 blade front-to-rear.
4. Measure at **A**, and from a level surface to the cutting edge of the blade tips (Figure 82).

   Note: The measurement should be 7.6 cm (3 inches).

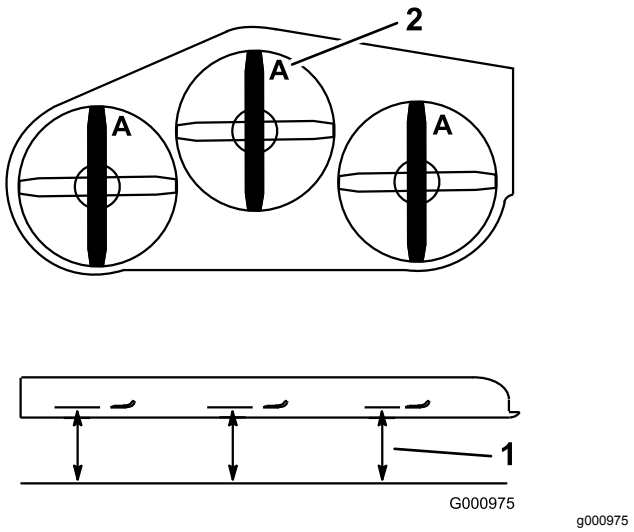

Figure 82

1. Measure from a level surface
2. Measure the blade at point **A**

5. If the measurement is not correct, locate the front 2 yokes on the machine (Figure 81).
6. Loosen the side bolt and jam nut of the yokes.
7. Adjust the top bolt of the yokes until the blade tips match 7.6 cm (3 inches).
8. Tighten the jam nuts and side bolts.

Adjusting the Deck-Lift Spring

Note: Adjusting the compression spring alters how much the deck floats and the amount of effort needed to lift the deck when using the height-of-cut lever.

- More spring compression reduces the lever lift force required and causes the deck to float more.
- Less spring compression increases the lever lift force required and causes the deck to float less.

1. Raise the height-of-cut lever and lock it into the transport position.
2. Check the distance between the spring nut and the rear side of the welded mount bracket (Figure 83).
3. Ensure that the length is between 47 to 50 mm (1.8 to 2 inches) (Figure 83).
4. If needed, adjust the distance by adjusting the bolt on the front of the mount bracket (Figure 83).

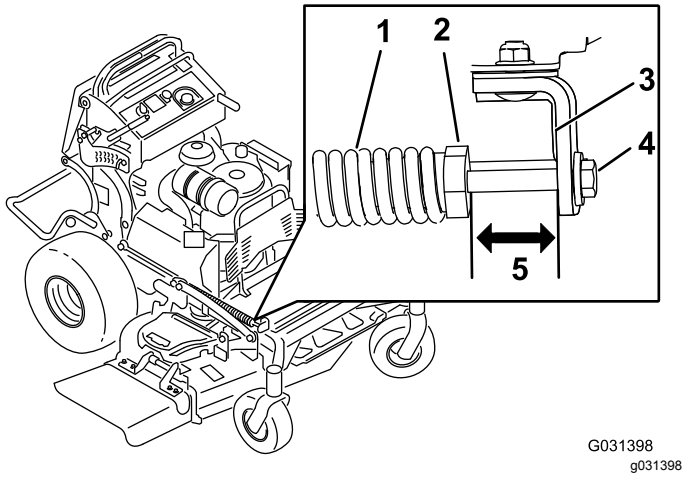

Figure 83

1. Deck-lift spring
2. Spring nut
3. Rear side of the mount bracket
4. Adjustment bolt
5. Length is between 47 to 50 mm (1.8 to 2 inches).

5. Repeat this procedure for the opposite deck-lift spring.

Replacing the Grass Deflector

⚠ WARNING

An uncovered discharge opening could allow the machine to throw objects toward you or bystanders, resulting in serious injury. Also, contact with the blade could occur.

Do not operate the machine unless you install a cover plate, a mulch plate, grass deflector, or bagger.

1. Remove the locknut, bolt, spring, and spacer holding the deflector to the pivot brackets (Figure 84).

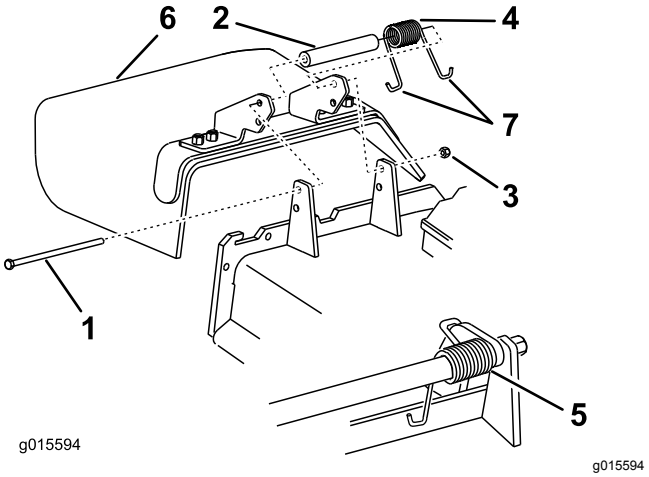

Figure 84

1. Bolt
2. Spacer
3. Locknut
4. Spring
5. Spring (installed)
6. Grass deflector
7. **J**-hook end of the spring

2. Remove the damaged or worn grass deflector.
3. Place the spacer and the spring onto the grass deflector.
4. Place 1 **J**-hook end of the spring behind the deck edge.

   Note: Make sure that 1 **J**-hook end of spring is installed behind deck edge before installing the bolt as shown in Figure 84.
5. Install the bolt and the nut.
6. Place 1 **J**-hook end of the spring around the grass deflector (Figure 84).

   Important: **The grass deflector must be able to rotate. Lift the deflector up to the full open position, and ensure that it rotates into the full-down position.**

Cleaning

Cleaning under the Mower Deck

Service Interval: Before each use or daily

Before each use or daily

Remove the grass buildup under the mower daily.

1. Park the machine on a level surface, disengage the PTO, move the motion-control levers to the NEUTRAL-LOCK position, and engage the parking brake.
2. Shut off the engine, remove the key, and wait for all moving parts to stop before leaving the operating position.
3. Raise the front of the machine and use jack stands to support the mower.

Disposing of Waste

Engine oil, batteries, hydraulic fluid, and engine coolant are pollutants to the environment. Dispose of these according to your state and local regulations.

Storage

Storage Safety

- Let the engine cool before storing the machine.
- Do not store the machine or fuel near flames or drain the fuel indoors.

Cleaning and Storage

Service Interval: Before storage

Before storage

1. Disengage the power takeoff (PTO), engage the parking brake, shut off the engine, and remove the key.
2. Remove grass clippings, dirt, and grime from the external parts of the entire machine, especially the engine.

   Important: **You can wash the machine with a mild detergent and water. Do not pressure-wash the machine. Avoid excessive use of water, especially near the drive system and engine. Pressure-washing can force dirt and water into critical parts, such as spindle bearings and electrical switches.**
3. Clean any dirt and chaff from the outside of the engine cylinder-head fins and blower housing.
4. Check the brake; refer to Testing the Parking Brake (page 41).
5. Service the air cleaner; refer to Servicing the Air Cleaner (page 28).
6. Grease the machine; refer to Greasing the Machine (page 26).
7. Change the engine oil; refer to Changing the Engine Oil (page 30).
8. Check the tire pressure; refer to Checking the Tire Pressure (page 37).
9. For long-term storage, do the following:
   A. Add fuel stabilizer/conditioner to the fuel in the tank as directed by the fuel stabilizer manufacturer.
   B. Run the engine to distribute the conditioned fuel through the fuel system for 5 minutes.
   C. Shut off the engine, allow it to cool, and drain the fuel tank; refer to Draining the Fuel Tank (page 32), or operate the engine until it shuts off.
   D. Start the engine and allow it to run until it shuts off. Repeat with the choke engaged (if applicable) until the engine does not start.
   E. Dispose of fuel properly; recycle it according to local regulations.

Important: **Do not store fuel containing stabilizer/conditioner longer than the duration recommended by the fuel-stabilizer manufacturer.**

10. Remove the spark plug(s) and check its condition; refer to Servicing the Spark Plug (page 31).
11. With the spark plug(s) removed from the engine, pour 15 ml (2 tablespoons) of engine oil into the spark-plug hole, and use the starter to crank the engine and distribute the oil inside the cylinder.
12. Install the spark plug(s) but do not connect the wire to the spark plug(s).
13. Check and tighten all fasteners. Repair or replace any part that is damaged or missing.
14. Paint all scratched or bare metal surfaces with paint from an Authorized Service Dealer.
15. Store the machine in a clean, dry, garage or storage area. Remove the key from the switch and store it in a memorable place. Cover the machine to protect it and keep it clean.

Troubleshooting

Problem	Possible Cause	Corrective Action
The engine does not start, starts hard, or fails to keep running.	1. The fuel tank is empty or the shutoff valve is closed. 2. A spark-plug wire is loose or disconnected. 3. A spark plug is pitted, fouled, or the gap is incorrect. 4. The air cleaner is dirty. 5. Dirt is in the fuel filter. 6. Dirt, water, or stale fuel is in the fuel system. 7. The gap between the safety-interlock switches is not correct.	1. Fill the fuel tank with fuel and open the valve 2. Install the wire on spark plug. 3. Install a new, correctly gapped spark plug. 4. Service the air-cleaner element. 5. Replace the fuel filter. 6. Contact an Authorized Service Dealer. 7. Contact an Authorized Service Dealer.
The engine loses power.	1. The engine load is excessive. 2. The air cleaner is dirty. 3. The oil level in the crankcase is low. 4. The cooling fins and air passages under the engine blower housing are plugged. 5. A spark plug is pitted, fouled, or the gap is incorrect. 6. The vent hole in the fuel cap is plugged. 7. Dirt is in the fuel filter. 8. Dirt, water, or stale fuel is in the fuel system.	1. Reduce the ground speed. 2. Service the air-cleaner element. 3. Add oil to the crankcase. 4. Remove the obstruction from the cooling fins and air passages. 5. Install a new, correctly gapped spark plug. 6. Clean or replace the fuel cap. 7. Replace the fuel filter. 8. Contact an Authorized Service Dealer.
The engine overheats.	1. The engine load is excessive. 2. The oil level in the crankcase is low. 3. The cooling fins and air passages under the engine blower housing are plugged.	1. Reduce the ground speed. 2. Add oil to the crankcase. 3. Remove the obstruction from the cooling fins and air passages.
The machine does not drive.	1. The hydraulic-fluid reservoir is low. 2. Air is in the hydraulic system. 3. A pump-drive belt slips. 4. A pump-drive belt idler spring is missing. 5. The pump-bypass valves are open.	1. Add hydraulic fluid to the reservoir. 2. Bleed the air out the hydraulic system. 3. Replace the pump-drive belt. 4. Replace the pump-drive belt idler spring. 5. Tighten the bypass valves. Torque to 12 to 15 N·m (9 to 11 ft-lb).
There is abnormal vibration.	1. Cutting blade(s) is/are bent or unbalanced. 2. A blade-mounting bolt is loose. 3. The engine-mounting bolts are loose. 4. An engine pulley, idler pulley, or blade pulley is loose. 5. An engine pulley is damaged. 6. A blade spindle is bent.	1. Install new cutting blade(s). 2. Tighten the blade-mounting bolt. 3. Tighten the engine-mounting bolts. 4. Tighten the appropriate pulley. 5. Contact an Authorized Service Dealer. 6. Contact an Authorized Service Dealer.

Problem	Possible Cause	Corrective Action
The cutting height is uneven.	1. Blade(s) are not sharp.	1. Sharpen the blade(s).
	2. Cutting blade(s) is/are bent.	2. Install new cutting blade(s).
	3. The mower deck is not level.	3. Level the mower deck side-to-side position.
	4. The mower deck pitch is wrong.	4. Adjust the front-to-rear pitch.
	5. The underside of mower deck is dirty.	5. Clean the underside of the mower deck.
	6. The tire pressure is not correct.	6. Adjust the tire pressure.
	7. A blade spindle is bent.	7. Contact an Authorized Service Dealer.
The blades do not rotate.	1. A pump-drive belt is worn, loose or broken.	1. Check the belt tension.
	2. A pump-drive belt is off pulley.	2. Install the drive belt and check the adjusting shafts and belt guides for the correct position.
	3. A mower-deck belt is worn, loose or broken.	3. Install the new deck belt.
	4. A mower-deck belt is off the pulley.	4. Install the deck pulley and check the idler pulley, idler arm and spring for the correct position and function.
	5. An idler spring is broken or missing.	5. Replace the spring.
	6. The electric clutch is out of adjustment.	6. Adjust the clutch air gap.
	7. The clutch connector or wire is damaged.	7. Contact an Authorized Service Dealer.
	8. The electric clutch is damaged.	8. Contact an Authorized Service Dealer.
	9. The safety-interlock system prevents blade rotation.	9. Contact an Authorized Service Dealer.
	10. The PTO switch is faulty.	10. Contact an Authorized Service Dealer.
The clutch does not engage.	1. The fuse is blown.	1. Replace the fuse. Check the coil resistance, battery charge, charging system, and wiring connections, and replace components if necessary.
	2. There is low voltage supply at the clutch.	2. Check the coil resistance, battery charge, charging system, and wiring connections and replace parts if necessary.
	3. The coil is damaged.	3. Replace the clutch.
	4. There is inadequate current supply.	4. Repair or replace the clutch lead wire or electrical system. Clean the connector contacts.
	5. The rotor/armature air gap is too large.	5. Remove the shim or replace the clutch.

Schematics

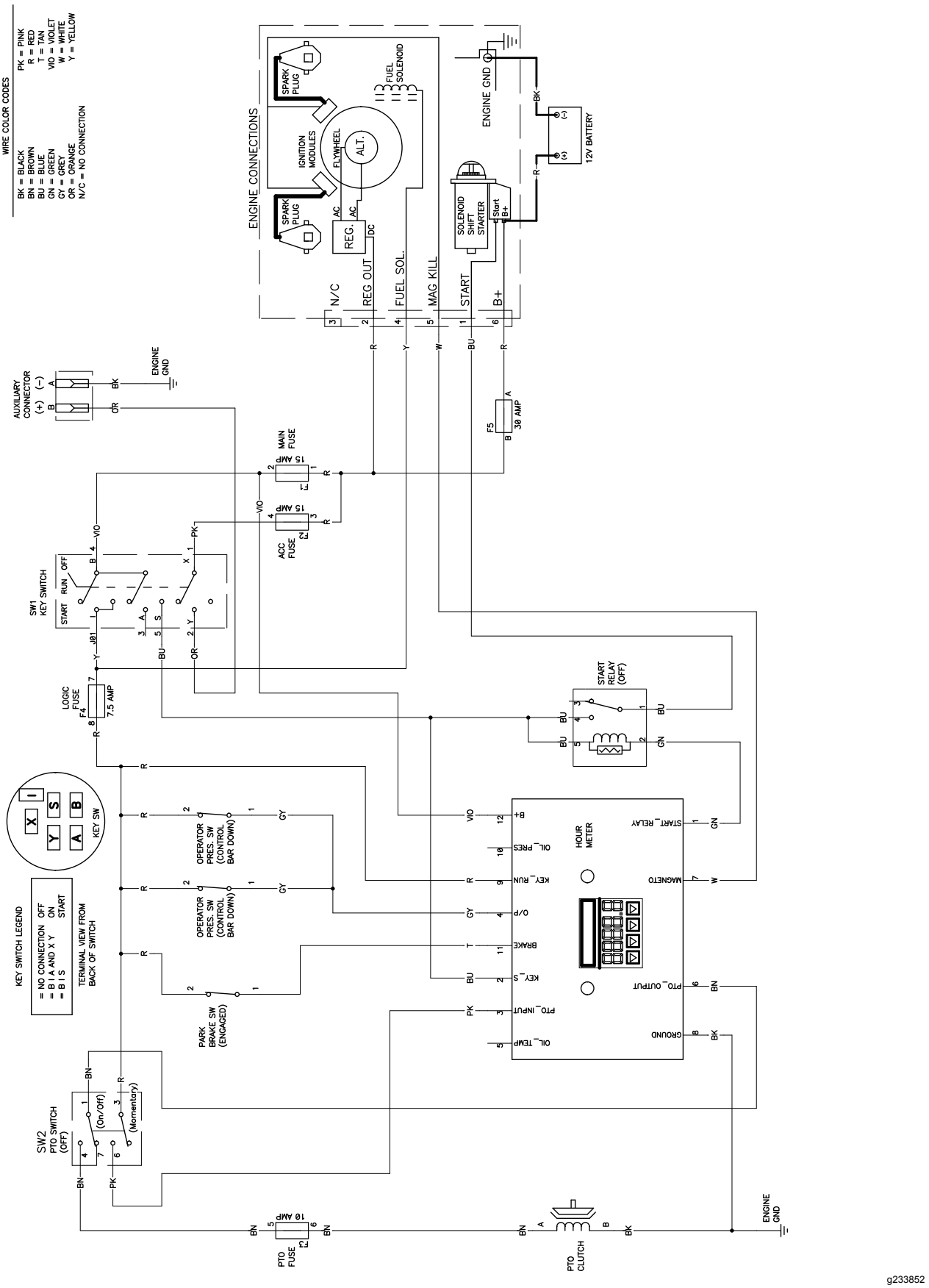

Electrical Schematic (Rev. A)

Notes:

Notes:

Notes:

California Proposition 65 Warning Information

What is this warning?

You may see a product for sale that has a warning label like the following:



WARNING: Cancer and Reproductive Harm—www.p65Warnings.ca.gov.

What is Prop 65?

Prop 65 applies to any company operating in California, selling products in California, or manufacturing products that may be sold in or brought into California. It mandates that the Governor of California maintain and publish a list of chemicals known to cause cancer, birth defects, and/or other reproductive harm. The list, which is updated annually, includes hundreds of chemicals found in many everyday items. The purpose of Prop 65 is to inform the public about exposure to these chemicals.

Prop 65 does not ban the sale of products containing these chemicals but instead requires warnings on any product, product packaging, or literature with the product. Moreover, a Prop 65 warning does not mean that a product is in violation of any product safety standards or requirements. In fact, the California government has clarified that a Prop 65 warning "is not the same as a regulatory decision that a product is 'safe' or 'unsafe.'" Many of these chemicals have been used in everyday products for years without documented harm. For more information, go to https://oag.ca.gov/prop65/faqs-view-all.

A Prop 65 warning means that a company has either (1) evaluated the exposure and has concluded that it exceeds the "no significant risk level"; or (2) has chosen to provide a warning based on its understanding about the presence of a listed chemical without attempting to evaluate the exposure.

Does this law apply everywhere?

Prop 65 warnings are required under California law only. These warnings are seen throughout California in a wide range of settings, including but not limited to restaurants, grocery stores, hotels, schools, and hospitals, and on a wide variety of products. Additionally, some online and mail order retailers provide Prop 65 warnings on their websites or in catalogs.

How do the California warnings compare to federal limits?

Prop 65 standards are often more stringent than federal and international standards. There are various substances that require a Prop 65 warning at levels that are far lower than federal action limits. For example, the Prop 65 standard for warnings for lead is 0.5 µg/day, which is well below the federal and international standards.

Why don't all similar products carry the warning?

- Products sold in California require Prop 65 labelling while similar products sold elsewhere do not.
- A company involved in a Prop 65 lawsuit reaching a settlement may be required to use Prop 65 warnings for its products, but other companies making similar products may have no such requirement.
- The enforcement of Prop 65 is inconsistent.
- Companies may elect not to provide warnings because they conclude that they are not required to do so under Prop 65; a lack of warnings for a product does not mean that the product is free of listed chemicals at similar levels.

Why does Toro include this warning?

Toro has chosen to provide consumers with as much information as possible so that they can make informed decisions about the products they buy and use. Toro provides warnings in certain cases based on its knowledge of the presence of one or more listed chemicals without evaluating the level of exposure, as not all the listed chemicals provide exposure limit requirements. While the exposure from Toro products may be negligible or well within the "no significant risk" range, out of an abundance of caution, Toro has elected to provide the Prop 65 warnings. Moreover, if Toro does not provide these warnings, it could be sued by the State of California or by private parties seeking to enforce Prop 65 and subject to substantial penalties.