Form No. 3425-458 Rev A

TORO®

Count on it.

Operator's Manual

GrandStand® Mower

With 36in or 40in TURBO FORCE® Cutting Unit

Model No. 74534—Serial No. 403365764 and Up
Model No. 74536—Serial No. 403365744 and Up
Model No. 79534—Serial No. 403260000 and Up

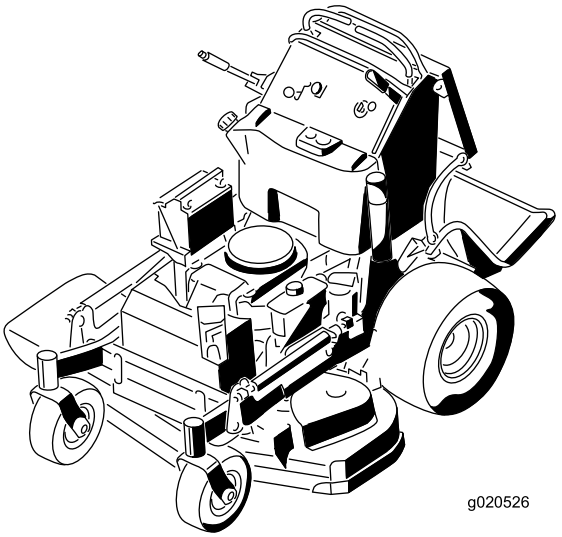

g020526

Register at www.Toro.com.
Original Instructions (EN)

3425-458 A

It is a violation of California Public Resource Code Section 4442 or 4443 to use or operate the engine on any forest-covered, brush-covered, or grass-covered land unless the engine is equipped with a spark arrester, as defined in Section 4442, maintained in effective working order or the engine is constructed, equipped, and maintained for the prevention of fire.

The enclosed engine owner's manual is supplied for information regarding the US Environmental Protection Agency (EPA) and the California Emission Control Regulation of emission systems, maintenance, and warranty. Replacements may be ordered through the engine manufacturer.

⚠ WARNING

CALIFORNIA
Proposition 65 Warning

The engine exhaust from this product contains chemicals known to the State of California to cause cancer, birth defects, or other reproductive harm.

Battery posts, terminals, and related accessories contain lead and lead compounds, chemicals known to the State of California to cause cancer and reproductive harm. Wash hands after handling.

Use of this product may cause exposure to chemicals known to the State of California to cause cancer, birth defects, or other reproductive harm.

Introduction

This rotary-blade, stand-on lawn mower is intended to be used by professional, hired operators. It is designed primarily for cutting grass on well-maintained lawns on residential or commercial properties. It is not designed for cutting brush or for agricultural uses.

Read this information carefully to learn how to operate and maintain your product properly and to avoid injury and product damage. You are responsible for operating the product properly and safely.

You may contact Toro directly at www.Toro.com for product safety and operation training materials, accessory information, help finding a dealer, or to register your product.

Whenever you need service, genuine Toro parts, or additional information, contact an Authorized Service Dealer or Toro Customer Service and have the model and serial numbers of your product ready. Figure 1 identifies the location of the model and serial numbers on the product. Write the numbers in the space provided.

Important: **With your mobile device, you can scan the QR code on the serial number decal (if equipped) to access warranty, parts, and other product information.**

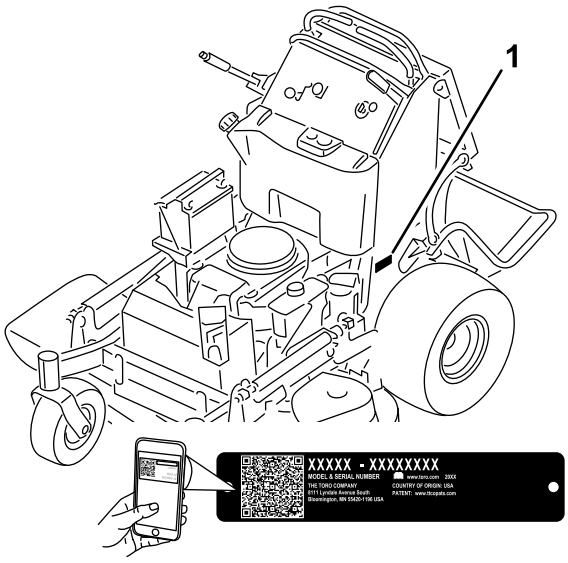

g265260

Figure 1

1. Location of the model and serial numbers

Model No. _____

Serial No. _____

This manual identifies potential hazards and has safety messages identified by the safety-alert symbol (Figure 2), which signals a hazard that may cause serious injury or death if you do not follow the recommended precautions.



g000502

Figure 2

1. Safety-alert symbol

This manual uses 2 words to highlight information. **Important** calls attention to special mechanical information and **Note** emphasizes general information worthy of special attention.

© 2018—The Toro® Company
8111 Lyndale Avenue South
Bloomington, MN 55420

Contact us at www.Toro.com.
Printed in the USA
All Rights Reserved

Contents

Safety 4
General Safety 4
Safety and Instructional Decals 4
Product Overview 8
Controls 8
Specifications 9
Attachments/Accessories 9
Before Operation 10
Before Operation Safety 10
Adding Fuel 10
Performing Daily Maintenance 11
Breaking in a New Machine 11
Using the Safety-Interlock System 11
During Operation 12
During Operation Safety 12
Operating the Parking Brake 13
Operating the PTO 14
Operating the Throttle 14
Operating the Choke 14
Operating the Ignition Switch 15
Starting the Engine 15
Shutting Off the Engine 16
Operating the Platform 16
Driving Forward or Backward 17
Side Discharging or Mulching the Grass 18
Adjusting the Height of Cut 18
Adjusting the Flow Baffle 19
Positioning the Flow Baffle 19
Using Weights 20
After Operation 20
After Operation Safety 20
Using the Fuel-Shutoff Valve 20
Pushing the Machine by Hand 21
Transporting the Machine 22
Maintenance 24
Maintenance Safety 24
Recommended Maintenance Schedule(s) 24
Pre-Maintenance Procedures 25
Raising the Mower for Access 25
Releasing the Cushion for Rear Access 27
Lubrication 27
Greasing the Machine 27
Greasing the Front Caster Pivots 28
Greasing the Caster-Wheel Hubs 28
Engine Maintenance 29
Engine Safety 29
Servicing the Air Cleaner 29
Servicing the Engine Oil 30
Servicing the Spark Plug 32
Checking the Spark Arrester 33
Fuel System Maintenance 33
Draining the Fuel Tank 33
Replacing the Fuel Filter 34
Electrical System Maintenance 35
Electrical System Safety 35
Servicing the Battery 35
Servicing the Fuses 37
Drive System Maintenance 37
Adjusting the Tracking 37
Adjusting the Proximity Switch 38
Checking the Tire Pressure 39
Adjusting the Caster-Pivot Bearing 39
Adjusting the Electric Clutch 39
Checking the Wheel-Lug Nuts 40
Cooling System Maintenance 40
Cleaning the Air-Intake Screen 40
Cleaning the Cooling System 40
Brake Maintenance 41
Testing the Parking Brake 41
Checking the Brake Clearance 41
Adjusting the Brakes 42
Belt Maintenance 43
Checking the Belts 43
Replacing the Mower-Deck Belt 43
Replacing the Pump-Drive Belt 44
Controls System Maintenance 45
Adjusting the Right Motion-Control Lever 45
Adjusting the Neutral Position for the Motion-Control Levers 45
Hydraulic System Maintenance 47
Hydraulic System Safety 47
Hydraulic System Specifications 47
Checking the Hydraulic Fluid 47
Replacing the Hydraulic Fluid 47
Replacing the Hydraulic Filter 48
Bleeding the Hydraulic System 49
Checking the Hydraulic Hoses 49
Mower Deck Maintenance 50
Servicing the Cutting Blades 50
Leveling the Mower Deck 52
Replacing the Grass Deflector 55
Cleaning 56
Cleaning under the Mower Deck 56
Disposing of Waste 56
Storage 57
Storage Safety 57
Cleaning and Storage 57
Troubleshooting 58
Schematics 60

Safety

This machine has been designed in accordance with ANSI B71.4-2017.

General Safety

This product is capable of amputating hands and feet and of throwing objects. Always follow all safety instructions to avoid serious personal injury.

- Read and understand the contents of this *Operator's Manual* before starting the engine.
- Do not put your hands or feet near moving components of the machine.
- Do not operate the machine without all guards and other safety protective devices in place and functioning properly on the machine.
- Keep clear of the discharge opening.
- Keep bystanders and children out of the operating area. Do not allow children to operate the machine. Allow only people who are responsible, trained, familiar with the instructions, and physically capable to operate the machine.
- Stop the machine, shut off the engine, and remove the ignition key before servicing, fueling, or unclogging the machine.

Improperly using or maintaining this machine can result in injury. To reduce the potential for injury, comply with these safety instructions and always pay attention to the safety-alert symbol ⚠, which means Caution, Warning, or Danger—personal safety instruction. Failure to comply with these instructions may result in personal injury or death.

Safety and Instructional Decals

Safety decals and instructions are easily visible to the operator and are located near any area of potential danger. Replace any decal that is damaged or missing.



decalbatterysymbols

Battery Symbols

Some or all of these symbols are on your battery.

1. Explosion hazard
2. No fire, open flames, or smoking
3. Caustic liquid/chemical burn hazard
4. Wear eye protection.
5. Read the *Operator's Manual*.
6. Keep bystanders away.
7. Wear eye protection—explosive gases can cause blindness and other injuries.
8. Battery acid can cause severe burns.
9. Flush eyes immediately with water and get medical help fast.
10. Contains lead; do not discard.

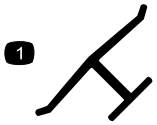

decaloemmarkt

Manufacturer's Mark

1. This mark indicates that the blade is identified as a part from the original machine manufacturer.

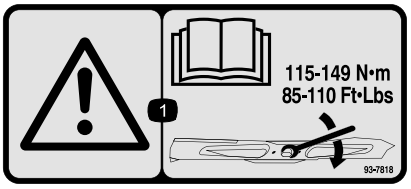

decal93-7818

93-7818

1. Warning—read the *Operator's Manual* for instructions on torquing the blade bolt/nut to 115 to 149 N·m (85 to 110 ft-lb).

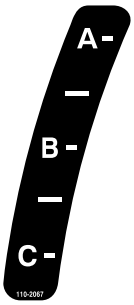

decal110-2067

110-2067

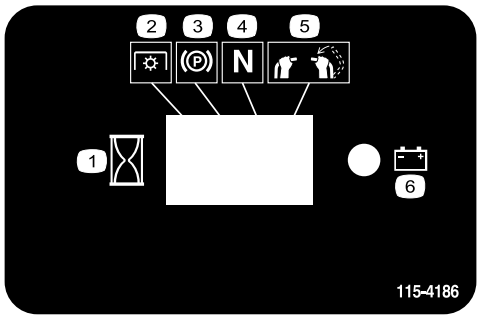

decal115-4186

115-4186

1. Interval
2. PTO
3. Parking brake
4. Neutral
5. Operator presence switch
6. Battery



decal115-4212

115-4212

1. Hydraulic fluid level
2. Read the *Operator's Manual*.
3. Warning—do not touch the hot surface.

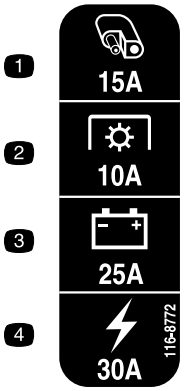

decal116-8772

116-8772

1. Accessory, 15A
2. PTO, 10A
3. Charge, 25A
4. Main, 30A

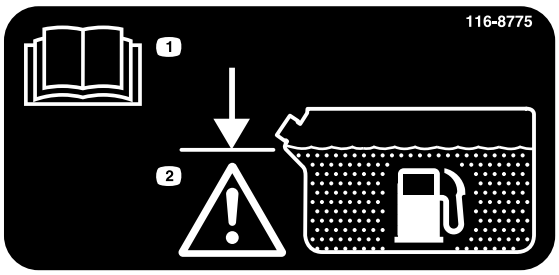

decal116-8775

116-8775

1. Read the *Operator's Manual.*
2. Warning—fill to the bottom of the filler neck; do not overfill the tank.

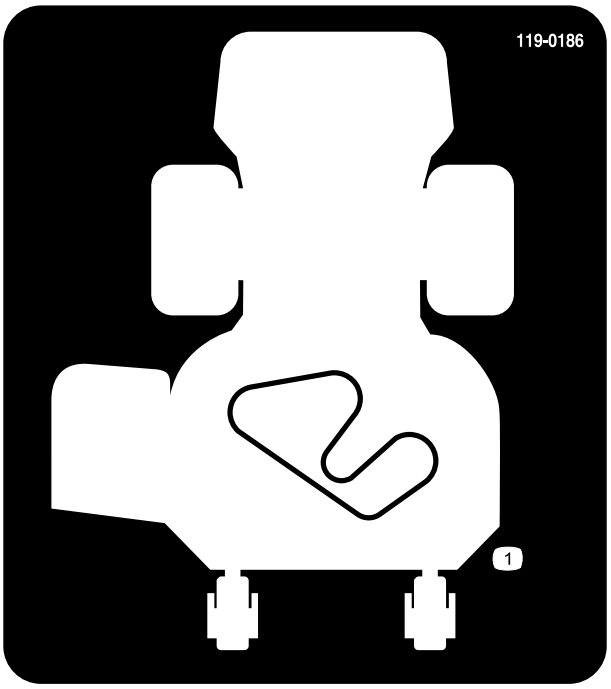

decal119-0186

119-0186

Models with 91cm Decks Only

1. Belt routing

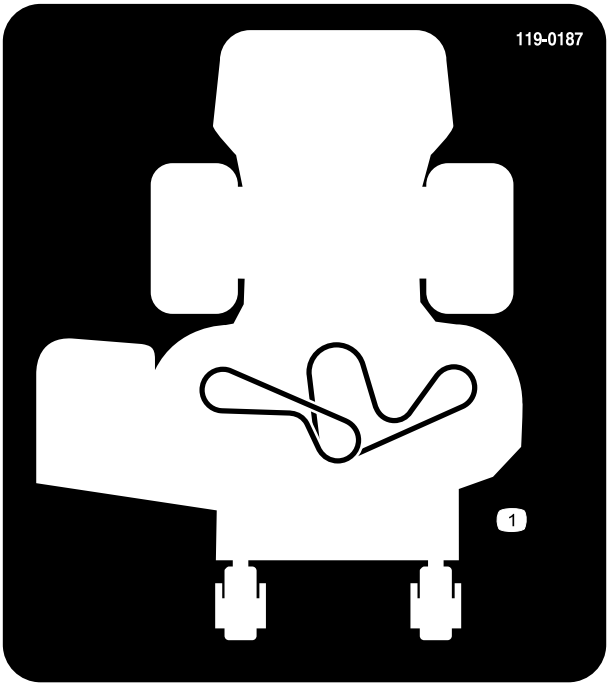

decal119-0187

119-0187

Models with a 102 cm or 40-Inch Deck

1. Belt routing

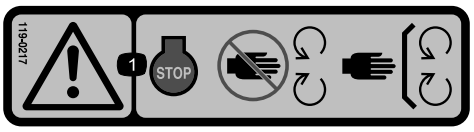

decal119-0217

119-0217

1. Warning—stop the engine; stay away from moving parts; keep all guards and shields in place.

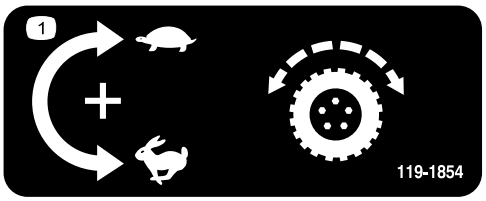

decal119-1854

119-1854

1. Adjustment knob for traction drive speed.

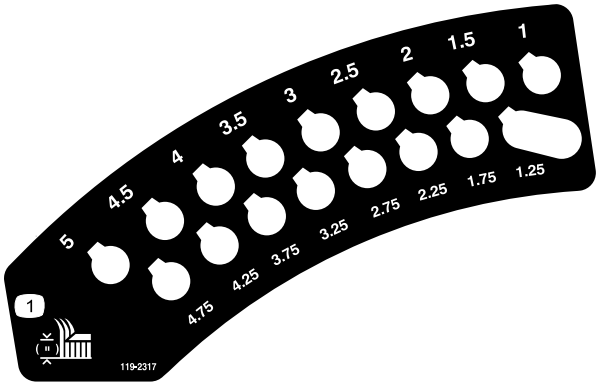

decal119-2317

119-2317

1. Height of cut

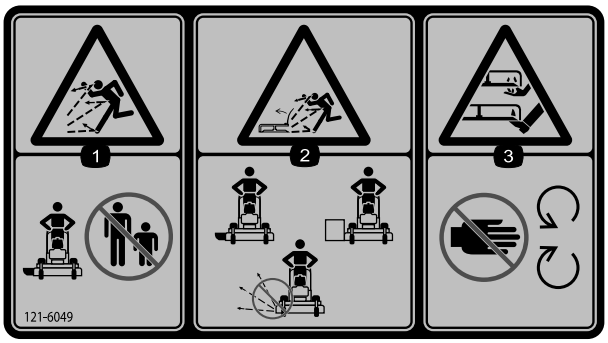

decal121-6049

121–6049

1. Thrown object hazard—keep bystanders away.
2. Thrown object hazard, mower—do not operate the mower with guards or shields removed.
3. Cutting/dismemberment hazard of hand or foot, mower blade—stay away from moving parts.

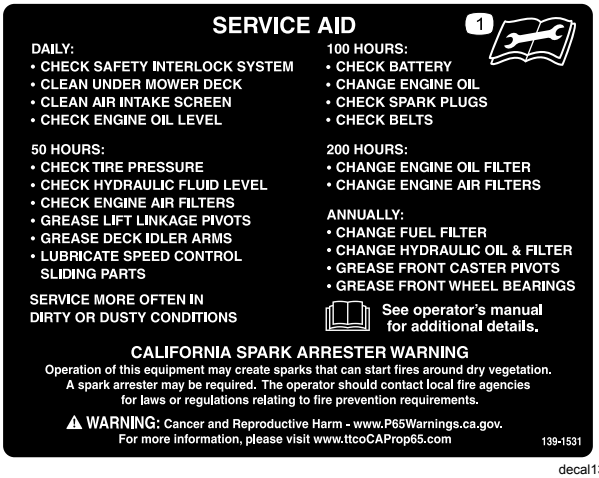

decal139-1531

139-1531

1. Refer to the *Operator's Manual* for service information.

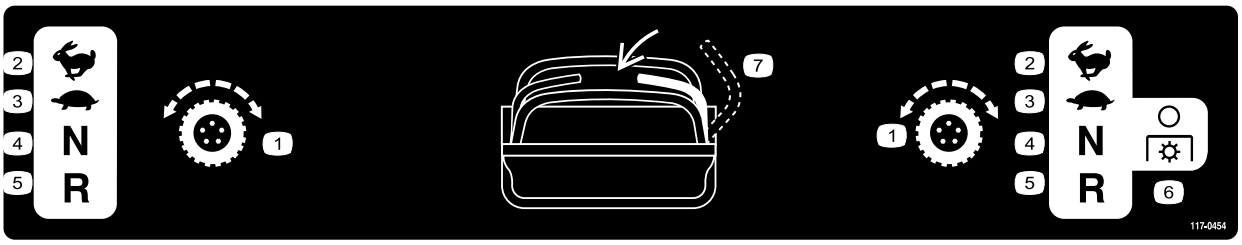

decal117-0454

117-0454

1. Traction control
2. Fast
3. Slow
4. Neutral
5. Reverse
6. PTO—disengage
7. Operator presence switch

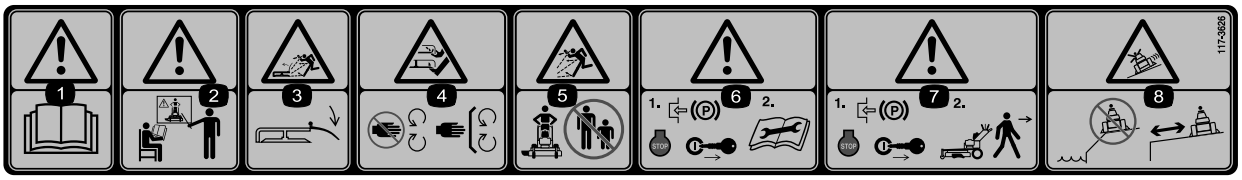

decal117-3626

117-3626

1. Warning—read the *Operator's Manual*.
2. Warning—do not operate this machine unless you are trained.
3. Thrown object hazard—lower the deflector before using the machine.
4. Cutting/dismemberment hazard of hand or foot—stay away from moving parts; keep all guards and shields in place.
5. Thrown object hazard—keep bystanders away.
6. Warning—engage the parking brake, shut off the engine, and remove the key before performing maintenance.
7. Warning—engage the parking brake, shut off the engine, and remove the key before leaving the machine.
8. Sliding and loss of control hazard—do not operate the machine near drop-offs or water; stay a safe distance from drop-offs.

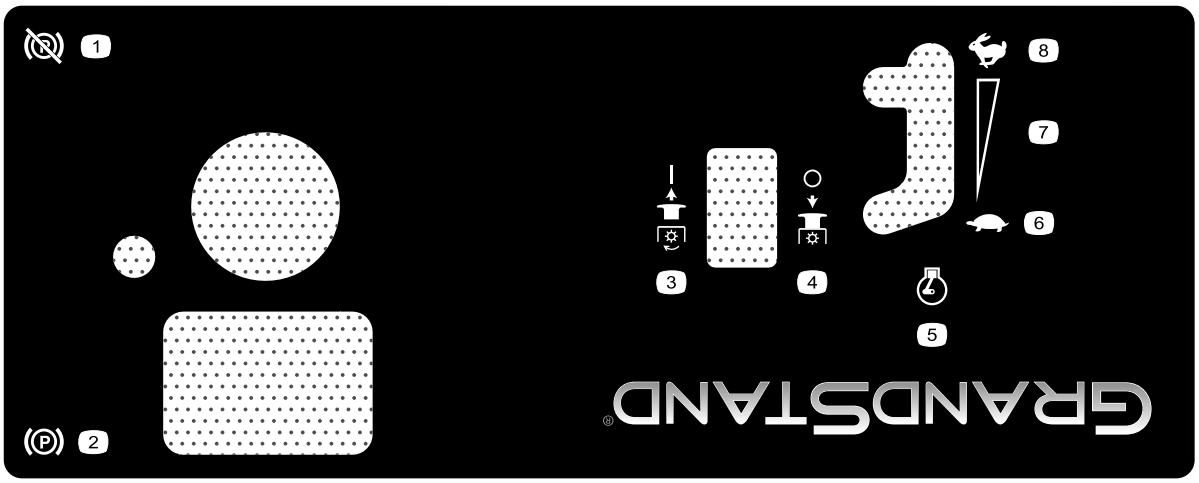

decal125-4679

125–4679

1. Parking brake—disengaged
2. Parking brake—engaged
3. PTO—engaged
4. PTO—disengaged
5. Engine speed
6. Slow
7. Continuous variable setting
8. Fast

Product Overview

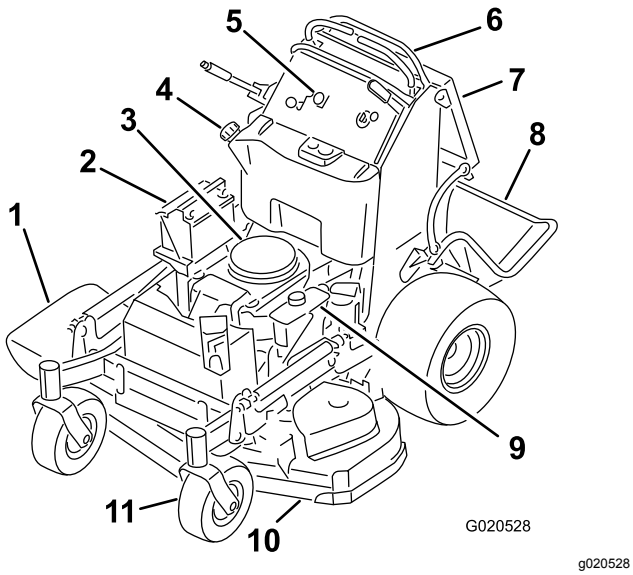

Figure 3

1. Side-discharge chute
2. Battery
3. Engine
4. Fuel tank
5. Control panel
6. Motion-control levers
7. Operator cushion
8. Platform (down position)
9. Hydraulic tank
10. Mower deck
11. Front caster wheel

Controls

Become familiar with all the controls (Figure 4) before you start the engine and operate the machine.

Control Panel

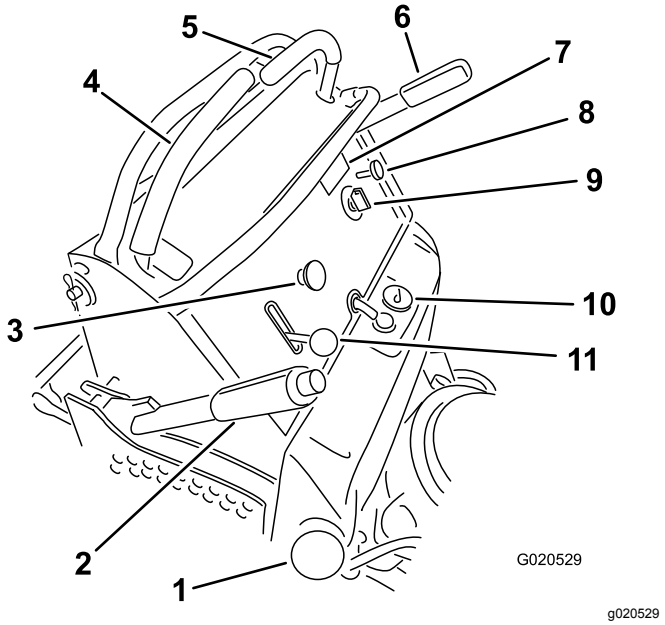

Figure 4

1. Fuel cap
2. Height-of-cut lever
3. Power-Takeoff switch (PTO)
4. Right motion-control lever
5. Left motion-control lever
6. Parking-brake lever
7. Hour meter
8. Choke control
9. Key switch
10. Fuel gauge
11. Throttle control

Hour Meter

The hour meter records the number of hours the engine has operated. It operates when the engine is running. Use these times for scheduling regular maintenance (Figure 5).

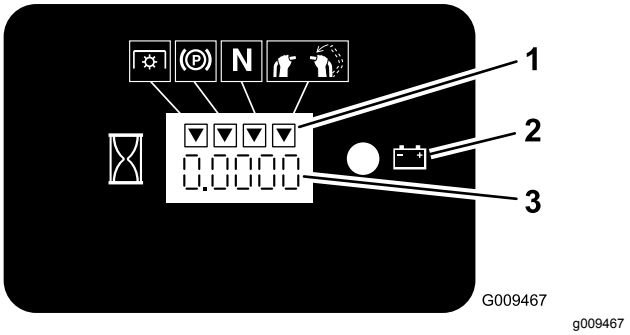

Figure 5

1. Safety-interlock symbols
2. Battery light
3. Hour meter

Fuel Gauge

The fuel gauge is located on the top, middle of the tank (Figure 4).

Safety-Interlock Indicators

Symbols on the hour meter indicate with a black triangle that the interlock component is in the correct position (Figure 5).

Battery-Indicator Light

If you turn the key to the ON position for a few seconds, the battery voltage displays in the area where the hours are normally displayed.

The battery light turns on when you turn the key to the ON position and when the charge is below the correct operating level (Figure 5).

Throttle Control

The throttle controls the engine speed, and it has a continuous-variable setting from the SLOW to FAST position (Figure 4).

Choke Control

Use the choke control to start a cold engine. Pull the choke control up to engage it. Push down on the choke control to disengage it.

Power-Takeoff Switch (PTO)

Use the power-takeoff switch (PTO) to engage and disengage the mower blades (Figure 4); refer to Operating the PTO (page 14).

Key Switch

The key switch, used to start and shut off the engine, has 3 positions: OFF, RUN, and START. Refer to Operating the Ignition Switch (page 15).

Motion-Control Levers

Use the motion-control levers to drive the machine forward, reverse, and turn either direction (Figure 4).

Fuel-Shutoff Valve

Close the fuel-shutoff valve when transporting or storing the machine; refer to Using the Fuel-Shutoff Valve (page 20).

Fuel-Shutoff Valve

Close the fuel-shutoff valve (located behind the operator cushion on the right hand side of fuel tank) when transporting or storing the mower.

Specifications

Note: Specifications and design are subject to change without notice.

	36in Mower Deck	40in Mower Deck
Cutting width	91 cm (36 inches)	102 cm (40 inches)
Width with deflector down	131 cm (52 inches)	142 cm (56 inches)
Length with platform down	188 cm (74 inches)	178 cm (70 inches)
Length with platform up	155 cm (61 inches)	145 cm (57 inches)
Height	122 cm (48 inches)	122 cm (48 inches)
Weight	343 kg (756 lb)	351 kg (773 lb)

Attachments/Accessories

A selection of Toro approved attachments and accessories is available for use with the machine to enhance and expand its capabilities. Contact your Authorized Service Dealer or authorized Toro distributor or go to www.Toro.com for a list of all approved attachments and accessories.

To ensure optimum performance and continued safety certification of the machine, use only genuine Toro replacement parts and accessories. Replacement parts and accessories made by other manufacturers could be dangerous, and such use could void the product warranty.

Operation

Before Operation

Before Operation Safety

General Safety

- Never allow children or untrained people to operate the machine. Local regulations may restrict the age of the operator. The owner is responsible for training all operators and mechanics.
- Become familiar with the safe operation of the equipment, operator controls, and safety signs.
- Know how to stop the machine and shut off the engine quickly.
- Check that operator-presence controls, safety switches, and guards are attached and functioning properly. Do not operate the machine unless they are functioning properly.
- Before mowing, always inspect the machine to ensure that the blades, blade bolts, and cutting assemblies are in good working condition.
- Inspect the area where you will use the machine and remove all objects that the machine could throw.
- Evaluate the terrain to determine the appropriate equipment and any attachments or accessories required to operate the machine properly and safely.

Fuel Safety

- Fuel is extremely flammable and highly explosive. A fire or explosion from fuel can burn you and others and can damage property.
  - To prevent a static charge from igniting the fuel, place the container and/or machine directly on the ground before filling, not in a vehicle or on an object.
  - Fill the fuel tank outdoors, in an open area, when the engine is cold. Wipe up any fuel that spills.
  - Do not handle fuel when smoking or around an open flame or sparks.
  - Do not remove the fuel cap or add fuel to the tank while the engine is running or hot.
  - If you spill fuel, do not attempt to start the engine. Avoid creating a source of ignition until the fuel vapors have dissipated.
  - Store fuel in an approved container and keep it out of the reach of children.
- Fuel is harmful or fatal if swallowed. Long-term exposure to vapors can cause serious injury and illness.
  - Avoid prolonged breathing of vapors.
  - Keep your hands and face away from the nozzle and the fuel-tank opening.
  - Keep fuel away from your eyes and skin.
- Do not store the machine or fuel container where there is an open flame, spark, or pilot light, such as on a water heater or on other appliances.
- Do not fill containers inside a vehicle or on a truck or trailer bed with a plastic liner. Always place containers on the ground, away from your vehicle before filling.
- Remove the equipment from the truck or trailer and refuel it while it is on the ground. If this is not possible, then refuel from a portable container rather than a fuel-dispenser nozzle.
- Do not operate the machine without the entire exhaust system in place and in proper working condition.
- Keep the fuel-dispenser nozzle in contact with the rim of the fuel tank or container opening at all times until fueling is complete. Do not use a nozzle lock-open device.
- If you spill fuel on your clothing, change your clothing immediately. Wipe up any fuel that spills.
- Never overfill the fuel tank. Replace the fuel cap and tighten it securely.

Adding Fuel

Recommended Fuel

- For best results, use only clean, fresh (less than 30 days old), unleaded gasoline with an octane rating of 87 or higher ((R+M)/2 rating method).
- **Ethanol**: Gasoline with up to 10% ethanol (gasohol) or 15% MTBE (methyl tertiary butyl ether) by volume is acceptable. Ethanol and MTBE are not the same. Gasoline with 15% ethanol (E15) by volume is not approved for use. **Never use gasoline that contains more than 10% ethanol by volume**, such as E15 (contains 15% ethanol), E20 (contains 20% ethanol), or E85 (contains up to 85% ethanol). Using unapproved gasoline may cause performance problems and/or engine damage which may not be covered under warranty.

- **Do not** use gasoline containing methanol.
- **Do not** store fuel either in the fuel tank or fuel containers over the winter unless you use a fuel stabilizer.
- **Do not** add oil to gasoline.

Using Stabilizer/Conditioner

Use fuel stabilizer/conditioner in the machine to keep the fuel fresh longer when used as directed by the fuel-stabilizer manufacturer.

Important: **Do not use fuel additives containing methanol or ethanol.**

Add the amount of fuel stabilizer/conditioner to fresh fuel as directed by the fuel-stabilizer manufacturer.

Filling the Fuel Tank

1. Park the machine on a level surface, disengage the PTO, move the motion-control levers to the NEUTRAL-LOCK position, and engage the parking brake.
2. Shut off the engine, remove the key, and wait for all moving parts to stop before leaving the operating position.
3. Clean around the fuel-tank cap and remove the cap.
4. Fill the fuel tank to the bottom of the filler neck.

   Note: Do not fill the fuel tank completely full. The empty space in the tank allows the gasoline to expand.
5. Install the fuel-tank cap securely. Wipe up any spilled fuel.

Performing Daily Maintenance

Before starting the machine each day, perform the Each Use/Daily procedures listed in Maintenance (page 24).

Breaking in a New Machine

New engines take time to develop full power. Mower decks and drive systems have higher friction when new, placing additional load on the engine. Allow 40 to 50 hours of break-in time for new machines to develop full power and best performance.

Using the Safety-Interlock System

⚠ WARNING

If safety-interlock switches are disconnected or damaged, the machine could operate unexpectedly, causing personal injury.

- **Do not tamper with the interlock switches.**
- **Check the operation of the interlock switches daily, and replace any damaged switches before operating the machine.**

Understanding the Safety-Interlock System

The safety-interlock system is designed to prevent PTO from engaging unless you do 1 of the following:

- Move either motion-control lever to the center, unlocked position.
- Pull the PTO switch to the ON position.

The safety-interlock system is designed to stop the blades/attachment if you move or release both motion-control levers into the NEUTRAL-LOCK position.

The hour meter has symbols to notify the user when each interlock component is in the correct position. When the component is in the correct position, a triangle lights up in the corresponding square (Figure 6).

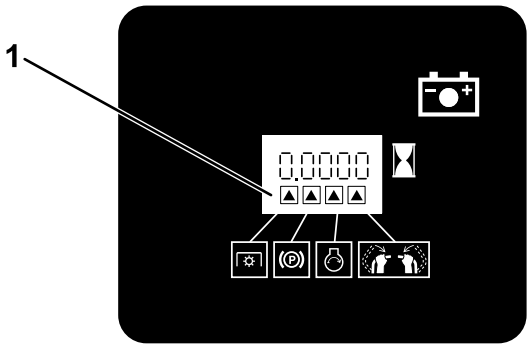

Figure 6

1. The triangles light up when the interlock components are in the correct position.

Testing the Safety-Interlock System

Service Interval: Before each use or daily

Test the safety-interlock system before you use the machine each time.

Note: If the safety system does not operate as described below, have an Authorized Service Dealer repair the safety system immediately.

1. Start the engine; refer to Starting the Engine (page 15).
2. Move the motion-control levers to the center, unlocked position.

   Note: The blades/attachment should stop and the engine should stop running.
3. Start the engine and disengage the parking brake.
4. Move either motion-control lever to the center, unlocked position.
5. Continue holding the motion-control lever in the center, unlocked position, pull up on the PTO switch, and release the switch.

   Note: The clutch and blades/attachment should engage.
6. Move or release the motion-control levers into the NEUTRAL-LOCK position.

   Note: The blades/attachment should stop and the engine should continue to run.
7. Push the PTO switch down and move either motion-control lever to the center, unlocked position.
8. Continue holding the motion-control lever in the center, unlocked position, pull up on the PTO switch, and release the switch.

   Note: The clutch and blades/attachment should engage.
9. Push the PTO switch down to the OFF position.

   Note: The blades/attachment should stop.
10. With the engine running, pull up the PTO switch and release it without holding either motion-control lever to the center, unlocked position.

    Note: The blades/attachment should not engage.

During Operation

During Operation Safety

General Safety

- The owner/operator can prevent and is responsible for accidents that may cause personal injury or property damage.
- Wear appropriate clothing, including eye protection; long pants; substantial, slip-resistant footwear; and hearing protection. Tie back long hair and do not wear loose clothing or loose jewelry.
- Use your full attention while operating the machine. Do not engage in any activity that causes distractions; otherwise, injury or property damage may occur.
- Do not operate the machine while ill, tired, or under the influence of alcohol or drugs.
- Never carry passengers on the machine and keep bystanders and pets away from the machine during operation.
- Operate the machine only in good visibility and appropriate weather conditions. Do not operate the machine when there is the risk of lightning.
- Wet grass or leaves can cause serious injury if you slip and contact the blade. Avoid mowing in wet conditions.
- Before you start the engine, ensure that all drives are in neutral, the parking brake is engaged, and you are in the operating position.
- Ensure that you have good footing while using this machine, especially when backing up.
- Keep your hands and feet away from the cutting units. Keep clear of the discharge opening at all times.
- Look behind and down before backing up to be sure of a clear path.
- Use extreme care when approaching blind corners, shrubs, trees, or other objects that may block your view.
- Stop the blades whenever you are not mowing.
- Stop the machine, remove the ignition key, and wait for all moving parts to stop before inspecting the mower deck or attachment after striking an object or if there is an abnormal vibration in the machine. Make all necessary repairs before resuming operation.
- Slow down and use caution when making turns and crossing roads and sidewalks with the machine. Always yield the right-of-way.
- Disengage the cutting unit and shut off the engine before adjusting the height of cut (unless you can adjust it from the operating position).
- Operate the engine only in well-ventilated areas. Exhaust gases contain carbon monoxide, which is lethal if inhaled.
- Never leave a running machine unattended.
- Before leaving the operating position (including to empty the catchers or to unclog the chute), do the following:
  - Park the machine on a level surface.

  - Disengage the power take-off.
  - Engage the parking brake.
  - Shut off the engine and remove the ignition key.
  - Wait for all moving parts to stop.
- Shut off the machine and disengage the drive to the cutting unit in the following situations:
  - Before fueling
  - Before clearing blockages
  - Before checking, cleaning, or maintaining the cutting unit
  - After striking a foreign object or if an abnormal vibration occurs. Inspect the cutting unit for damage and make repairs before starting and operating the machine
  - Before leaving the operating position
- Do not use the machine as a towing vehicle.
- Use only accessories and attachments approved by The Toro® Company.

Slope Safety

- Slopes are a major factor related to loss of control and rollover accidents, which can result in severe injury or death. You are responsible for safe slope operation. Operating the machine on any slope requires extra caution. Before using the machine on a slope, do the following:
  - Review and understand the slope instructions in the manual and on the machine.
  - Evaluate the site conditions of the day to determine if the slope is safe for machine operation. Use common sense and good judgment when performing this evaluation. Changes in the terrain, such as moisture, can quickly affect the operation of the machine on a slope.
- Operate across slopes, never up and down. Avoid operation on excessively steep or wet slopes.
- Identify hazards at the base of the slope. Do not operate the machine near drop-offs, ditches, embankments, water, or other hazards. The machine could suddenly roll over if a wheel goes over the edge or the edge collapses. Keep a safe distance (twice the width of the machine) between the machine and any hazard. Use a walk-behind machine or a handheld tool to operate in these areas.
- Avoid starting, stopping, or turning the machine on slopes. Avoid making sudden changes in speed or direction; turn slowly and gradually.
- Do not operate a machine under any conditions where traction, steering or stability is in question. Be aware that operating the machine on wet grass, across slopes or downhill may cause the machine to lose traction. Loss of traction to the drive wheels may result in sliding and a loss of braking and steering. The machine can slide even if the drive wheels are stopped.
- Remove or mark obstacles such as ditches, holes, ruts, bumps, rocks, or other hidden hazards. Tall grass can hide obstacles. Uneven terrain could overturn the machine.
- Use extra care while operating with accessories or attachments. These can change the stability of the machine and cause a loss of control. Follow directions for counterweights.
- If you lose control of the machine, step off and away from the direction of travel of the machine.

Operating the Parking Brake

Always engage the parking brake when you shut off the machine or leave it unattended. Before each use, check the parking brake for proper operation.

If the parking brake does not hold securely, adjust it; refer to Adjusting the Brakes (page 42).

Pull the parking-brake lever rearward to engage it (Figure 7).

Push the parking-brake lever forward to disengage it.

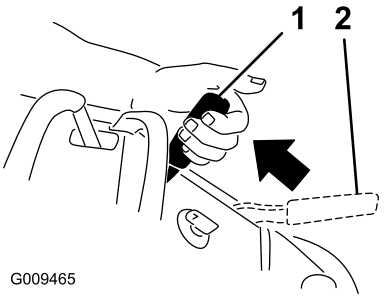

Figure 7

1. Parking brake—engaged
2. Parking brake—disengaged

Operating the PTO

Use the power-takeoff (PTO) switch in conjunction with the motion-control levers to engage and disengage mower blades or powered attachments.

Engaging the Power-Takeoff (PTO) Switch

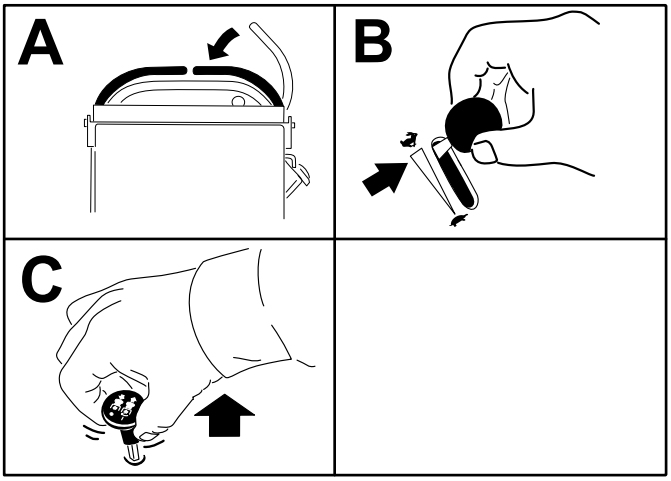

g216326

Figure 8

Disengaging the Power-Takeoff (PTO) Switch

Figure 9 and Figure 10 show 2 ways to disengage the PTO.

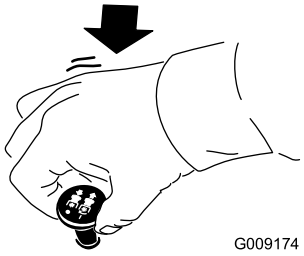

G009174

g009174

Figure 9

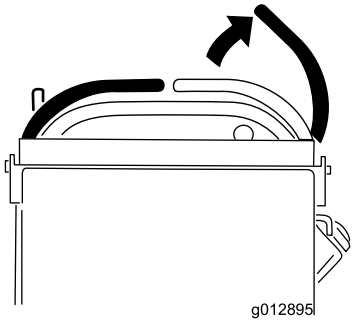

g012895

g012895

Figure 10

Operating the Throttle

You can move the throttle control between FAST and SLOW positions (Figure 11).

Always use the FAST position when engaging the PTO.

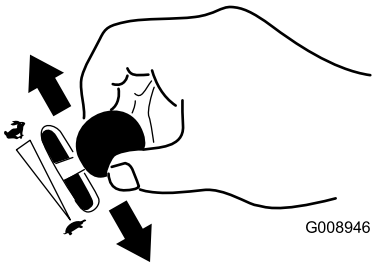

G008946

g008946

Figure 11

Operating the Choke

Use the choke to start a cold engine.

1. Pull up the choke knob to engage the choke before using the key switch (Figure 12).
2. Push down the choke knob to disengage the choke after the engine has started (Figure 12).

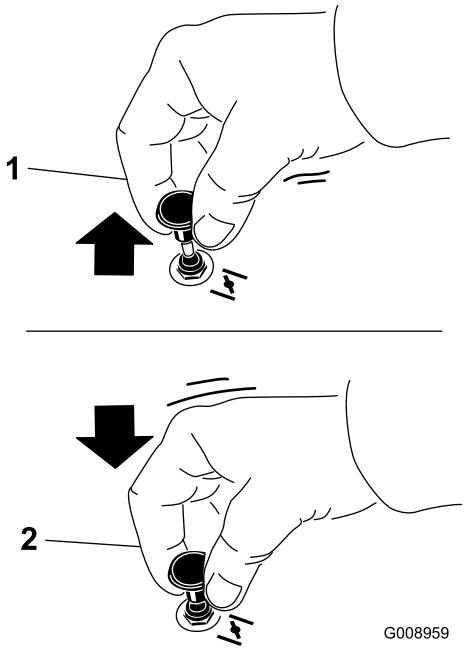

G008959

g008959

Figure 12

1. ON position
2. OFF position

Operating the Ignition Switch

Important: **Do not engage the starter for more than 5 seconds at a time. If the engine fails to start, wait 15 seconds between attempts. Failure to follow these instructions can burn out the starter motor.**

Note: You may need to repeat the cycle for starting the engine when you start it for the first time after you have filled a completely empty fuel system with fuel.

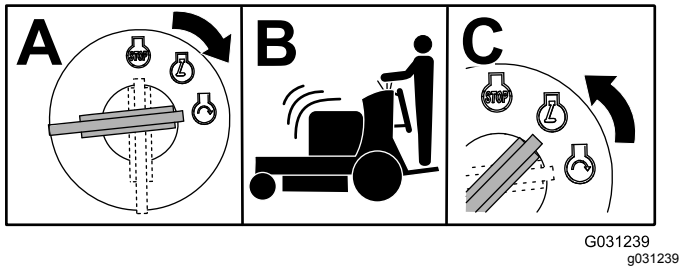

G031239
g031239

Figure 13

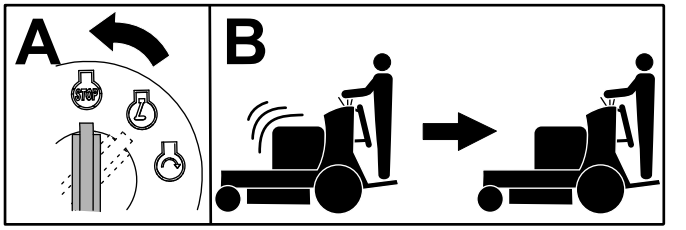

G031281
g031281

Figure 14

Starting the Engine

Important: **Do not engage the starter for more than 5 seconds at a time. If the engine fails to start, wait 15 seconds between attempts. Failure to follow these instructions can burn out the starter motor.**

Note: A warm or hot engine may not require choking.

Note: You may need to repeat the cycle for starting the engine when you start it for the first time after you have filled a completely empty fuel system with fuel.

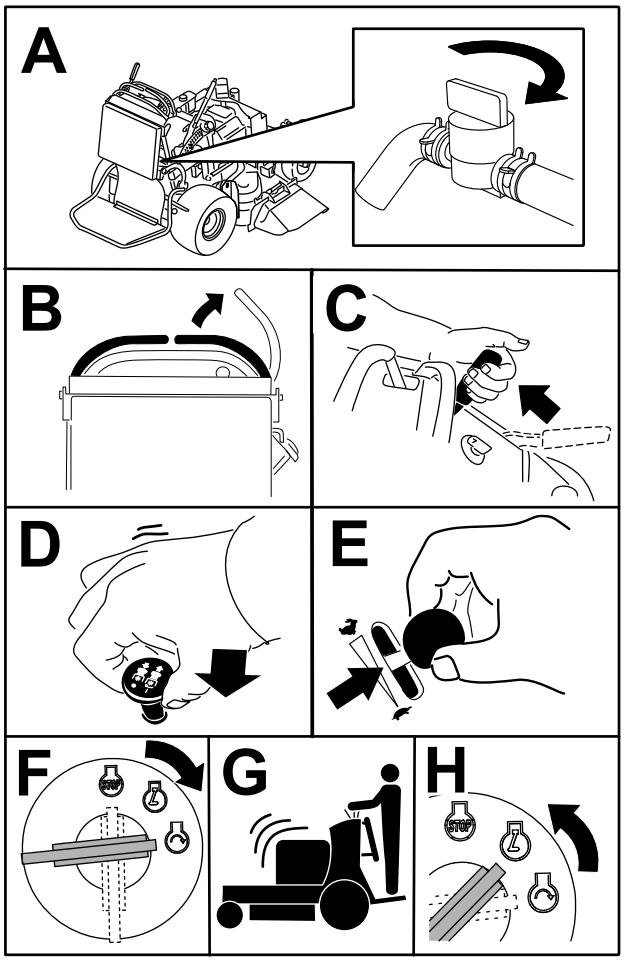

G032586
g032586

Figure 15

Shutting Off the Engine

⚠ CAUTION

Children or bystanders may be injured if they move or attempt to operate the machine while it is unattended.

Always remove the key and engage the parking brake when leaving the machine unattended.

Let the engine idle at slow throttle (turtle) for 60 seconds before turning the key switch to the OFF position.

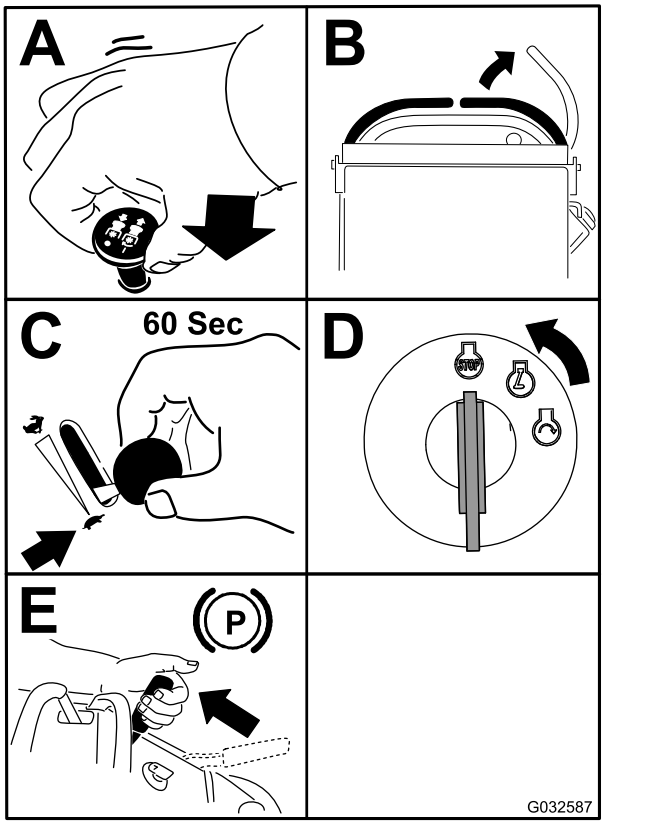

g032587

Figure 16

Important: **Make sure that the fuel-shutoff valve is closed before transporting or storing the machine to prevent a fuel leak. Before storing the machine, disconnect the spark plug(s) to prevent the possibility of accidental starting.**

Operating the Platform

You can use the machine with the platform in the up or down position. It is your preference on which position to use.

⚠ WARNING

The operator platform is heavy and may cause injury when you raise or lower it. Carefully lower or raise the operator platform, as suddenly dropping it could injure you.

- **Do not put your hands or fingers in the platform-pivot area when lowering or raising the operator platform.**
- **Make sure that the platform is supported when you pull the latch pin out.**
- **Make sure that the latch secures the platform when folding it up. Push it tight against the cushion for the latch pin to lock into place.**
- **Keep bystanders away from the machine when raising or lowering the platform.**

Operating the Machine with the Platform Up

Operate the machine with the platform up for the following conditions:

- Using the machine near drop-offs
- Using the machine in small areas where the machine is too large
- Areas with low-hanging branches or obstacles
- Loading the machine for transport
- Driving up slopes

To raise the platform, pull the back of the platform up so that the latch pin and knob lock it into place. Push it tight against the cushion for the latch pin to lock it into place.

Operating the Machine with the Platform Down

Operate the machine with the platform down for the following conditions:

- Using the machine in most areas
- Driving across slopes
- Driving down slopes

To lower the platform, push the platform forward against the cushion to release pressure on the latch pin, then pull the knob out and lower the platform (Figure 17).

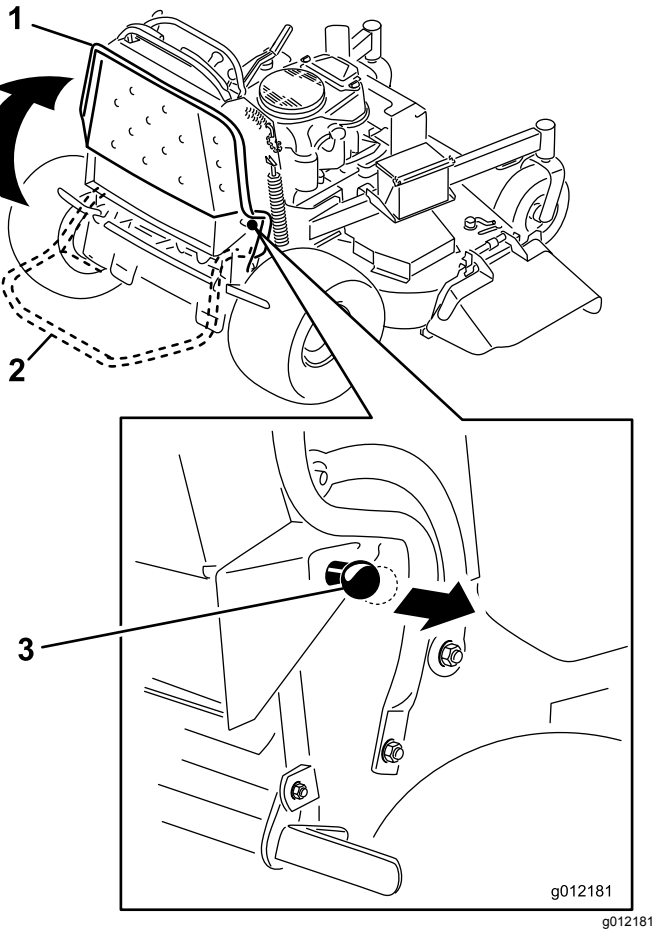

Figure 17

1. Platform up
2. Platform down
3. Pull the knob out to release the platform.

Driving Forward or Backward

The throttle control regulates the engine speed as measured in rpm (revolutions per minute). Place the throttle control in the FAST position for best performance.

⚠ CAUTION

The machine can spin very rapidly, and you may lose control of the machine, causing personal injury to you and damage to the machine.

Slow the machine down before making sharp turns.

Driving Forward

1. Disengage the parking brake; refer to Operating the Parking Brake (page 13).
2. Move the right motion-control lever to the center, unlocked position.

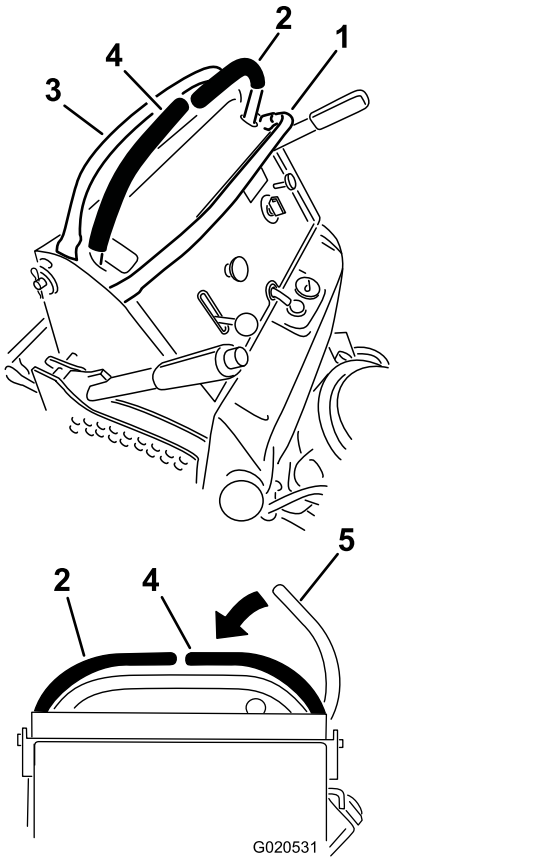

Figure 18

1. Front reference bar
2. Left motion-control lever
3. Rear reference bar
4. Right motion-control lever
5. Right motion-control lever in the NEUTRAL-LOCK position

3. Move the speed-control lever to the desired speed.
4. Slowly push the motion-control levers forward (Figure 19).

   Note: The engine shuts off if you move a motion-control lever with the parking brake engaged.

   Note: The farther you move the motion-control levers in either direction, the faster the machine moves in that direction.

   Note: To stop, pull the motion-control levers back to the NEUTRAL position.

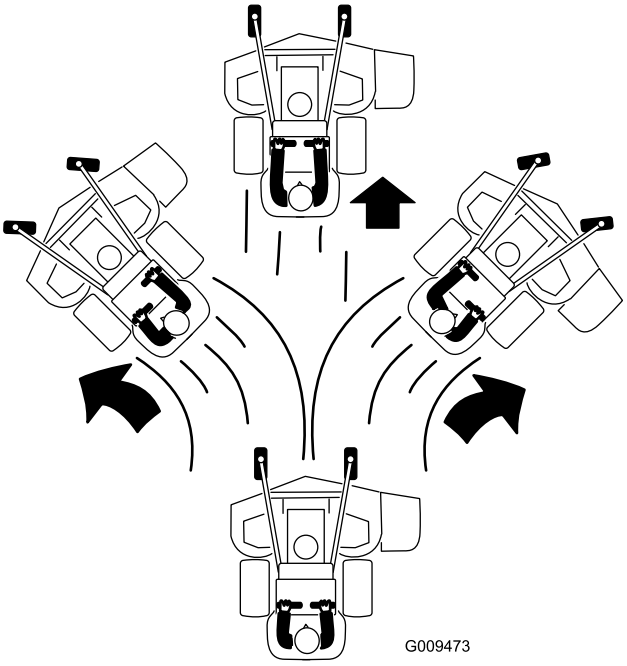

g009473

Figure 19

Driving Backward

1. Move the right motion-control lever to the center, unlocked position.
2. Slowly pull the motion-control levers rearward (Figure 20).

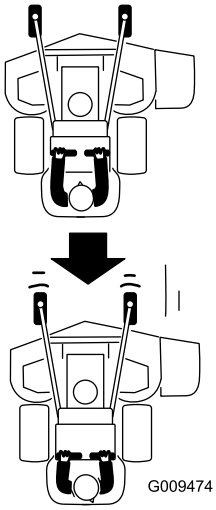

g009474

Figure 20

Side Discharging or Mulching the Grass

This machine has a hinged grass deflector that disperses clippings to the side and down toward the turf.

⚠ DANGER

Without the grass deflector, discharge cover, or complete grass catcher assembly mounted in place, you and others are exposed to blade contact and thrown debris. Contact with rotating mower blade(s) and thrown debris cause injury or death.

- **Do not remove the grass deflector from the machine, because the grass deflector routes material down toward the turf. If the grass deflector is ever damaged, replace it immediately.**
- **Never put your hands or feet under the machine.**
- **Never try to clear the discharge area or mower blades unless you release the bail and the power takeoff (PTO) is off. Rotate the key to the OFF position. Also remove the key and disconnect the wire(s) from the spark plug(s).**

Adjusting the Height of Cut

The height of cut can be adjusted from 25 to 127 mm (1 to 5 inches) in 6 mm (1/4 inch) increments.

1. Move the height-of-cut lever to the transport position (all the way up).
2. Rotate the pin 90 degrees and remove it from the height-of-cut bracket.
3. Select a hole in the height-of-cut bracket corresponding to the height-of-cut desired and insert the pin (Figure 21).
4. Push the button on top and lower the height-of-cut lever to the pin (Figure 21).

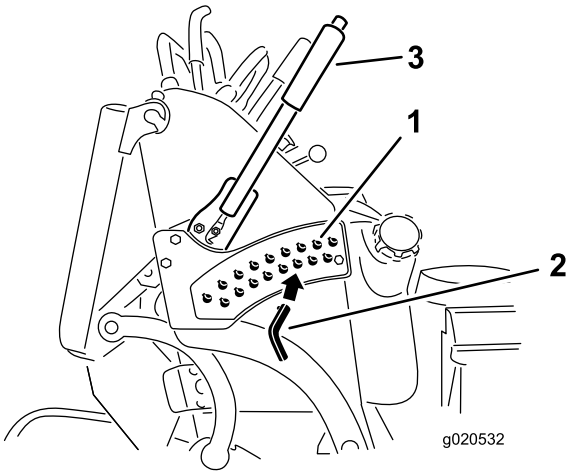

g020532

Figure 21

1. Height-of-cut holes
2. Height-of-cut pin
3. Height-of-cut lever

Adjusting the Flow Baffle

You can adjust the mower-discharge flow for different types of mowing conditions. Position the cam lock and baffle to provide the best quality of cut.

1. Disengage the PTO, move the motion-control levers to the NEUTRAL-LOCK position, and engage the parking brake.
2. Shut off the engine, remove the key, and wait for all moving parts to stop before leaving the operating position.
3. To adjust the baffle, loosen the nut (Figure 22).
4. Adjust the baffle and nut in the slot to the desired discharge flow and tighten the nut.

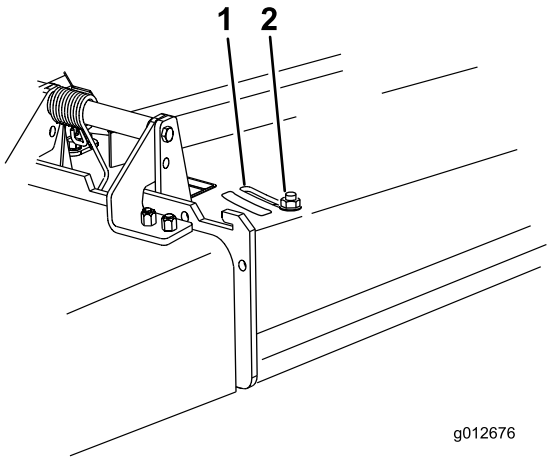

g012676

Figure 22

1. Slot
2. Nut

Positioning the Flow Baffle

The following figures are for recommended use only. Adjustments vary by grass type, moisture content, and the height of the grass.

Note: If the engine power draws down and the mower ground speed is the same, open the baffle.

Position A

This is the full, rear position (see Figure 23). Use this position for the following:

- In short, light grass mowing conditions
- In dry conditions
- Smaller grass clippings
- Propels grass clippings farther away from the mower

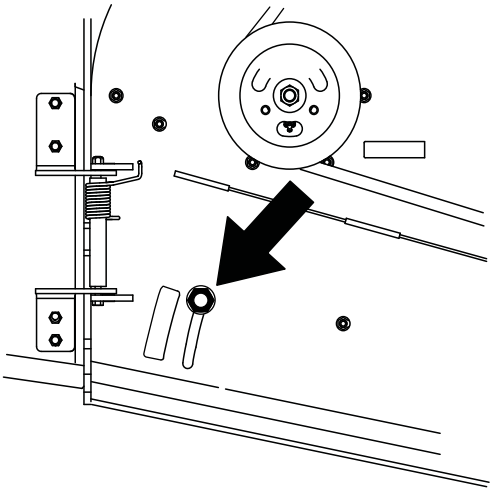

g012677

Figure 23

Position B

Use this position when bagging (Figure 24).

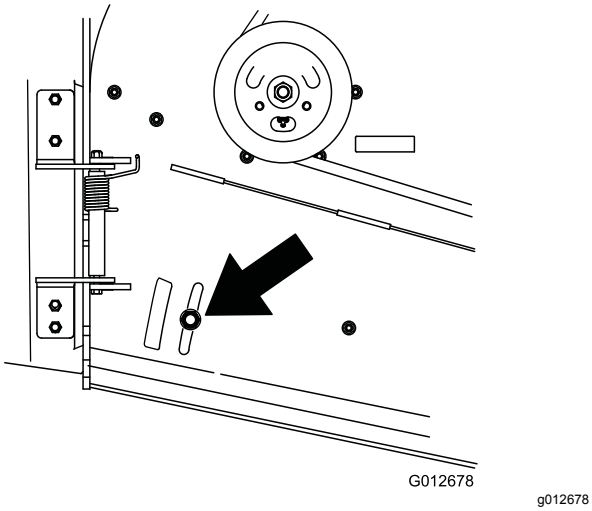

Figure 24

Position C

This is the full, open position (Figure 25). Use this position for the following:

- In tall, dense grass mowing conditions
- In wet conditions
- Lowers the engine-power consumption
- Allows increased ground speed in heavy conditions

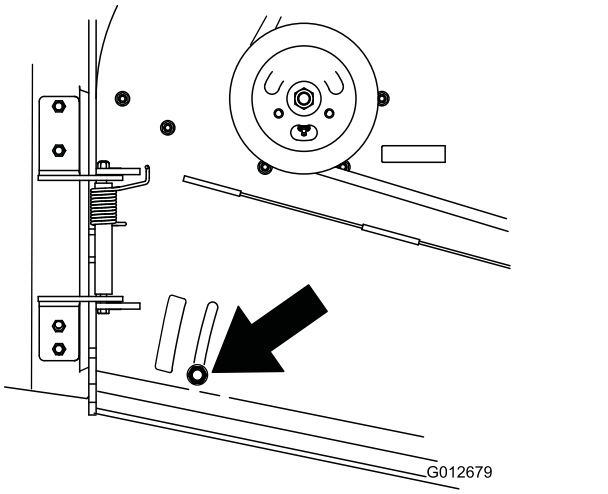

Figure 25

Using Weights

- Install weights to improve balance. You can add or remove weights to create optimized performance under different operating conditions and for your preference.
- Add or remove weights 1 at a time until you achieve the desired handling and balance.
- Refer to the *Operator's Manual* of attachments for recommended weights.

Note: Contact an Authorized Service Dealer to order a weight kit.

⚠ WARNING

Excessive weight changes can affect the handling and operation of the machine. This could cause serious injury to you or bystanders.

- **Make weight changes in small increments only.**
- **Evaluate the machine after each weight change to ensure that you can operate the machine safely.**

After Operation

After Operation Safety

General Safety

- Always shut off the machine, remove the ignition key, wait for all moving parts to stop, and allow the machine to cool before adjusting, servicing, cleaning, or storing it.
- Clean grass and debris from the cutting units, mufflers, and engine compartment to help prevent fires. Clean up oil or fuel spills.
- Shut off the fuel before storing or transporting the machine.
- Disengage the PTO whenever you are transporting or not using the machine.
- Never store the machine or fuel container where there is an open flame, spark, or pilot light, such as on a water heater or on other appliances.
- Use full-width ramps for loading the machine into a trailer or truck.
- Tie the machine down securely using straps, chains, cable, or ropes. Both front and rear straps should be directed down and outward from the machine.

Using the Fuel-Shutoff Valve

Close the fuel-shutoff valve for transport, maintenance, and storage (Figure 26).

Ensure that the fuel-shutoff valve is open when starting the engine.

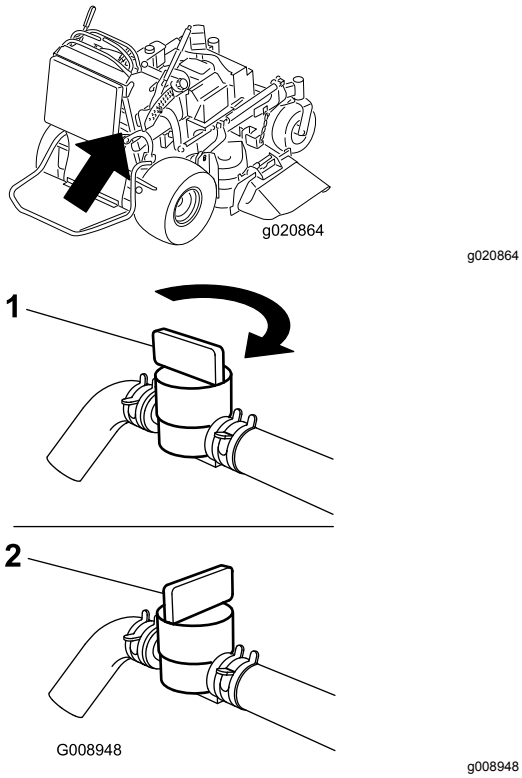

Figure 26

1. ON position
2. OFF position

Pushing the Machine by Hand

The bypass valves allow you to push the machine by hand without the engine running.

Important: **Always push the machine by hand. Do not tow the machine, because hydraulic damage may occur.**

Important: **Do not start or operate the machine with the bypass valves open. Damage to the system may occur.**

1. Disengage the PTO, move the motion-control levers to the NEUTRAL-LOCK position, and engage the parking brake.
2. Lower the mower deck to the lowest height of cut (HOC).

   Note: This allows access to the bypass valves.
3. Open the bypass valve on both pumps by turning them counterclockwise 1 to 2 turns (Figure 27).

   Note: This allows hydraulic fluid to bypass the pumps and the wheels to turn.

   Note: Rotate the bypass valves a maximum of 2 turns so that the valve does not come out of the body, causing fluid to run out.

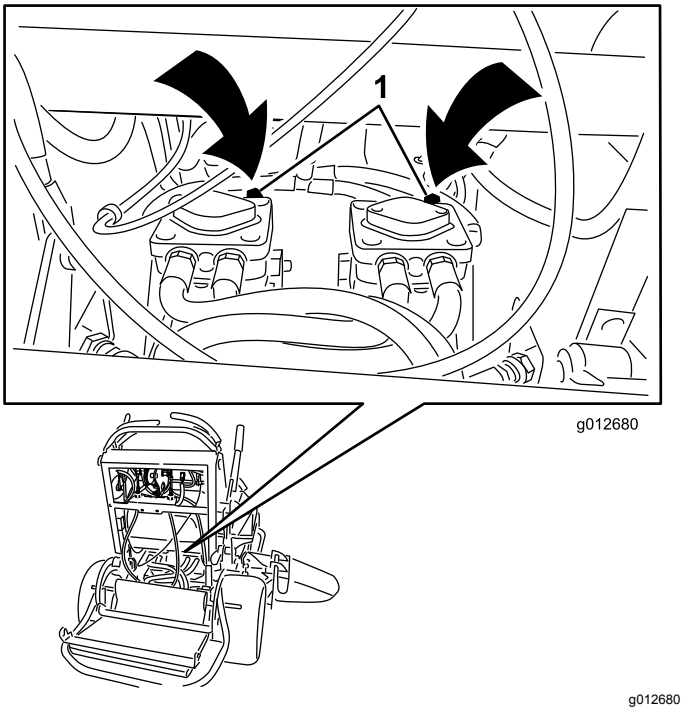

Figure 27

1. Pump-bypass valve

4. Disengage the parking brake.
5. Push the machine to the desired location.
6. Engage the parking brake.
7. Close the bypass valves but do not overtighten them.
8. Torque the valves to 12 to 15 N·m (110 to 130 in-lb).

Transporting the Machine

Use a heavy-duty trailer or truck to transport the machine. Use a full-width ramp. Ensure that the trailer or truck has all the necessary brakes, lighting, and marking as required by law. Please carefully read all the safety instructions. Knowing this information could help you or bystanders avoid injury. Refer to your local ordinances for trailer and tie-down requirements.

⚠ WARNING

Driving on the street or roadway without turn signals, lights, reflective markings, or a slow-moving-vehicle emblem is dangerous and can lead to accidents, causing personal injury.

Do not drive the machine on a public street or roadway.

Selecting a Trailer

⚠ WARNING

Loading a machine onto a trailer or truck increases the possibility of tip-over and could cause serious injury or death (Figure 28).

- **Use only a full-width ramp; do not use individual ramps for each side of the machine.**
- **Ensure that the length of ramp is at least 4 times as long as the height of the trailer or truck bed to the ground.**

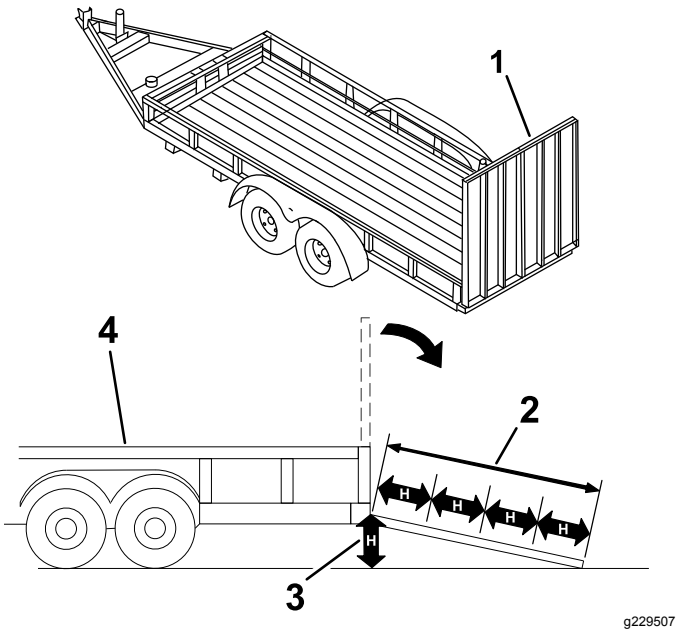

Figure 28

1. Full-width ramp in stowed position
2. Ramp is at least 4 times as long as the height of the trailer or truck bed to the ground
3. H=height of the trailer or truck bed to the ground
4. Trailer

Loading the Machine

⚠ WARNING

Loading a machine onto a trailer or truck increases the possibility of tip-over and could cause serious injury or death.

- **Use extreme caution when operating a machine on a ramp.**
- **Back the machine up the ramp and walk it forward down the ramp.**
- **Avoid sudden acceleration or deceleration while driving the machine on a ramp as this could cause a loss of control or a tip-over situation.**

1. If using a trailer, connect it to the towing vehicle and connect the safety chains.
2. If applicable, connect the trailer brakes and lights.
3. Lower the ramp (Figure 28).
4. Raise the platform.

   Important: **Always keep the platform up when loading and unloading the machine.**
5. Back the machine up the ramp (Figure 29).

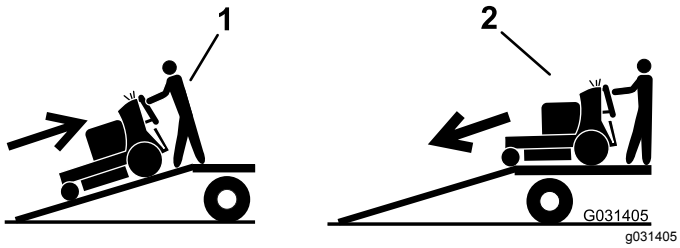

g031405

Figure 29

1. Back the machine up the ramp.
2. Walk the machine down the ramp.

6. Shut off the engine, remove the key, and engage the parking brake.
7. Tie down the machine near the front caster wheels and the rear bumper with straps, chains, cable, or ropes (Figure 30). Refer to local regulations for tie-down requirements.

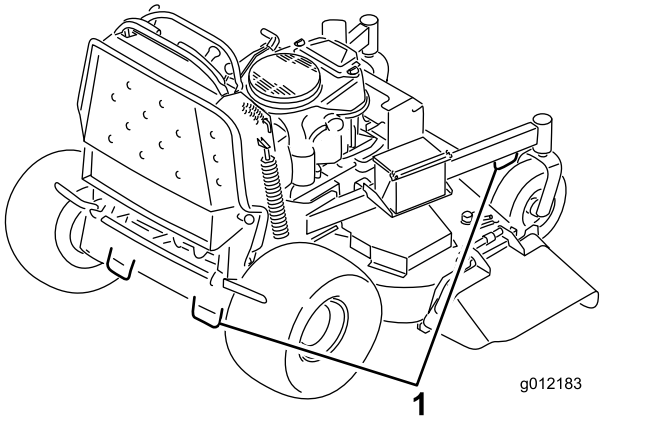

g012183

Figure 30

1. Tie-down loops

Maintenance

Note: Determine the left and right sides of the machine from the normal operating position.

Maintenance Safety

- Before adjusting, cleaning, servicing, or leaving the machine, do the following:
  - Park the machine on a level surface.
  - Disengage the drives.
  - Engage the parking brake.
  - Shut off the engine and remove the ignition key.
  - Wait for all moving parts to stop.
  - Allow machine components to cool before performing maintenance.
- Do not allow untrained personnel to service the machine.
- Keep your hands and feet away from moving parts. If possible, do not make adjustments with the engine running.
- Carefully release pressure from components with stored energy.
- Check the parking brake operation frequently. Adjust and service the brake as needed.
- Never tamper with safety devices. Check their proper operation regularly.
- Clean grass and debris from the cutting unit, drives, muffler, and engine to help prevent fires. Clean up oil or fuel spills.
- Check the grass catcher components frequently and replace them when they are worn or damaged.
- Do not rely on a hydraulic system to support the machine; support the machine with jack stands whenever you raise the machine.
- Keep all parts in good working condition and all hydraulic fittings tight. Replace all worn, damaged, or missing parts and decals. Keep all fasteners tight to ensure that the machine is in safe working condition.
- To ensure optimum performance and continued safety certification of the machine, use only genuine Toro replacement parts and accessories. Replacement parts and accessories made by other manufacturers could be dangerous, and such use could void the product warranty.

Recommended Maintenance Schedule(s)

Maintenance Service Interval	Maintenance Procedure
After the first 8 hours	• Change the engine oil. • Check the hydraulic fluid level. • Change the hydraulic filter.
After the first 100 hours	• Check the wheel-lug nuts.
Before each use or daily	• Check the safety-interlock system. • Check the engine-oil level. • Clean the air-intake screen (more often in dirty or dusty conditions). • Test the parking brake. • Check the brake clearance. • Inspect the blades. • Clean under the mower deck. • Wash the machine, especially after winter applications.
Every 25 hours	• Clean foam air-cleaner element (more often in dirty or dusty conditions).
Every 50 hours	• Grease the mower-deck idler arms (more often in dirty or dusty conditions). • Grease the lift linkage (more often in dirty or dusty conditions). • Check the spark arrester (if equipped). • Check the tire pressure. • Check the hydraulic fluid level.

Maintenance Service Interval	Maintenance Procedure
Every 100 hours	• Clean the paper air-cleaner element (more often in dirty or dusty conditions). • Change the engine oil. • Check, clean and gap the spark plug. • Check the battery. • Check the electric clutch. • Check and clean engine cooling fins and shrouds (more often in dirty or dusty conditions). • Check the mower-deck belt(s). • Check the pump-drive belt. • Check the hydraulic hoses.
Every 200 hours	• Replace the paper air-cleaner element (more often in dirty or dusty conditions).
Every 250 hours	• Change the hydraulic fluid when using Mobil® 1 oil.
Every 300 hours	• Check and adjust the valve clearance. See an Authorized Service Dealer.
Every 500 hours	• Adjust the caster-pivot bearing. • Change the hydraulic fluid when using Toro® HYPR-OIL™ 500 hydraulic fluid. • Change the hydraulic filter.
Every 800 hours	• Replace the fuel filter.
Before storage	• Paint chipped surfaces. • Perform all maintenance procedures listed above before storage. • Paint chipped surfaces. • Perform all maintenance procedures listed above before storage.
Yearly	• Grease the front caster pivots (more often in dirty or dusty conditions). • Grease the caster-wheel hubs.

Important: **Refer to your engine owner's manual for additional maintenance procedures.**

⚠ CAUTION

If you leave the key in the ignition switch, someone could accidently start the engine and seriously injure you or other bystanders.

Remove the key from the ignition and disconnect the spark-plug wires from the spark plugs before you do any maintenance. Set the wires aside so that they do not accidentally contact the spark plugs.

Pre-Maintenance Procedures

Raising the Mower for Access

You can raise the front of the mower and support it on its back for access under the machine for maintenance.

1. Park the machine on a level surface, disengage the PTO, and engage the parking brake.
2. Shut off the engine, remove the key, and wait for all moving parts to stop before leaving the operating position.
3. Raise the platform; refer to Operating the Platform (page 16).
4. Remove the battery; refer to Removing the Battery (page 35).

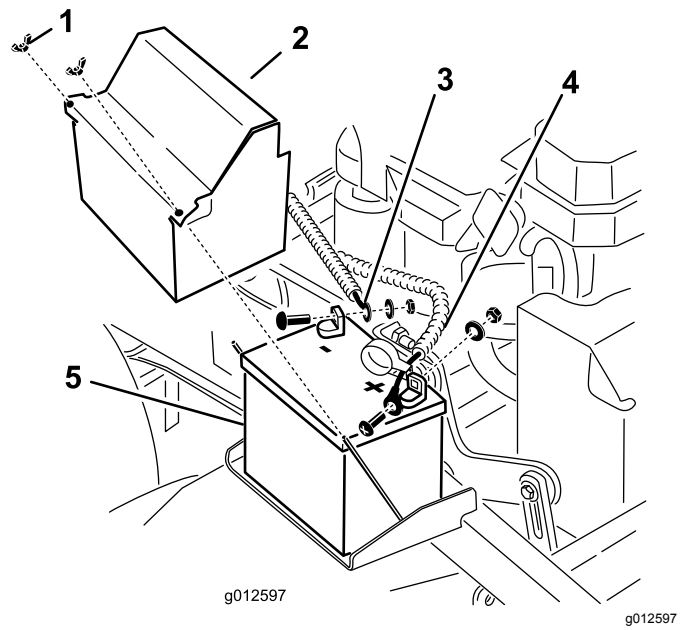

Figure 31

1. Wing nut
2. Battery cover
3. Negative (–) battery cable
4. Positive (+) battery cable
5. Battery

5. Drain the fuel from the fuel tank; refer to Draining the Fuel Tank (page 33).
6. Remove the cap of the hydraulic tank and place a piece of plastic over the opening and install the hydraulic cap.

   Note: This seals the hydraulic tank and prevents it from leaking out.

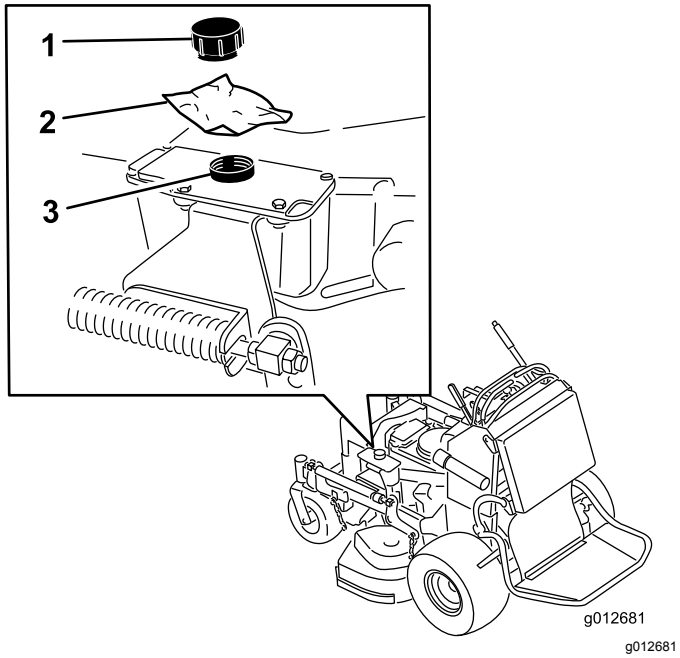

Figure 32

1. Cap
2. Piece of plastic
3. Hydraulic tank

7. With 2 people, raise the front of the mower so that it rests on the drive tires and the platform in the up position.
8. Perform any maintenance on the machine.
9. With 2 people, lower the front of the mower to the ground.
10. Remove the plastic under the hydraulic-tank cap.
11. Install the battery for the machine.

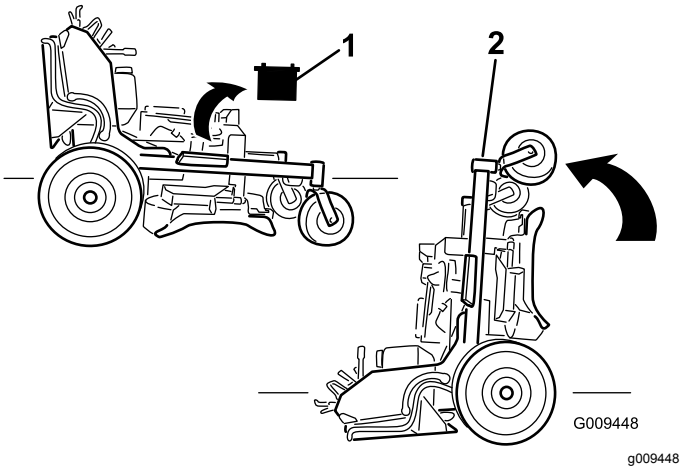

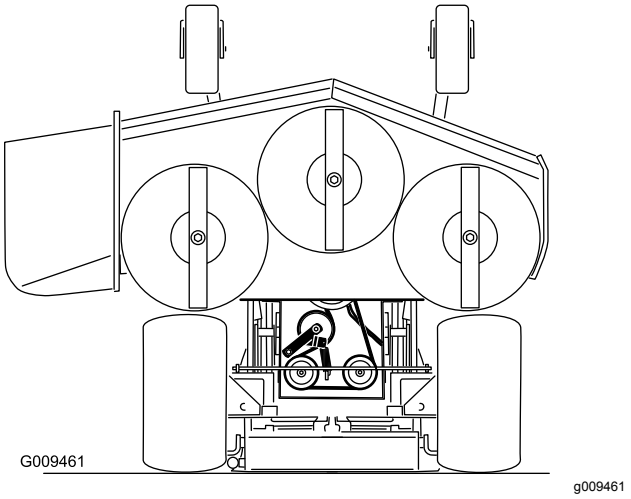

Figure 33

1. Remove the battery.
2. With 2 people, lift the front end of the mower (ensure that the platform is up).

Releasing the Cushion for Rear Access

You can release the cushion for rear access to the machine for maintenance or adjustment.

1. Lower the platform.
2. Remove the hairpin cotters on each side of the cushion.
3. Slide the large washers with plastic bushings to the inside.
4. Remove the cushion and lower it to the platform.
5. Perform any maintenance or adjustment on the machine.
6. Raise the cushion and slide it onto the pins on both sides of the machine (Figure 34).
7. Slide the large washers with plastic bushings into the cushion bracket and secure them with a hairpin-cotter pin (Figure 34).

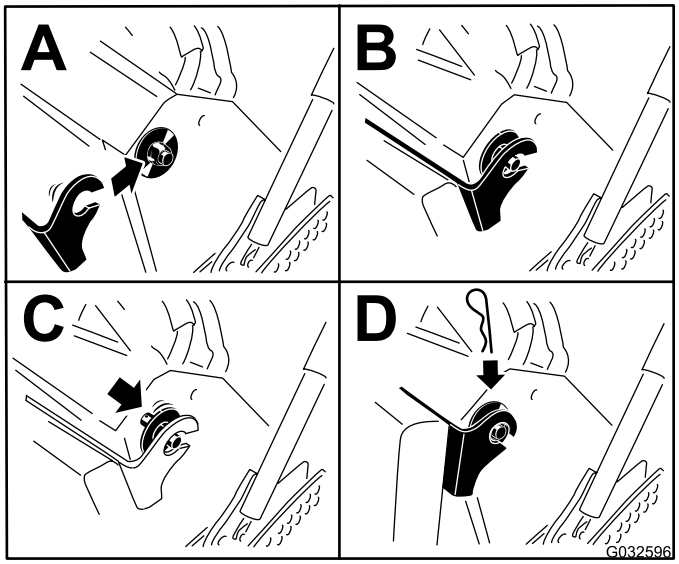

Figure 34

Lubrication

Greasing the Machine

Service Interval: Every 50 hours—Grease the mower-deck idler arms (more often in dirty or dusty conditions).

Every 50 hours—Grease the lift linkage (more often in dirty or dusty conditions).

Grease type: Lithium or molybdenum grease

1. Park the machine on a level surface, disengage the PTO, and engage the parking brake.
2. Shut off the engine, remove the key, and wait for all moving parts to stop before leaving the operating position.
3. Clean the grease fittings with a rag.

   Note: Scrape any paint off the front of the fitting(s).
4. Connect a grease gun to the fitting.
5. Pump grease into the fittings until grease begins to ooze out of the bearings.
6. Wipe up any excess grease.

Use the following graphics for locating the grease points.

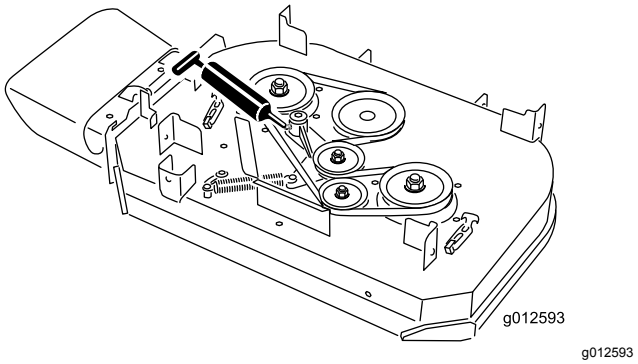

Figure 35

Models with a 91 cm or 36-Inch Mower Deck

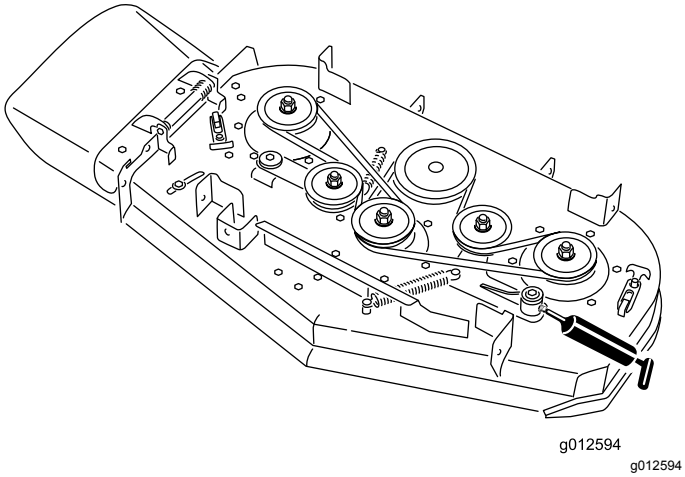

g012594

Figure 36

Models with a 102 cm or 40-Inch Mower Deck

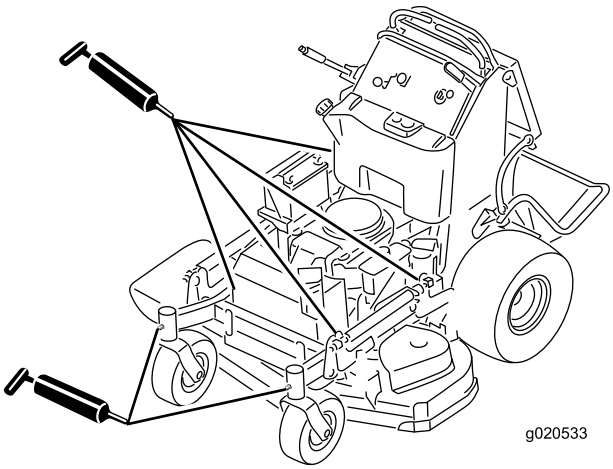

g020533

Figure 37

All Models

Greasing the Front Caster Pivots

Service Interval: Yearly

Grease type: Lithium or molybdenum grease

1. Remove the dust cap and adjust the caster pivots; refer to Adjusting the Caster-Pivot Bearing (page 39).

   Note: Keep the dust cap off until you have finished greasing the caster pivots.
2. Remove the hex plug.
3. Thread a grease fitting into the hole.
4. Pump grease into the fitting until it oozes out around the top bearing.
5. Remove the grease fitting from the hole.
6. Install the hex plug and dust cap.

Greasing the Caster-Wheel Hubs

Service Interval: Yearly

Grease type: Lithium or molybdenum grease

1. Park the machine on a level surface, disengage the PTO, and engage the parking brake.
2. Shut off the engine, remove the key, and wait for all moving parts to stop before leaving the operating position.
3. Remove the caster wheel from the caster forks.
4. Remove the seal guards from the wheel hub (Figure 38).

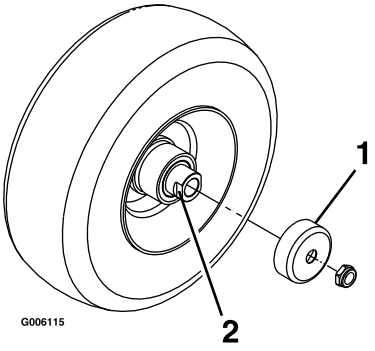

g006115

Figure 38

1. Seal guard
2. Spacer nut with wrench flats

5. Remove 1 spacer nut from the axle assembly in the caster wheel.

   Note: Thread-locking adhesive has been applied to lock the spacer nuts to the axle. Remove the axle (with the other spacer nut still assembled to it) from the wheel assembly.
6. Pry out the seals, inspect bearings for wear or damage, and replace them if necessary.
7. Pack the bearings with a general-purpose grease.
8. Insert 1 bearing and 1 new seal into the wheel.

   Note: You must replace the seals.
9. If both spacer nuts in the axle assembly have been removed (or broken loose), apply a thread-locking adhesive to 1 spacer nut, threading it onto the axle with the wrench flats facing outward.

   Note: Do not thread the spacer nut all of the way onto the end of the axle. Leave approximately 3 mm (1/8 inch) from the outer surface of the spacer nut to the end of the axle inside the nut.

10. Insert the assembled nut and axle into the wheel on the side of the wheel with the new seal and bearing.
11. With the open end of the wheel facing up, fill the area inside the wheel around the axle full of general-purpose grease.
12. Insert the second bearing and the new seal into the wheel.
13. Apply a thread-locking adhesive to the second spacer nut, threading it onto the axle with the wrench flats facing outward.
14. Torque the nut to 8 to 9 N·m (71 to 80 in-lb), loosen it, then torque it to 2 to 3 N·m (20 to 25 in-lb).

    Note: Make sure that the axle does not extend beyond either nut.
15. Install the seal guards over the wheel hub and insert the wheel into the caster fork.
16. Install the caster bolt and tighten the nut fully.

Important: **To prevent seal and bearing damage, check the bearing adjustment often by spinning the caster wheel. The wheel should not spin freely (more than 1 or 2 revolutions) or have any side play. If the wheel spins freely, adjust the torque on the spacer nut until there is a slight amount of drag, and apply thread-locking adhesive.**

Engine Maintenance

Engine Safety

- Shut off the engine before checking the oil or adding oil to the crankcase.
- Keep your hands, feet, face, clothing, and other body parts away from the muffler and other hot surfaces.

Servicing the Air Cleaner

Service Interval: Every 300 hours

Inspect the foam and paper elements and replace them if they are damaged or excessively dirty.

Important: **Do not oil the foam or paper element.**

Removing the Foam and Paper Elements

1. Park the machine on a level surface, disengage the PTO, and engage the parking brake.
2. Shut off the engine, remove the key, and wait for all moving parts to stop before leaving the operating position.
3. Clean around the air cleaner to prevent dirt from getting into the engine and causing damage (Figure 39).
4. Loosen the cover knobs and remove the air-cleaner cover (Figure 39).
5. Loosen the hose clamp and remove the air-cleaner assembly (Figure 39).
6. Carefully pull the foam element off the paper element (Figure 39).

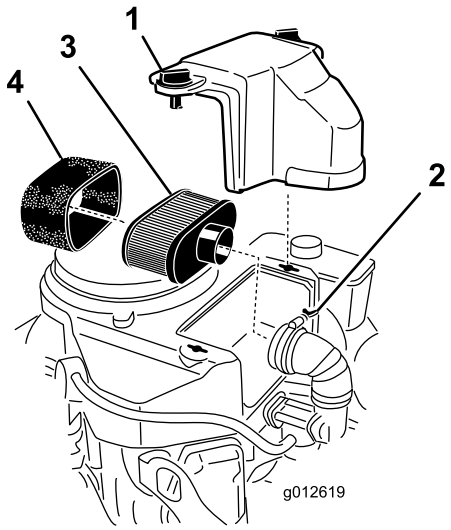

g012619

Figure 39

1. Cover
2. Hose clamp
3. Paper element
4. Foam element

Cleaning the Foam Air-Cleaner Element

Service Interval: Every 25 hours

1. Wash the foam element in liquid soap and warm water. When the element is clean, rinse it thoroughly.
2. Dry the element by squeezing it in a clean cloth.

   Important: **Replace the foam element if it is torn or worn.**

Servicing the Paper Air-Cleaner Element

Service Interval: Every 100 hours—Clean the paper air-cleaner element (more often in dirty or dusty conditions).

Every 200 hours—Replace the paper air-cleaner element (more often in dirty or dusty conditions).

1. Clean the paper element by tapping it gently to remove dust.

   Note: If it is very dirty, replace the paper element with a new one.
2. Inspect the element for tears, an oily film, or damage to the rubber seal.
3. Replace the paper element if it is damaged.

   Important: **Do not clean the paper filter.**

Installing the Foam and Paper Elements

Important: **To prevent engine damage, always operate the engine with the complete foam and paper air-cleaner assembly installed.**

1. Carefully slide the foam element onto the paper air-cleaner element (Figure 39).
2. Place the air-cleaner assembly onto the base of the air cleaner or hose and secure it (Figure 39).
3. Place the air-cleaner cover into position and tighten the cover knob (Figure 39).

Servicing the Engine Oil

Engine-Oil Specifications

Oil Type: Detergent oil (API service SF, SG, SH, SJ or SL)

Engine Oil Capacity: 1.7 L (57 fl oz) with the filter; 1.5 L (51 fl oz) without the filter

Viscosity: Refer to the table below:

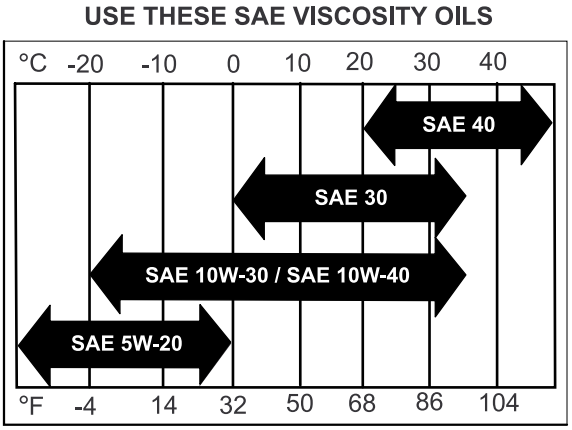

g004216

Figure 40

Checking the Engine-Oil Level

Service Interval: Before each use or daily

Note: Check the oil when the engine is cold.

⚠ WARNING

Contact with hot surfaces may cause personal injury.

Keep your hands, feet, face, clothing and other body parts away the muffler and other hot surfaces.

Important: **Do not overfill the crankcase with oil because damage to the engine may result. Do not**

run engine with oil below the low mark because the engine may be damaged.

1. Park the machine on a level surface, disengage the PTO, and engage the parking brake.
2. Shut off the engine, remove the key, and wait for all moving parts to stop before leaving the operating position.
3. Check the engine-oil level as shown in (Figure 41).

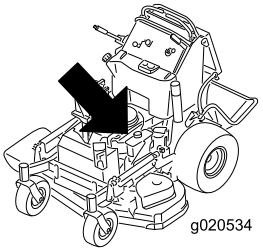

g020534

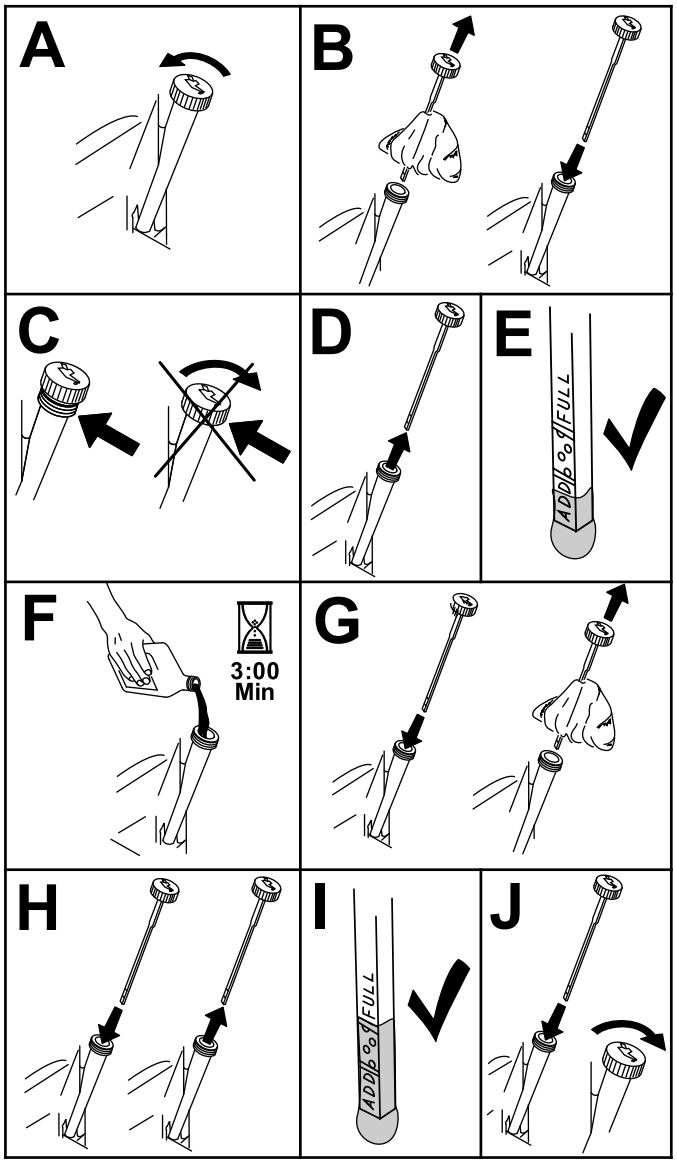

g194611

Figure 41

Changing the Engine Oil

Service Interval: After the first 8 hours

Every 100 hours

Note: Dispose of the used oil at a recycling center.

1. Park the machine so that the drain side is slightly lower than the opposite side to assure the oil drains completely.
2. Disengage the PTO, move the motion-control levers to the NEUTRAL-LOCK position, and engage the parking brake.
3. Shut off the engine, remove the key, and wait for all moving parts to stop before leaving the operating position.
4. Change the engine oil as shown in Figure 42.

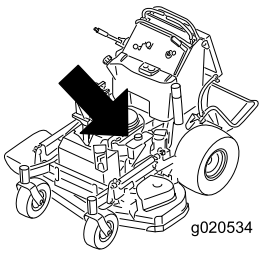

g020534

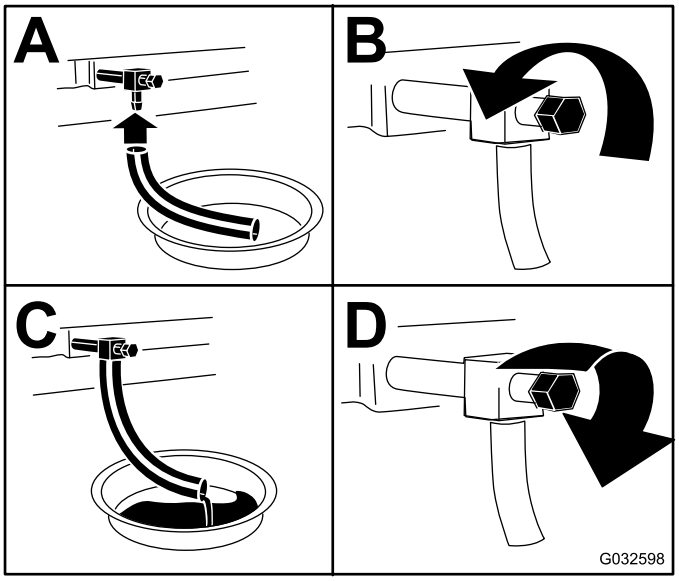

g032598

Figure 42

5. Slowly pour approximately 80% of the specified oil into the filler tube and slowly add the additional oil to bring it to the **Full** mark (Figure 43).

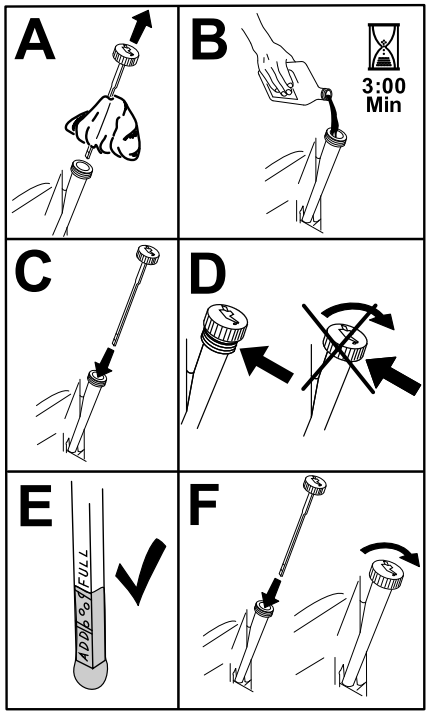

g194610

Figure 43

6. Start the engine and drive to a flat area.
7. Check the oil level again.

Servicing the Spark Plug

Service Interval: Every 100 hours

Ensure that the air gap between the center and side electrodes is correct before installing the spark plug.

Use a spark plug wrench for removing and installing the spark plug(s) and a gapping tool/feeler gauge to check and adjust the air gap. Install a new spark plug(s) if necessary.

Type: NGK® BPR4ES or equivalent

Air gap: 0.75 mm (0.03 inch)

Removing the Spark Plug

1. Park the machine on a level surface, disengage the PTO, and engage the parking brake.
2. Shut off the engine, remove the key, and wait for all moving parts to stop before leaving the operating position.
3. Remove the spark plug as shown in Figure 44.

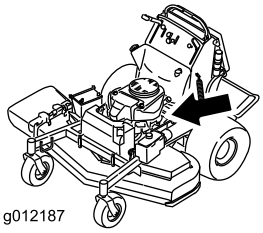

g012187

g012187

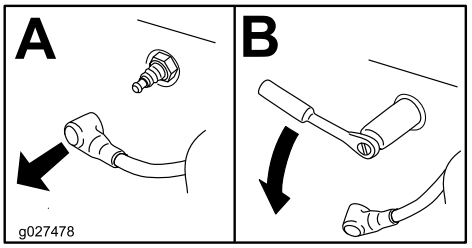

g027478

g027478

Figure 44

Checking the Spark Plug

Important: **Do not clean the spark plug(s). Always replace the spark plug(s) when it has a black coating, worn electrodes, an oily film, or cracks.**

If you see light brown or gray on the insulator, the engine is operating properly. A black coating on the insulator usually means the air cleaner is dirty.

Set the gap to 0.75 mm (0.03 inch).

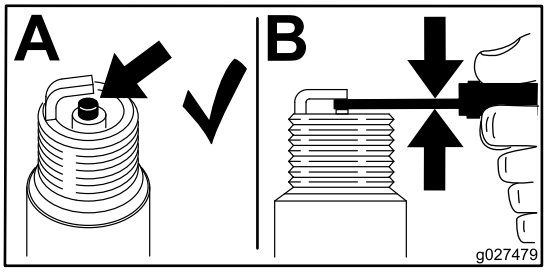

g027479

g027479

Figure 45

Installing the Spark Plug

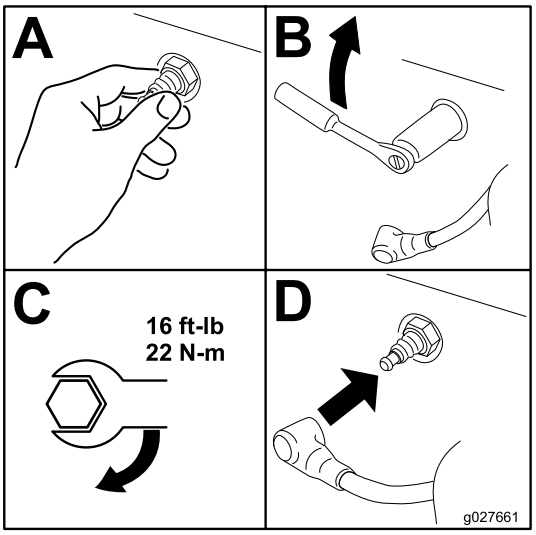

g027661

Figure 46

Checking the Spark Arrester

For Machines with a Spark Arrester

Service Interval: Every 50 hours

⚠ WARNING

Hot exhaust-system components may ignite fuel vapors even after you shut off the engine. Hot particles exhausted during engine operation may ignite flammable materials, resulting in personal injury or property damage.

Do not refuel or run the engine unless the spark arrester is installed.

1. Park the machine on a level surface, disengage the PTO, and engage the parking brake.
2. Shut off the engine, remove the key, and wait for all moving parts to stop before leaving the operating position.
3. Wait for the muffler to cool.
4. If you see any breaks in the screen or welds, replace the arrester.
5. If the screen is plugged, remove the arrester, shake loose particles out of the arrester, and clean the screen with a wire brush (soak the screen in solvent if necessary).
6. Install the arrester on the exhaust outlet.

Fuel System Maintenance

Draining the Fuel Tank

Note: Use a syphon pump to drain fuel from the tank. You can purchase a syphon pump at a hardware store.

⚠ DANGER

In certain conditions, fuel is extremely flammable and highly explosive. A fire or explosion from fuel can burn you, others, and can damage property.

- **Perform any fuel-related maintenance when the engine is cold. Do this outdoors in an open area. Wipe up any fuel that spills.**
- **Never smoke when draining fuel, and stay away from an open flame or where a spark may ignite the fuel fumes.**

1. Park the machine on a level surface, disengage the PTO, and engage the parking brake.
2. Shut off the engine, remove the key, and wait for all moving parts to stop before leaving the operating position.
3. Clean around the fuel cap to prevent debris from getting into the fuel tank (Figure 47).
4. Remove the fuel cap.
5. Insert a syphon pump into the fuel tank.
6. Using the syphon pump, drain the fuel into a clean fuel can (Figure 47).
7. Wipe up any spilled fuel.

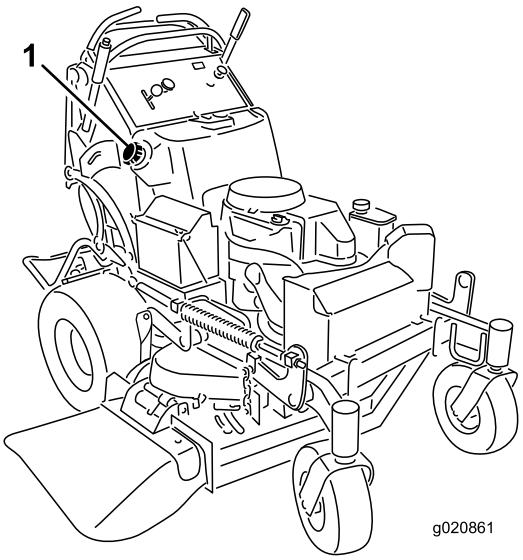

g020861

Figure 47

1. Fuel cap

Replacing the Fuel Filter

Service Interval: Every 800 hours/Yearly (whichever comes first)

Do not install a dirty filter if it is removed from the fuel line.

Note: Wipe up any spilled fuel.

1. Park the machine on a level surface, disengage the PTO, and engage the parking brake.
2. Shut off the engine, remove the key, and wait for all moving parts to stop before leaving the operating position.
3. Close the fuel-shutoff valve; refer to Using the Fuel-Shutoff Valve (page 20).
4. Replace the fuel filter as shown in Figure 48.

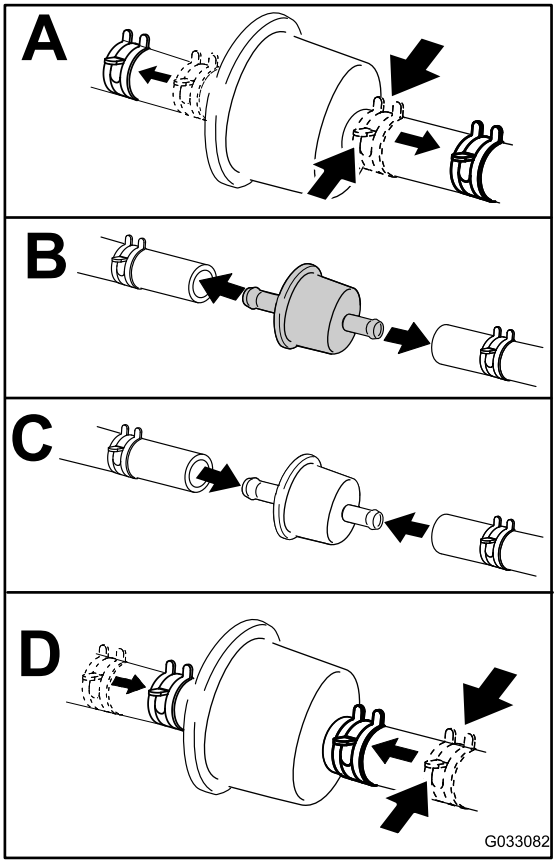

g033082

Figure 48

Electrical System Maintenance

Electrical System Safety

- Disconnect the battery or remove the spark-plug wire before making any repairs. Disconnect the negative terminal first and the positive terminal last. Connect the positive terminal first and negative last.
- Charge the battery in an open, well-ventilated area, away from sparks and flames. Unplug the charger before connecting or disconnecting the battery. Wear protective clothing and use insulated tools.

Servicing the Battery

Service Interval: Every 100 hours

Always keep the battery clean and fully charged. Use a paper towel to clean the battery case. If the battery terminals are corroded, clean them with a solution of four parts water and 1 part baking soda. Apply a light coating of grease to the battery terminals to prevent corrosion.

Voltage: 12 V

Removing the Battery

1. Park the machine on a level surface, disengage the PTO, and engage the parking brake.
2. Shut off the engine, remove the key, and wait for all moving parts to stop before leaving the operating position.
3. Remove the battery as shown in Figure 49.

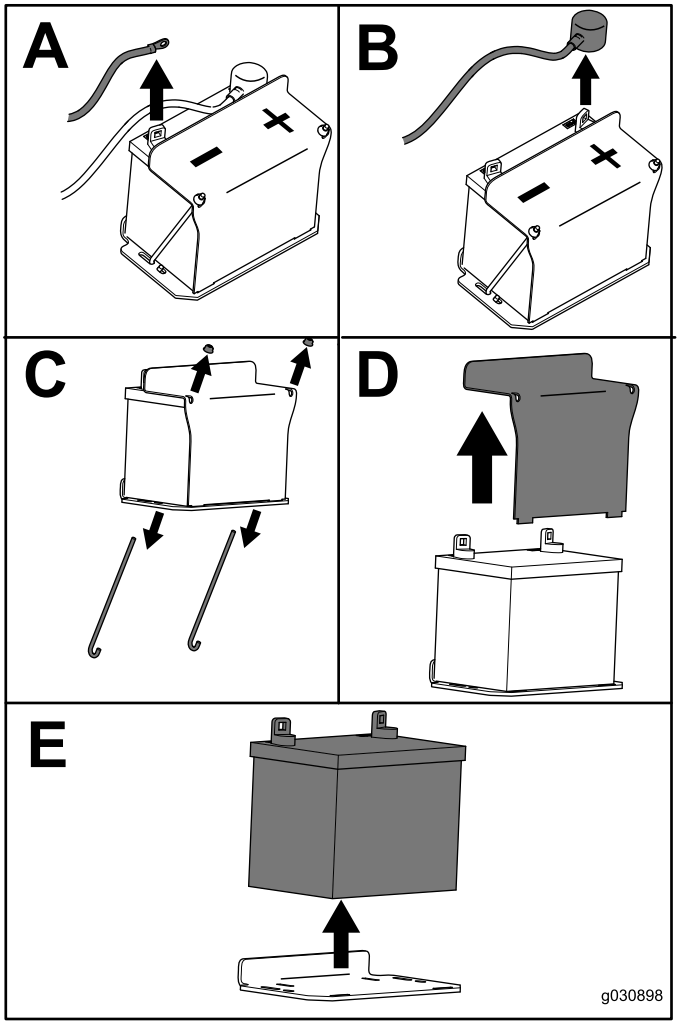

g030988

Figure 49

Charging the Battery

⚠ WARNING

Charging the battery produces gasses that can explode.

Never smoke near the battery and keep sparks and flames away from battery.

Important: **Always keep the battery fully charged (1.265 specific gravity) to prevent battery damage when the temperature is below 0°C (32°F).**

1. Remove the battery from the chassis; refer to Removing the Battery (page 35).
2. Check the electrolyte level.
3. Ensure that the filler caps are installed on the battery.
4. Charge the battery for 1 hour at 25 to 30 A or 6 hours at 4 to 6 A.
5. When the battery is fully charged, unplug the charger from the electrical outlet, and disconnect the charger leads from the battery posts (Figure 50).
6. Install the battery onto the machine and connect the battery cables; refer to Installing the Battery (page 36).

   Note: Do not run the machine with the battery disconnected; electrical damage may occur.

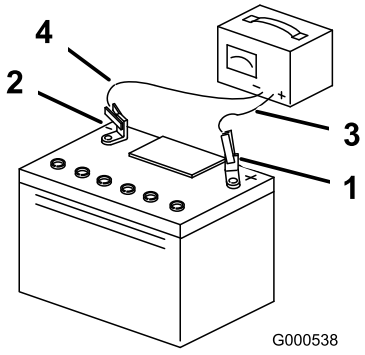

g000538

Figure 50

1. Positive battery post
2. Negative battery post
3. Red (+) charger lead
4. Black (-) charger lead

Installing the Battery

Install the battery as shown in Figure 51.

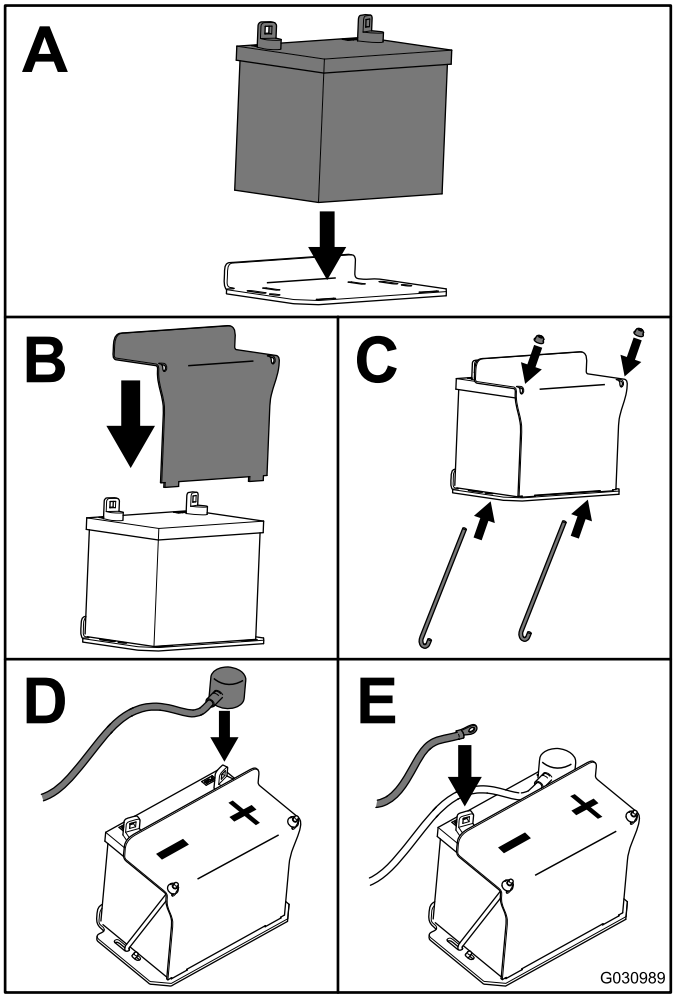

g030989

Figure 51

Servicing the Fuses

The electrical system is protected by fuses. It requires no maintenance. If a fuse blows, check the component or circuit for a malfunction or short.

1. Park the machine on a level surface, disengage the PTO, and engage the parking brake.
2. Shut off the engine, remove the key, and wait for all moving parts to stop before leaving the operating position.
3. Release the operator cushion from the rear of the machine.
4. Pull out the fuse and replace it (Figure 52).
5. Install the operator cushion.

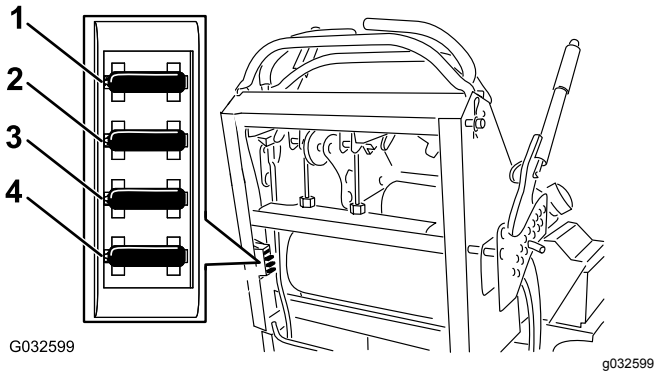

Figure 52

1. Optional accessory fuse (15 A)
2. Power-takeoff (PTO) fuse (10 A)
3. Charge fuse (25 A)
4. Main fuse (30 A)

Drive System Maintenance

Adjusting the Tracking

If you push both motion-control levers forward the same distance and the machine pulls to 1 side, adjust the tracking as follows.

1. Park the machine on a level surface, disengage the PTO, and engage the parking brake.
2. Shut off the engine, remove the key, and wait for all moving parts to stop before leaving the operating position.
3. Release the cushion from the rear of the machine.
4. Rotate the right cable adjustment to position the right motion-control lever in the center of the control-panel neutral-lock slot (Figure 54).

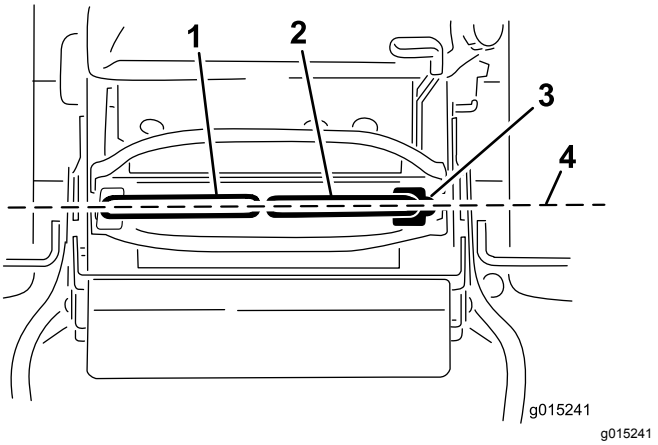

g015241

Figure 53

1. Left motion-control lever
2. Right motion-control lever
3. NEUTRAL-LOCK position
4. Align the control levers front to back.

5. Rotate the left cable adjustment to match the left wheel speed to the previously set right wheel speed.
6. Adjust in quarter-turn increments until the machine tracks straight.

   Note: Adjust only the left cable to match the left wheel speed to the right wheel speed. Do not adjust the right wheel speed as this positions the right motion-control lever out of the center for the control-panel neutral-lock slot.

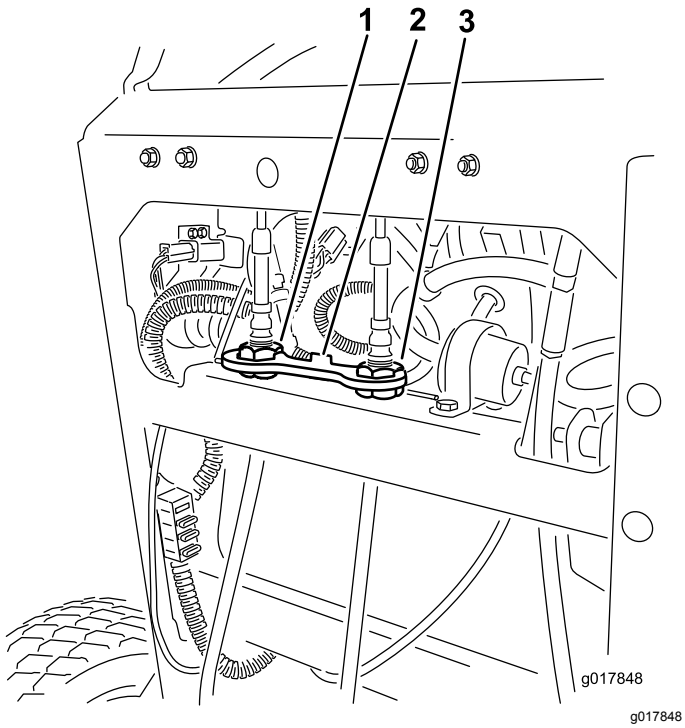

Figure 54

1. Left cable adjustment
2. Cable lock
3. Right cable adjustment

7. Check for proper tracking.

   Note: If the machine does not start after adjusting the tracking, make sure that the proximity switch target aligns with the bolt attached to the motion-control lever; refer to Adjusting the Proximity Switch (page 38).

8. Repeat the cable adjustment until the tracking is correct.
9. Check that the machine does not creep from neutral with the park brakes disengaged.

Important: **Do not rotate the linkage too far, as this may cause the machine to creep in neutral.**

Adjusting the Proximity Switch

Use this procedure if the machine does not start after adjusting the tracking.

1. Ensure that the bolt attached to the motion-control lever aligns with the proximity-switch target (Figure 55).
2. If needed, loosen the bolts and adjust the proximity switch until the target aligns with the bolt attached to the motion-control lever (Figure 55).
3. Check the distance of the bolt to the proximity switch; it needs to be between 0.51 to 1.02 mm (0.02 to 0.04 inches) as shown in Figure 55.
4. If adjustment is needed, loosen the jam nut and adjust the bolt to the correct distance.
5. Tighten the jam nut after adjusting the bolt (Figure 55).
6. Test the safety-interlock system before operating the machine.

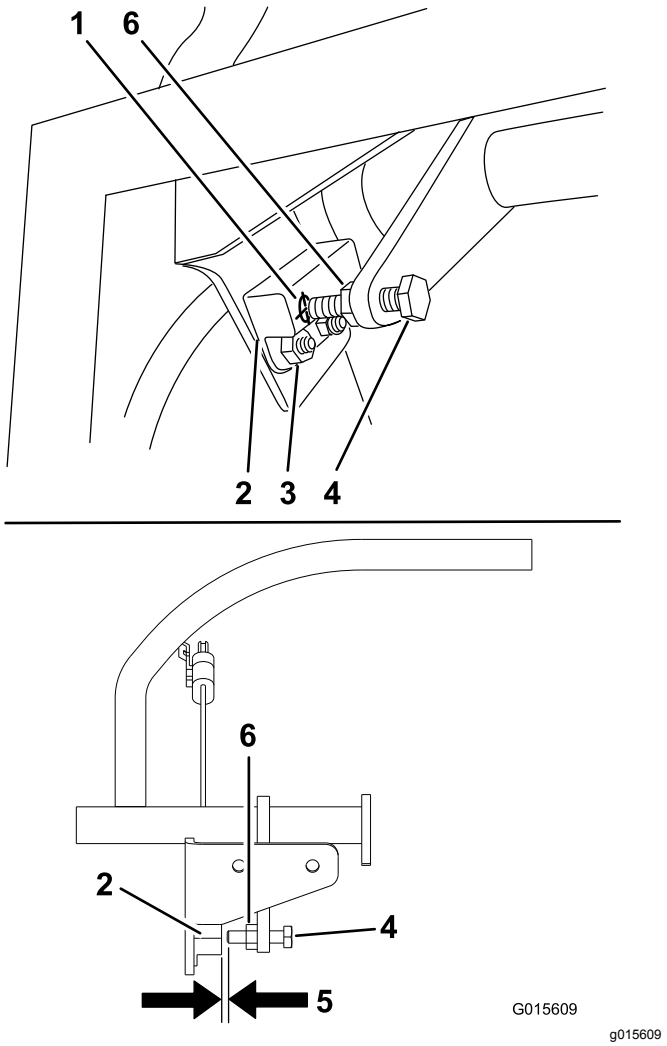

Figure 55

1. Proximity-switch target
2. Proximity switch
3. Bolts and nuts
4. Bolt attached to the motion-control lever
5. 0.51 to 1.02 mm (0.02 to 0.04 inches)
6. Jam nut

Checking the Tire Pressure

Service Interval: Every 50 hours/Monthly (whichever comes first)

Maintain the air pressure in the rear tires at 83 to 97 kPa (12 to 14 psi).

Important: **Uneven tire pressure can cause an uneven cut.**

Note: The front tires are semi-pneumatic tires and do not require air-pressure maintenance.

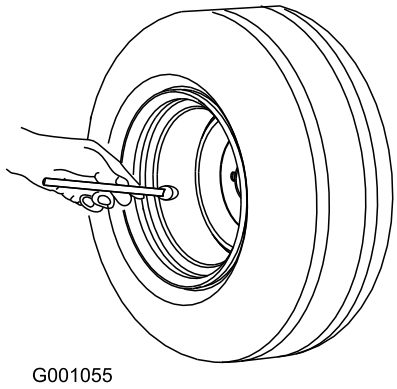

Figure 56

Adjusting the Caster-Pivot Bearing

Service Interval: Every 500 hours/Yearly (whichever comes first)

1. Park the machine on a level surface, disengage the PTO, and engage the parking brake.
2. Shut off the engine, remove the key, and wait for all moving parts to stop before leaving the operating position.
3. Remove the dust cap from the caster and tighten the locknut (Figure 57).
4. Tighten the locknut until the spring washers are flat, and then back off 1/4 turn to properly set the preload on the bearings (Figure 57).

   Important: **Make sure that the spring washers are installed correctly as shown in Figure 57.**
5. Install the dust cap (Figure 57).

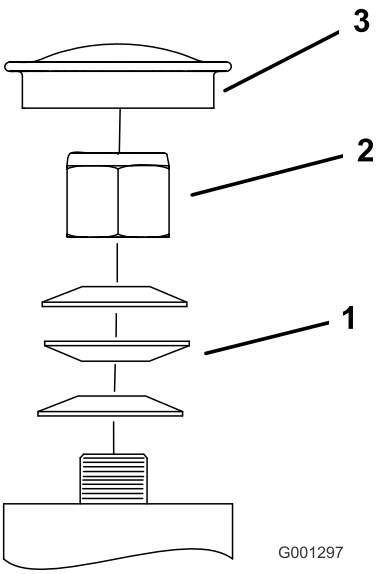

Figure 57

1. Spring washers
2. Locknut
3. Dust cap

Adjusting the Electric Clutch

Service Interval: Every 100 hours—Check the electric clutch.

The clutch is adjustable to ensure proper engagement and proper braking.

1. Park the machine on a level surface, disengage the PTO, and engage the parking brake.
2. Shut off the engine, remove the key, and wait for all moving parts to stop before leaving the operating position.
3. Insert a 0.4 to 0.5 mm (0.01 to 0.02 inch) feeler gauge through an inspection slot in the side of the assembly.

   Note: Ensure that it is between the armature and the rotor friction surfaces.

   Note: The gap needs to be at least 0.4 mm (0.02 inches) and not more than 0.5 mm (0.02 inches).
4. If adjustment is needed, use a 0.4 mm (0.02 inches) feeler gauge to set each of the 3 adjustment-slot positions.
5. Tighten the locknuts until there is slight binding on the feeler gauge but it can be moved easily within the air gap (Figure 58).
6. Repeat this for the remaining slots.
7. Check each slot again and make slight adjustments until the feeler gauge is between

the rotor and armature with very slight contact between them.

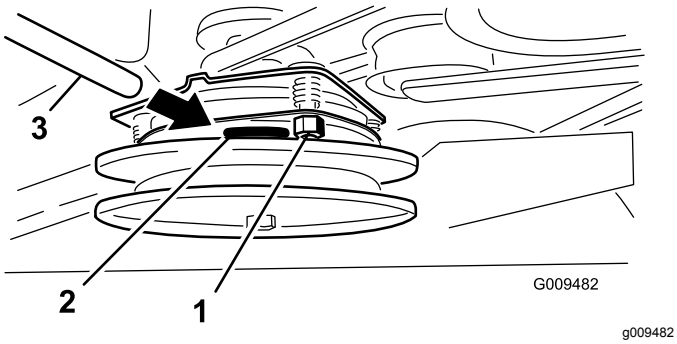

Figure 58

1. Adjusting nut
2. Slot
3. Feeler gauge

Checking the Wheel-Lug Nuts

Service Interval: After the first 100 hours—Check the wheel-lug nuts.

Check and torque the wheel-lug nuts to 115 to 142 N·m (85 to 105 ft-lb).

Cooling System Maintenance

Cleaning the Air-Intake Screen

Service Interval: Before each use or daily

Before each use, remove any buildup of grass, dirt, or other debris from the cylinder and cylinder-head cooling fins, air-intake screen on the flywheel end, and the carburetor-governor levers and linkage. This helps ensure adequate cooling of the engine and the correct engine speed, and it reduces the possibility of overheating or mechanical damage to the engine.

Cleaning the Cooling System

Service Interval: Every 100 hours—Check and clean engine cooling fins and shrouds (more often in dirty or dusty conditions).

1. Park the machine on a level surface, disengage the PTO, and engage the parking brake.
2. Shut off the engine, remove the key, and wait for all moving parts to stop before leaving the operating position.
3. Remove the air-intake screen and the fan housing (Figure 59).
4. Clean the debris and grass from the engine parts.
5. Install the air-intake screen and fan housing (Figure 59).

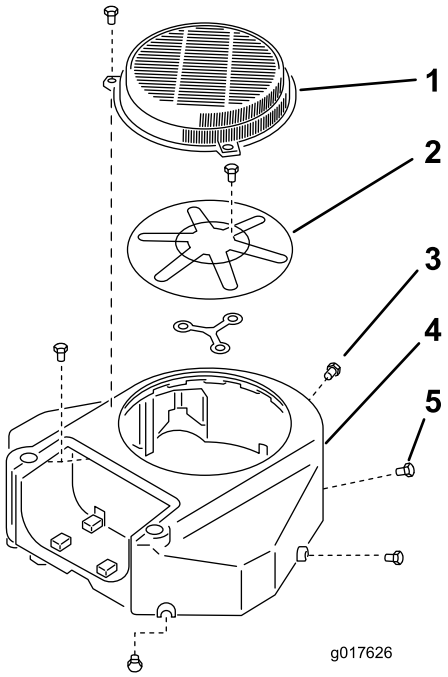

g017626

Figure 59

1. Guard
2. Engine air-intake screen
3. Bolt
4. Fan housing
5. Screw

Brake Maintenance

Testing the Parking Brake

Service Interval: Before each use or daily

Before each use, test the parking brake on both a level surface and slope.

Always engage the parking brake when you stop the machine or leave it unattended. If the parking brake does not hold securely, adjust it.

1. Disengage the PTO and engage the parking brake
2. Shut off the engine, remove the key, and wait for all moving parts to stop before leaving the operating position.
3. Disengage the parking brake.
4. Engage the brake lever and ensure that the machine does not move.
5. Adjust the brake if needed.

Checking the Brake Clearance

Service Interval: Before each use or daily

Important: **Ensure that the machine is on a level surface when checking and adjusting the brake.**

1. Park the machine on a level surface, disengage the PTO, and engage the parking brake.
2. Shut off the engine, remove the key, and wait for all moving parts to stop before leaving the operating position.
3. Check the tire pressure; refer to Checking the Tire Pressure (page 39).
4. Disengage the parking brake; refer to Operating the Parking Brake (page 13).
5. With the brake disengaged, measure the distance between the brake bar and the tire on each side.
6. Using the side with the smallest clearance, ensure that the distance is between 3 and 6 mm (1/8 and 1/4 inches) as shown in Figure 60); refer to Adjusting the Brakes (page 42) if the distance is incorrect.

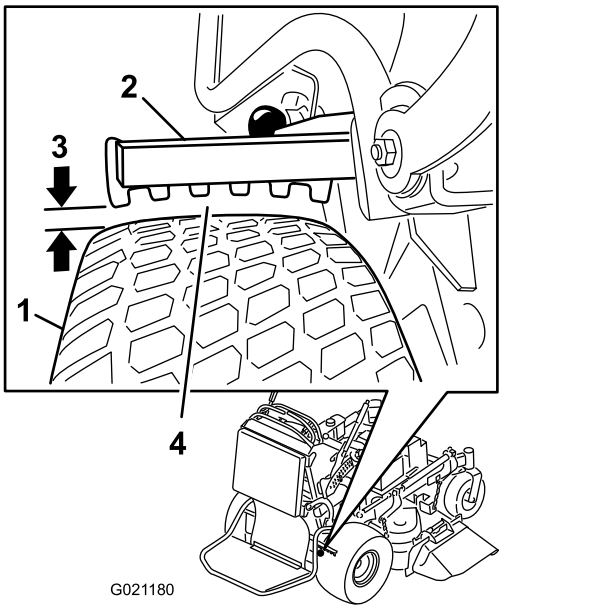

Figure 60

1. Tire
2. Brake bar
3. Clearance between 3 and 6 mm (1/8 and 1/4 inches)
4. Measure the smallest clearance between the bar and tire.

Adjusting the Brakes

1. Park the machine on a level surface, disengage the PTO, and engage the parking brake.
2. Shut off the engine, remove the key, and wait for all moving parts to stop before leaving the operating position.
3. Disengage the parking brake.
4. To adjust the brake, remove the clevis pin and hairpin cotter from the lower-brake lever and yoke (Figure 61).
5. Adjust the yoke (Figure 60).

   Note: The distance between the brake bar and the tire needs be between 3 and 6 mm (1/8 and 1/4 inches).

   Note: To tighten the brake, rotate the yoke up. To loosen the brake, rotate the yoke down.
6. Check the brake operation again; refer to Testing the Parking Brake (page 41).
7. Secure the yoke to the lower-brake lever with the clevis pin and hairpin cotter (Figure 61).

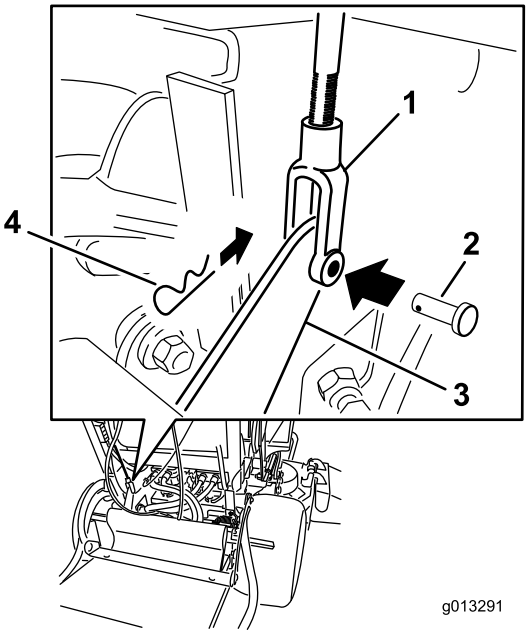

Figure 61

1. Yoke
2. Clevis pin
3. Lower-brake lever
4. Hairpin cotter

Belt Maintenance

Checking the Belts

Service Interval: Every 100 hours—Check the mower-deck belt(s).

Check belts for cracks, frayed edges, burn marks, wear, signs of overheating, or any other damage.

The signs of a worn mower belt are squealing while the belt is rotating, blades slipping while you are cutting grass, frayed belt edges, burn marks, and cracks. Replace the mower belt if you detect any of these signs.

Replacing the Mower-Deck Belt

Important: **The fasteners on the covers of this machine are designed to remain on the cover after removal. Loosen all of the fasteners on each cover a few turns so that the cover is loose but still attached, then go back and loosen them until the cover comes free. This prevents you from accidentally stripping the bolts free of the retainers.**

Machines with a 36-inch Deck

1. Park the machine on a level surface, disengage the PTO, and engage the parking brake.
2. Shut off the engine, remove the key, and wait for all moving parts to stop before leaving the operating position.
3. Loosen the bolts and remove the right belt cover with the bolt attached to it.
4. Remove the spring from the anchor post on the idler-pulley arm (Figure 62).
5. Remove the worn mower belt (Figure 62).
6. Install the new mower belt around the clutch pulley, the deck pulleys, and the idler pulley (Figure 62).
7. Install the spring onto the anchor post on the idler-pulley arm (Figure 62).
8. Install the belt cover onto the mower deck and secure the bolt.

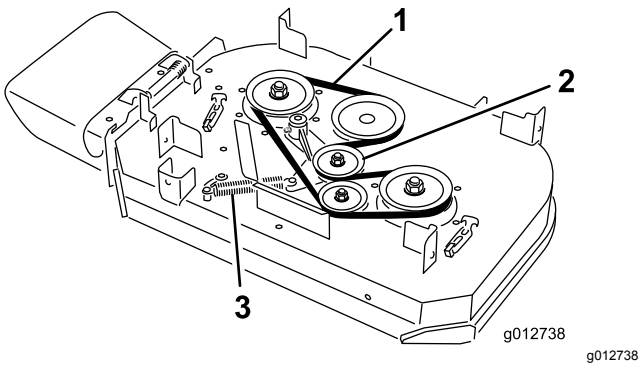

Figure 62

1. Belt
2. Spring-loaded idler pulley
3. Spring

Machines with a 40-inch Deck

1. Park the machine on a level surface, disengage the PTO, and engage the parking brake.
2. Shut off the engine, remove the key, and wait for all moving parts to stop before leaving the operating position.
3. Loosen the bolts and remove the belt covers with the bolts attached to them.
4. Remove the spring from the anchor post on the idler-pulley arm (Figure 62).

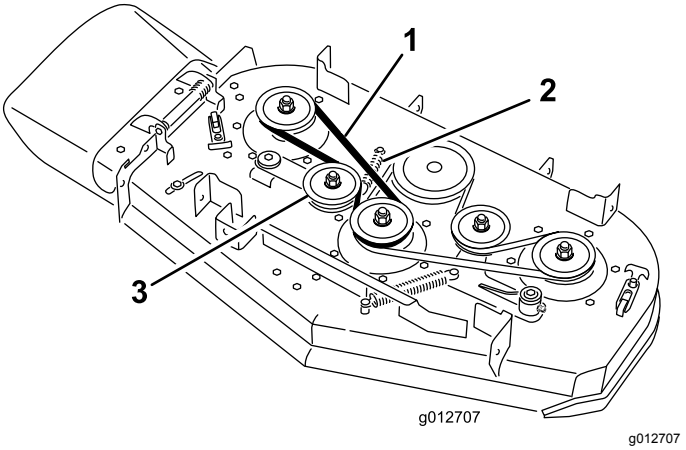

Figure 63

1. Belt
2. Spring
3. Spring-loaded idler pulley

5. Remove the right mower-deck belt (Figure 62).
6. If you are replacing the left mower-deck belt, continue as follows, otherwise proceed to step 7.
   A. Remove the spring from the anchor post on the idler-pulley arm (Figure 62).
   B. Remove the worn mower belt (Figure 62).
   C. Install a new mower belt around the deck pulleys, the clutch pulley, and the idler pulley (Figure 62).

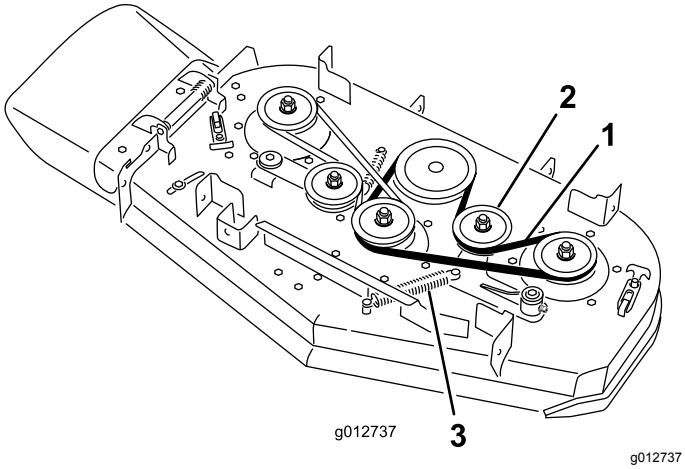

Figure 64

1. Belt
2. Spring-loaded idler pulley
3. Spring

7. Install the previously removed or a new mower belt around the deck pulleys and idler pulley (Figure 62).
8. Install the spring onto the anchor post on the idler-pulley arm (Figure 62).
9. Install the belt covers onto the mower deck and secure the bolts.

Replacing the Pump-Drive Belt

Service Interval: Every 100 hours—Check the pump-drive belt.

1. Park the machine on a level surface, disengage the PTO, and engage the parking brake.
2. Shut off the engine, remove the key, and wait for all moving parts to stop before leaving the operating position.
3. Remove the mower-deck belt; refer to Replacing the Mower-Deck Belt (page 43).
4. Tilt the machine; refer to Raising the Mower for Access (page 25).
5. Remove the shoulder bolt, the nut, and the washer from the engine deck and connected spring (Figure 65).

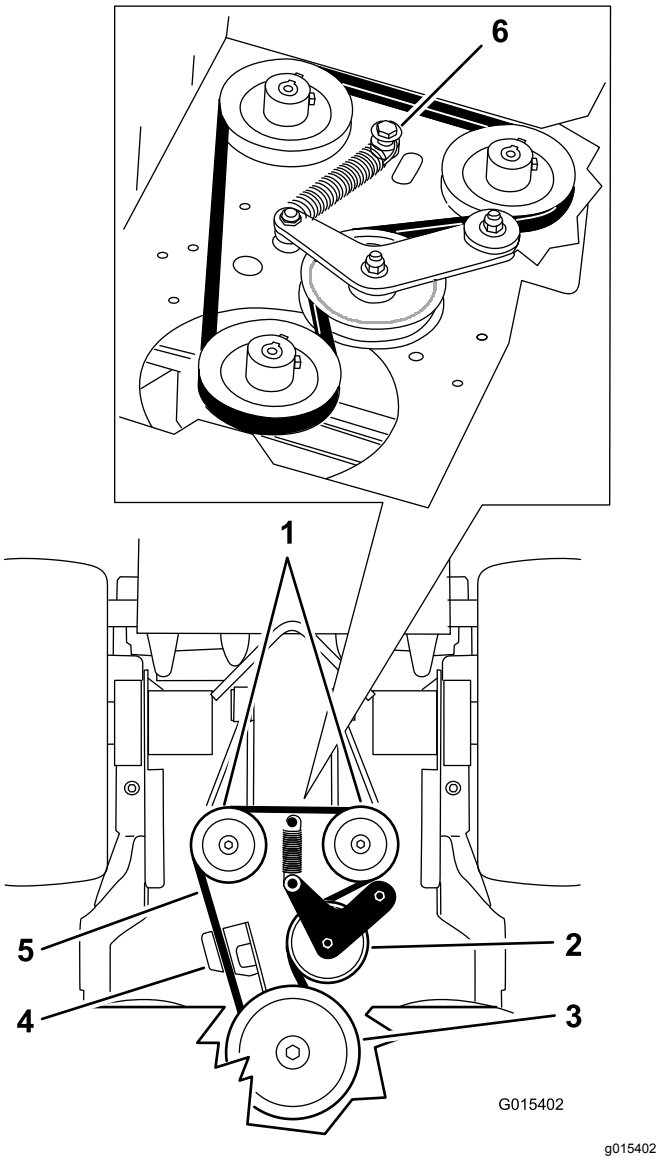

Figure 65

1. Hydraulic pumps
2. Idler pulley
3. Clutch pulley
4. Clutch retainer
5. Pump-drive belt
6. Shoulder bolt, nut, and washer

6. Remove the pump-drive belt (Figure 65).
7. Install the new belt around the clutch and the 2 pump pulleys.
8. Install the spring onto the shoulder bolt and washer, and connect it to the engine deck with the nut (Figure 65).
9. Lower the machine to the operating position.
10. Install the mower-deck belt; refer to Replacing the Mower-Deck Belt (page 43).

Adjusting the Right Motion-Control Lever

If the motion-control levers do not align horizontally, adjust the right motion-control lever.

Note: Adjust the horizontal alignment before adjusting the front to back alignment.

1. Park the machine on a level surface, disengage the PTO, and engage the parking brake.
2. Shut off the engine, remove the key, and wait for all moving parts to stop before leaving the operating position.
3. Push the right motion-control lever down out of the NEUTRAL-LOCK position (Figure 66).
4. Check if the right motion-control lever aligns horizontally with the left motion-control lever (Figure 66).

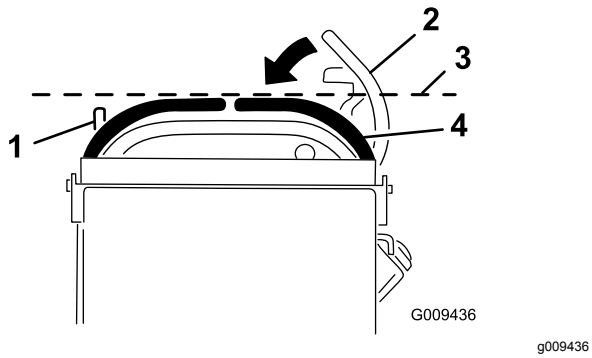

Figure 66

1. Left motion-control lever
2. Right motion-control lever in the NEUTRAL-LOCK position
3. Check the horizontal alignment here.
4. Right motion-control lever

Note: To adjust the right motion-control lever horizontally, adjust the cam.

5. Release the cushion from the rear of the machine.
6. Loosen the nut holding the cam (Figure 67).

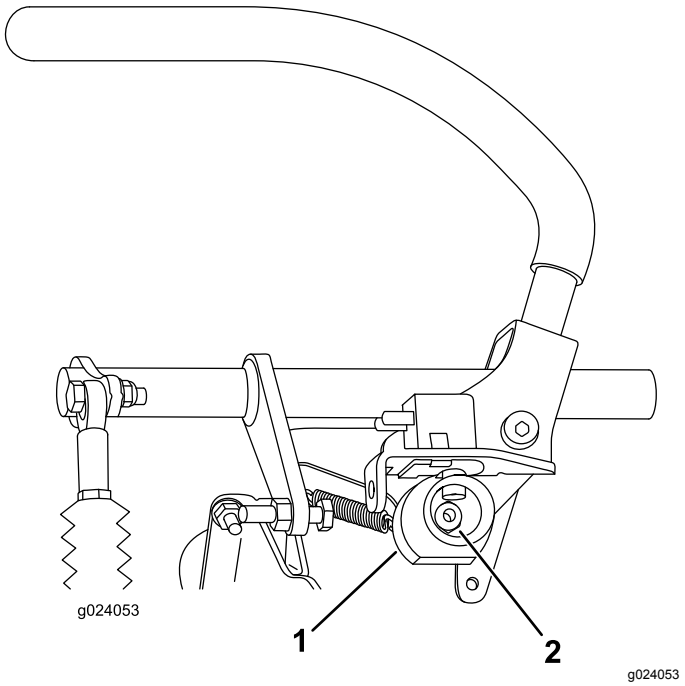

Figure 67

1. Cam
2. Nut

7. Adjust the cam until it aligns with the left motion-control lever and tighten the nut for the cam.

   Note: Moving the cam clockwise (in the vertical position) lowers the handle, while moving it counterclockwise (in the vertical position) raises the handle.

   Important: **Ensure that the flat portion of the cam does not go above a vertical position (right or left); otherwise you may damage the switch.**

Adjusting the Neutral Position for the Motion-Control Levers

Important: **Ensure that the tracking is correct after adjusting the motion-control levers (Figure 68).**

Note: Adjust the horizontal alignment before adjusting the front to back alignment.

If the motion-control levers do not align front to back or the right control lever does not move easily into the NEUTRAL-LOCK position, adjust the neutral position for the levers.

1. After you finish the horizontal alignment, check the front-to-back alignment by slightly pushing the motion-control levers forward to take up any

slack in the linkage for the control levers (Figure 68).

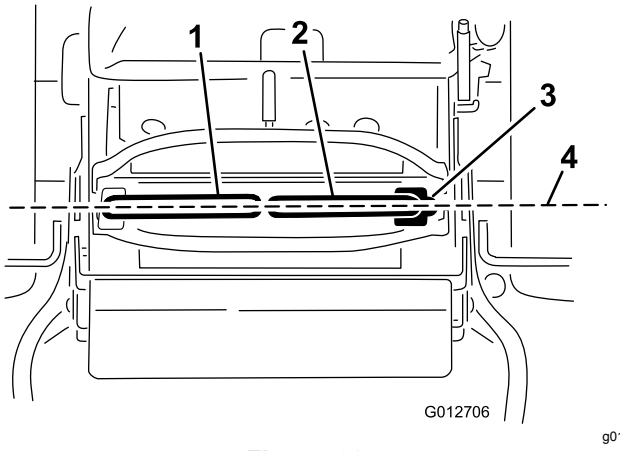

Figure 68

1. Left motion-control lever
2. Right motion-control lever
3. NEUTRAL-LOCK position
4. Align the motion-control levers front to back.

2. Ensure that the right motion-control lever moves easily into the NEUTRAL-LOCK position.

   Note: Turn the cable adjustment clockwise to move the motion-control handle forward. Turn the cable adjustment counterclockwise to move the motion-control handle rearward.

3. Rotate the cable adjustment on the right side when adjustment is needed.

   Note: Adjust the cable adjustment in quarter-turn increments.

4. After the right motion-control lever moves easily into the NEUTRAL-LOCK position, adjust the left motion-control lever to align it with the right motion-control lever.
5. Check for proper tracking; refer to Adjusting the Tracking (page 37).
6. Install the cable lock onto the cable-adjusting nuts to secure the adjustment (Figure 69).

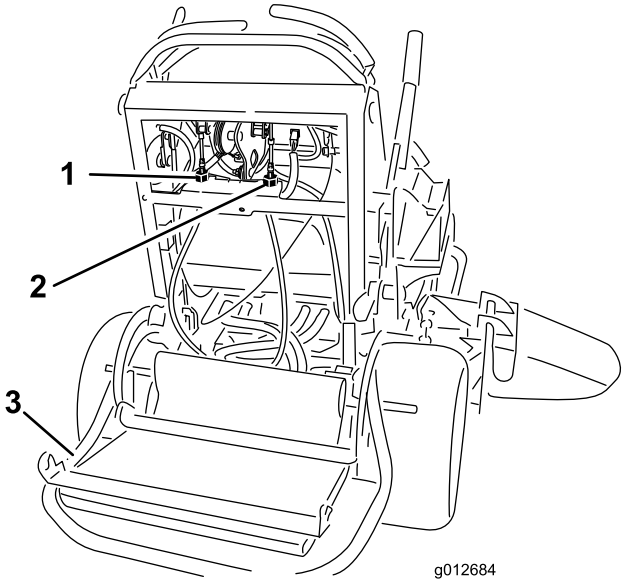

Figure 69

1. Left cable adjustment
2. Cable lock
3. Right cable adjustment

Hydraulic System Maintenance

Hydraulic System Safety

- Seek immediate medical attention if fluid is injected into skin. Injected fluid must be surgically removed within a few hours by a doctor.
- Ensure that all hydraulic-fluid hoses and lines are in good condition and all hydraulic connections and fittings are tight before applying pressure to the hydraulic system.
- Keep your body and hands away from pinhole leaks or nozzles that eject high-pressure hydraulic fluid.
- Use cardboard or paper to find hydraulic leaks.
- Safely relieve all pressure in the hydraulic system before performing any work on the hydraulic system.

Hydraulic System Specifications

Hydraulic Fluid Type: Toro® HYPR-OIL™ 500 hydraulic fluid or Mobil® 1 15W-50 synthetic motor oil.

Hydraulic System Fluid Capacity: 2.0 L (67 fl oz)

Important: **Use the fluid specified. Other fluids could damage the system.**

Checking the Hydraulic Fluid

Service Interval: After the first 8 hours

Every 50 hours

Note: The baffle inside the tank has 2 levels depending if the fluid is warm or cold.

1. Park the machine on a level surface, disengage the PTO, and engage the parking brake.
2. Shut off the engine, remove the key, and wait for all moving parts to stop before leaving the operating position.
3. Clean the area around the cap and the filler neck of the hydraulic tank (Figure 70).

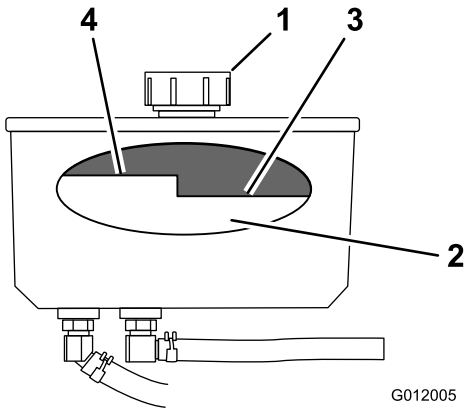

g012005

Figure 70

1. Cap
2. Baffle
3. Cold fluid level—full
4. Hot fluid level—full

4. Remove the cap from the filler neck (Figure 70).

   Note: Look inside to check the fluid level in the reservoir.
5. Add fluid to the reservoir until it reaches the cold level of the baffle.
6. Run the machine at low idle for 15 minutes to allow any air to purge out of the system and to warm the fluid.
7. Shut off the engine, remove the key, and wait for all moving parts to stop before leaving the operating position.
8. Check the fluid level while the fluid is warm. If required, add fluid to the reservoir until it is between the hot level and the cold level.

   Note: The fluid level should be below the hot level of the baffle when the fluid is warm (Figure 70).
9. Install the cap on the filler neck.

Replacing the Hydraulic Fluid

Service Interval: Every 250 hours—Change the hydraulic fluid when using Mobil® 1 oil.

Every 500 hours—Change the hydraulic fluid when using Toro® HYPR-OIL™ 500 hydraulic fluid.

⚠ WARNING

Hot hydraulic fluid can cause severe burns.

Allow the hydraulic fluid to cool before performing any maintenance to the hydraulic system.

1. Park the machine on a level surface, disengage the PTO, and engage the parking brake.
2. Shut off the engine, remove the key, and wait for all moving parts to stop before leaving the operating position.
3. Remove hydraulic reservoir cap.
4. Locate the front hydraulic hose under the hydraulic tank and place a drain pan under the tank (Figure 71).
5. Loosen the hose clamp and move it down the hose.
6. Remove the front hydraulic hose and allow the fluid to run out of the tank.

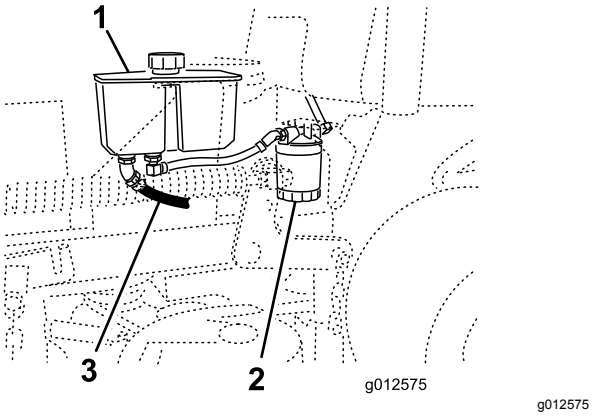

Figure 71

1. Hydraulic tank
2. Hydraulic filter
3. Front hydraulic hose

7. Change the hydraulic filter; refer to Replacing the Hydraulic Filter (page 48).
8. Connect the hydraulic hose under the tank.
9. Add fluid to the tank until it reaches the cold baffle of the tank.

   Important: **Use the specified fluid or equivalent. Other fluids could cause system damage.**
10. Install the hydraulic-tank cap.
11. Start engine and let run for about 2 minutes to purge air from the system.
12. Shut off the engine and check for leaks.

    Note: If 1 or both wheels do not drive, refer to Bleeding the Hydraulic System (page 49).
13. Check the level of the fluid and add fluid, if required.

    Important: **Do not overfill.**

Replacing the Hydraulic Filter

Service Interval: After the first 8 hours

Every 500 hours/Yearly (whichever comes first)

⚠ WARNING

Hot hydraulic fluid can cause severe burns.

Allow the hydraulic fluid to cool before performing any maintenance to the hydraulic system.

1. Park the machine on a level surface, disengage the PTO, and engage the parking brake.
2. Shut off the engine, remove the key, and wait for all moving parts to stop before leaving the operating position.
3. Locate the filter and place a drain pan under the filter (Figure 72).

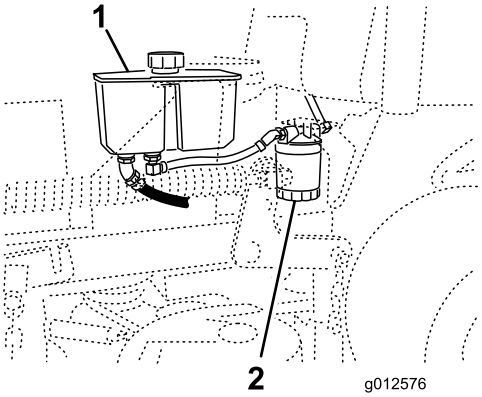

Figure 72

1. Hydraulic tank
2. Hydraulic filter

4. Remove the old filter and wipe the filter-adapter gasket surface clean (Figure 73).
5. Apply a thin coat of hydraulic fluid to the rubber gasket on the replacement filter.
6. Install replacement hydraulic filter onto the filter adapter.
7. Turn the filter clockwise until the rubber gasket contacts the filter adapter and tighten the filter an additional 1/2 turn (Figure 73).

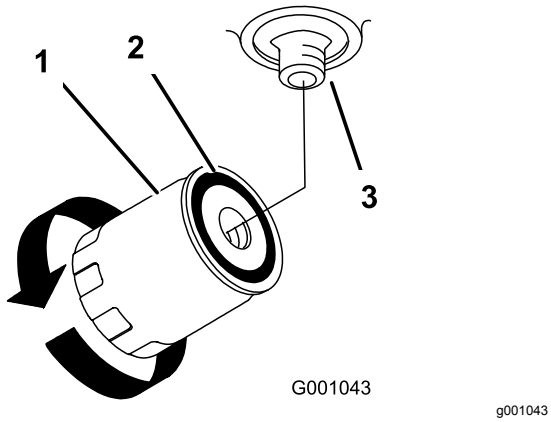

Figure 73

1. Hydraulic filter
2. Gasket
3. Adapter

8. Clean up any spilled fluid.
9. Check the fluid in the reservoir and add fluid to the tank until it reaches the cold baffle of the tank.

   Important: **Use the specified fluid or equivalent. Other fluids could cause system damage.**
10. Start the engine and let it run for about 2 minutes to purge air from the system.
11. Shut off the engine and check for leaks.

    Note: If one or both wheels do not drive, refer to Bleeding the Hydraulic System (page 49).
12. Check the fluid level and add fluid, if required.

    Important: **Do not overfill.**

Bleeding the Hydraulic System

The traction system is self-bleeding, however, it may be necessary to bleed the system if fluid is changed or after work is performed on the system.

1. Park the machine on a level surface, disengage the PTO, and engage the parking brake.
2. Shut off the engine, remove the key, and wait for all moving parts to stop before leaving the operating position.
3. Raise the rear of the machine onto jack stands high enough to raise the drive wheels off the ground.
4. Start the engine and move the throttle control to the idle position.

   Note: If the drive wheel does not rotate, assist the purging of the system by carefully rotating the tire in the forward direction.
5. Check the hydraulic fluid level as it drops, and add fluid as required to maintain the proper level.
6. Repeat this procedure for the opposite wheel.

Checking the Hydraulic Hoses

Service Interval: Every 100 hours

Check the hydraulic hoses for leaks, loose fittings, kinks, loose mounting supports, wear, general weathering, and chemical deterioration. Make any necessary repairs before operating.

Note: Keep areas around the hydraulic system clean from grass and debris buildup.

Note: Extended operating time at high temperatures in a hot climate may lead to deterioration of hoses and seals. Inspect more frequently in a hot climate, and change the hydraulic fluid and filter more frequently.

Mower Deck Maintenance

Servicing the Cutting Blades

To ensure a superior quality of cut, keep the blades sharp. For convenient sharpening and replacement, keep extra blades on hand.

Blade Safety

A worn or damaged blade can break, and a piece of the blade could be thrown toward you or bystanders, resulting in serious personal injury or death.

- Inspect the blades periodically for wear or damage.
- Use care when checking the blades. Wrap the blades or wear gloves, and use caution when servicing the blades. Only replace or sharpen the blades; never straighten or weld them.
- Always inspect the machine to ensure that the blades and blade bolts are not worn or damaged. Replace worn or damaged blades and bolts in sets to preserve balance.
- On multi-bladed machines, take care as rotating 1 blade can cause other blades to rotate.

Before Inspecting or Servicing the Blades

1. Park the machine on a level surface, disengage the PTO, and engage the parking brake.
2. Shut off the engine, remove the key, and disconnect the spark-plug wires from the spark plugs.

Inspecting the Blades

Service Interval: Before each use or daily

1. Inspect the cutting edges (Figure 74).
2. If the edges are not sharp or have nicks, remove and sharpen the blade; refer to Sharpening the Blades (page 51).
3. Inspect the blades, especially in the curved area.
4. If you notice any cracks, wear, or a slot forming in this area, immediately install a new blade (Figure 74).

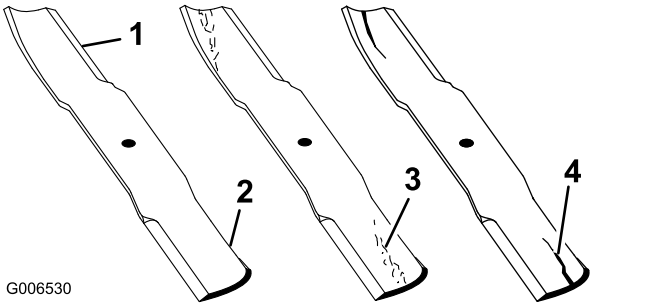

Figure 74

1. Cutting edge
2. Curved area
3. Wear/slot forming
4. Crack

Checking for Bent Blades

1. Rotate the blades until the ends face forward and backward.
2. Measure from a level surface to the cutting edge, position **A**, of the blades (Figure 75).

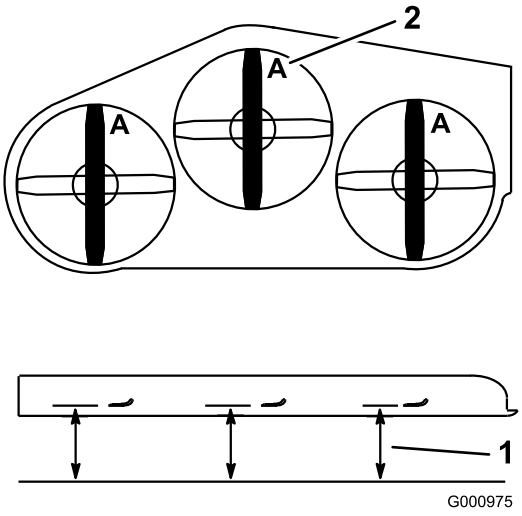

Figure 75

1. Measure here from blade to hard surface
2. Position A

3. Rotate the opposite ends of the blades forward.
4. Measure from a level surface to the cutting edge of the blades at the same position as in step 2 above.

   Note: The difference between the dimensions obtained in steps 2 and 3 must not exceed 3 mm (1/8 inch).

   Note: If this dimension exceeds 3 mm (1/8 inch), replace the blade.

⚠ WARNING

A blade that is bent or damaged could break apart and could critically injure you or bystanders.

- **Always replace a bent or damaged blade with a new blade.**
- **Do not file or create sharp notches in the edges or surfaces of the blade.**

Removing the Blades

Replace the if a blade hits a solid object, is out of balance, or is bent. For best performance and continued safety conformance of the machine, use genuine Toro replacement blades. Replacement blades made by other manufacturers may result in non-conformance with safety standards.

1. Hold the blade end using a rag or thickly padded glove.
2. Remove the blade bolt, curved washer, and blade from the spindle shaft (Figure 76).

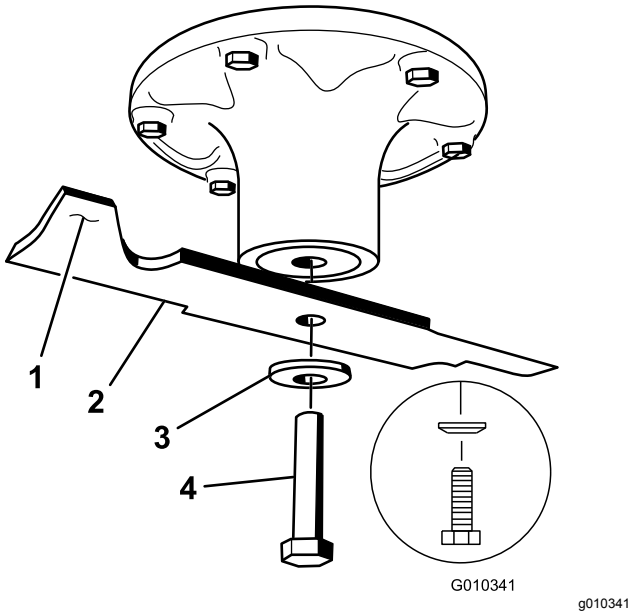

Figure 76

1. Sail area of the blade
2. Blade
3. Curved washer
4. Blade bolt

Sharpening the Blades

1. Use a file to sharpen the cutting edge at both ends of the blade (Figure 77).

   Note: Maintain the original angle.

   Note: The blade retains its balance if the same amount of material is removed from both cutting edges.

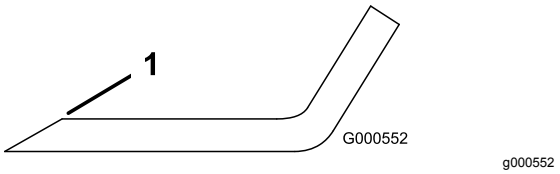

Figure 77

1. Sharpen at original angle.

2. Check the balance of the blade by putting it on a blade balancer (Figure 78).

   Note: If the blade stays in a horizontal position, the blade is balanced and can be used.

   Note: If the blade is not balanced, file some metal off the end of the sail area only (Figure 77).

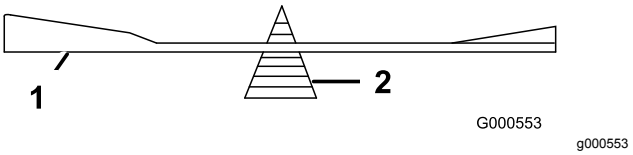

Figure 78

1. Blade
2. Balancer

3. Repeat this procedure until the blade is balanced.

Installing the Blades

1. Install the blade onto the spindle shaft (Figure 79).

   Important: **The curved part of the blade must be pointing upward toward the inside of the deck to ensure proper cutting.**

2. Install the spring disk and blade bolt (Figure 79).

   Note: The spring-disk cone must be installed toward the bolt head (Figure 79).

3. Torque the blade bolt to 115 to 150 N·m (85 to 110 ft-lb).

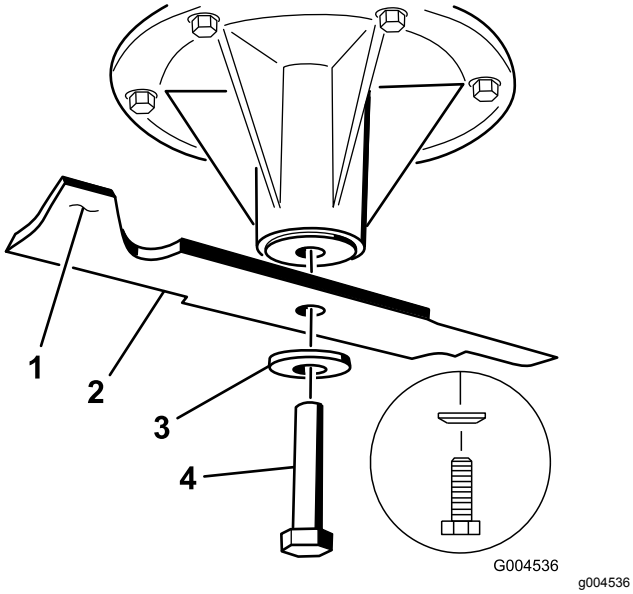

Figure 79

1. Sail area of the blade
2. Blade
3. Spring disk
4. Blade bolt

Leveling the Mower Deck

Preparing the Machine

Ensure that the mower deck is level any time you install the mower deck or when you see an uneven cut on your lawn.

Level the mower deck side to side before adjusting the front-to-rear slope.

1. Park the machine on a level surface, disengage the PTO, and engage the parking brake.
2. Shut off the engine, remove the key, and disconnect the spark-plug wires from the spark plugs.
3. Check the tire pressure of both drive tires; refer to Checking the Tire Pressure (page 39).
4. Check the mower deck for bent blades; remove and replace any bent blades; refer to Checking for Bent Blades (page 50).
5. Lower the mower deck to the 76 mm (3 inch) height-of-cut position.

Checking the Swivel and Yoke Distances

1. Check the distance between the swivels, measuring at the center of the swivels (center-to-center length) on each threaded rod (Figure 80).

   Note: Ensure that the length is 49.5 cm (19-1/2 inches) for 91 cm (36 inch) mower decks and 43.7 cm (17-3/16 inches) for 102 cm (40 inch) mower decks.
2. Loosen the jam nuts at the **front** swivel (Figure 80).
3. Using the jam nuts, adjust the length of the threaded rod to achieve the correct distance.
4. Tighten the jam nuts at the **front** swivel (Figure 80).

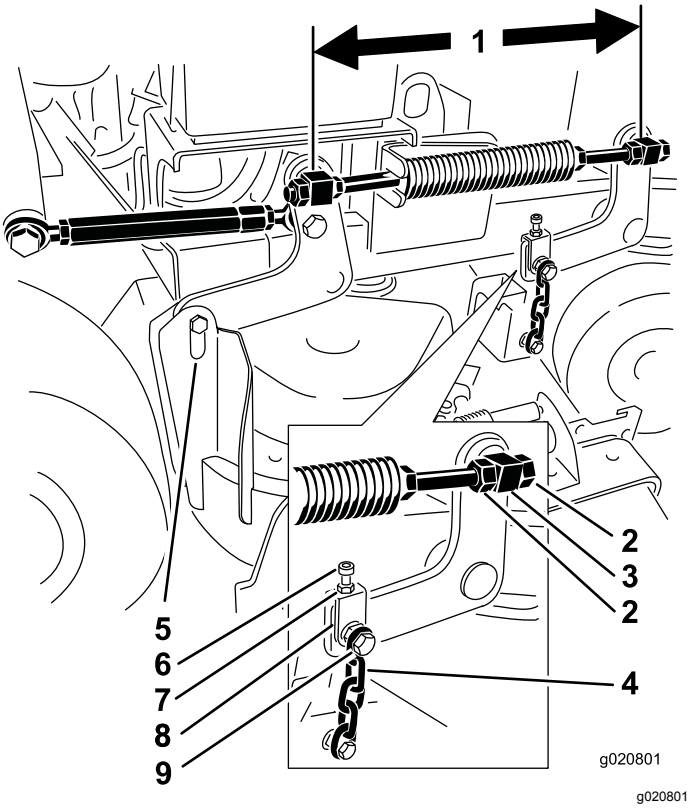

Figure 80

1. Measure here at the center of the swivels (center-to-center length).
2. Swivel jam nuts
3. Front swivel
4. Front chain
5. Rear chain
6. Adjustment bolt
7. Jam nut
8. Yoke
9. Upper chain bolt

5. Check the distance between the yoke and the deck hanger arm at each yoke.

   Note: This distance needs to be 11 mm (7/16 inch) as shown in Figure 81.
6. If adjustment is needed, loosen the upper chain bolt (Figure 80).
7. Loosen the jam nut and adjust the adjustment bolt to achieve the correct distance as shown in Figure 81.
8. Tighten the jam nut and the upper chain bolt.

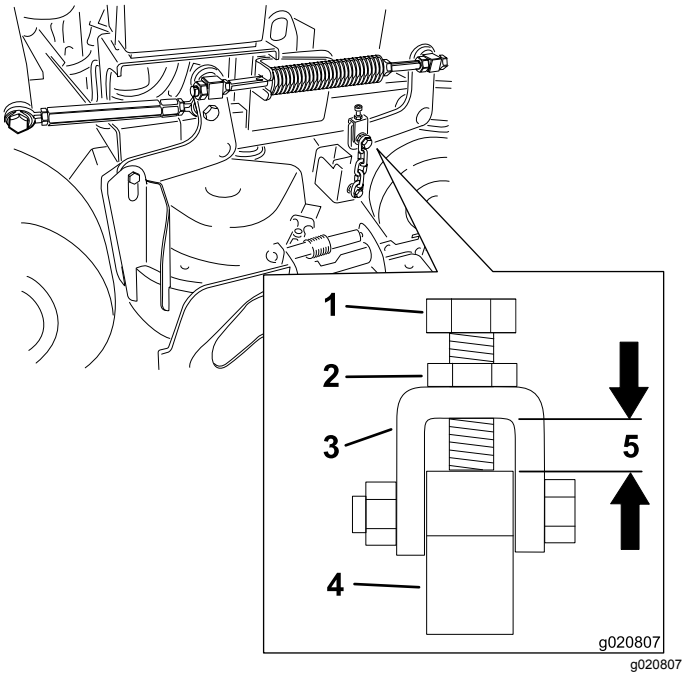

Figure 81

1. Adjustment bolt
2. Jam nut
3. Yoke
4. Deck hanger arm
5. The distance needs to be 11 mm (7/16 inch).

Adjusting the Right Side Front-to-Rear Mower Deck Pitch

1. Position the right blade front-to-rear (Figure 82).
2. Measure the right blade at the **C** location, from a level surface to the cutting edge of the blade tip, and record this measurement (Figure 82).
3. Measure the right blade at the **D** location, from a level surface to the cutting edge of the blade tip, and record this measurement (Figure 82).

   Note: The mower blade should be 6 to 10 mm (1/4 to 3/8 inch) lower at position **C** than at position **D** (Figure 82). If it is not correct, proceed to the following steps.
4. Loosen the jam nuts at the right and left front swivels (Figure 80).
5. Using the right jam nuts, adjust the length of the right threaded rod to achieve the 6 to 10 mm (1/4 to 3/8 inch) front-to-rear pitch.
6. Tighten the jam nuts at the right and left front swivels (Figure 80).

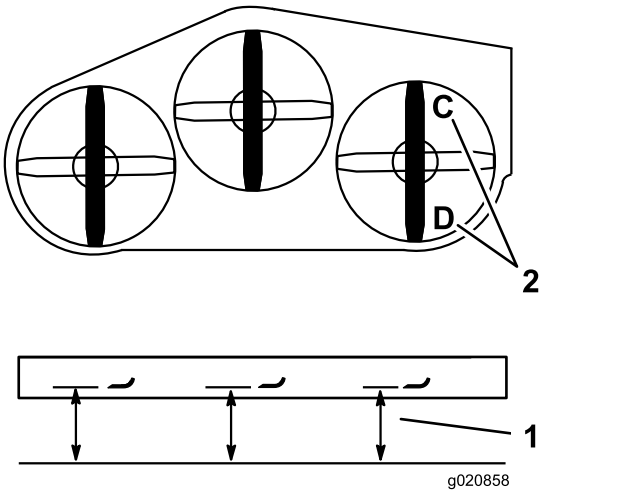

g020858

Figure 82

1. Measure here from the blade to the level surface.
2. Measure at C and D.

Matching the Rear of the Mower Deck

1. Position the left and right blades front-to-rear.
2. Measure the left blade at the **B** location, from a level surface to the cutting edge of the blade tip, and record this measurement (Figure 83).
3. Measure the right blade at the **D** location, from a level surface to the cutting edge of the blade tip, and record this measurement (Figure 83).

   Note: The measurement at position **B** needs to be within 3 mm (1/8 inch) of the measurement at position **D** (Figure 83). If it is not correct, proceed to the following steps.
4. Loosen the jam nuts at the left, front swivel (Figure 80).
5. Using the left jam nuts, adjust the length of the left hand threaded rod until location **B** matches location **D**.
6. Tighten the jam nuts at the left front swivel (Figure 80).

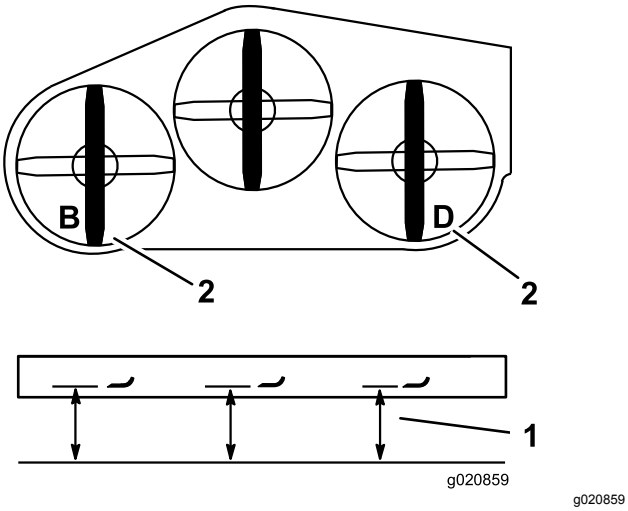

Figure 83

1. Measure here from the blade to the level surface.
2. Measure at B and D

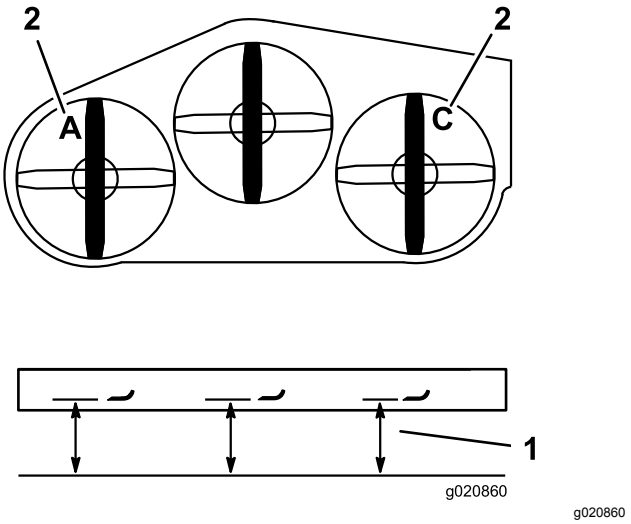

Figure 84

1. Measure here from the blade to the level surface.
2. Measure at A and C.

Leveling the Front of the Mower Deck

1. Position the left and right blades front-to-rear.
2. Inspect the front chains and ensure that each chain has tension.

   Note: If either chain is loose, adjust the threaded rod with the loose chain to achieve tension on that chain.
3. Measure the left blade at the **A** location, from a level surface to the cutting edge of the blade tip, and record this measurement (Figure 84).
4. Measure the right blade at the **C** location, from a level surface to the cutting edge of the blade tip, and record this measurement (Figure 84).

   Note: The measurement between location **A** and **C** needs to be within 3 mm (1/8 inch). If it is not correct, proceed to the following steps.
5. Loosen the upper chain bolts (Figure 80).
6. Loosen the jam nuts on each yoke (Figure 80).
7. Adjust the adjustment bolts in the yokes, at locations **A** and **C**, to achieve the correct height (Figure 84).
8. Tighten the jam nuts and upper chain bolts (Figure 80).

Matching the Height of Cut

1. Lower the mower to the 76 mm (3 inch) height-of-cut position.
2. Position the right blade front-to-rear (Figure 82).
3. Measure the right blade at location **C**, from a level surface to the cutting edge of the blade tip, and record this measurement (Figure 84).

   Note: The measurement at location **C** needs to be within an 3 mm (1/8 inch) of the 76 mm (3 inches) height-of-cut setting. If it is not correct, proceed to the following steps.
4. Loosen the jam nuts at both ends of the turnbuckle (Figure 85).

   Note: The end of the turnbuckle with the groove has left threads (Figure 85).
5. Adjust the turnbuckle to raise or lower the deck height to achieve 76 mm (3 inches) at location **C**.
6. Tighten the jam nuts at both ends of the turnbuckle.
7. Check and ensure that the mower-deck lift lever latches into the transport position.

   Note: If it does not latch into the transport position, adjust the turn buckle until it latches into the transport position.
8. Tighten the jam nuts.

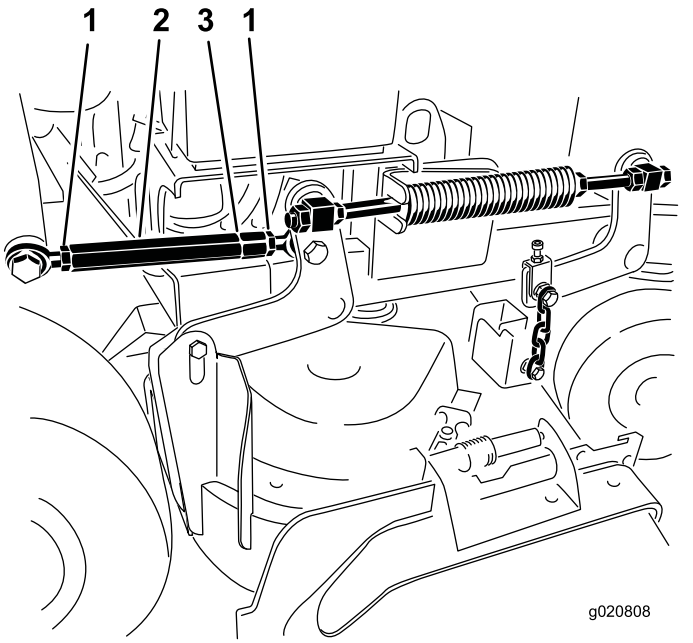

Figure 85

1. Jam nut
2. Turnbuckle
3. Groove indicating left threads

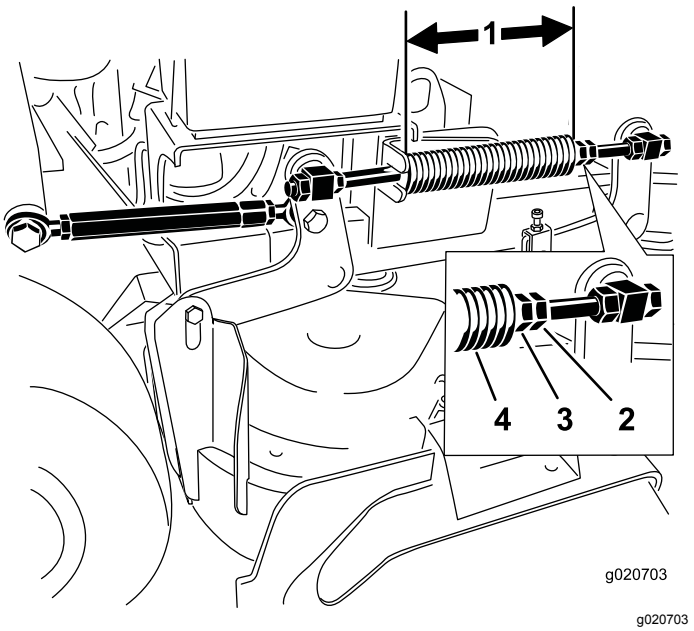

Figure 86

1. 25.7 cm (10-1/8 inch) for 102 cm (40 inch) mower decks and 28.2 cm (11-1/8 inch) for 91 cm (36 inch) mower decks
2. Spring jam nut
3. Front nut
4. Compression spring

Adjusting the Compression Spring

Note: Adjusting the compression spring alters how much the deck floats and the amount of effort needed to lift the deck when using the height-of-cut lever.

- More spring compression reduces the lever lift force required and causes the deck to float more.
- Less spring compression increases the lever lift force required and causes the deck to float less.

1. Raise the height-of-cut lever and lock it into the transport position.
2. Check the length of the compression spring.

   Note: Nominal length is 28.2 cm (11-1/8 inches) for 91 cm (36 inch) mower decks and 25.7 cm (10-1/8 inches) for 102 cm (40 inch) mower decks (Figure 86).
3. Adjust this distance by loosening the spring-jam nut and turning the nut in front of each spring (Figure 86).
4. Lock the nut into position by tightening the spring-jam nut (Figure 86).
5. Repeat this procedure for the opposite deck-lift spring.

Replacing the Grass Deflector

⚠ WARNING

An uncovered discharge opening could allow the machine to throw objects toward you or bystanders, resulting in serious injury. Also, contact with the blade could occur.

Do not operate the machine unless you install a cover plate, a mulch plate, grass deflector, or bagger.

1. Remove the locknut, bolt, spring, and spacer holding the deflector to the pivot brackets (Figure 87).

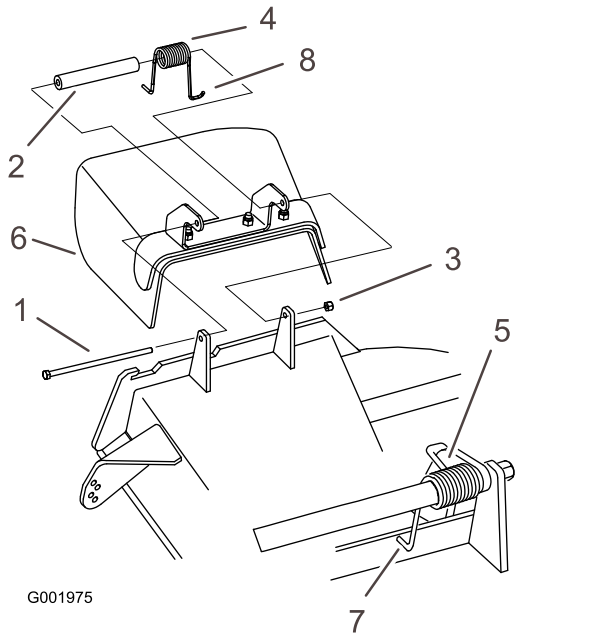

Figure 87

1. Bolt
2. Spacer
3. Locknut
4. Spring
5. Spring (installed)
6. Grass deflector
7. **J**-hook end of the spring

2. Remove the damaged or worn grass deflector.
3. Place the spacer and the spring onto the grass deflector.
4. Place 1 **J**-hook end of the spring behind the deck edge.

   Note: Make sure that 1 **J**-hook end of spring is installed behind deck edge before installing the bolt as shown in Figure 87.
5. Install the bolt and the nut.
6. Place 1 **J**-hook end of the spring around the grass deflector (Figure 87).

   Important: **The grass deflector must be able to rotate. Lift the deflector up to the full open position, and ensure that it rotates into the full-down position.**

Cleaning

Cleaning under the Mower Deck

Service Interval: Before each use or daily

Before each use or daily

Remove the grass buildup under the mower daily.

1. Park the machine on a level surface, disengage the PTO, move the motion-control levers to the NEUTRAL-LOCK position, and engage the parking brake.
2. Shut off the engine, remove the key, and wait for all moving parts to stop before leaving the operating position.
3. Raise the front of the machine and use jack stands to support the mower.

Disposing of Waste

Engine oil, batteries, hydraulic fluid, and engine coolant are pollutants to the environment. Dispose of these according to your state and local regulations.

Storage

Storage Safety

- Let the engine cool before storing the machine.
- Do not store the machine or fuel near flames or drain the fuel indoors.

Cleaning and Storage

Service Interval: Before storage

Before storage

1. Disengage the power takeoff (PTO), engage the parking brake, shut off the engine, and remove the key.
2. Remove grass clippings, dirt, and grime from the external parts of the entire machine, especially the engine.

   Important: **You can wash the machine with a mild detergent and water. Do not pressure-wash the machine. Avoid excessive use of water, especially near the drive system and engine. Pressure-washing can force dirt and water into critical parts, such as spindle bearings and electrical switches.**
3. Clean any dirt and chaff from the outside of the engine cylinder-head fins and blower housing.
4. Check the brake; refer to Testing the Parking Brake (page 41).
5. Service the air cleaner; refer to Servicing the Air Cleaner (page 29).
6. Grease the machine; refer to Lubrication (page 27).
7. Change the engine oil; refer to Changing the Engine Oil (page 31).
8. Check the tire pressure; refer to Checking the Tire Pressure (page 39).
9. For long-term storage, do the following:
   A. Add fuel stabilizer/conditioner to the fuel in the tank as directed by the fuel stabilizer manufacturer.
   B. Run the engine to distribute the conditioned fuel through the fuel system for 5 minutes.
   C. Shut off the engine, allow it to cool, and drain the fuel tank; refer to Draining the Fuel Tank (page 33), or operate the engine until it shuts off.
   D. Start the engine and allow it to run until it shuts off. Repeat with the choke engaged (if applicable) until the engine does not start.
   E. Dispose of fuel properly; recycle it according to local regulations.

      Important: **Do not store fuel containing stabilizer/conditioner longer than the duration recommended by the fuel-stabilizer manufacturer.**
10. Remove the spark plug(s) and check its condition; refer to Servicing the Spark Plug (page 32).
11. With the spark plug(s) removed from the engine, pour 15 ml (2 tablespoons) of engine oil into the spark-plug hole, and use the starter to crank the engine and distribute the oil inside the cylinder.
12. Install the spark plug(s) but do not connect the wire to the spark plug(s).
13. Check and tighten all fasteners. Repair or replace any part that is damaged or missing.
14. Paint all scratched or bare metal surfaces with paint from an Authorized Service Dealer.
15. Store the machine in a clean, dry, garage or storage area. Remove the key from the switch and store it in a memorable place. Cover the machine to protect it and keep it clean.

Troubleshooting

Problem	Possible Cause	Corrective Action
The engine does not start, starts hard, or fails to keep running.	1. The fuel tank is empty or the shutoff valve is closed. 2. The choke control is not engaged. 3. A spark-plug wire is loose or disconnected. 4. A spark plug is pitted, fouled, or the gap is incorrect. 5. The air cleaner is dirty. 6. Dirt is in the fuel filter. 7. Dirt, water, or stale fuel is in the fuel system. 8. The gap between the safety-interlock switches is not correct.	1. Fill the fuel tank with fuel and open the valve 2. Engage the choke control. 3. Install the wire on spark plug. 4. Install a new, correctly gapped spark plug. 5. Service the air-cleaner element. 6. Replace the fuel filter. 7. Contact an Authorized Service Dealer. 8. Contact an Authorized Service Dealer.
The engine loses power.	1. The engine load is excessive. 2. The air cleaner is dirty. 3. The oil level in the crankcase is low. 4. The cooling fins and air passages under the engine blower housing are plugged. 5. A spark plug is pitted, fouled, or the gap is incorrect. 6. The vent hole in the fuel cap is plugged. 7. Dirt is in the fuel filter. 8. Dirt, water, or stale fuel is in the fuel system.	1. Reduce the ground speed. 2. Service the air-cleaner element. 3. Add oil to the crankcase. 4. Remove the obstruction from the cooling fins and air passages. 5. Install a new, correctly gapped spark plug. 6. Clean or replace the fuel cap. 7. Replace the fuel filter. 8. Contact an Authorized Service Dealer.
The engine overheats.	1. The engine load is excessive. 2. The oil level in the crankcase is low. 3. The cooling fins and air passages under the engine blower housing are plugged.	1. Reduce the ground speed. 2. Add oil to the crankcase. 3. Remove the obstruction from the cooling fins and air passages.
The machine does not drive.	1. The hydraulic-fluid reservoir is low. 2. Air is in the hydraulic system. 3. A pump-drive belt slips. 4. A pump-drive belt idler spring is missing. 5. The pump-bypass valves are open.	1. Add hydraulic fluid to the reservoir. 2. Bleed the air out the hydraulic system. 3. Replace the pump-drive belt. 4. Replace the pump-drive belt idler spring. 5. Tighten the bypass valves. Torque to 12 to 15 N·m (9 to 11 ft-lb).
There is abnormal vibration.	1. Cutting blade(s) is/are bent or unbalanced. 2. A blade-mounting bolt is loose. 3. The engine-mounting bolts are loose. 4. An engine pulley, idler pulley, or blade pulley is loose. 5. An engine pulley is damaged. 6. A blade spindle is bent.	1. Install new cutting blade(s). 2. Tighten the blade-mounting bolt. 3. Tighten the engine-mounting bolts. 4. Tighten the appropriate pulley. 5. Contact an Authorized Service Dealer. 6. Contact an Authorized Service Dealer.

Problem	Possible Cause	Corrective Action
The cutting height is uneven.	1. Blade(s) are not sharp.	1. Sharpen the blade(s).
	2. Cutting blade(s) is/are bent.	2. Install new cutting blade(s).
	3. The mower deck is not level.	3. Level the mower deck side-to-side position.
	4. The mower deck pitch is wrong.	4. Adjust the front-to-rear pitch.
	5. The underside of mower deck is dirty.	5. Clean the underside of the mower deck.
	6. The tire pressure is not correct.	6. Adjust the tire pressure.
	7. A blade spindle is bent.	7. Contact an Authorized Service Dealer.
The blades do not rotate.	1. A pump-drive belt is worn, loose or broken.	1. Check the belt tension.
	2. A pump-drive belt is off pulley.	2. Install the drive belt and check the adjusting shafts and belt guides for the correct position.
	3. A mower-deck belt is worn, loose or broken.	3. Install the new deck belt.
	4. A mower-deck belt is off the pulley.	4. Install the deck pulley and check the idler pulley, idler arm and spring for the correct position and function.
	5. An idler spring is broken or missing.	5. Replace the spring.
	6. The electric clutch is out of adjustment.	6. Adjust the clutch air gap.
	7. The clutch connector or wire is damaged.	7. Contact an Authorized Service Dealer.
	8. The electric clutch is damaged.	8. Contact an Authorized Service Dealer.
	9. The safety-interlock system prevents blade rotation.	9. Contact an Authorized Service Dealer.
	10. The PTO switch is faulty.	10. Contact an Authorized Service Dealer.

Schematics

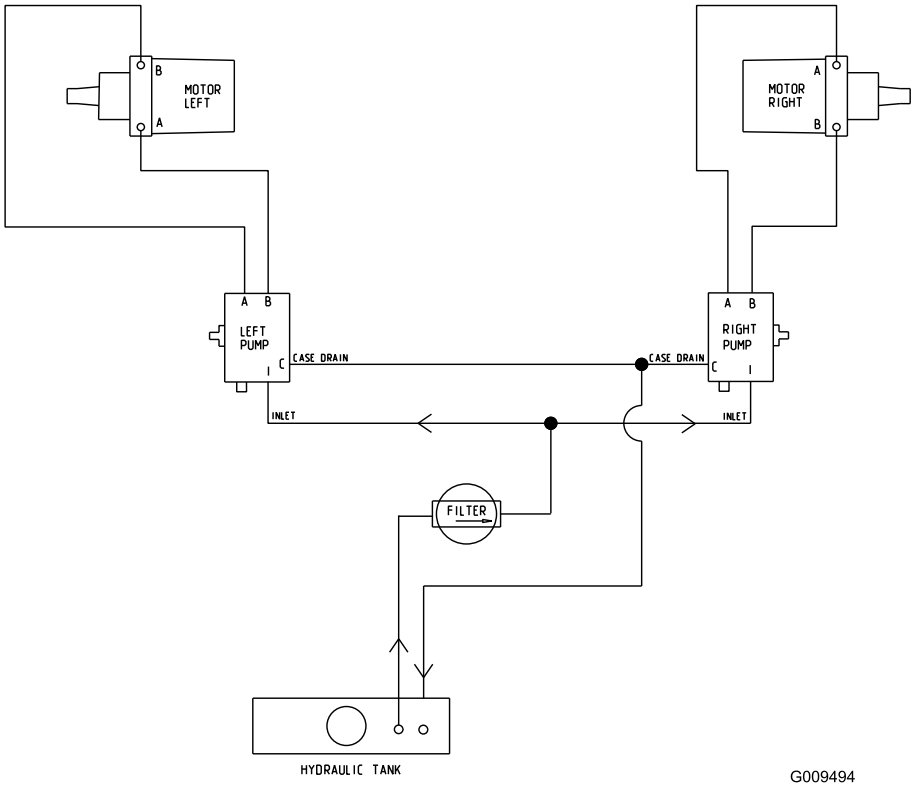

g009494

Hydraulic Schematic (Rev. A)

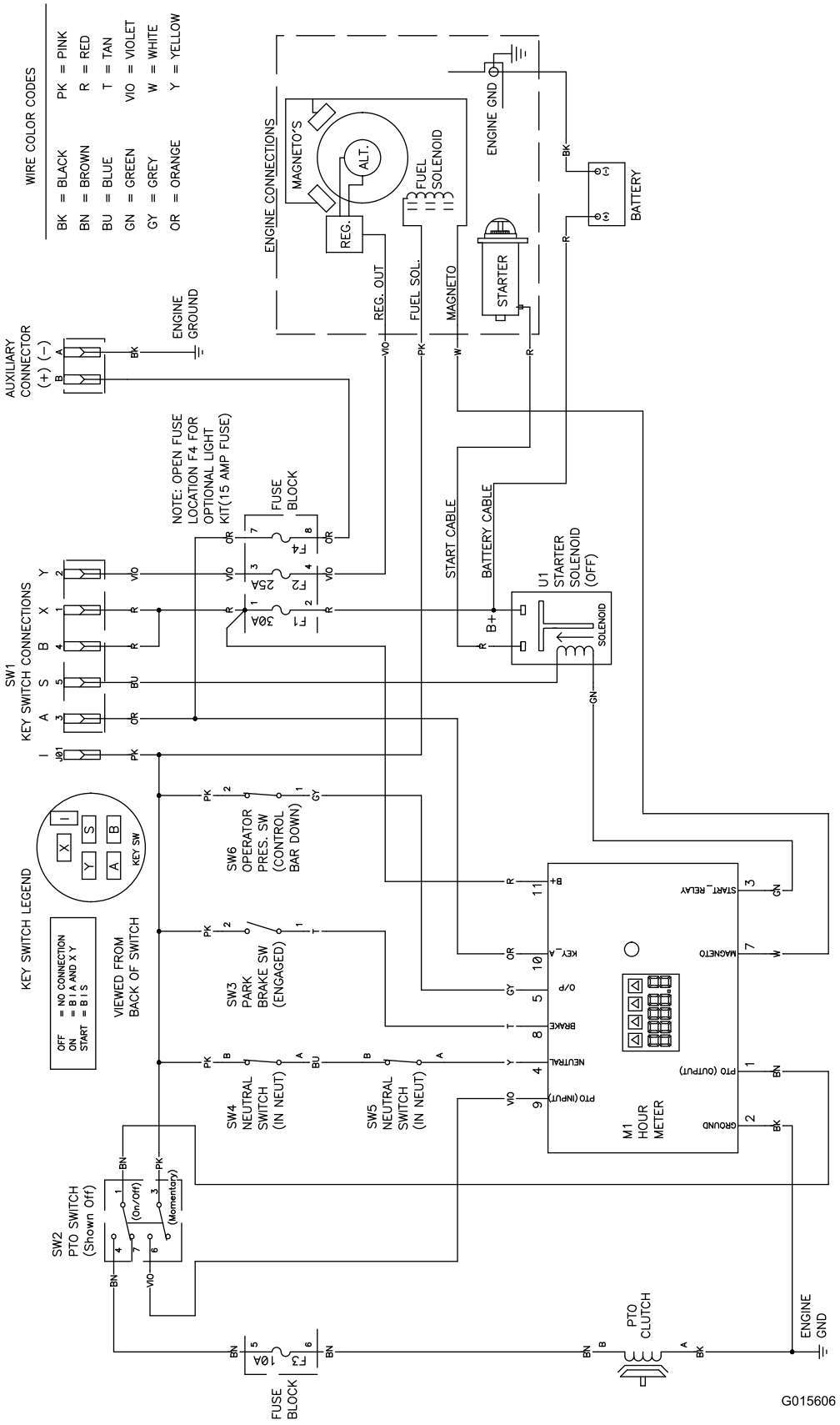

g015606

Electrical Schematic (Rev. A)

Notes:

Notes:

California Proposition 65 Warning Information

What is this warning?

You may see a product for sale that has a warning label like the following:



WARNING: Cancer and Reproductive Harm—www.p65Warnings.ca.gov.

What is Prop 65?

Prop 65 applies to any company operating in California, selling products in California, or manufacturing products that may be sold in or brought into California. It mandates that the Governor of California maintain and publish a list of chemicals known to cause cancer, birth defects, and/or other reproductive harm. The list, which is updated annually, includes hundreds of chemicals found in many everyday items. The purpose of Prop 65 is to inform the public about exposure to these chemicals.

Prop 65 does not ban the sale of products containing these chemicals but instead requires warnings on any product, product packaging, or literature with the product. Moreover, a Prop 65 warning does not mean that a product is in violation of any product safety standards or requirements. In fact, the California government has clarified that a Prop 65 warning "is not the same as a regulatory decision that a product is 'safe' or 'unsafe.'" Many of these chemicals have been used in everyday products for years without documented harm. For more information, go to https://oag.ca.gov/prop65/faqs-view-all.

A Prop 65 warning means that a company has either (1) evaluated the exposure and has concluded that it exceeds the "no significant risk level"; or (2) has chosen to provide a warning based on its understanding about the presence of a listed chemical without attempting to evaluate the exposure.

Does this law apply everywhere?

Prop 65 warnings are required under California law only. These warnings are seen throughout California in a wide range of settings, including but not limited to restaurants, grocery stores, hotels, schools, and hospitals, and on a wide variety of products. Additionally, some online and mail order retailers provide Prop 65 warnings on their websites or in catalogs.

How do the California warnings compare to federal limits?

Prop 65 standards are often more stringent than federal and international standards. There are various substances that require a Prop 65 warning at levels that are far lower than federal action limits. For example, the Prop 65 standard for warnings for lead is 0.5 µg/day, which is well below the federal and international standards.

Why don't all similar products carry the warning?

- Products sold in California require Prop 65 labelling while similar products sold elsewhere do not.
- A company involved in a Prop 65 lawsuit reaching a settlement may be required to use Prop 65 warnings for its products, but other companies making similar products may have no such requirement.
- The enforcement of Prop 65 is inconsistent.
- Companies may elect not to provide warnings because they conclude that they are not required to do so under Prop 65; a lack of warnings for a product does not mean that the product is free of listed chemicals at similar levels.

Why does Toro include this warning?

Toro has chosen to provide consumers with as much information as possible so that they can make informed decisions about the products they buy and use. Toro provides warnings in certain cases based on its knowledge of the presence of one or more listed chemicals without evaluating the level of exposure, as not all the listed chemicals provide exposure limit requirements. While the exposure from Toro products may be negligible or well within the "no significant risk" range, out of an abundance of caution, Toro has elected to provide the Prop 65 warnings. Moreover, if Toro does not provide these warnings, it could be sued by the State of California or by private parties seeking to enforce Prop 65 and subject to substantial penalties.