Form No. 3425-521 Rev A

TORO®

Count on it.

Parts Catalog

# ProCore® SR70-S

## Aerator

**Model No. 09934—Serial No. 318000113 and Up**

Register at www.Toro.com.
Original Instructions (EN)

CE

*3425-521* A

# Ordering Replacement Parts

To order replacement parts, please supply the part number, the quantity, and the description of each part desired.

### Understanding Reference Numbers

Each identified part in an illustration has a reference number. The reference number for a part also appears in the parts list, along with other information about the part.

This catalog uses two special reference number formats, one to indicate parts in a service assembly and another to indicate the quantity of a given part in an illustration.

### Service Assembly Reference Numbers

Parts in service assemblies have reference numbers in the form a:b. The a represents the reference number of the entire service assembly and the b represents a sequential number unique to each part within the service assembly.

For example, a wheel assembly might be identified by reference number 6, the tire by 6:1, the valve by 6:2, and the wheel by 6:3. When you order the assembly identified by reference number 6, you receive all parts identified by reference numbers 6:1,6:2, and 6:3. However, you may also order any part individually. Reference numbers of this type appear in illustration and in parts lists.

### Reference Numbers Indicating Quantity

In an illustration, if a reference number indicates more than one part, the reference number has the form nX y. The n represents the quantity of the part, the X is the multiplication symbol, and the y represents the reference number.

For example, in an illustration, the reference number 2X 37 means that two of the parts identified by reference number 37 are indicated.

# Contents

Drive Assembly . . . . . 4
Gearbox Assembly No. SG504000-03 . . . . . 5
PTO Shaft Assembly No. 137-7323 . . . . . 6
Frame and Roller Assembly . . . . . 7
Left to Right Crankshaft Assembly . . . . . 8
Center Crankshaft Assembly . . . . . 9
Center to Right Crankshaft Assembly . . . . . 10
Idler Assembly . . . . . 11
Connecting Rod Assembly . . . . . 12
Hinge Assembly . . . . . 13
Linkage Arm Assembly . . . . . 14
Head and Spring Assembly . . . . . 15
Screen and Hood Assembly . . . . . 16
Rear Guard Assembly . . . . . 17
Attachments and Accessories . . . . . 18

© 2019—The Toro® Company
8111 Lyndale Avenue South
Bloomington, MN 55420



Contact us at www.Toro.com.
Printed in the USA.
All Rights Reserved

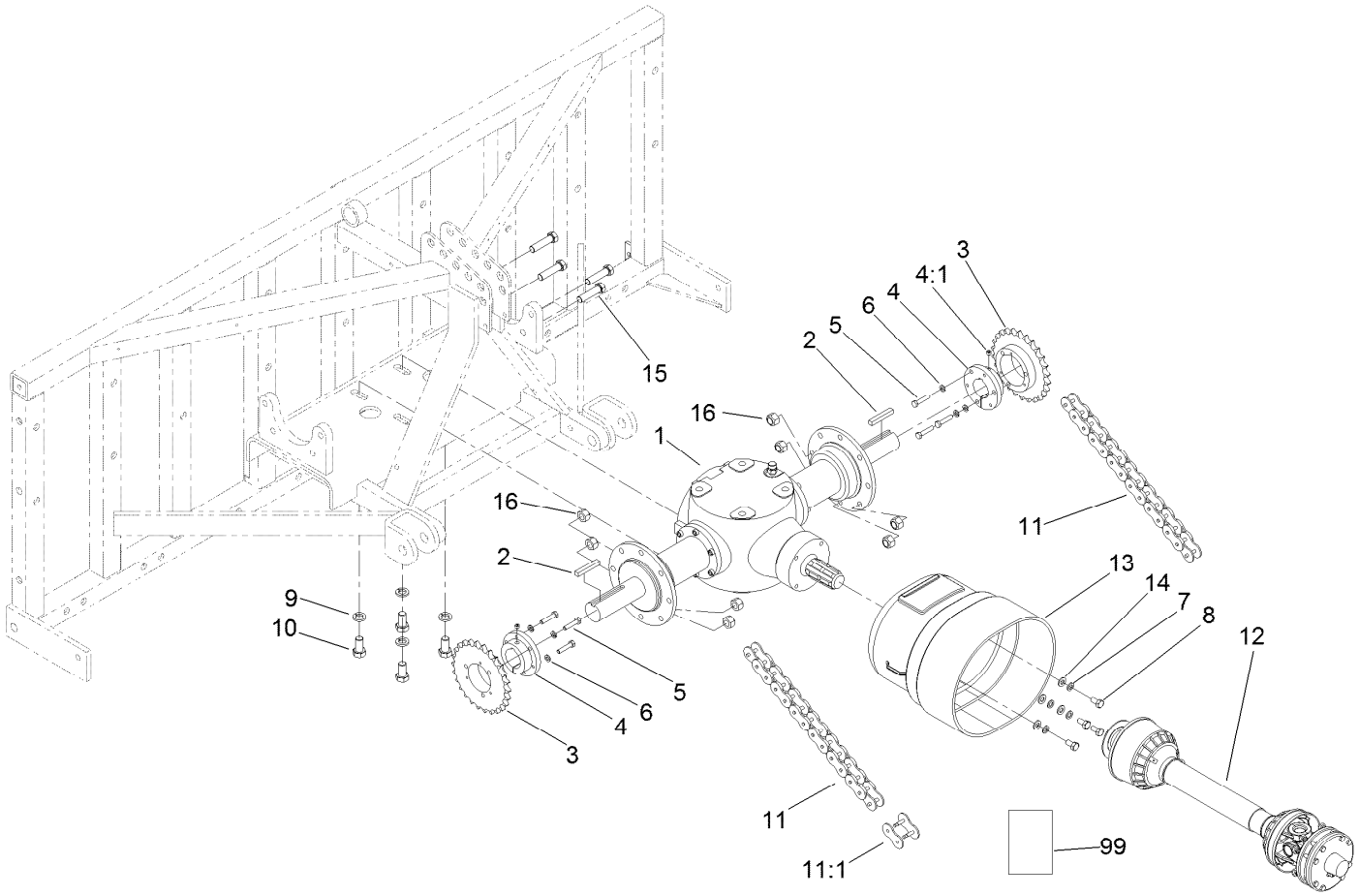


# Drive Assembly

| Ref. | Part Number | Qty. | Description |
|---|---|---|---|
| 1 | SG504000-03 | 1 | Gearbox ASM |
| 2 | 80-6140 | 2 | Key-Square |
| 3 | SG517026 | 2 | Gearbox-Sprocket |
| 4 | SG527054 | 2 | Sprocket-Hub |
| 4:1 | 3246-4 | 1 | Screw-Set |
| 5 | 5-1470 | 6 | Screw-HH |
| 6 | 3253-4 | 6 | Washer-Lock |
| 7 | 48-9590 | 4 | Washer-Lock |
| 8 | 33115-020 | 4 | Screw-HH |
| 9 | 3253-8 | 4 | Washer-Lock |

| Ref. | Part Number | Qty. | Description |
|---|---|---|---|
| 10 | 33118-030 | 4 | Screw-HH |
| 11 | SG580154 | 2 | Chain-O-Ring |
| 11:1 | SG581083 | 1 | Link-Master |
| 12 | 137-7323 | 1 | PTO Shaft ASM |
| 13 | SG4170401 | 1 | Cone-Shaft |
| 14 | 3256-24 | 4 | Washer-Flat |
| 15 | SG562562 | 8 | Screw-HH |
| 16 | 99-4371 | 8 | Nut-Lock |
| 99 | 138-9038 | 1 | Decal-Danger, Entanglement |

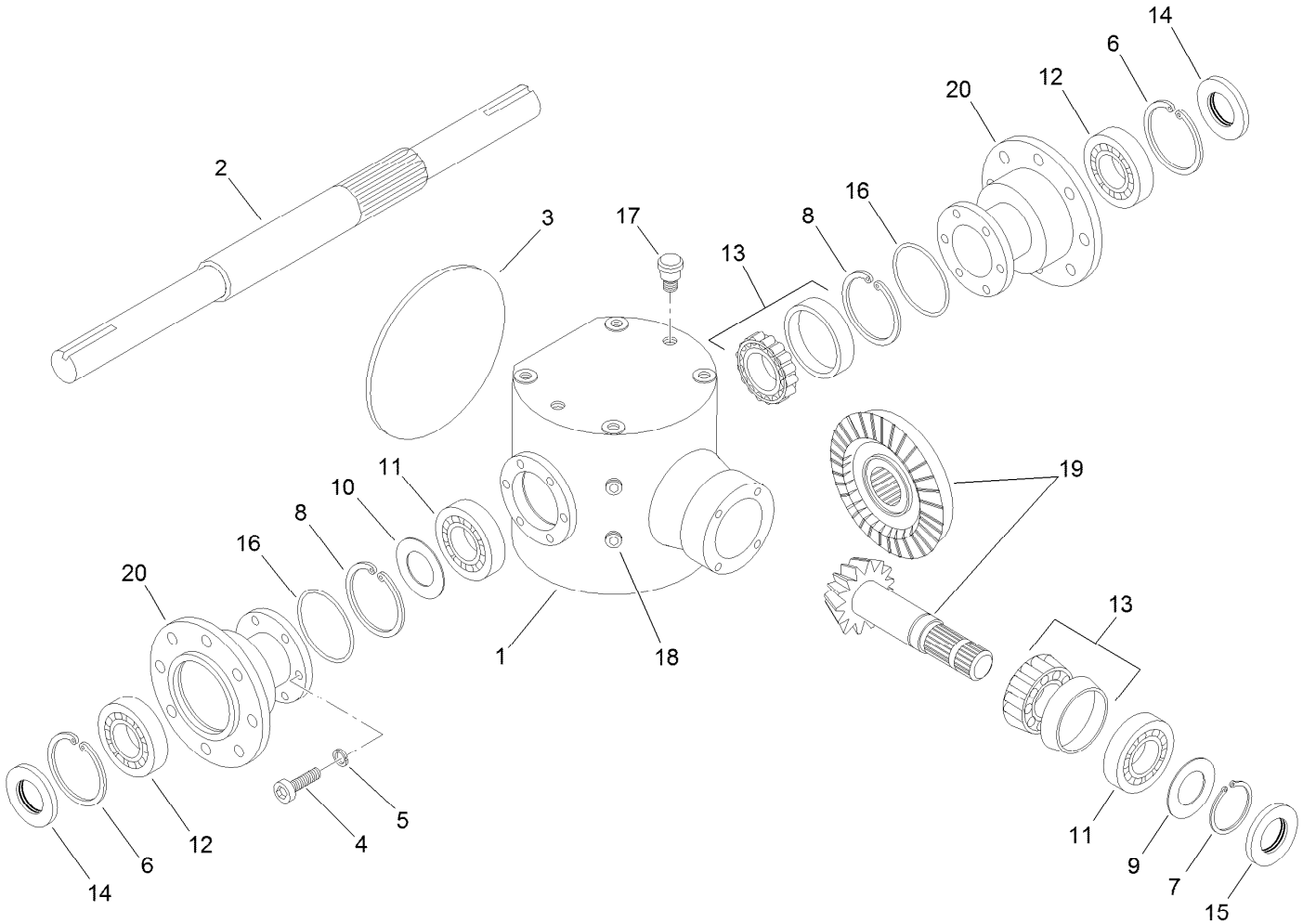


# Gearbox Assembly No. SG504000-03

| Ref. | Part Number | Qty. | Description |
|---|---|---|---|
| 1 | | 1 | Housing-Gearbox ● |
| 2 | 119-3221 | 1 | Shaft-Gearbox, Output |
| 3 | 119-3222 | 1 | Cover-Housing, Gearbox |
| 4 | 119-3244 | 12 | Screw-HSH |
| 5 | 119-3249 | 12 | Washer-Disc, Spring |
| 6 | 119-3223 | 2 | Circlip-Internal |
| 7 | 119-3224 | 1 | Circlip-External |
| 8 | 119-3225 | 2 | Circlip-External |
| 9 | 119-3226 | 1 | Shim Kit |
| 10 | 119-3227 | 1 | Shim Kit |

| Ref. | Part Number | Qty. | Description |
|---|---|---|---|
| 11 | 119-3228 | 2 | Bearing-Ball |
| 12 | 119-3229 | 2 | Bearing-Ball |
| 13 | 119-3230 | 2 | Bearing-Roller Gearbox |
| 14 | 119-3245 | 2 | Seal-Oil |
| 15 | 119-3231 | 1 | Seal-Oil |
| 16 | 119-3246 | 2 | Seal-Oil |
| 17 | 119-3218 | 1 | Plug-Breather |
| 18 | 119-3219 | 3 | Plug-HSH |
| 19 | 119-3232 | 1 | Gear-Bevel, Gearbox |
| 20 | 119-3247 | 2 | Housing-Gearbox |

● Not serviced separately

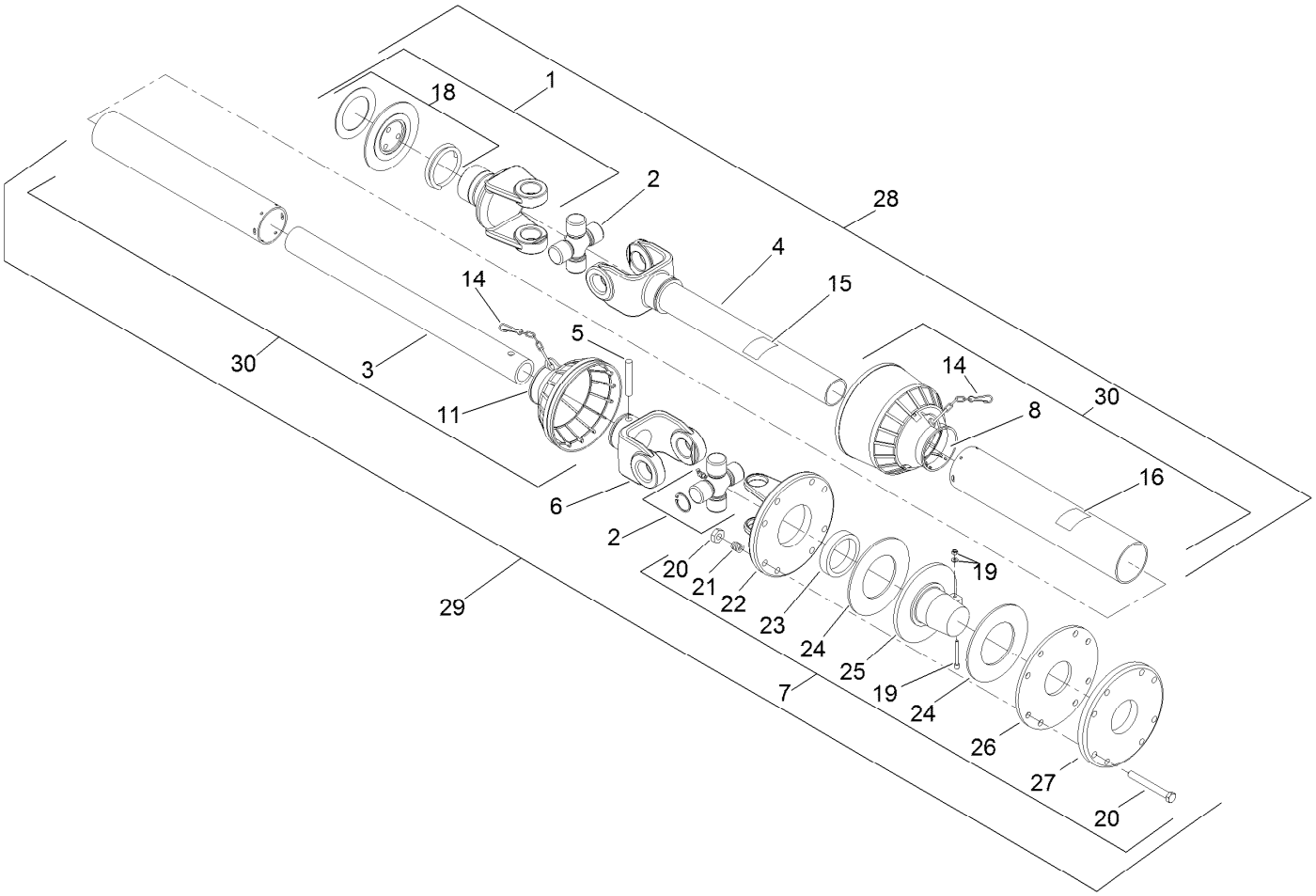


# PTO Shaft Assembly No. 137-7323

| Ref. | Part Number | Qty. | Description |
|---|---|---|---|
| 1 | 01-282-2240 | 1 | Yoke-Rs |
| 2 | 136-3942 | 2 | Cross And Bearing Kit |
| 3 | | 1 | Tube-Inner ■ |
| 4 | 136-3943 | 1 | Yoke And Tube ASM |
| 5 | 119-3134 | 1 | Pin-Roll |
| 6 | 01-282-2100 | 1 | Yoke-Tube, Inner |
| 7 | 119-3136 | 1 | Clutch ASM |
| 8 | 136-3944 | 1 | Bearing-Shield, Outer |
| 11 | | 1 | Bearing-Shield, Inner ■ |
| 14 | 119-3113 | 2 | Chain-Safety |
| 15 | 119-3114 | 1 | Decal-Danger |
| 16 | 119-3115 | 1 | Decal-Danger |
| 17 | 136-3937 | 1 | Booklet-Instruction, Usa ● |
| 18 | 119-3117 | 1 | Ball And Collar Kit |
| 19 | 136-3947 | 1 | Pin-Taper |
| 20 | 119-3119 | 8 | Bolt And Nut ASM |
| 21 | 119-3143 | 8 | Spring |
| 22 | | 1 | Yoke-Flange ■ |
| 23 | | 1 | Bushing ■ |
| 24 | 119-3145 | 2 | Lining-Clutch, PTO |
| 25 | | 1 | Hub ■ |
| 26 | 119-3147 | 1 | Plate-Pressure |
| 27 | 119-3148 | 1 | Plate-Outer |
| 28 | 136-3946 | 1 | Half Shaft ASM |
| 29 | 136-3948 | 1 | Half Shaft ASM |
| 30 | 136-3949 | 1 | Complete Shield ASM |
| 31 | 136-3935 | 6 | Screw-Self TAP ● |

● Not illustrated

■ Not serviced separately

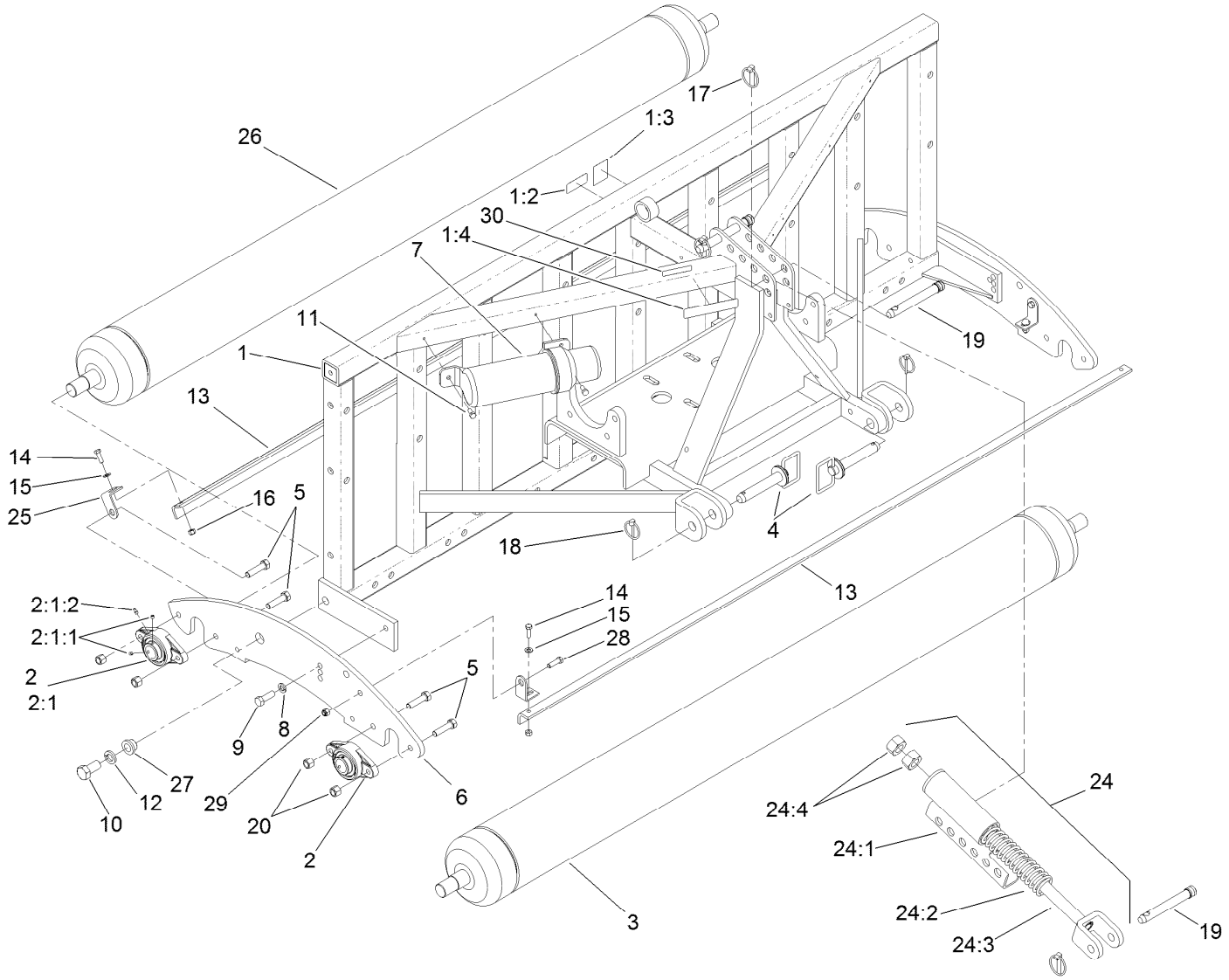


# Frame and Roller Assembly

| Ref. | Part Number | Qty. | Description |
|---|---|---|---|
| 1 | 120-1071 | 1 | Frame ASM |
| 1:2 | 117-7052 | 1 | Decal-No Oil |
| 1:3 | 100-3612 | 1 | Decal-Warning |
| 1:4 | 127-4235 | 1 | Decal-Warning, PTO |
| 2 | SG637070-03 | 4 | Bearing-Roller |
| 2:1 | | 1 | Bearing-Flange ● |
| 2:1:1 | 3245-35 | 2 | Screw-Set, HSH |
| 2:1:2 | 302-19 | 1 | Fitting-Grease |
| 3 | SG627070-03 | 1 | Roller-Main, Large |
| 4 | 112-4378 | 2 | Pin-Hitch |
| 5 | SG271517 | 8 | Screw-HH |
| 6 | SG639070-01 | 2 | Boot-Roller, Double |
| 7 | SG999018 | 1 | Canister-Manual, Operators |
| 8 | 3253-7 | 2 | Washer-Lock |
| 9 | 325-6 | 2 | Screw-HH |
| 10 | 328-24 | 2 | Screw-HH |
| 11 | 322-3 | 2 | Screw-HH |
| 12 | 3253-9 | 2 | Washer-Lock |
| 13 | SG678918-03 | 2 | Scraper Bar |

| Ref. | Part Number | Qty. | Description |
|---|---|---|---|
| 14 | 322-5 | 4 | Screw-HH |
| 15 | 3256-23 | 4 | Washer-Plain |
| 16 | 3296-29 | 4 | Nut-Lock, NI |
| 17 | 100-5389 | 3 | Pin-Lynch |
| 18 | 92-1298 | 2 | Pin-Lynch |
| 19 | SG715450 | 3 | Pin-Link, Top |
| 20 | 3296-23 | 8 | Nut-Lock, NI |
| 24 | SG115070 | 1 | Top Link Spring ASM |
| 24:1 | 117-7137-03 | 1 | Link-Adapter, Top |
| 24:2 | SG330080-03 | 1 | Spring-Top Link |
| 24:3 | 117-7136-03 | 1 | Bracket-Spring Rod |
| 24:4 | SG330081 | 2 | Nut-Hex |
| 25 | 119-0955-03 | 4 | Clip-Scraper |
| 26 | SG627071-03 | 1 | Roller-Main, Small |
| 27 | SG639073 | 2 | Bushing-Flange |
| 28 | 323-7 | 2 | Screw-HH |
| 29 | 3296-39 | 2 | Nut-Lock, NI |
| 30 | 133-8061 | 1 | Decal-Warning |

● Not serviced separately

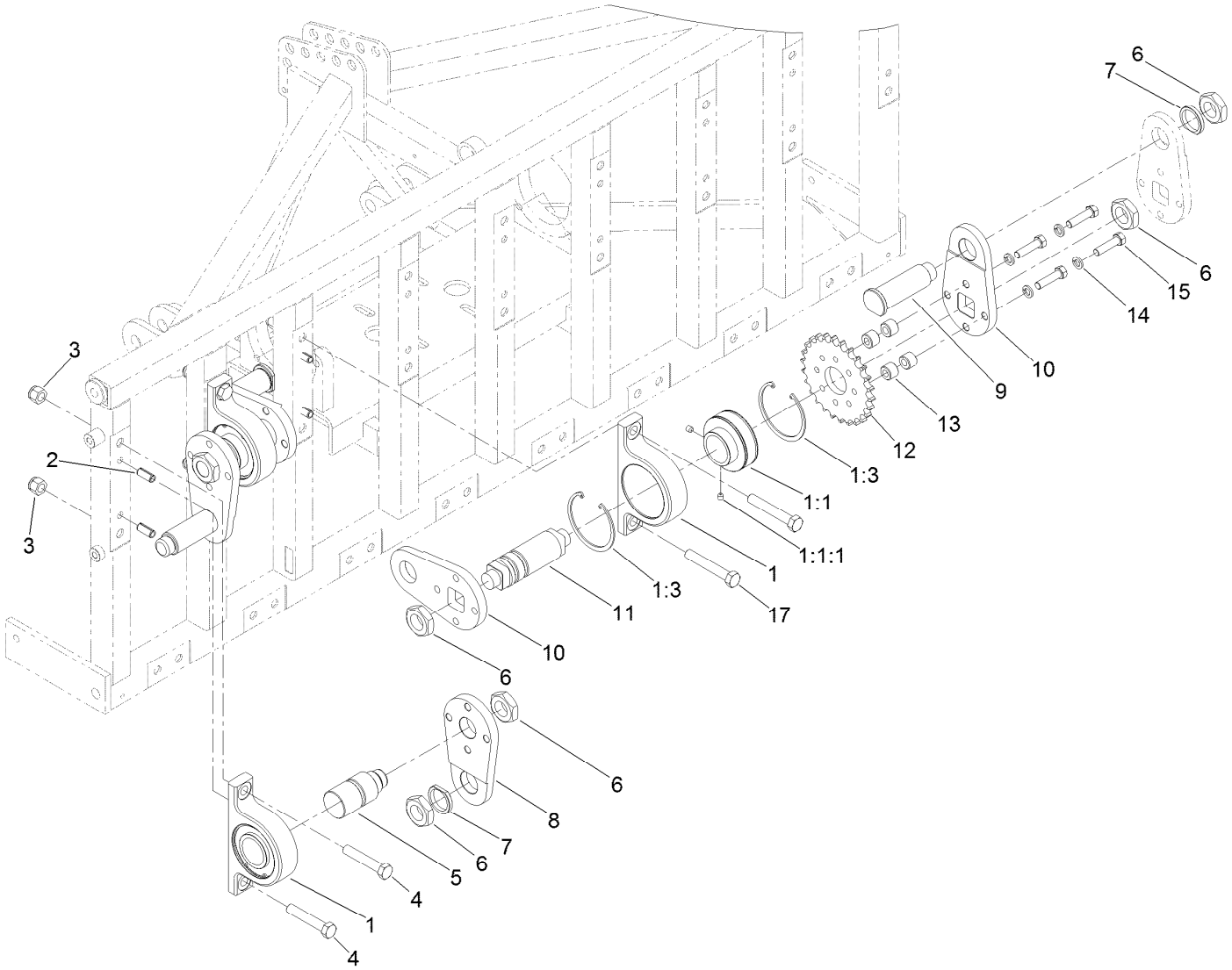


# Left to Right Crankshaft Assembly

| Ref. | Part Number | Qty. | Description |
|---|---|---|---|
| 1 | 121-6905 | 3 | Main Bearing Housing ASM |
| 1:1 | | 1 | Bearing-Ball ● |
| 1:1:1 | 99-0195 | 2 | Screw-Set, HSH |
| 1:3 | SG427540 | 2 | Ring-Retaining |
| 2 | 105-1041 | 6 | Pin-Spring |
| 3 | 3296-53 | 6 | Nut-Lock, NI |
| 4 | 327-14 | 4 | Screw-HH |
| 5 | SG217557 | 1 | Shaft-Stub, Outside |
| 6 | SG267200 | 8 | Nut-Hex |
| 7 | SG247540 | 3 | Washer-Clipped |

| Ref. | Part Number | Qty. | Description |
|---|---|---|---|
| 8 | SG207054 | 1 | Arm-Crank |
| 9 | SG257054 | 3 | Pin-Crank |
| 10 | SG217054 | 4 | Arm-Crank |
| 11 | SG217354 | 2 | Crankshaft |
| 12 | SG217026 | 1 | Sprocket-Crank |
| 13 | SG267500 | 4 | Spacer |
| 14 | 3253-7 | 4 | Washer-Lock |
| 15 | SG271517 | 4 | Screw-HH |
| 17 | 327-16 | 2 | Screw-HH |

● Not serviced separately

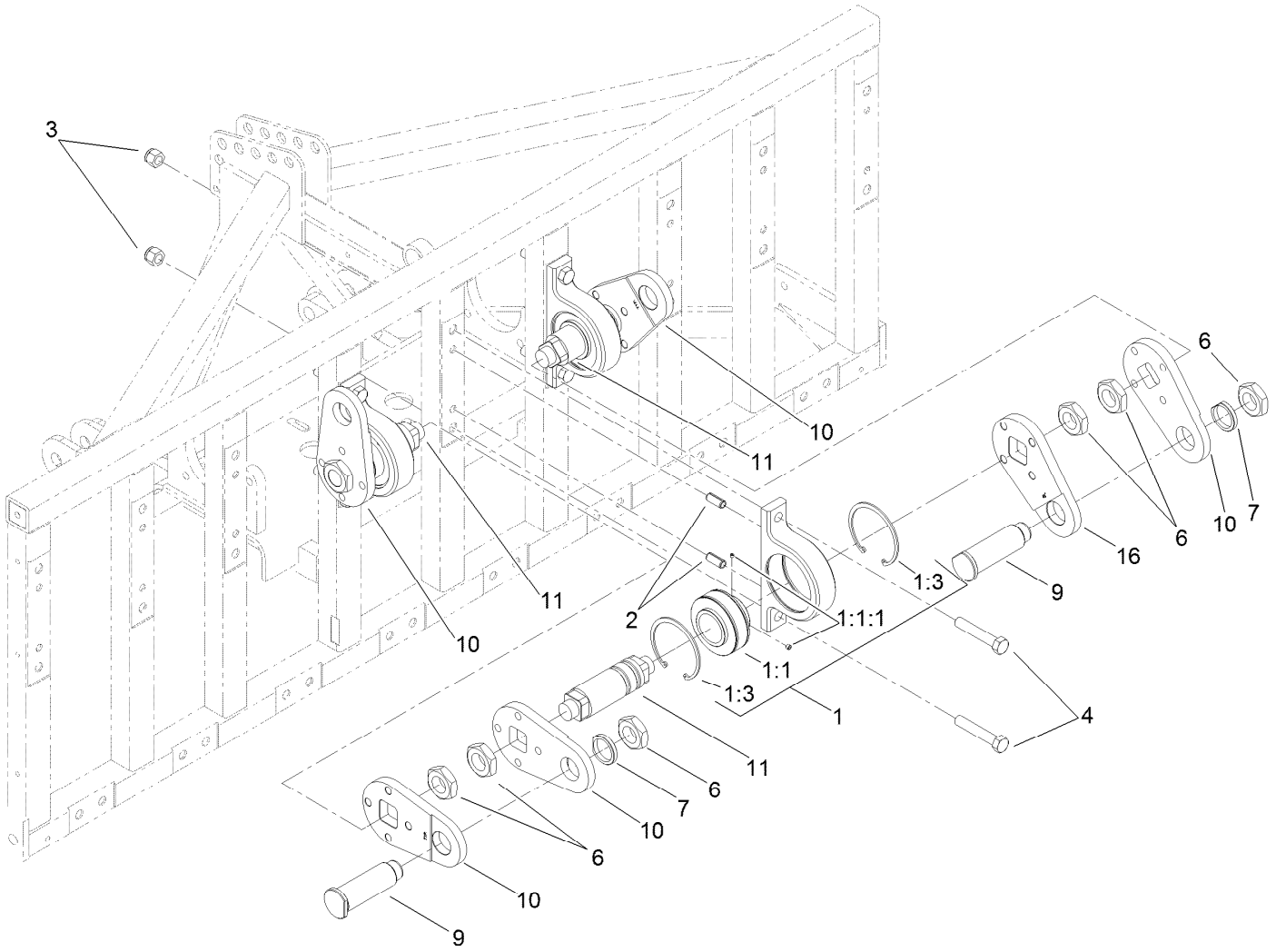


# Center Crankshaft Assembly

| *Ref.* | *Part Number* | *Qty.* | *Description* |
|---|---|---|---|
| 1 | 121-6905 | 3 | Main Bearing Housing ASM |
| 1:1 | | 1 | Bearing-Ball ● |
| 1:1:1 | 99-0195 | 2 | Screw-Set, HSH |
| 1:3 | SG427540 | 2 | Ring-Retaining |
| 2 | 105-1041 | 6 | Pin-Spring |
| 3 | 3296-53 | 6 | Nut-Lock, NI |
| 4 | 327-14 | 6 | Screw-HH |
| 6 | SG267200 | 8 | Nut-Hex |
| 7 | SG247540 | 2 | Washer-Clipped |
| 9 | SG257054 | 2 | Pin-Crank |
| 10 | SG217054 | 5 | Arm-Crank |
| 11 | SG217354 | 3 | Crankshaft |
| 16 | SG217554 | 1 | Arm-Crank, 45 DEG |

● Not serviced separately

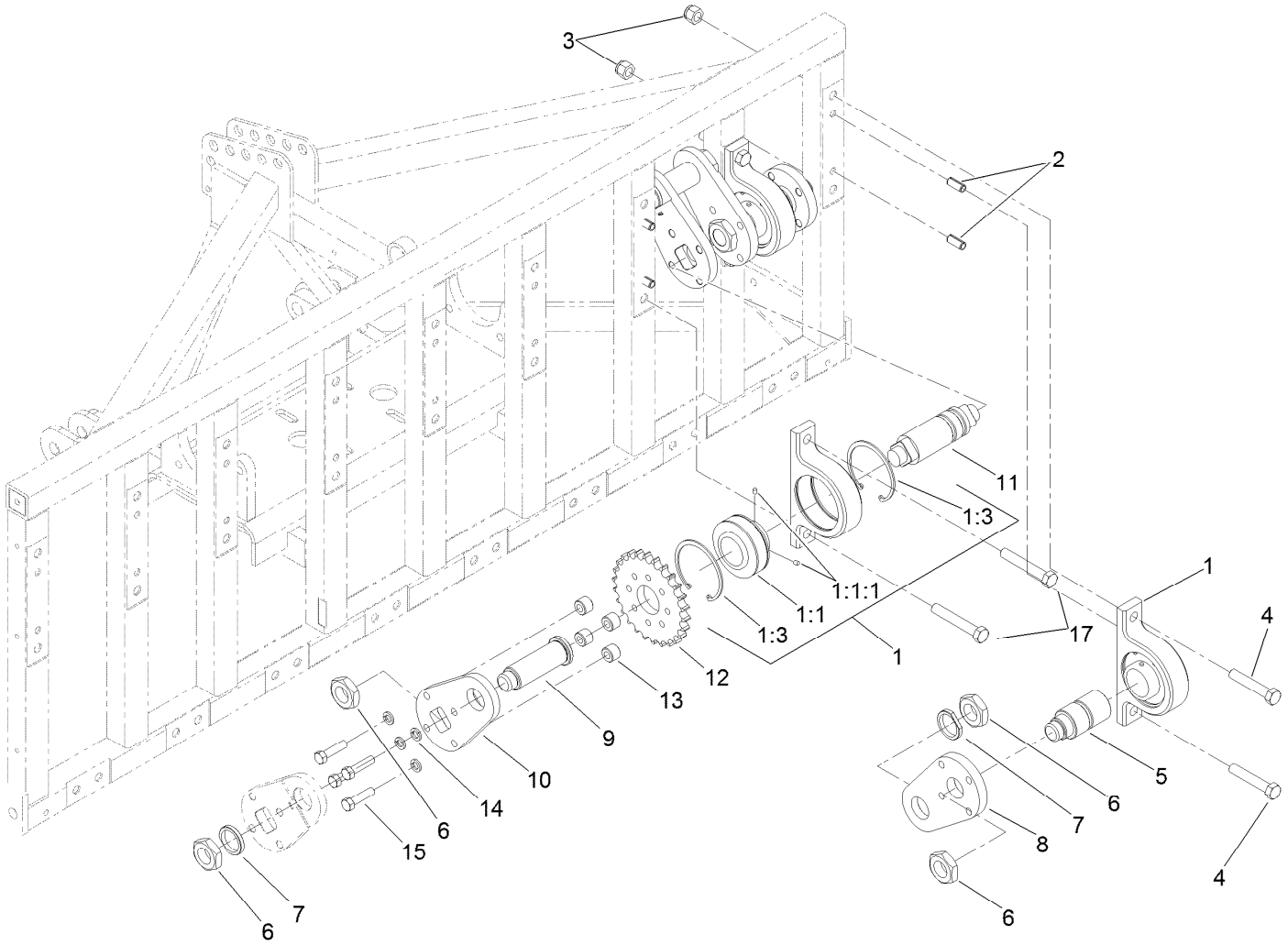


# Center to Right Crankshaft Assembly

| Ref. | Part Number | Qty. | Description |
|---|---|---|---|
| 1 | 121-6905 | 3 | Main Bearing Housing ASM |
| 1:1 | | 1 | Bearing-Ball ● |
| 1:1:1 | 99-0195 | 2 | Screw-Set, HSH |
| 1:3 | SG427540 | 2 | Ring-Retaining |
| 2 | 105-1041 | 6 | Pin-Spring |
| 3 | 3296-53 | 6 | Nut-Lock, NI |
| 4 | 327-14 | 4 | Screw-HH |
| 5 | SG217557 | 1 | Shaft-Stub, Outside |
| 6 | SG267200 | 8 | Nut-Hex |
| 7 | SG247540 | 3 | Washer-Clipped |

| Ref. | Part Number | Qty. | Description |
|---|---|---|---|
| 8 | SG207054 | 1 | Arm-Crank |
| 9 | SG257054 | 3 | Pin-Crank |
| 10 | SG217054 | 4 | Arm-Crank |
| 11 | SG217354 | 2 | Crankshaft |
| 12 | SG217026 | 1 | Sprocket-Crank |
| 13 | SG267500 | 4 | Spacer |
| 14 | 3253-7 | 4 | Washer-Lock |
| 15 | SG271517 | 4 | Screw-HH |
| 17 | 327-16 | 2 | Screw-HH |

● Not serviced separately

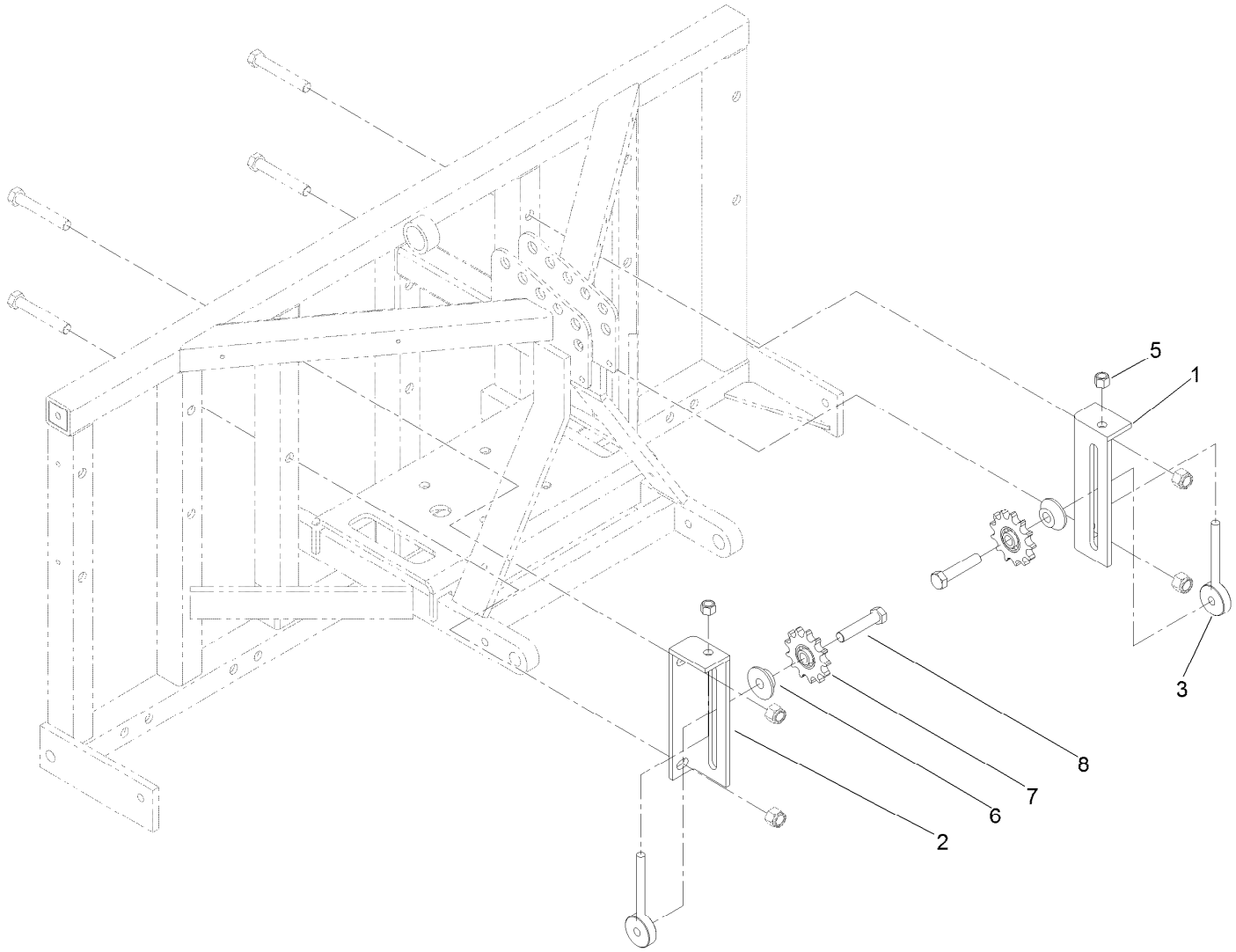


# Idler Assembly

| Ref. | Part Number | Qty. | Description |
|---|---|---|---|
| 1 | SG587054-03 | 1 | Bracket-Idler |
| 2 | SG597054-03 | 1 | Bracket-Idler |
| 3 | SG587202 | 2 | Rod-Idler |
| 5 | 3296-23 | 2 | Nut-Lock, NI |
| 6 | SG537500 | 2 | Spacer-Offset |
| 7 | SG517054 | 2 | Sprocket-Idler |
| 8 | 327-9 | 2 | Screw-HH |

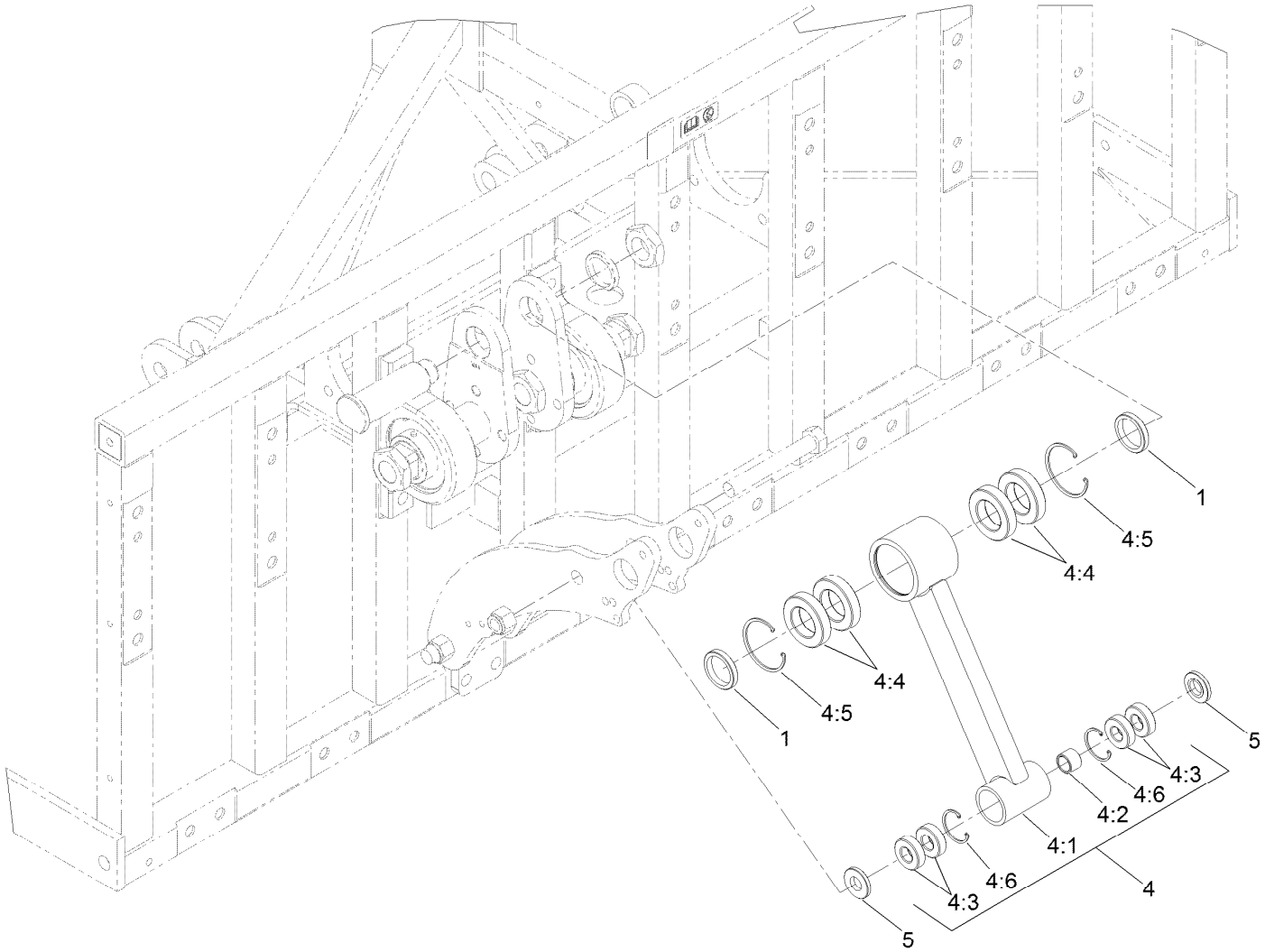


# Connecting Rod Assembly

| *Ref.* | *Part Number* | *Qty.* | *Description* |
|---|---|---|---|
| 1 | SG337100 | 16 | Bushing-Outer |
| 4 | SG135154 | 8 | Connecting Rod ASM |
| 4:1 | | 1 | Rod-Connecting ● |
| 4:2 | SG337010 | 1 | Bushing-Inner |
| 4:3 | SG337075 | 4 | Bearing-Ball |
| 4:4 | SG337590 | 4 | Bearing-Ball |
| 4:5 | SG427541 | 2 | Ring-Retaining, Internal |
| 4:6 | SG427625 | 2 | Ring-Retaining, Internal |
| 5 | SG337050 | 16 | Bushing-Outer |

● Not serviced separately

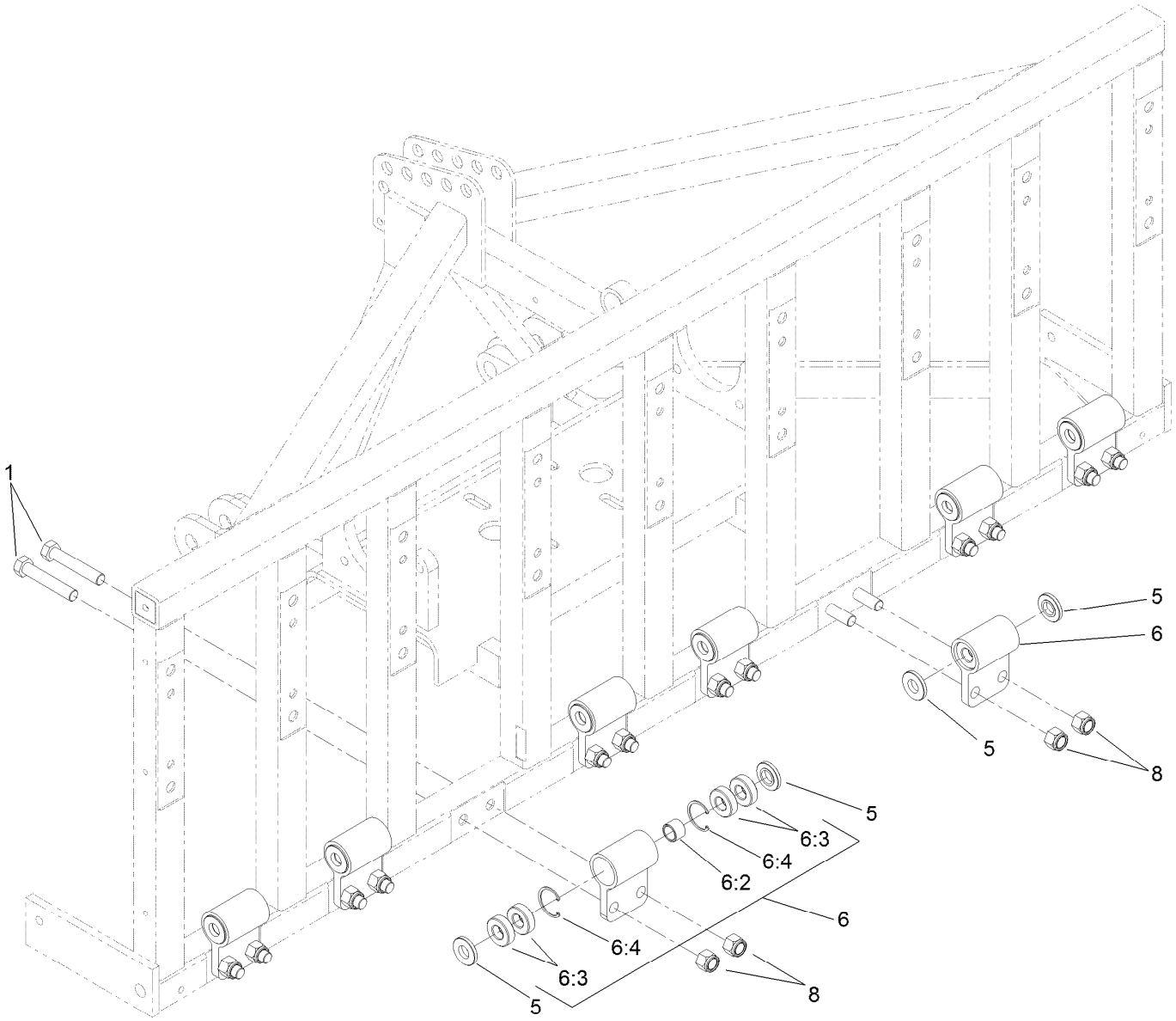


# Hinge Assembly

| Ref. | Part Number | Qty. | Description |
|---|---|---|---|
| 1 | 327-14 | 16 | Screw-HH |
| 5 | SG337050 | 16 | Bushing-Outer |
| 6 | 125-3312 | 8 | Hinge ASM |
| 6:2 | SG337010 | 1 | Bushing-Inner |
| 6:3 | SG337075 | 4 | Bearing-Ball |
| 6:4 | SG427625 | 2 | Ring-Retaining, Internal |
| 8 | 3296-53 | 16 | Nut-Lock, NI |

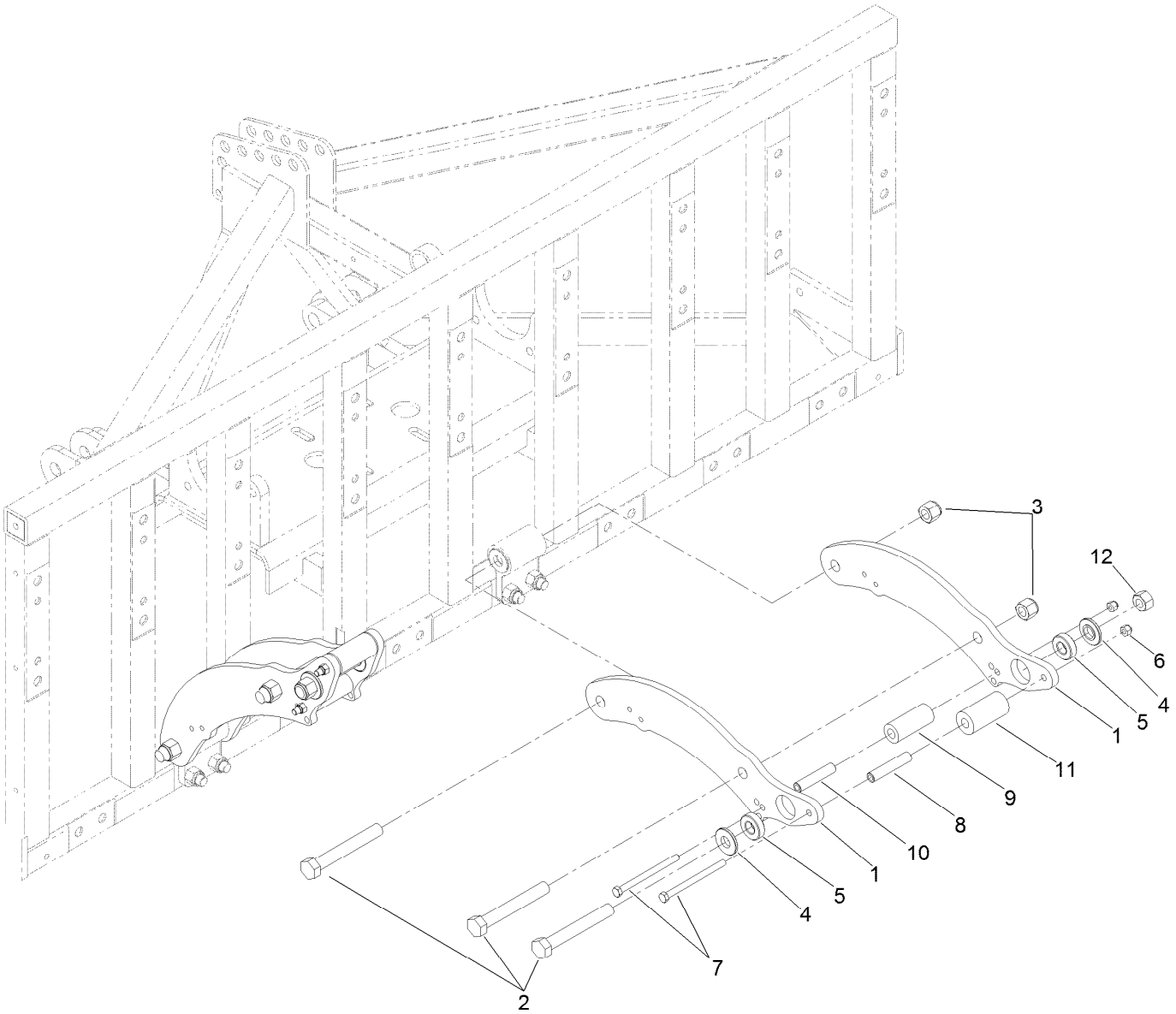


# Linkage Arm Assembly

| Ref. | Part Number | Qty. | Description |
|---|---|---|---|
| 1 | SG387055-03 | 16 | Arm-Linkage, Arched |
| 2 | 328-12 | 24 | Screw-HH |
| 3 | 3296-51 | 16 | Nut-Lock, NI |
| 4 | SG437125 | 16 | Bushing-Outer |
| 5 | SG337075 | 16 | Bearing-Ball |
| 6 | 3296-39 | 16 | Nut-Lock, NI |
| 7 | 323-21 | 16 | Screw-HH |
| 8 | SG337300 | 8 | Spacer-Linkage |
| 9 | SG487125 | 8 | Bumper-Rubber |
| 10 | SG486312 | 8 | Spacer-Arm, Linkage |
| 11 | SG487126 | 8 | Bumper-Rubber |
| 12 | 120-7252 | 8 | Nut-Lock |

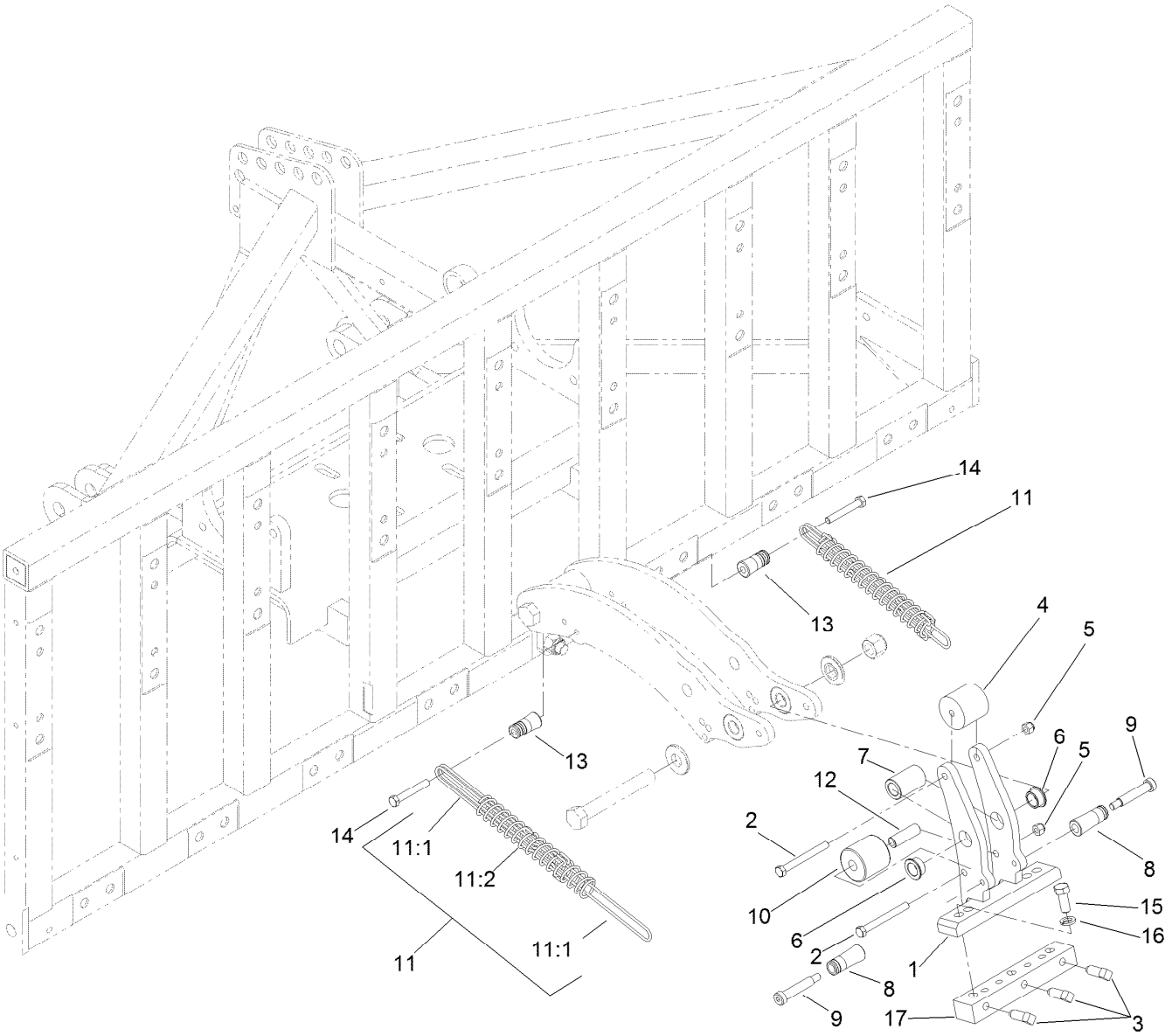


# Head and Spring Assembly

| Ref. | Part Number | Qty. | Description |
|---|---|---|---|
| 1 | SG404070-03 | 8 | Head-Tine |
| 2 | 323-15 | 16 | Screw-HH |
| 3 | SG477125 | 40 | Screw-Set, SQH |
| 4 | SG487200 | 8 | Bumper-Head |
| 5 | 3296-39 | 16 | Nut-Lock, NI |
| 6 | SG447080 | 16 | Bushing-Flanged |
| 7 | SG437100-03 | 8 | Spacer-Head |
| 8 | SG449127-03 | 16 | Post-Spring |
| 9 | SG449129 | 16 | Bolt-Shoulder |
| 10 | SG487201 | 8 | Spacer-Plastic |

| Ref. | Part Number | Qty. | Description |
|---|---|---|---|
| 11 | SG148154 | 16 | Spring ASM |
| 11:1 | SG487256 | 3 | Wire-Draw, Spring |
| 11:2 | SG487257 | 1 | Spring-Compression |
| 12 | SG486311 | 8 | Tube-Metal, Head Bumper |
| 13 | SG449126-03 | 16 | Post-Spring |
| 14 | 323-12 | 16 | Screw-HH |
| 15 | 325-6 | 16 | Screw-HH |
| 16 | 3253-7 | 16 | Washer-Lock |
| 17 | SGH08704-03 | 8 | Head-Tine, Adapter |

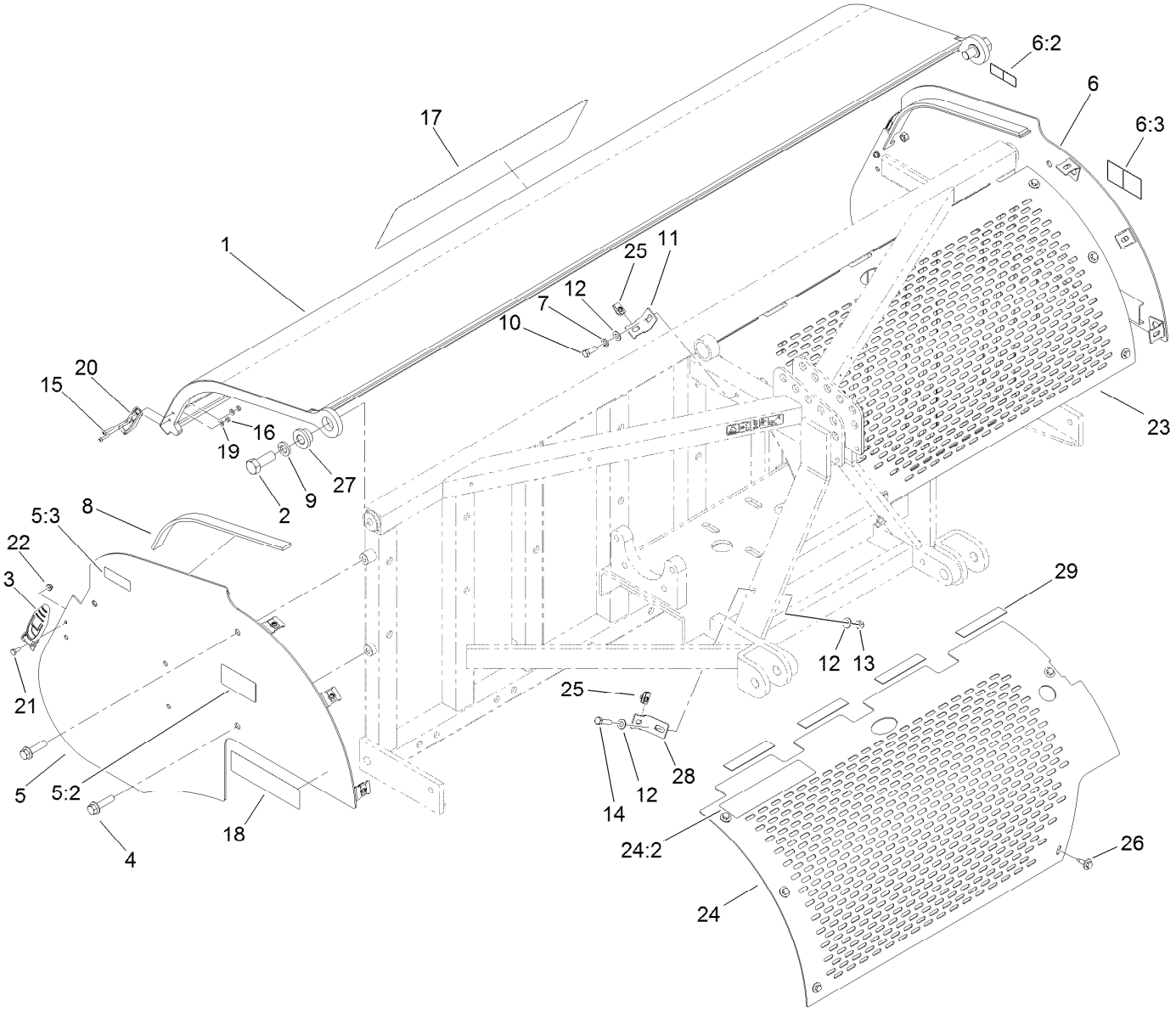


# Screen and Hood Assembly

| Ref. | Part Number | Qty. | Description |
|---|---|---|---|
| 1 | 120-7329-03 | 1 | Hood ASM |
| 2 | 328-24 | 2 | Screw-HH |
| 3 | 103-2898 | 2 | Latch-Rubber |
| 4 | 3234-27 | 4 | Screw-HHF |
| 5 | 120-7256 | 1 | RH Shield ASM |
| 5:2 | 117-7051 | 1 | Decal-Danger, Keep Away CE |
| 5:3 | 120-0625 | 1 | Decal-Warning |
| 6 | 120-7257 | 1 | LH Shield ASM |
| 6:2 | 117-7051 | 1 | Decal-Danger, Keep Away CE |
| 6:3 | 120-0625 | 1 | Decal-Warning |
| 7 | 3253-21 | 2 | Washer-Lock |
| 8 | 120-7273 | 2 | Strip-Rubber |
| 9 | 3253-9 | 2 | Washer-Lock |
| 10 | 323-6 | 2 | Screw-HH |
| 11 | 120-1011-03 | 2 | Bracket-Shield |
| 12 | 3256-24 | 6 | Washer-Flat |
| 13 | 3296-39 | 2 | Nut-Lock, NI |
| 14 | 323-8 | 2 | Screw-HH |
| 15 | 108-3153 | 4 | Screw-HSBH |
| 16 | 3296-2 | 4 | Nut-Lock, NI |
| 17 | 117-7057 | 1 | Decal |
| 18 | 117-7086 | 2 | Decal |
| 19 | 3256-14 | 4 | Washer-Flat |
| 20 | 103-2897 | 2 | Latch-Catch |
| 21 | 321-3 | 2 | Screw-HH |
| 22 | 104-7201 | 2 | Nut-HF |
| 23 | 120-7326 | 1 | Screen-Front, Left |
| 24 | 120-7328 | 1 | Front Right Guard ASM |
| 24:2 | 117-7050 | 1 | Decal-Warning, CE |
| 25 | 94-2413 | 10 | Nut-U |
| 26 | 114-8418 | 10 | Screw-HWH, Sems |
| 27 | 120-1021 | 2 | Bushing-Hood |
| 28 | 120-7323 | 2 | Bracket-Shield |
| 29 | 120-1087 | 8 | Strip-Rubber |

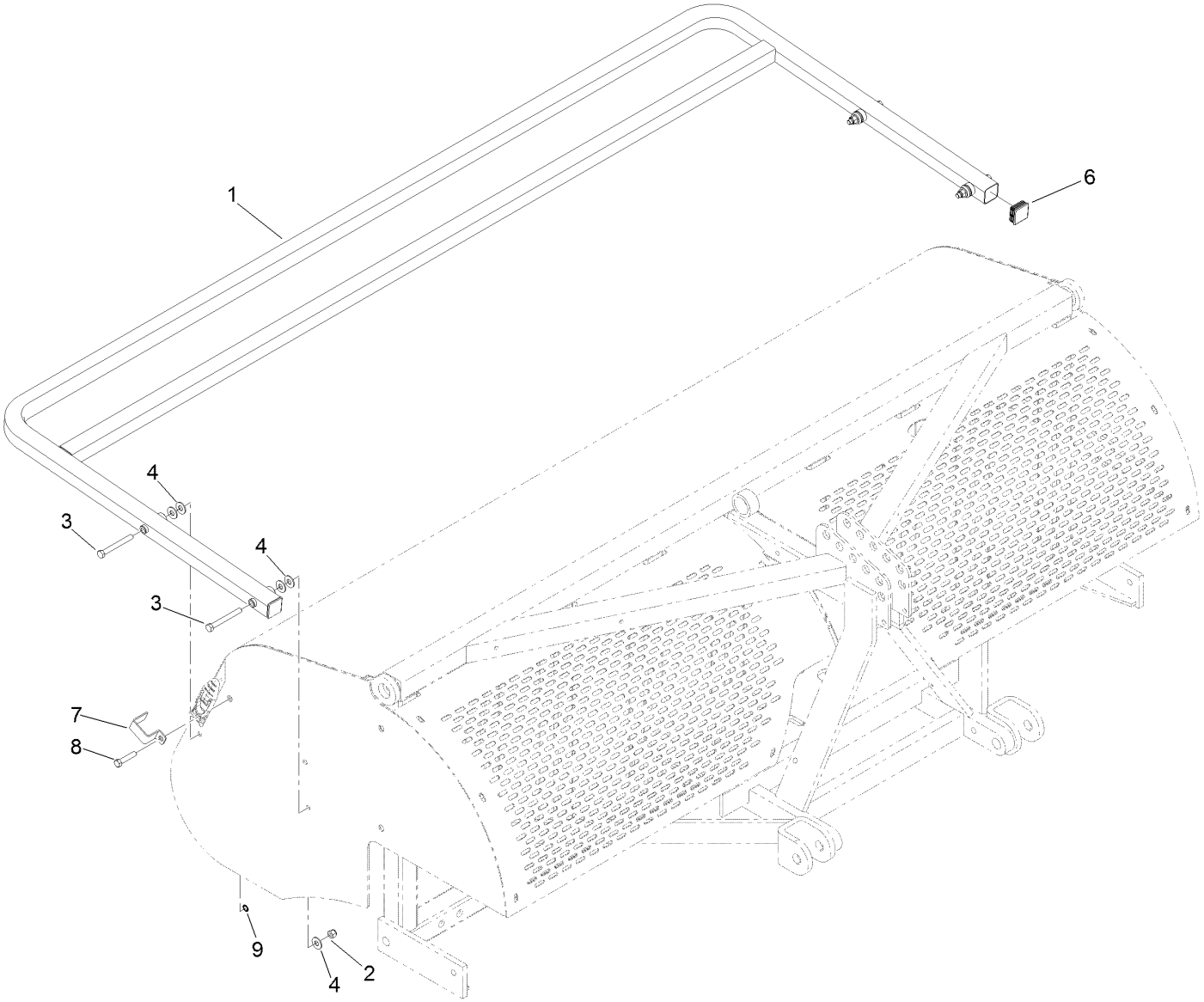


# Rear Guard Assembly

| *Ref.* | *Part Number* | *Qty.* | *Description* |
|---|---|---|---|
| 1 | 120-7322-03 | 1 | Rear Guard ASM |
| 2 | 3296-39 | 4 | Nut-Lock, NI |
| 3 | 323-20 | 4 | Screw-HH |
| 4 | 80-6990 | 12 | Washer-Hardened |
| 6 | 120-7261 | 2 | Cap-End, Square |
| 7 | 110-4673 | 2 | Lock-Latch, CE |
| 8 | 323-53 | 2 | Screw-HH |
| 9 | 32151-72 | 2 | Ring-Retaining |

# Attachments and Accessories

## For 09934 ProCore SR70-S Aerator

| Product Name | Model/Part |
|---|---|
| Rear Roller Kit | 09953 |
| 2x18mm Tine Head Adapter Kit | 117-7194 |
| 2x12mm or 2x5/16-inch Tine Head Adapter Kit | 117-7195 |
| 4x3/8-inch or 4x5/16-inch Tine Head Adapter Kit | 117-7196 |
| 8x3/8-inch Tine Head Adapter Kit | 117-7199 |

**Notes:**

TORO®

Count on it.