Form No. 3425-521 Rev A

TORO®

Count on it.

Parts Catalog

ProCore® SR70-S

Aerator

Model No. 09934—Serial No. 318000113 and Up

Register at www.Toro.com.
Original Instructions (EN)

CE

3425-521 A

Ordering Replacement Parts

To order replacement parts, please supply the part number, the quantity, and the description of each part desired.

Understanding Reference Numbers

Each identified part in an illustration has a reference number. The reference number for a part also appears in the parts list, along with other information about the part.

This catalog uses two special reference number formats, one to indicate parts in a service assembly and another to indicate the quantity of a given part in an illustration.

Service Assembly Reference Numbers

Parts in service assemblies have reference numbers in the form a:b. The a represents the reference number of the entire service assembly and the b represents a sequential number unique to each part within the service assembly.

For example, a wheel assembly might be identified by reference number 6, the tire by 6:1, the valve by 6:2, and the wheel by 6:3. When you order the assembly identified by reference number 6, you receive all parts identified by reference numbers 6:1,6:2, and 6:3. However, you may also order any part individually. Reference numbers of this type appear in illustration and in parts lists.

Reference Numbers Indicating Quantity

In an illustration, if a reference number indicates more than one part, the reference number has the form nX y. The n represents the quantity of the part, the X is the multiplication symbol, and the y represents the reference number.

For example, in an illustration, the reference number 2X 37 means that two of the parts identified by reference number 37 are indicated.

Contents

Drive Assembly 4
Gearbox Assembly No. SG504000-03 5
PTO Shaft Assembly No. 137-7323 6
Frame and Roller Assembly 7
Left to Right Crankshaft Assembly 8
Center Crankshaft Assembly 9
Center to Right Crankshaft Assembly 10
Idler Assembly 11
Connecting Rod Assembly 12
Hinge Assembly 13
Linkage Arm Assembly 14
Head and Spring Assembly 15
Screen and Hood Assembly 16
Rear Guard Assembly 17
Attachments and Accessories 18

© 2019—The Toro® Company
8111 Lyndale Avenue South
Bloomington, MN 55420

Contact us at www.Toro.com.
Printed in the USA.
All Rights Reserved

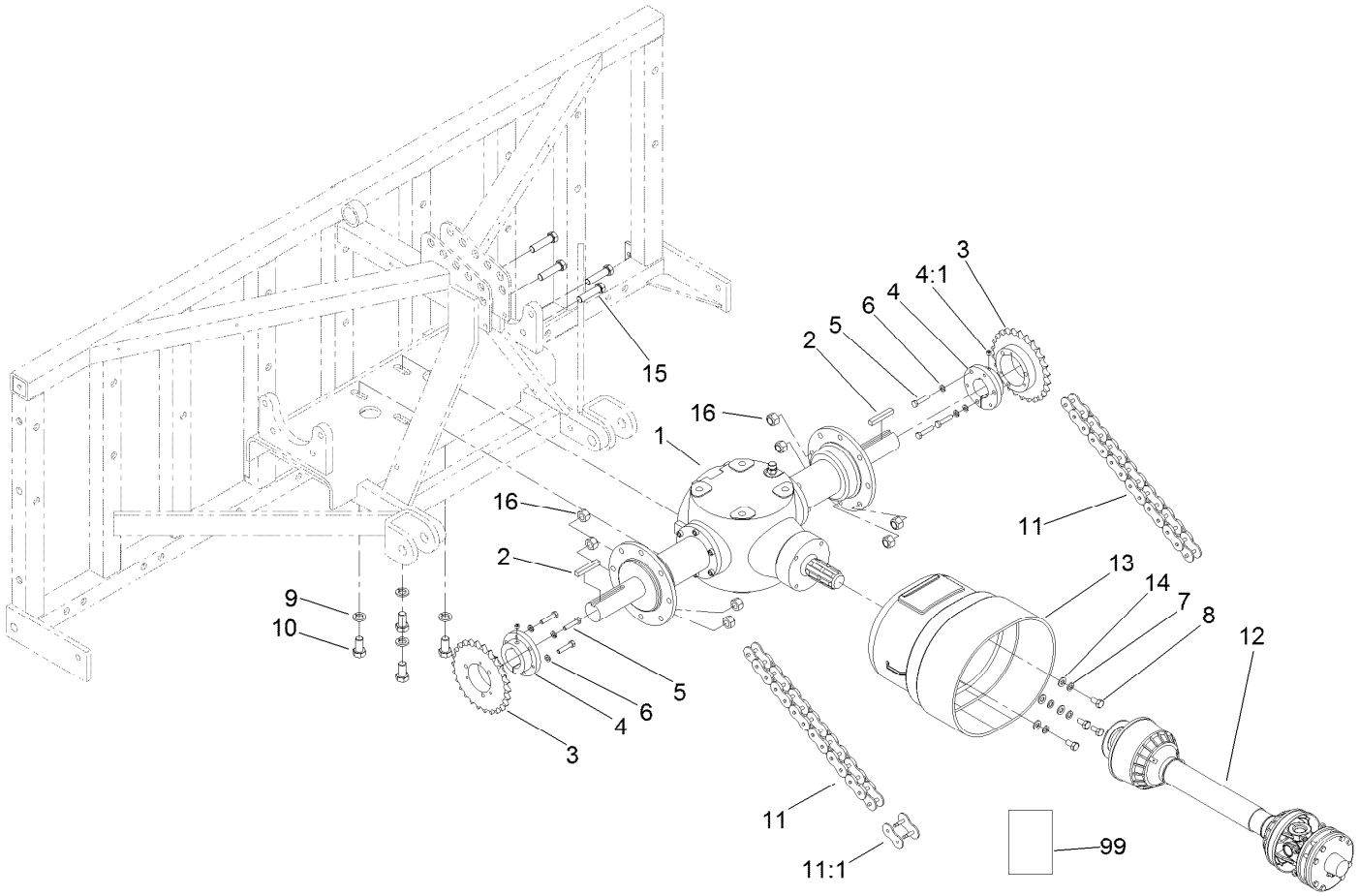

Drive Assembly

Ref.	Part Number	Qty.	Description
1	SG504000-03	1	Gearbox ASM
2	80-6140	2	Key-Square
3	SG517026	2	Gearbox-Sprocket
4	SG527054	2	Sprocket-Hub
4:1	3246-4	1	Screw-Set
5	5-1470	6	Screw-HH
6	3253-4	6	Washer-Lock
7	48-9590	4	Washer-Lock
8	33115-020	4	Screw-HH
9	3253-8	4	Washer-Lock

Ref.	Part Number	Qty.	Description
10	33118-030	4	Screw-HH
11	SG580154	2	Chain-O-Ring
11:1	SG581083	1	Link-Master
12	137-7323	1	PTO Shaft ASM
13	SG4170401	1	Cone-Shaft
14	3256-24	4	Washer-Flat
15	SG562562	8	Screw-HH
16	99-4371	8	Nut-Lock
99	138-9038	1	Decal-Danger, Entanglement

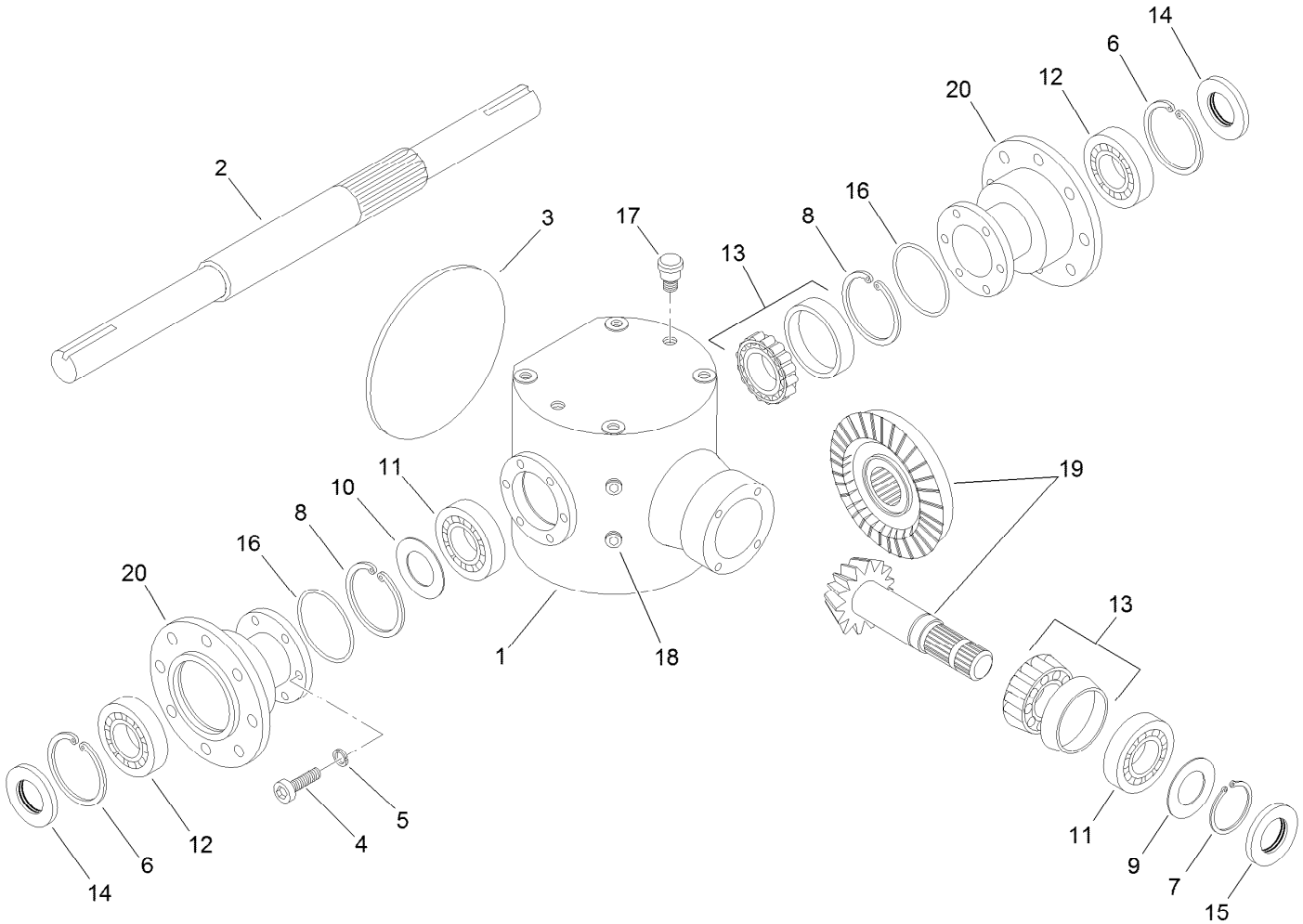

Gearbox Assembly No. SG504000-03

Ref.	Part Number	Qty.	Description
1		1	Housing-Gearbox ●
2	119-3221	1	Shaft-Gearbox, Output
3	119-3222	1	Cover-Housing, Gearbox
4	119-3244	12	Screw-HSH
5	119-3249	12	Washer-Disc, Spring
6	119-3223	2	Circlip-Internal
7	119-3224	1	Circlip-External
8	119-3225	2	Circlip-External
9	119-3226	1	Shim Kit
10	119-3227	1	Shim Kit

Ref.	Part Number	Qty.	Description
11	119-3228	2	Bearing-Ball
12	119-3229	2	Bearing-Ball
13	119-3230	2	Bearing-Roller Gearbox
14	119-3245	2	Seal-Oil
15	119-3231	1	Seal-Oil
16	119-3246	2	Seal-Oil
17	119-3218	1	Plug-Breather
18	119-3219	3	Plug-HSH
19	119-3232	1	Gear-Bevel, Gearbox
20	119-3247	2	Housing-Gearbox

● Not serviced separately

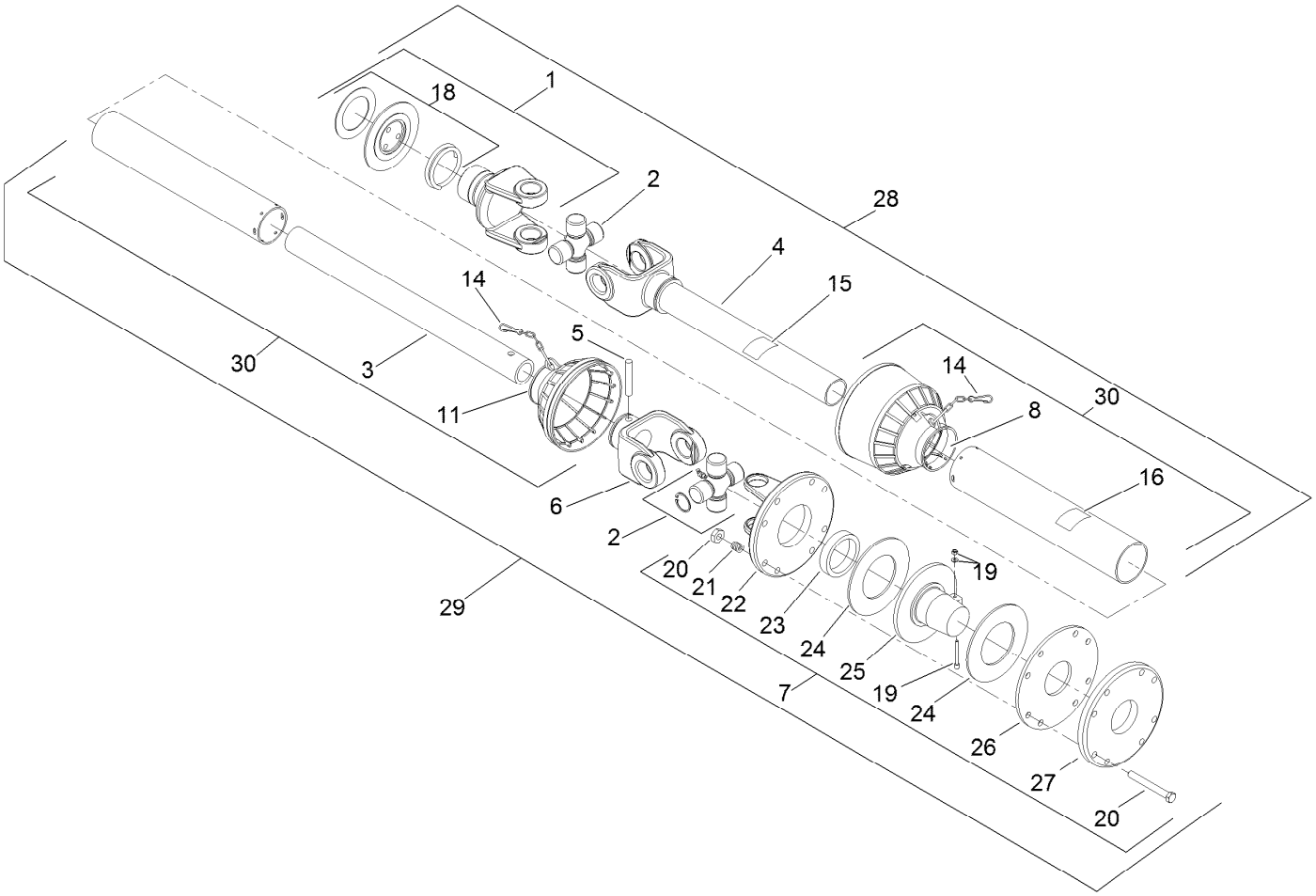

PTO Shaft Assembly No. 137-7323

Ref.	Part Number	Qty.	Description
1	01-282-2240	1	Yoke-Rs
2	136-3942	2	Cross And Bearing Kit
3		1	Tube-Inner ■
4	136-3943	1	Yoke And Tube ASM
5	119-3134	1	Pin-Roll
6	01-282-2100	1	Yoke-Tube, Inner
7	119-3136	1	Clutch ASM
8	136-3944	1	Bearing-Shield, Outer
11		1	Bearing-Shield, Inner ■
14	119-3113	2	Chain-Safety
15	119-3114	1	Decal-Danger
16	119-3115	1	Decal-Danger
17	136-3937	1	Booklet-Instruction, Usa ●
18	119-3117	1	Ball And Collar Kit
19	136-3947	1	Pin-Taper
20	119-3119	8	Bolt And Nut ASM
21	119-3143	8	Spring
22		1	Yoke-Flange ■
23		1	Bushing ■
24	119-3145	2	Lining-Clutch, PTO
25		1	Hub ■
26	119-3147	1	Plate-Pressure
27	119-3148	1	Plate-Outer
28	136-3946	1	Half Shaft ASM
29	136-3948	1	Half Shaft ASM
30	136-3949	1	Complete Shield ASM
31	136-3935	6	Screw-Self TAP ●

● Not illustrated

■ Not serviced separately

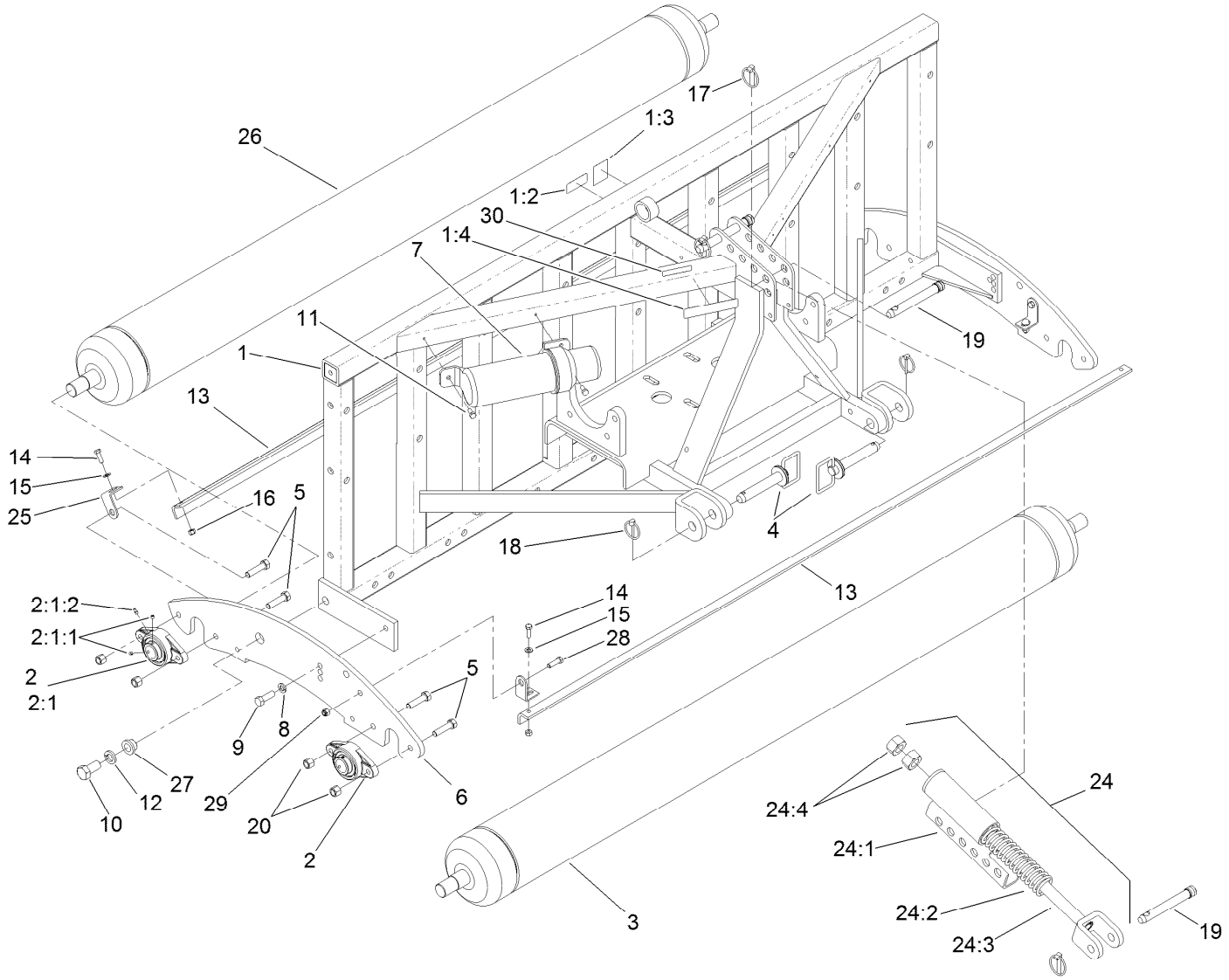

Frame and Roller Assembly

Ref.	Part Number	Qty.	Description
1	120-1071	1	Frame ASM
1:2	117-7052	1	Decal-No Oil
1:3	100-3612	1	Decal-Warning
1:4	127-4235	1	Decal-Warning, PTO
2	SG637070-03	4	Bearing-Roller
2:1		1	Bearing-Flange ●
2:1:1	3245-35	2	Screw-Set, HSH
2:1:2	302-19	1	Fitting-Grease
3	SG627070-03	1	Roller-Main, Large
4	112-4378	2	Pin-Hitch
5	SG271517	8	Screw-HH
6	SG639070-01	2	Boot-Roller, Double
7	SG999018	1	Canister-Manual, Operators
8	3253-7	2	Washer-Lock
9	325-6	2	Screw-HH
10	328-24	2	Screw-HH
11	322-3	2	Screw-HH
12	3253-9	2	Washer-Lock
13	SG678918-03	2	Scraper Bar

Ref.	Part Number	Qty.	Description
14	322-5	4	Screw-HH
15	3256-23	4	Washer-Plain
16	3296-29	4	Nut-Lock, NI
17	100-5389	3	Pin-Lynch
18	92-1298	2	Pin-Lynch
19	SG715450	3	Pin-Link, Top
20	3296-23	8	Nut-Lock, NI
24	SG115070	1	Top Link Spring ASM
24:1	117-7137-03	1	Link-Adapter, Top
24:2	SG330080-03	1	Spring-Top Link
24:3	117-7136-03	1	Bracket-Spring Rod
24:4	SG330081	2	Nut-Hex
25	119-0955-03	4	Clip-Scraper
26	SG627071-03	1	Roller-Main, Small
27	SG639073	2	Bushing-Flange
28	323-7	2	Screw-HH
29	3296-39	2	Nut-Lock, NI
30	133-8061	1	Decal-Warning

● Not serviced separately

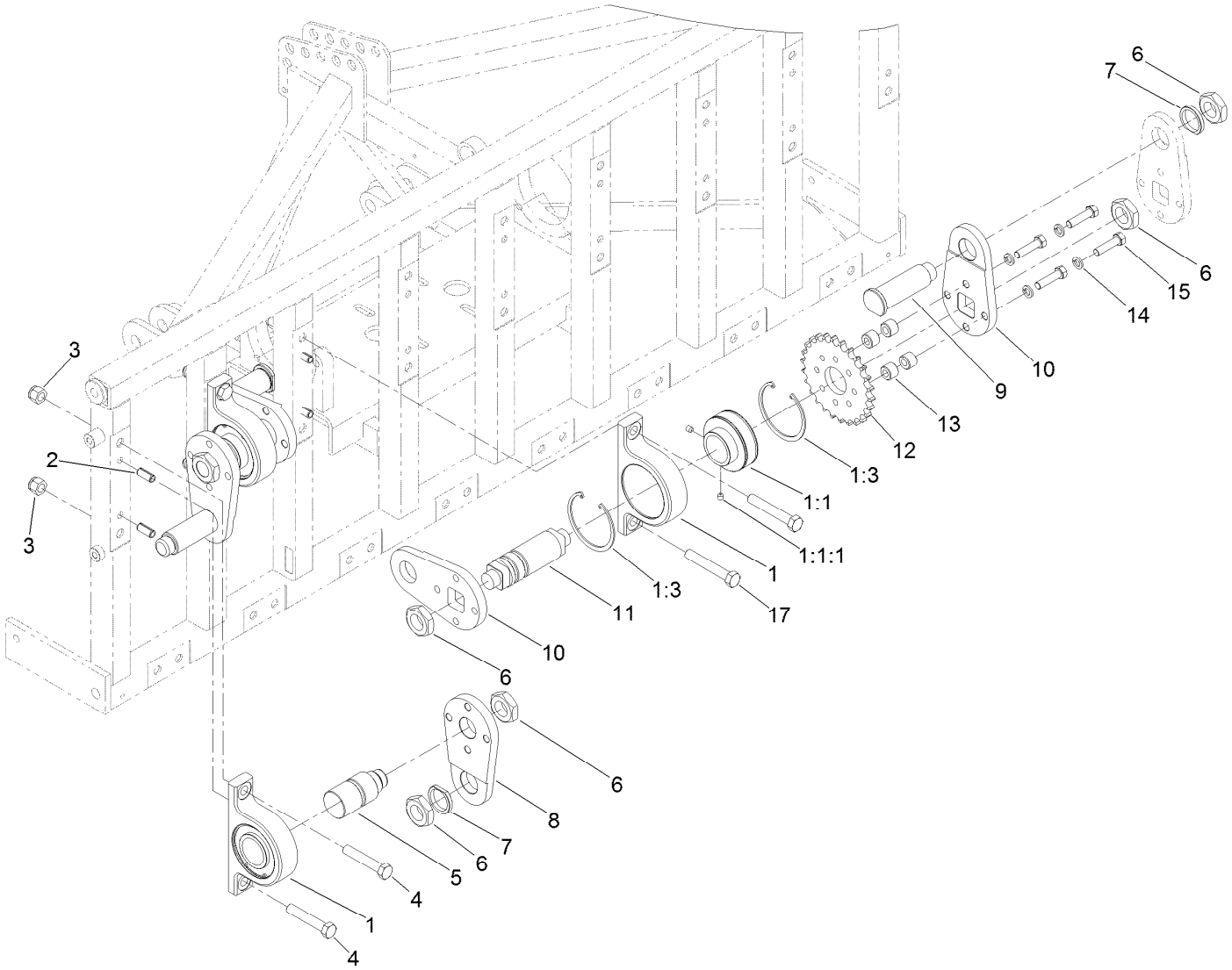

Left to Right Crankshaft Assembly

Ref.	Part Number	Qty.	Description
1	121-6905	3	Main Bearing Housing ASM
1:1		1	Bearing-Ball ●
1:1:1	99-0195	2	Screw-Set, HSH
1:3	SG427540	2	Ring-Retaining
2	105-1041	6	Pin-Spring
3	3296-53	6	Nut-Lock, NI
4	327-14	4	Screw-HH
5	SG217557	1	Shaft-Stub, Outside
6	SG267200	8	Nut-Hex
7	SG247540	3	Washer-Clipped

Ref.	Part Number	Qty.	Description
8	SG207054	1	Arm-Crank
9	SG257054	3	Pin-Crank
10	SG217054	4	Arm-Crank
11	SG217354	2	Crankshaft
12	SG217026	1	Sprocket-Crank
13	SG267500	4	Spacer
14	3253-7	4	Washer-Lock
15	SG271517	4	Screw-HH
17	327-16	2	Screw-HH

● Not serviced separately

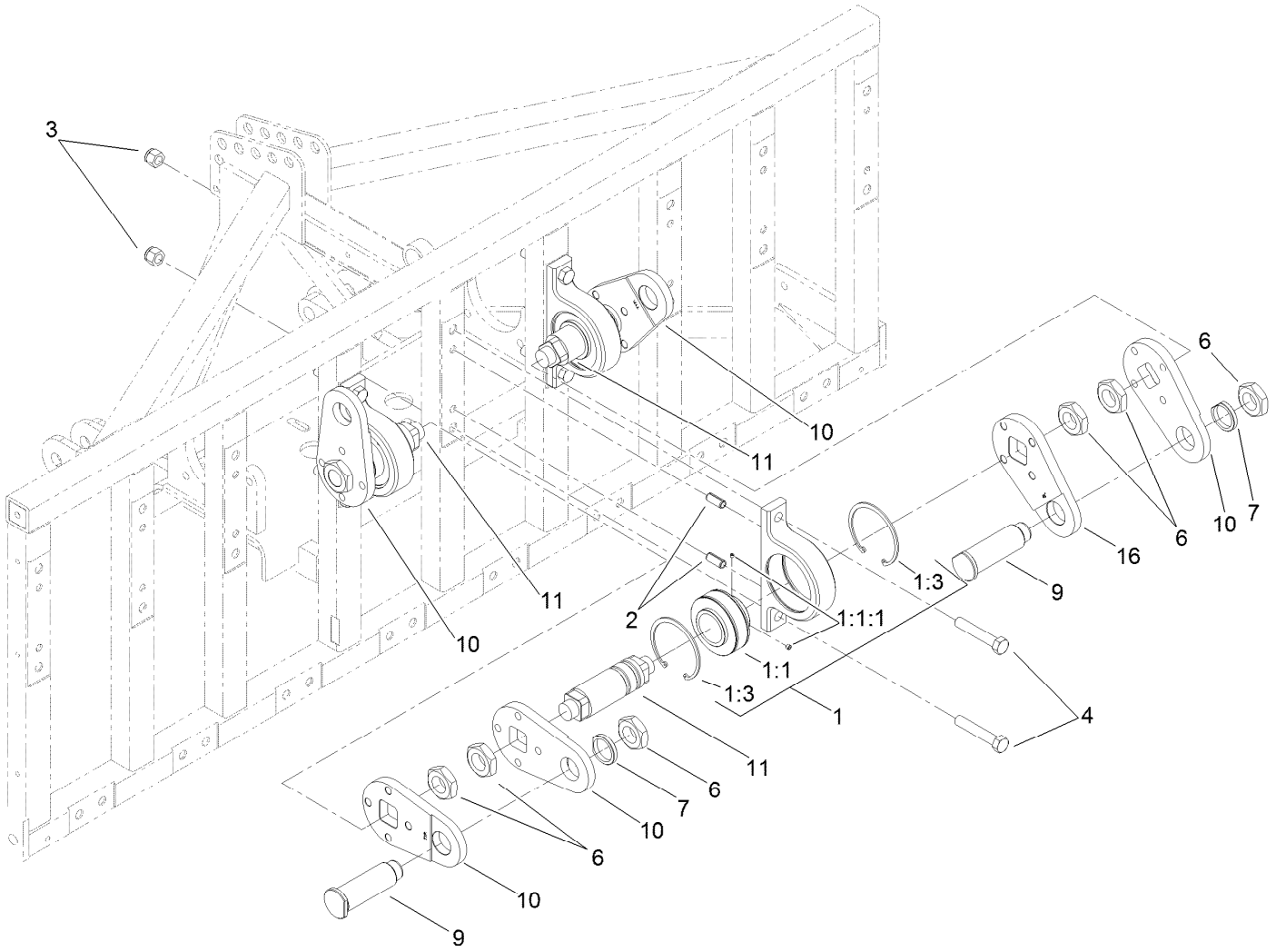

Center Crankshaft Assembly

Ref.	*Part Number*	*Qty.*	*Description*
1	121-6905	3	Main Bearing Housing ASM
1:1		1	Bearing-Ball ●
1:1:1	99-0195	2	Screw-Set, HSH
1:3	SG427540	2	Ring-Retaining
2	105-1041	6	Pin-Spring
3	3296-53	6	Nut-Lock, NI
4	327-14	6	Screw-HH
6	SG267200	8	Nut-Hex
7	SG247540	2	Washer-Clipped
9	SG257054	2	Pin-Crank
10	SG217054	5	Arm-Crank
11	SG217354	3	Crankshaft
16	SG217554	1	Arm-Crank, 45 DEG

● Not serviced separately

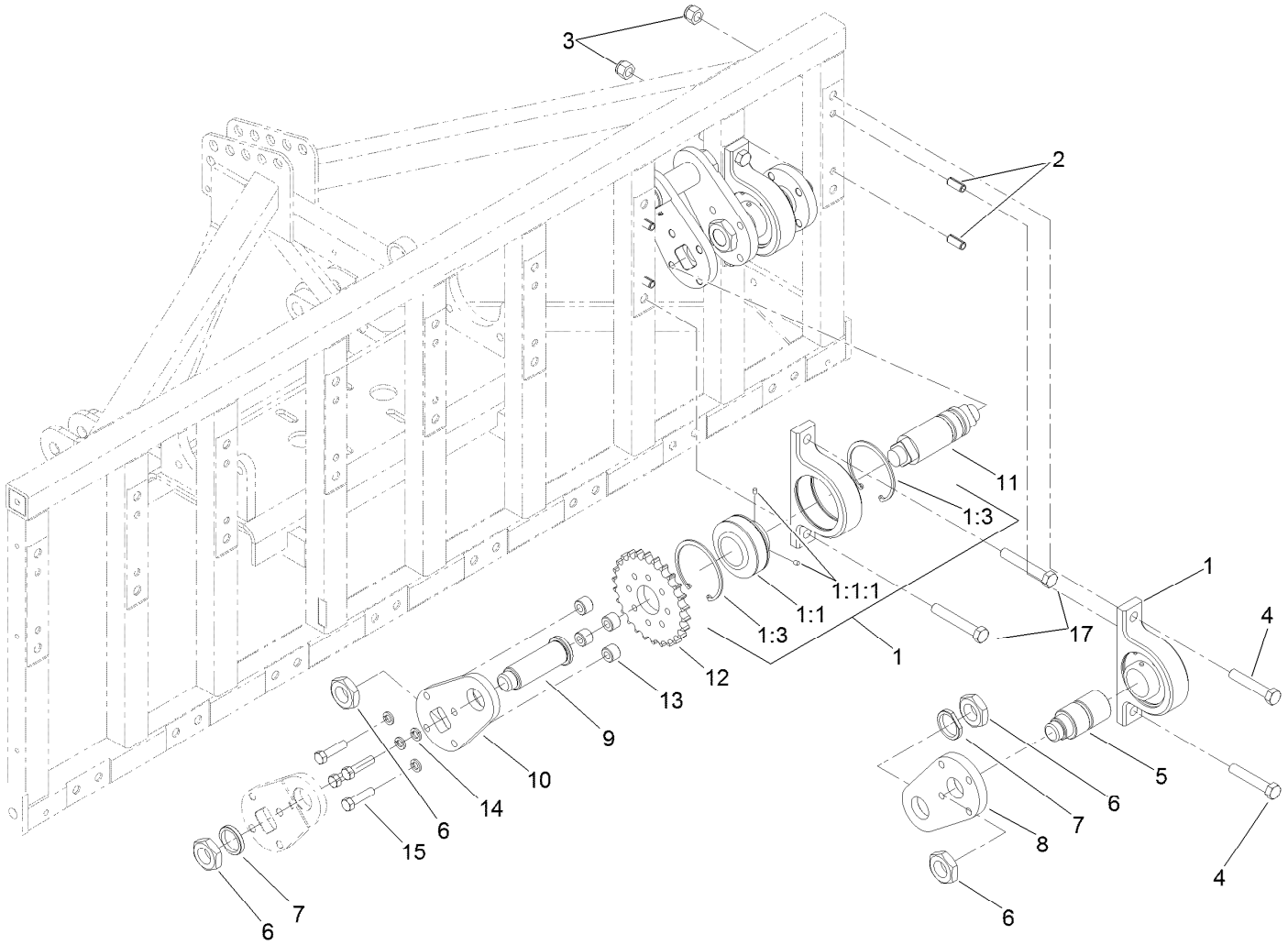

Center to Right Crankshaft Assembly

Ref.	Part Number	Qty.	Description
1	121-6905	3	Main Bearing Housing ASM
1:1		1	Bearing-Ball ●
1:1:1	99-0195	2	Screw-Set, HSH
1:3	SG427540	2	Ring-Retaining
2	105-1041	6	Pin-Spring
3	3296-53	6	Nut-Lock, NI
4	327-14	4	Screw-HH
5	SG217557	1	Shaft-Stub, Outside
6	SG267200	8	Nut-Hex
7	SG247540	3	Washer-Clipped

Ref.	Part Number	Qty.	Description
8	SG207054	1	Arm-Crank
9	SG257054	3	Pin-Crank
10	SG217054	4	Arm-Crank
11	SG217354	2	Crankshaft
12	SG217026	1	Sprocket-Crank
13	SG267500	4	Spacer
14	3253-7	4	Washer-Lock
15	SG271517	4	Screw-HH
17	327-16	2	Screw-HH

● Not serviced separately

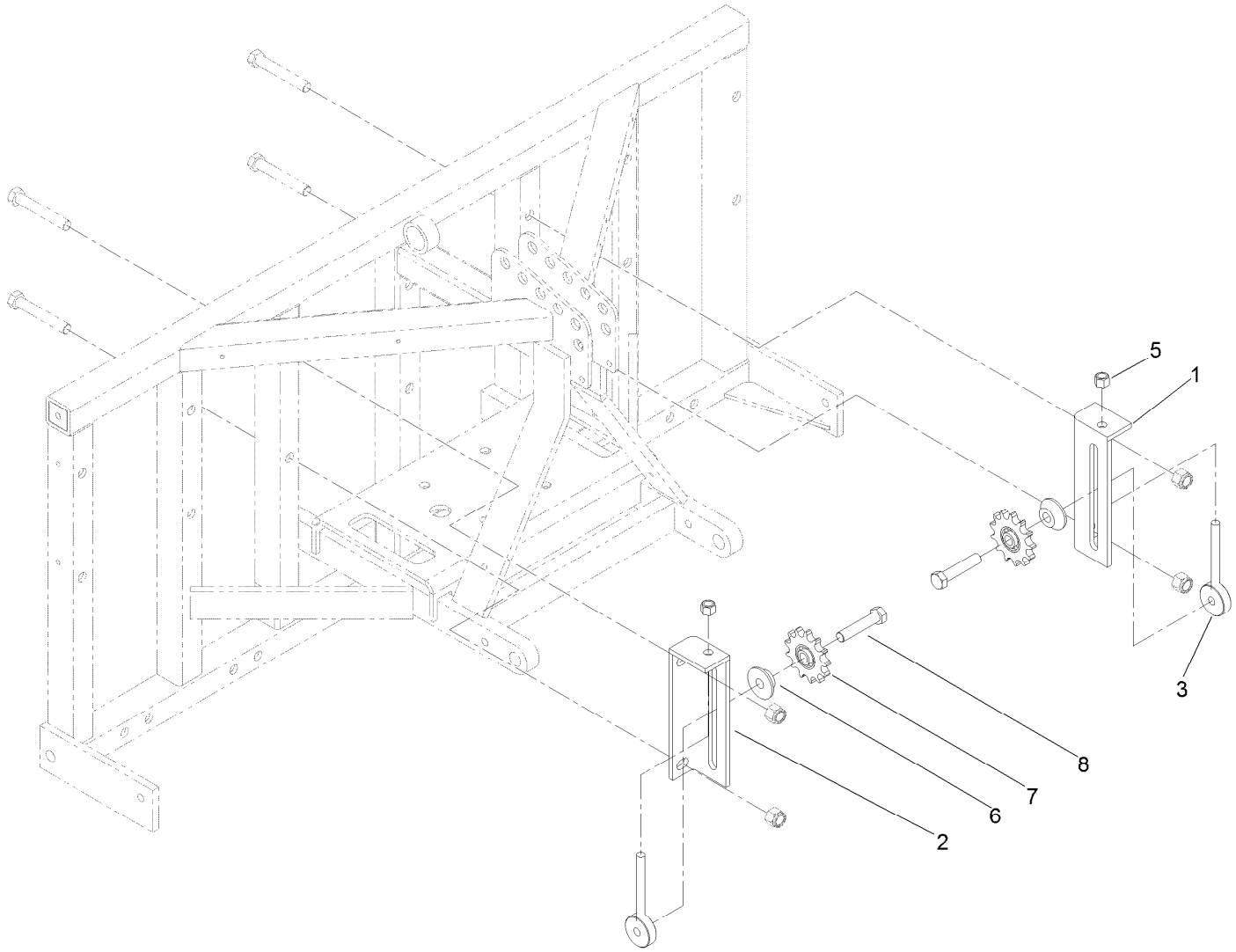

Idler Assembly

Ref.	Part Number	Qty.	Description
1	SG587054-03	1	Bracket-Idler
2	SG597054-03	1	Bracket-Idler
3	SG587202	2	Rod-Idler
5	3296-23	2	Nut-Lock, NI
6	SG537500	2	Spacer-Offset
7	SG517054	2	Sprocket-Idler
8	327-9	2	Screw-HH

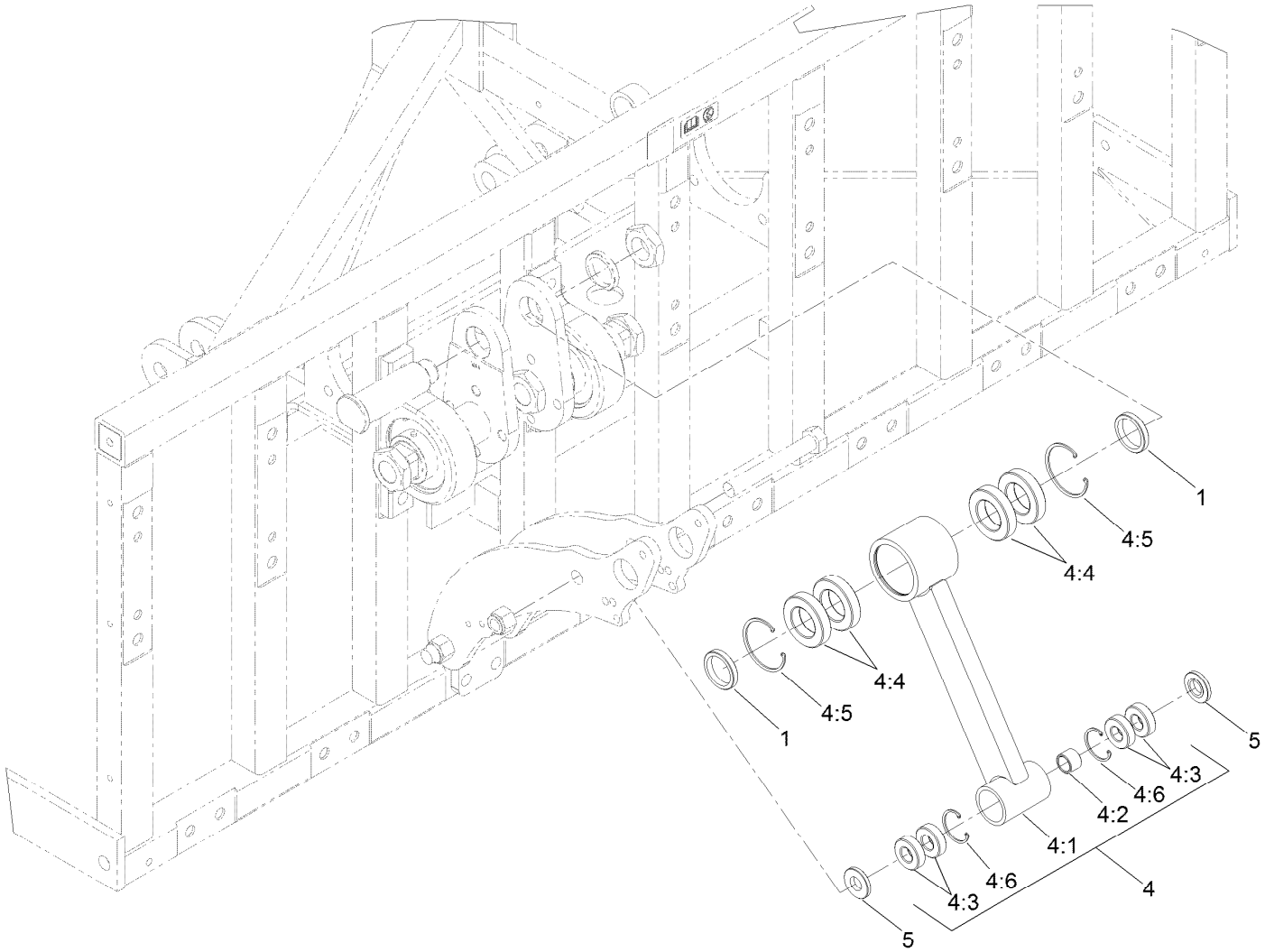

Connecting Rod Assembly

Ref.	*Part Number*	*Qty.*	*Description*
1	SG337100	16	Bushing-Outer
4	SG135154	8	Connecting Rod ASM
4:1		1	Rod-Connecting ●
4:2	SG337010	1	Bushing-Inner
4:3	SG337075	4	Bearing-Ball
4:4	SG337590	4	Bearing-Ball
4:5	SG427541	2	Ring-Retaining, Internal
4:6	SG427625	2	Ring-Retaining, Internal
5	SG337050	16	Bushing-Outer

● Not serviced separately

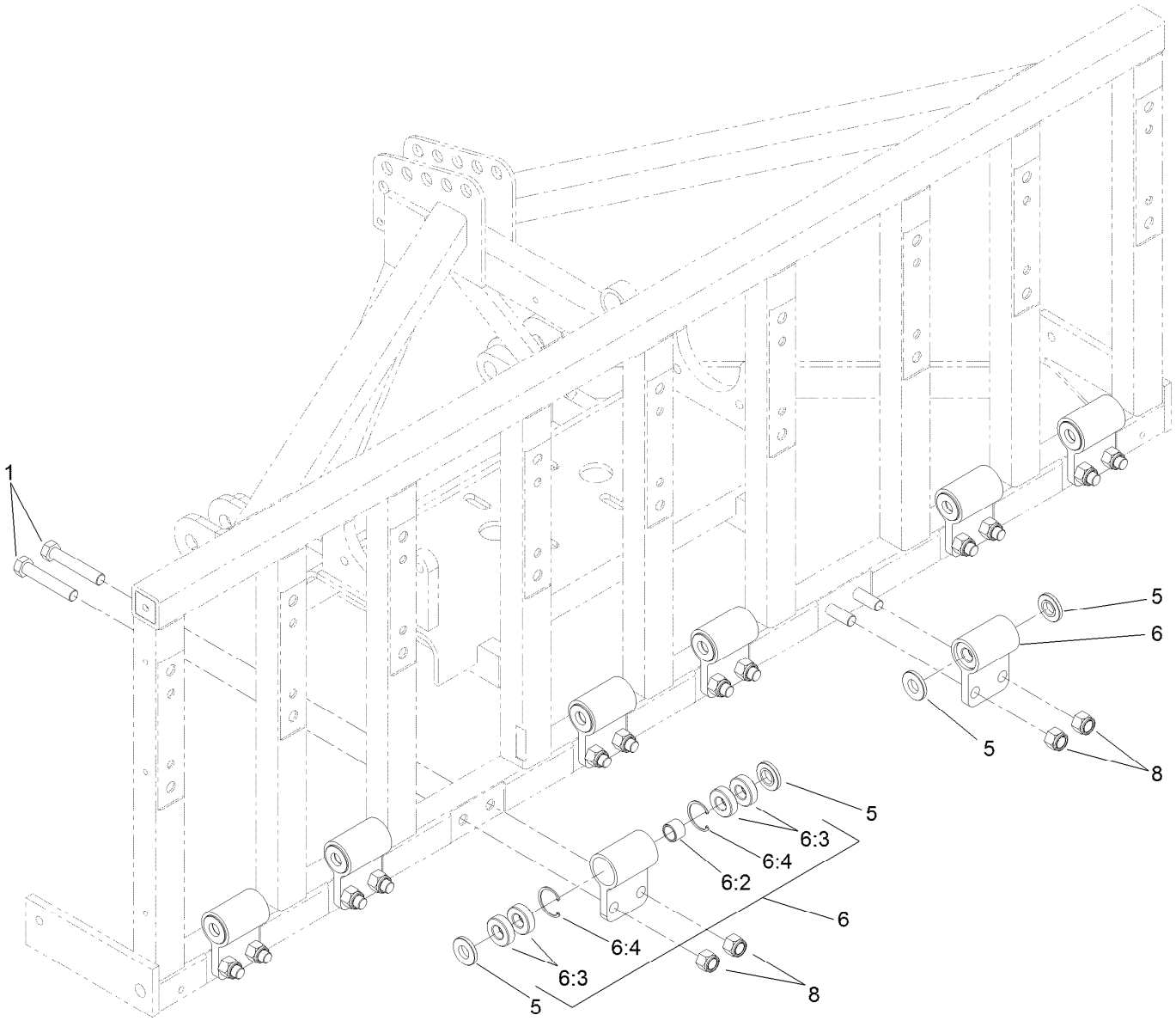

Hinge Assembly

Ref.	Part Number	Qty.	Description
1	327-14	16	Screw-HH
5	SG337050	16	Bushing-Outer
6	125-3312	8	Hinge ASM
6:2	SG337010	1	Bushing-Inner
6:3	SG337075	4	Bearing-Ball
6:4	SG427625	2	Ring-Retaining, Internal
8	3296-53	16	Nut-Lock, NI

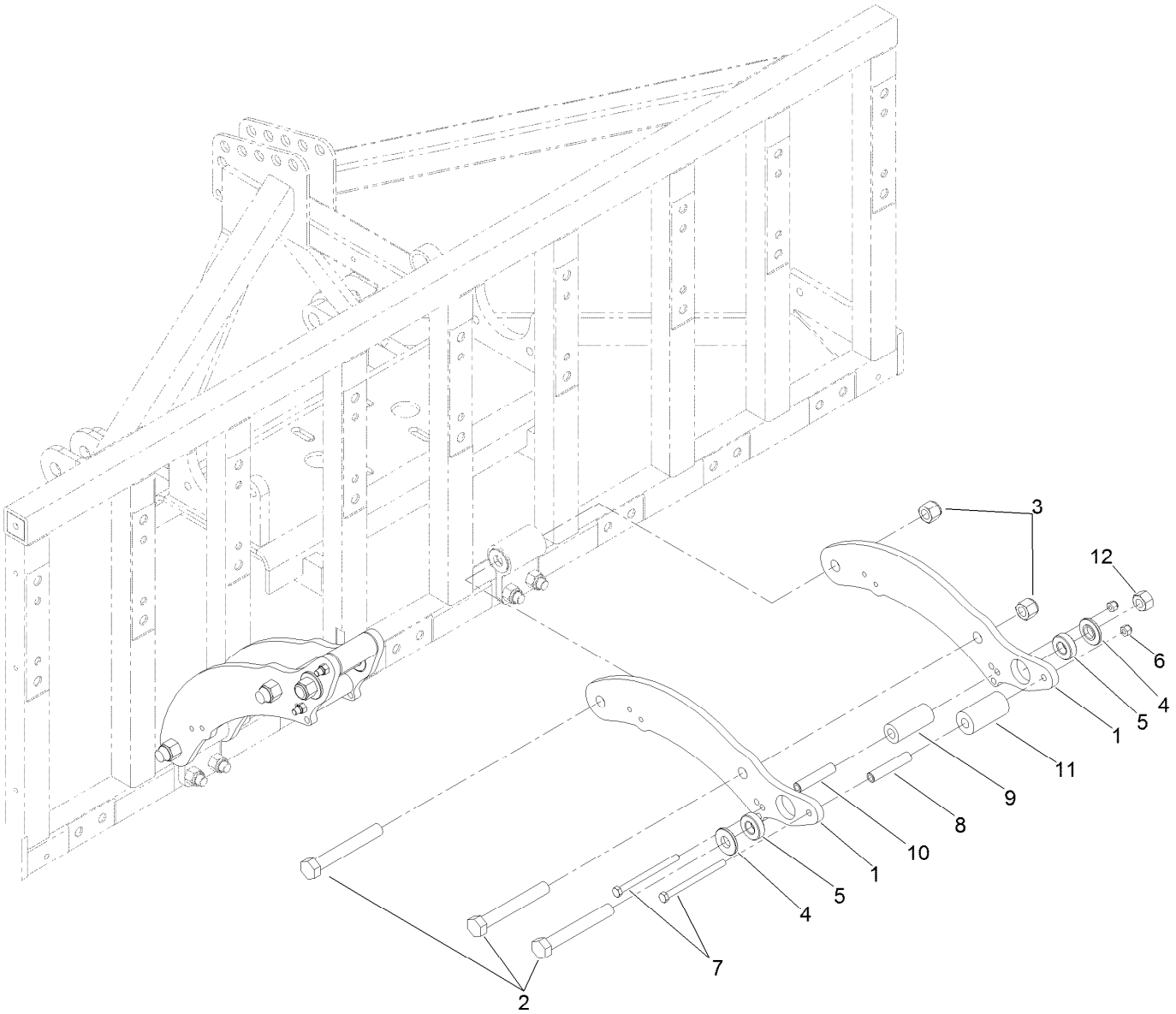

Linkage Arm Assembly

Ref.	Part Number	Qty.	Description
1	SG387055-03	16	Arm-Linkage, Arched
2	328-12	24	Screw-HH
3	3296-51	16	Nut-Lock, NI
4	SG437125	16	Bushing-Outer
5	SG337075	16	Bearing-Ball
6	3296-39	16	Nut-Lock, NI
7	323-21	16	Screw-HH
8	SG337300	8	Spacer-Linkage
9	SG487125	8	Bumper-Rubber
10	SG486312	8	Spacer-Arm, Linkage
11	SG487126	8	Bumper-Rubber
12	120-7252	8	Nut-Lock

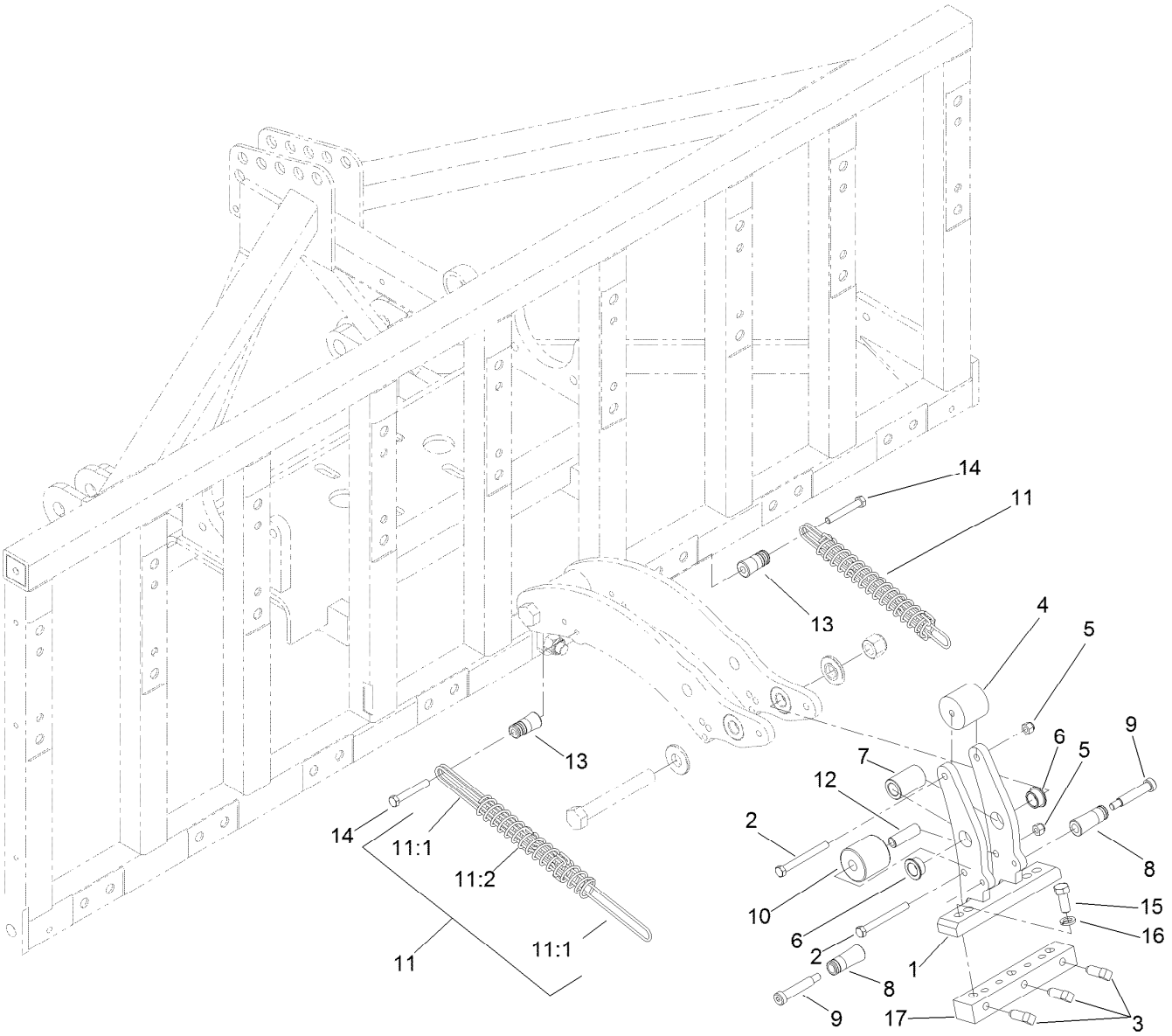

Head and Spring Assembly

Ref.	Part Number	Qty.	Description
1	SG404070-03	8	Head-Tine
2	323-15	16	Screw-HH
3	SG477125	40	Screw-Set, SQH
4	SG487200	8	Bumper-Head
5	3296-39	16	Nut-Lock, NI
6	SG447080	16	Bushing-Flanged
7	SG437100-03	8	Spacer-Head
8	SG449127-03	16	Post-Spring
9	SG449129	16	Bolt-Shoulder
10	SG487201	8	Spacer-Plastic

Ref.	Part Number	Qty.	Description
11	SG148154	16	Spring ASM
11:1	SG487256	3	Wire-Draw, Spring
11:2	SG487257	1	Spring-Compression
12	SG486311	8	Tube-Metal, Head Bumper
13	SG449126-03	16	Post-Spring
14	323-12	16	Screw-HH
15	325-6	16	Screw-HH
16	3253-7	16	Washer-Lock
17	SGH08704-03	8	Head-Tine, Adapter

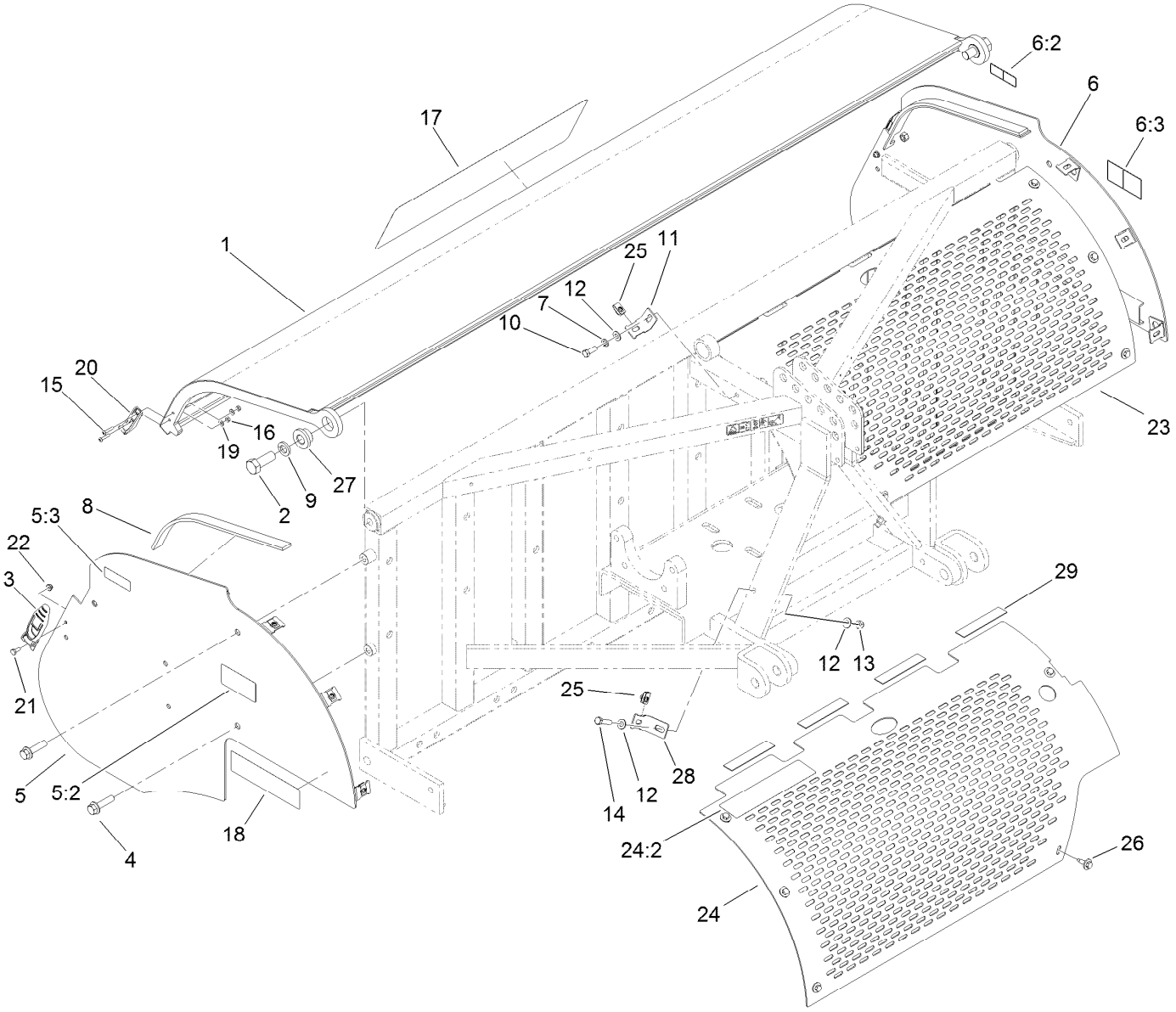

Screen and Hood Assembly

Ref.	Part Number	Qty.	Description
1	120-7329-03	1	Hood ASM
2	328-24	2	Screw-HH
3	103-2898	2	Latch-Rubber
4	3234-27	4	Screw-HHF
5	120-7256	1	RH Shield ASM
5:2	117-7051	1	Decal-Danger, Keep Away CE
5:3	120-0625	1	Decal-Warning
6	120-7257	1	LH Shield ASM
6:2	117-7051	1	Decal-Danger, Keep Away CE
6:3	120-0625	1	Decal-Warning
7	3253-21	2	Washer-Lock
8	120-7273	2	Strip-Rubber
9	3253-9	2	Washer-Lock
10	323-6	2	Screw-HH
11	120-1011-03	2	Bracket-Shield
12	3256-24	6	Washer-Flat
13	3296-39	2	Nut-Lock, NI
14	323-8	2	Screw-HH
15	108-3153	4	Screw-HSBH
16	3296-2	4	Nut-Lock, NI
17	117-7057	1	Decal
18	117-7086	2	Decal
19	3256-14	4	Washer-Flat
20	103-2897	2	Latch-Catch
21	321-3	2	Screw-HH
22	104-7201	2	Nut-HF
23	120-7326	1	Screen-Front, Left
24	120-7328	1	Front Right Guard ASM
24:2	117-7050	1	Decal-Warning, CE
25	94-2413	10	Nut-U
26	114-8418	10	Screw-HWH, Sems
27	120-1021	2	Bushing-Hood
28	120-7323	2	Bracket-Shield
29	120-1087	8	Strip-Rubber

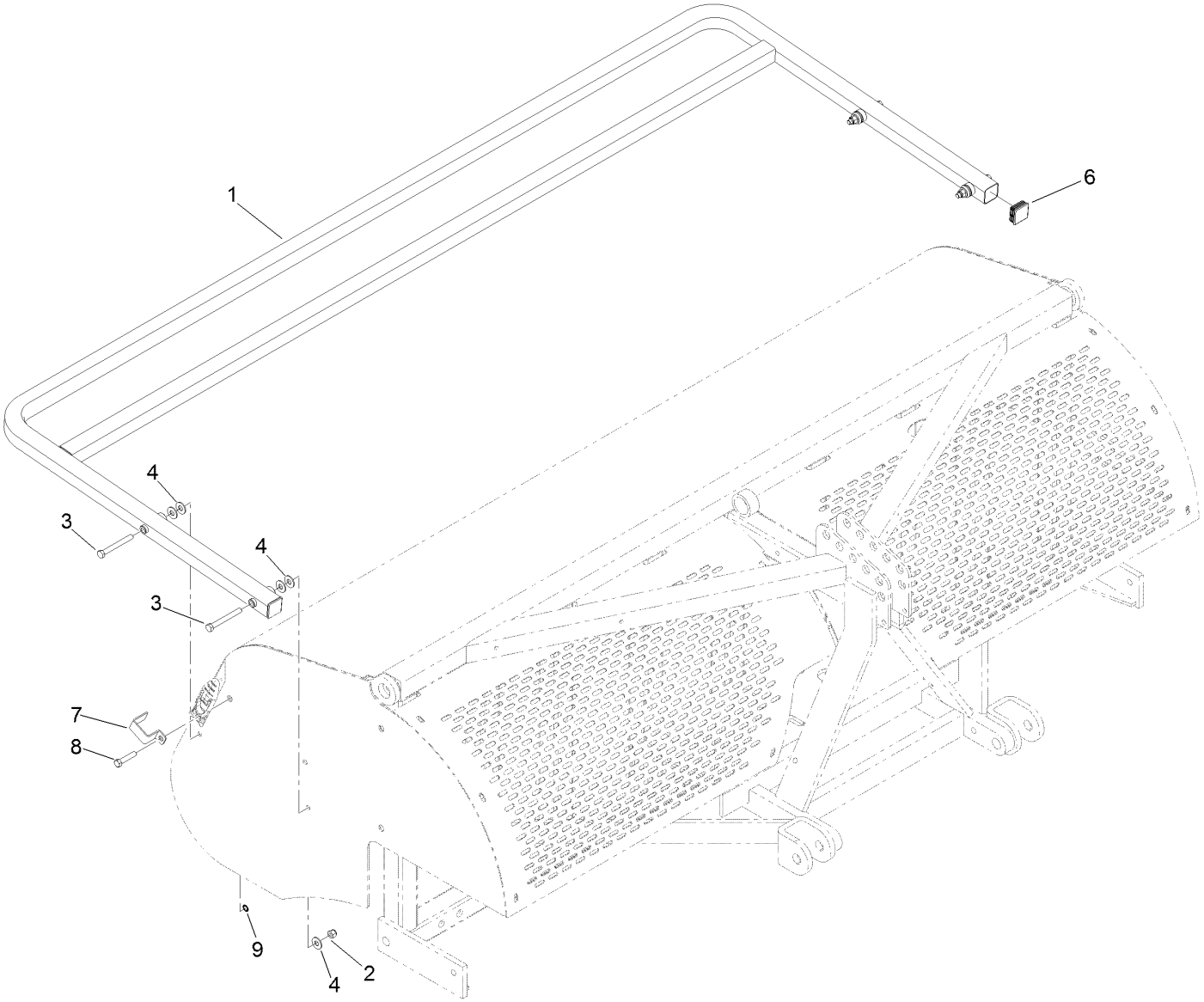

Rear Guard Assembly

Ref.	*Part Number*	*Qty.*	*Description*
1	120-7322-03	1	Rear Guard ASM
2	3296-39	4	Nut-Lock, NI
3	323-20	4	Screw-HH
4	80-6990	12	Washer-Hardened
6	120-7261	2	Cap-End, Square
7	110-4673	2	Lock-Latch, CE
8	323-53	2	Screw-HH
9	32151-72	2	Ring-Retaining

Attachments and Accessories

For 09934 ProCore SR70-S Aerator

Product Name	Model/Part
Rear Roller Kit	09953
2x18mm Tine Head Adapter Kit	117-7194
2x12mm or 2x5/16-inch Tine Head Adapter Kit	117-7195
4x3/8-inch or 4x5/16-inch Tine Head Adapter Kit	117-7196
8x3/8-inch Tine Head Adapter Kit	117-7199

Notes:

TORO®

Count on it.