Form No. 3425-642 Rev A

TORO®

Count on it.

Parts Catalog

24in Stand-On Aerator

Model No. 39514—Serial No. 404324200 and Up

Register at www.Toro.com.
Original Instructions (EN)

3425-642 A

Ordering Replacement Parts

To order replacement parts, please supply the part number, the quantity, and the description of each part desired.

Understanding Reference Numbers

Each identified part in an illustration has a reference number. The reference number for a part also appears in the parts list, along with other information about the part.

This catalog uses two special reference number formats, one to indicate parts in a service assembly and another to indicate the quantity of a given part in an illustration.

Service Assembly Reference Numbers

Parts in service assemblies have reference numbers in the form a:b. The a represents the reference number of the entire service assembly and the b represents a sequential number unique to each part within the service assembly.

For example, a wheel assembly might be identified by reference number 6, the tire by 6:1, the valve by 6:2, and the wheel by 6:3. When you order the assembly identified by reference number 6, you receive all parts identified by reference numbers 6:1,6:2, and 6:3. However, you may also order any part individually. Reference numbers of this type appear in illustration and in parts lists.

Reference Numbers Indicating Quantity

In an illustration, if a reference number indicates more than one part, the reference number has the form nX y. The n represents the quantity of the part, the X is the multiplication symbol, and the y represents the reference number.

For example, in an illustration, the reference number 2X 37 means that two of the parts identified by reference number 37 are indicated.

Contents

Frame Assembly 4
Main Frame Assembly No. 135-5236 5
Front Caster Assembly 6
Platform Assembly No. 126-9883 7
Control Tower and Brake Assembly 8
Control Tower Assembly No. 135-1701 9
Ground Drive Assembly 10
LH Transaxle Assembly No. 126-9064 12
RH Transaxle Assembly No. 126-9065 13
Wheel and Tire Assembly No. 126-9846 14
Idler Arm Assembly No. 126-9116 15
Tine Assembly 16
Left Hand Tine Wheel Assembly No. 126-9550 17
Right Hand Tine Wheel Assembly No. 126-9551 18
Motion Control Assembly 19
Electrical Assembly 20
Wire Harness Assembly No. 126-9535 22
Auxiliary Hydraulic Assembly 24
Manifold Assembly No. 126-9321 26
Engine Assembly 28

© 2018—The Toro® Company
8111 Lyndale Avenue South
Bloomington, MN 55420

Contact us at www.Toro.com.
Printed in the USA.
All Rights Reserved

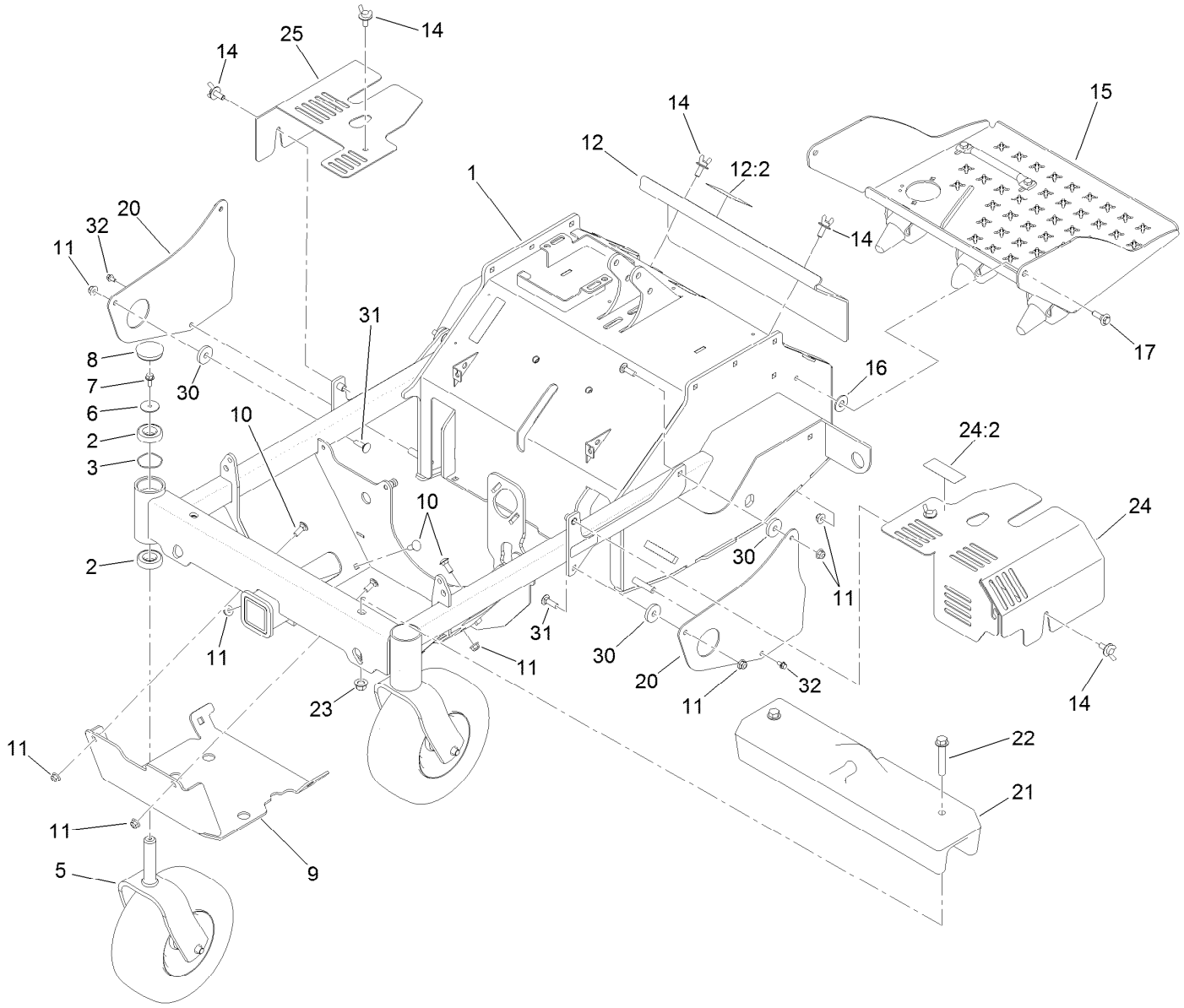

Frame Assembly

Ref.	Part Number	Qty.	Description
1	135-5236	1	Main Frame ASM
2	109-3678	4	Bearing-Ball
3	126-5897	2	Spring
5		2	Front Caster ASM ●
6	3256-68	2	Washer-Flat
7	3234-5	2	Screw-HHF
8	116-4348	2	Cap-Grease
9	126-8726-03	1	Guard-Engine
10	3231-2	4	Bolt-CARR
11	104-8301	10	Nut-HF, NI
12	126-8801	1	Access Cover ASM
12:2	121-6163	1	Decal-Operation, Tine Ground (CE)
14	135-4629	6	Screw-Sems (3/8-16 X 1)

Ref.	Part Number	Qty.	Description
15	126-9883	1	Platform ASM
16	3256-6	2	Washer-Flat
17	614672	2	Screw-Shoulder, HWH
20	135-5138-01	2	Guard-Chain
21	135-2017	1	Weight-Front
22	3234-40	2	Screw-HF
23	99-5107	2	Nut-Lock
24	135-3270	1	Hydro-Cover
24:2	135-3183	1	Decal-Release, Drive
25	135-0822-03	1	Cover-Hydro
30	1-543610	4	Washer-Clutch
31	3231-25	4	Bolt-CARR
32	3234-13	2	Screw-HHF

● Not serviced separately

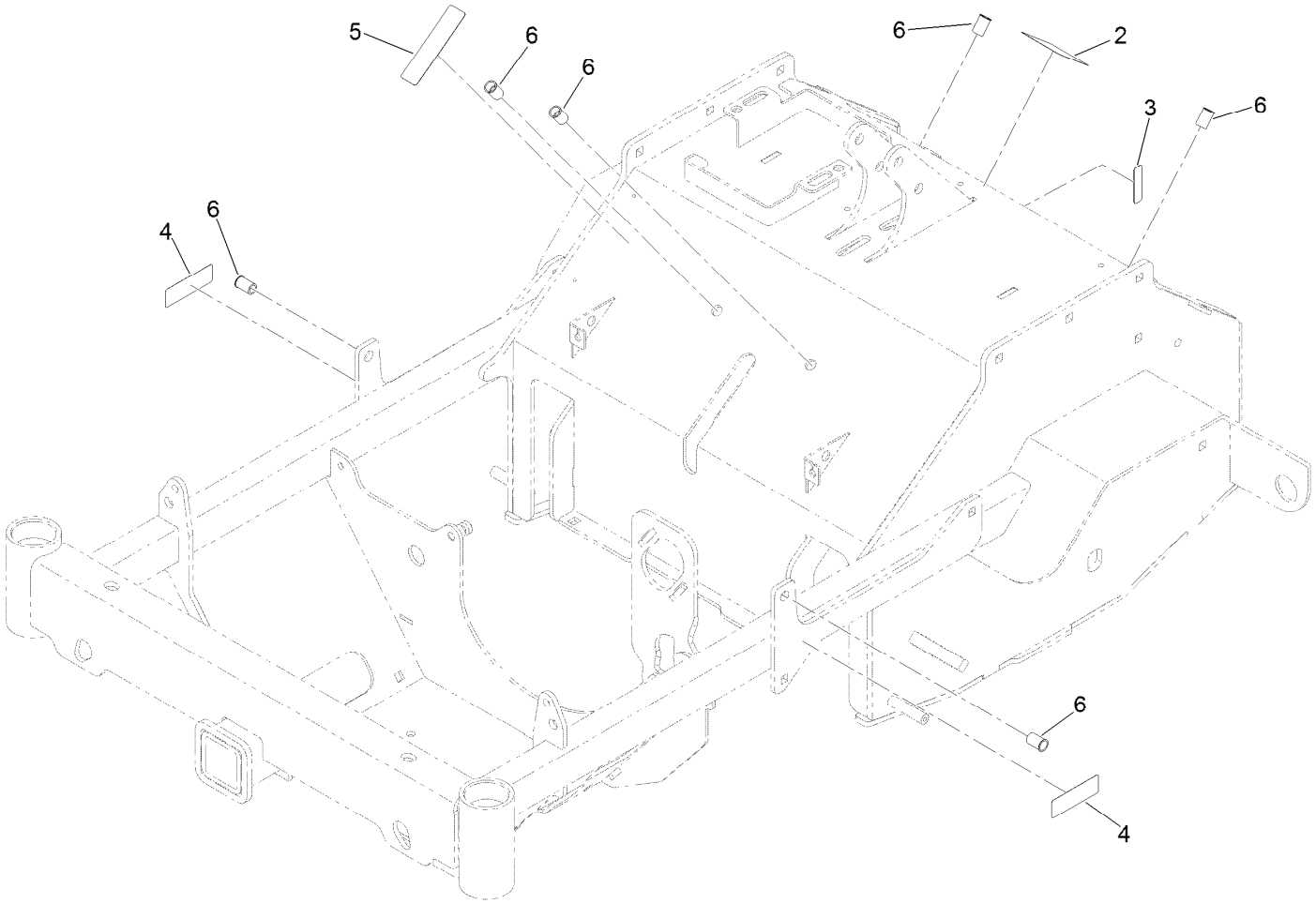

Main Frame Assembly No. 135-5236

Ref.	*Part Number*	*Qty.*	*Description*
2	121-6150	1	Decal-Warning
3	120-9570	1	Decal-Warning
4	121-6161	2	Decal-Danger
5	133-8062	1	Decal-Arrestor, Spark
6	32148-10	6	Nut-Clinch

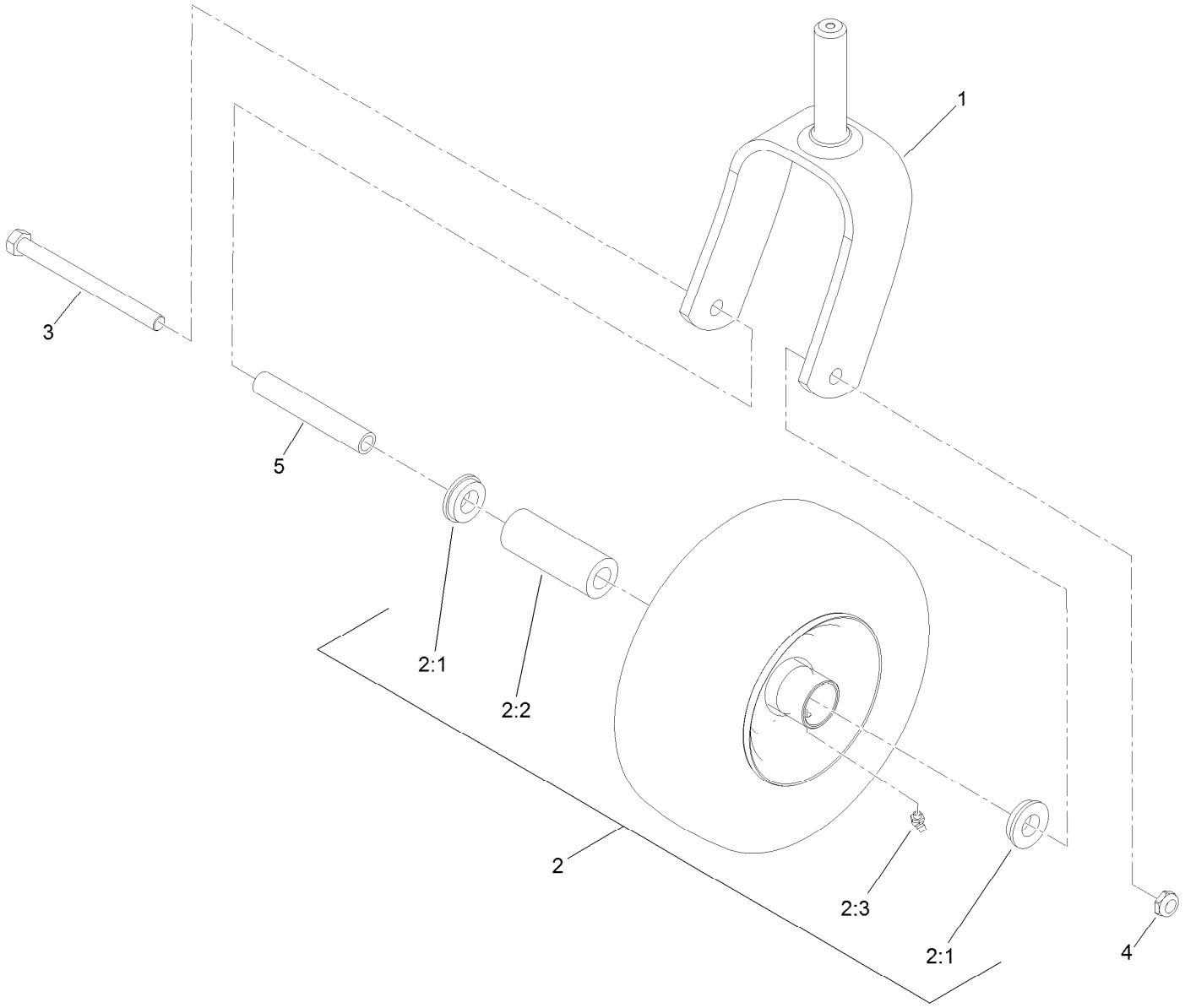

Front Caster Assembly

Ref.	*Part Number*	*Qty.*	*Description*
1	135-1354-01	1	Fork-Caster
2	126-9724	1	Wheel And Tire ASM
2:1	1-513810	2	Bushing
2:2	1-513809	1	Bearing
2:3	302-61	1	Fitting-Grease
3	325-20	1	Screw-HH
4	3296-45	1	Nut-Hex
5	1-513547	1	Spacer

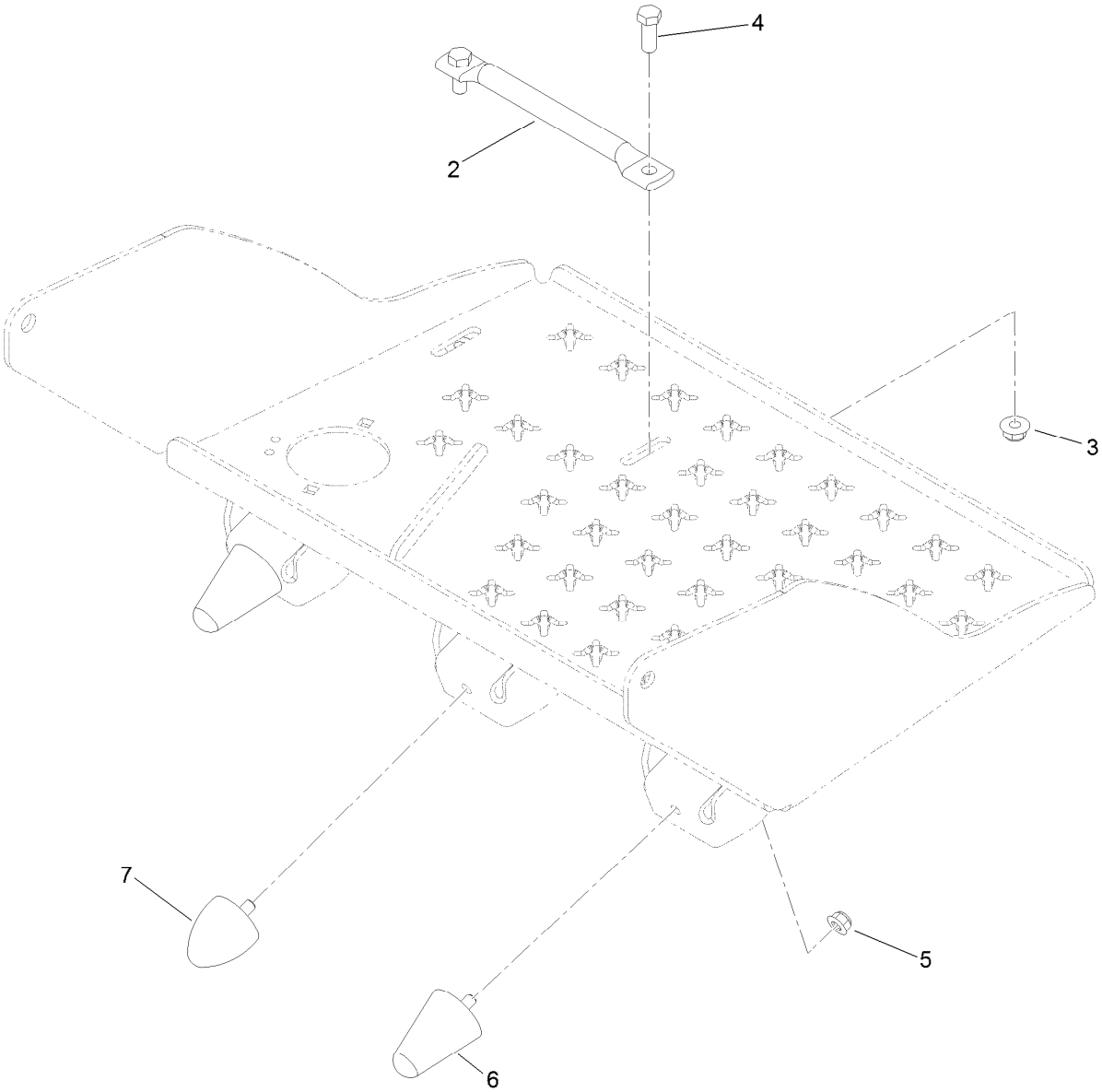

Platform Assembly No. 126-9883

Ref.	*Part Number*	*Qty.*	*Description*
2	116-8950-01	1	Rocker-Pedal, Foot
3	104-8301	2	Nut-HF, NI
4	323-6	2	Screw-HH
5	104-8300	3	Nut-HF, NI
6	114-1925	2	Bumper-Rubber
7	114-1926	1	Bumper-Rubber

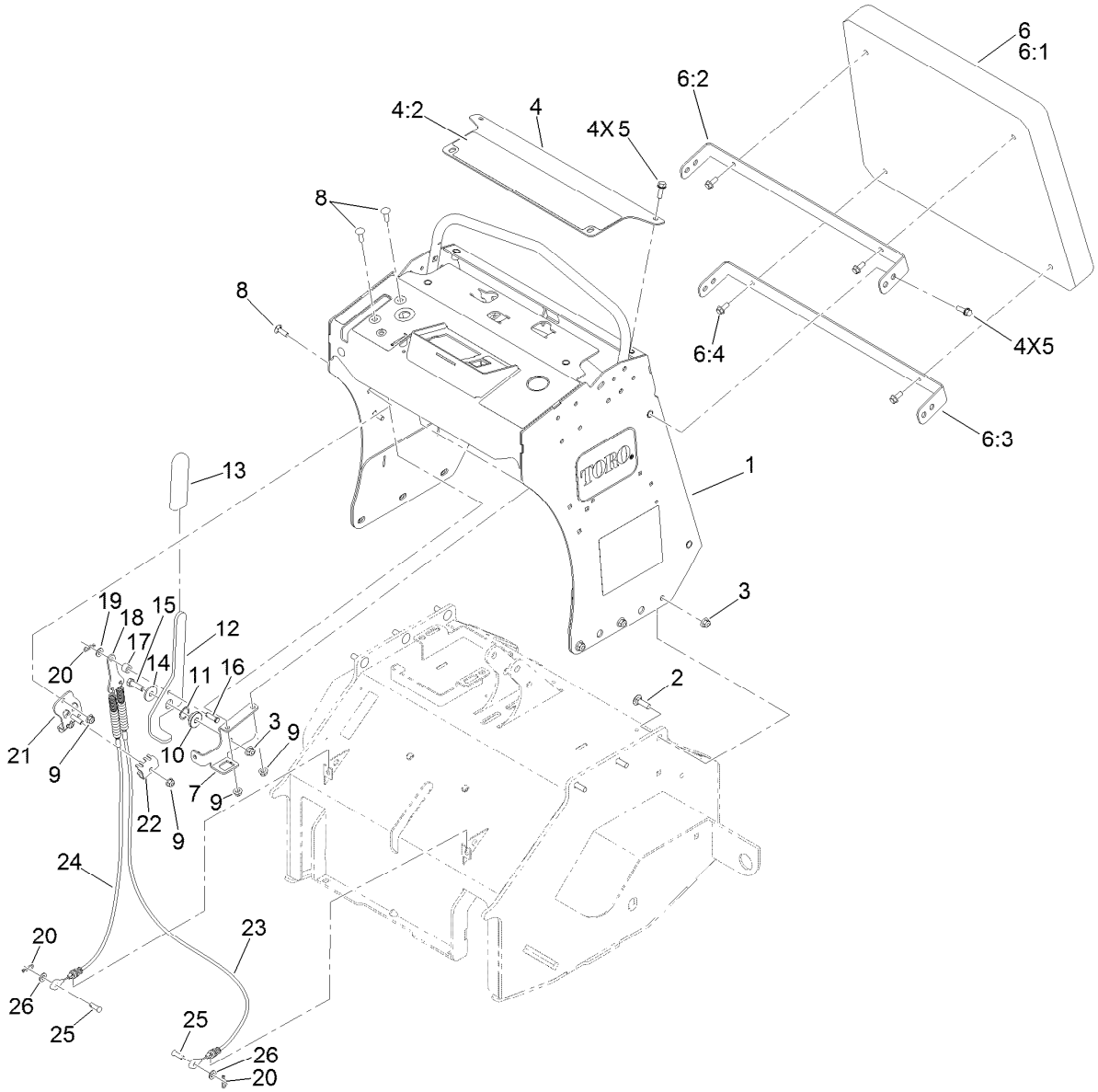

Control Tower and Brake Assembly

Ref.	Part Number	Qty.	Description
1	135-1701	1	Control Tower ASM
2	3231-25	6	Bolt-CARR
3	104-8301	7	Nut-HF, NI
4	135-1696	1	Control Panel ASM
4:2	135-2014	1	Decal-Warning
5	3234-29	8	Screw-HHF
6		1	Cushion ASM ●
6:1	135-1694	1	Cushion-Black
6:2	135-1712-03	1	Bracket-Pad, Upper
6:3	135-1713-03	1	Bracket-Pad, Lower
6:4	98-9940	4	Screw-HHF
7	135-1714-03	1	Bracket-Pivot, Brake
8	3230-22	5	Screw-CARR
9	104-8300	6	Nut-HF, NI
10	126-5989	1	Pivot-Flange
11	119-4164	1	Washer-Wave

Ref.	Part Number	Qty.	Description
12	135-1715	1	Handle-Brake
13	1-633268	1	Grip-Lever
14	2844	1	Washer
15	323-7	1	Screw-HH
16	283-61	1	Pin-Yoke
17	114-8549	1	Bushing
18	132-1188	1	Yoke-Cable
19	93-6079	1	Spacer-Nylon
20	3290-307	3	Pin-Cotter
21	132-7582	1	Mount-Cable, Brake
22	132-1187	1	Clamp-Cable
23	135-0081	1	Cable-Brake, LH
24	135-0082	1	Cable-Brake, RH
25	283-75	2	Pin-Clevis
26	3256-23	2	Washer-Plain

● Not serviced separately

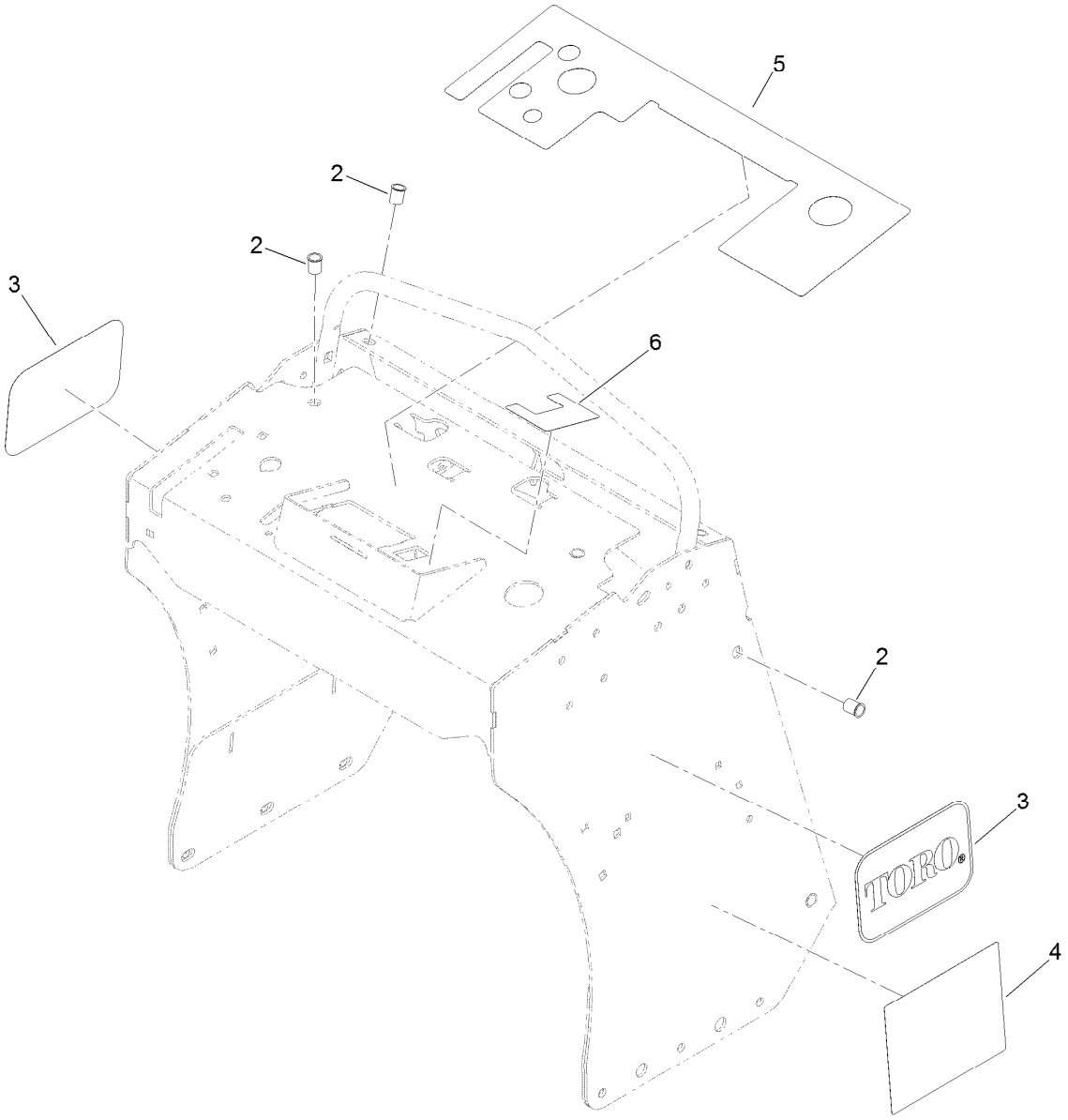

Control Tower Assembly No. 135-1701

Ref.	*Part Number*	*Qty.*	*Description*
2	32148-7	8	Nut-Clinch
3	62-5550	2	Decal
4	135-3685	1	Decal-Aid, Service
5	135-2013	1	Decal-Panel, Control
6	135-2016	1	Decal-Control, Tine

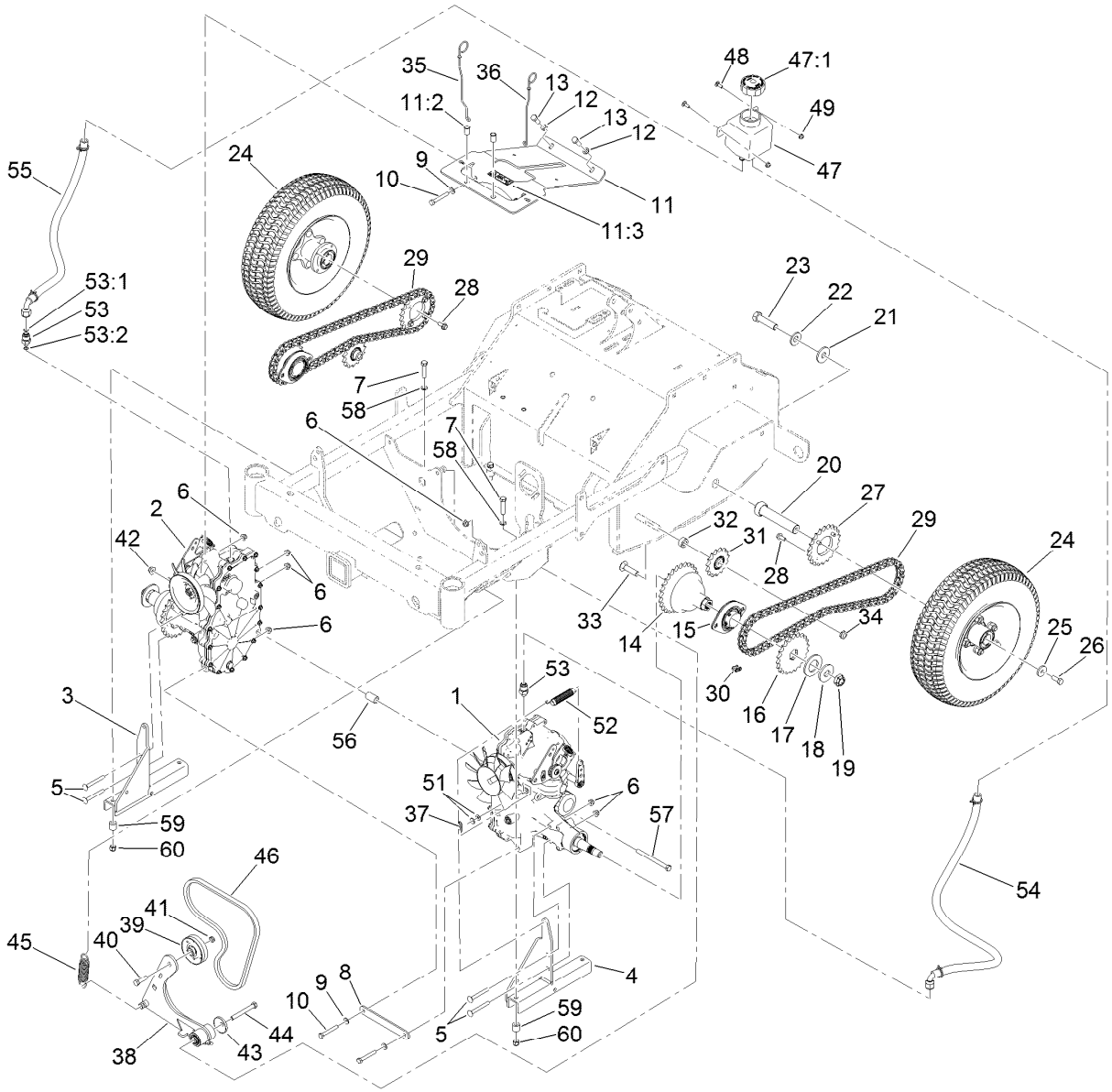

Ground Drive Assembly

Ref.	Part Number	Qty.	Description
1	126-9064	1	Hydro-Zt3100, LH
2	126-9065	1	Hydro-Zt3100, RH
3	135-2004-03	1	Mount-Hydro, RH
4	135-2006-03	1	Mount-Hydro, LH
5	3230-9	4	Screw-CARR
6	104-8300	8	Nut-HF, NI
7	323-52	4	Screw-HH
8	126-9092-03	1	Crossmember-Transmission
9	1-303334	4	Washer-Spring
10	132-3838	4	Screw-HH
11	135-2497	1	Support-Cover
11:2	32148-10	2	Nut-Clinch
11:3	121-6161	1	Decal-Danger
12	3253-21	2	Washer-Lock
13	323-6	2	Screw-HH
14	135-0537	2	Hub-Bell
15	135-1056	2	Bearing-Flanged
16	135-0347	2	Sprocket
17	135-0360	2	Washer-Spacer
18	26-1990	2	Washer-Belleville
19	116-2839	2	Nut-Lock

Ref.	Part Number	Qty.	Description
20	135-1895	2	Axle-Wheel, Drive
21	135-1894	2	Washer-Spacer
22	125-1736	2	Washer-Belleville
23	327-7	2	Screw-HH
24	126-9846	2	Wheel And Tire ASM
25	53-6380	3	Washer-Flat
26	3235-22	2	Screw-HH, Lock
27	126-9075	2	Sprocket
28	98-9940	8	Screw-HHF
29	135-1100	2	Chain-Roller
30	116-6897	2	Link-Connecting
31	126-9108	2	Sprocket-Idler, 15T
32	126-9498	2	Spacer
33	3233-4	2	Screw-CARR
34	3296-45	2	Nut-Hex
35	135-0683	1	Rod-Bypass, LH
36	135-0685	1	Rod-Bypass, RH
37	3290-307	2	Pin-Cotter
38	126-9116	1	Idler Arm ASM
39	116-9715	1	Pulley-Idler
40	323-29	1	Screw-HH

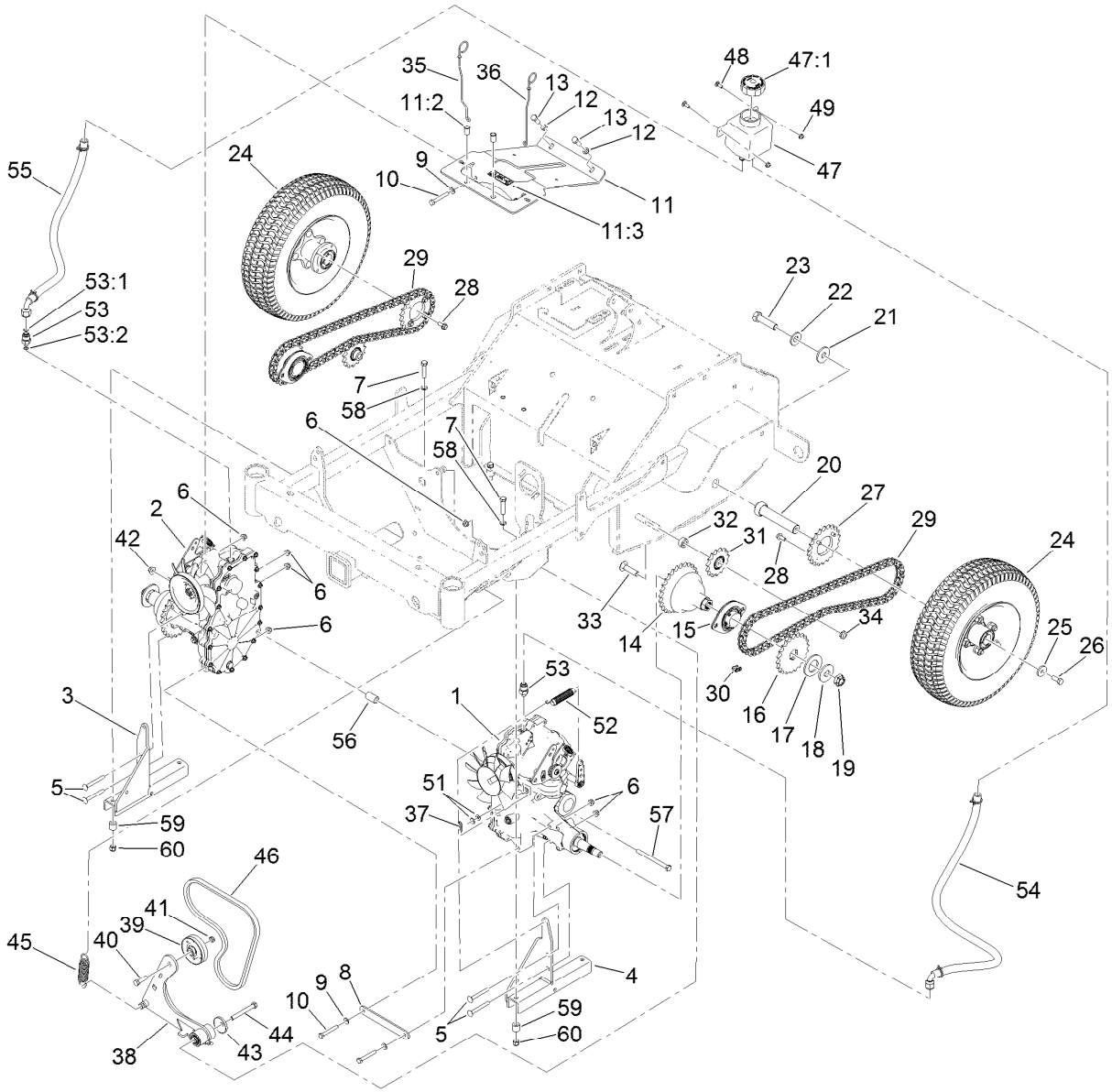

Ground Drive Assembly (continued)

Ref.	Part Number	Qty.	Description
41	3296-59	2	Nut-Lock, NI
42	104-8301	1	Nut-HF, NI
43	103-2916	1	Guard-Top
44	323-20	1	Screw-HH
45	1-603402	1	Spring-Extension
46	126-9834	1	Belt-V, Cogged
47	109-2250	1	Tank-HYD
47:1	109-3320	1	Cap-Reservoir, HYD
48	3229-1	2	Bolt-CARR
49	104-7201	2	Nut-HF
51	119-8952	4	Washer

Ref.	Part Number	Qty.	Description
52	109-7124	2	Spring-Extension
53	135-3138	2	Fitting-Straight
53:1	237-78	1	O-Ring
53:2	1-603992	1	O-Ring
54	135-0061	1	Hose ASM
55	135-0062	1	Hose ASM
56	135-0124	1	Spacer
57	323-23	1	Screw-HH
58	106-5592	4	Spacer-Brake, Parking
59	98-8895	4	Spacer
60	112-0236	4	Nut-Lock

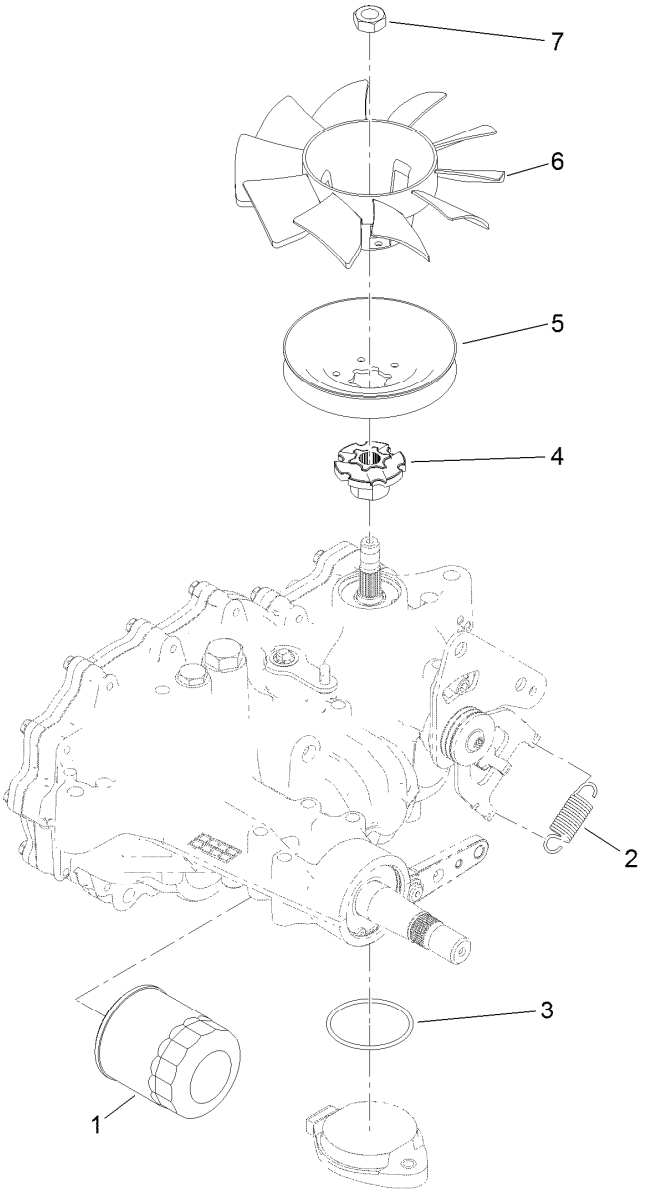

LH Transaxle Assembly No. 126-9064

Ref.	*Part Number*	*Qty.*	*Description*
1	109-3321	1	Element-Oil Filter, HYD
2	135-3931	1	Spring-Extension
3	109-3540	1	O Ring-Seal
4	116-9705	1	Hub-Pulley
5	116-9707	1	Pulley
6	126-0291	1	Fan-7.0 Inch (10 Blade)
7	116-9714	1	Nut-HJ
99	135-3604	1	Brake Shaft Seal Kit ●

● Not illustrated

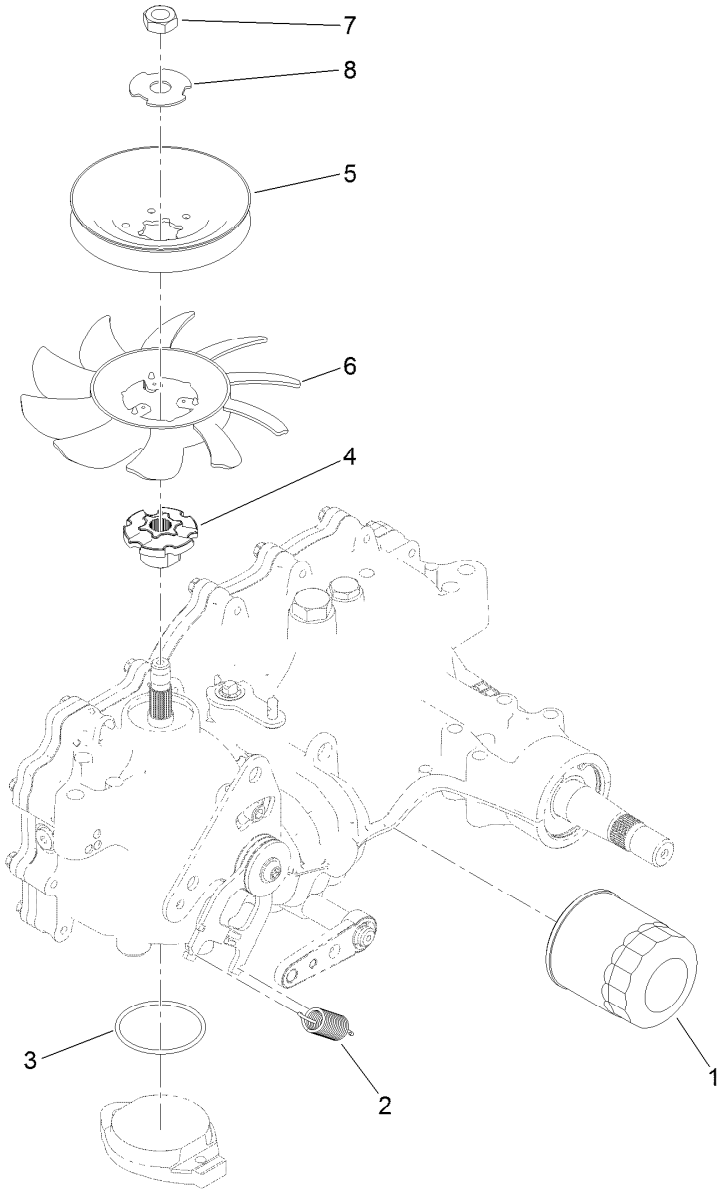

RH Transaxle Assembly No. 126-9065

Ref.	Part Number	Qty.	Description
1	109-3321	1	Element-Oil Filter, HYD
2	135-3931	1	Spring-Extension
3	109-3540	1	O Ring-Seal
4	116-9705	1	Hub-Pulley
5	116-9707	1	Pulley
6	116-9706	1	Fan
7	116-9714	1	Nut-HJ
8	116-9708	1	Washer-Slotted
99	135-3604	1	Brake Shaft Seal Kit ●

● Not illustrated

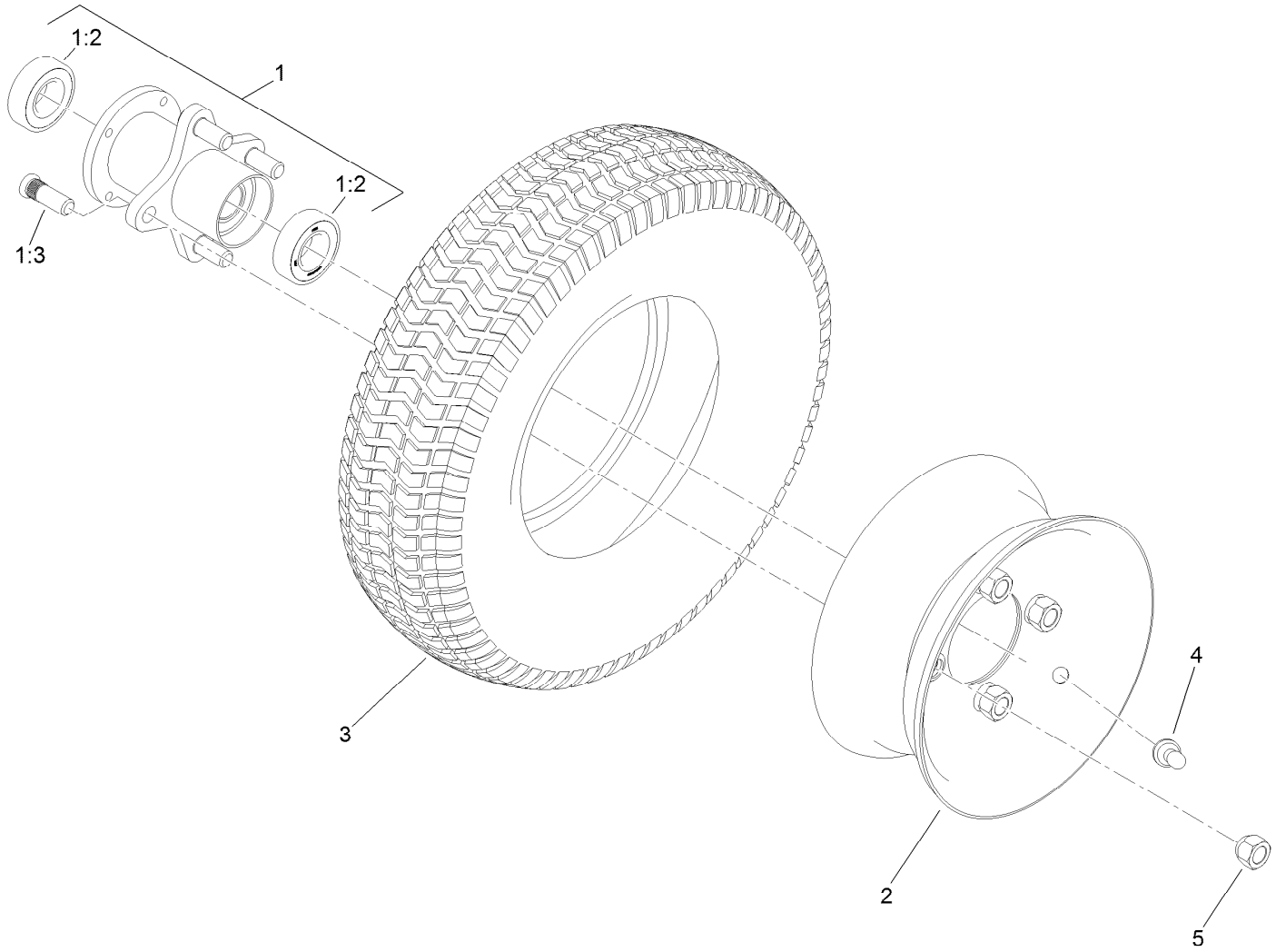

Wheel and Tire Assembly No. 126-9846

Ref.	*Part Number*	*Qty.*	*Description*
1		1	Wheel Hub ASM ●
1:2	116-0720	2	Bearing-Ball
1:3	116-1696	4	Stud-Wheel
2		1	Rim ●
3		1	Tire ●
4	232-27	1	Stem-Valve
5	242-50	4	Nut-Lug

● Not serviced separately

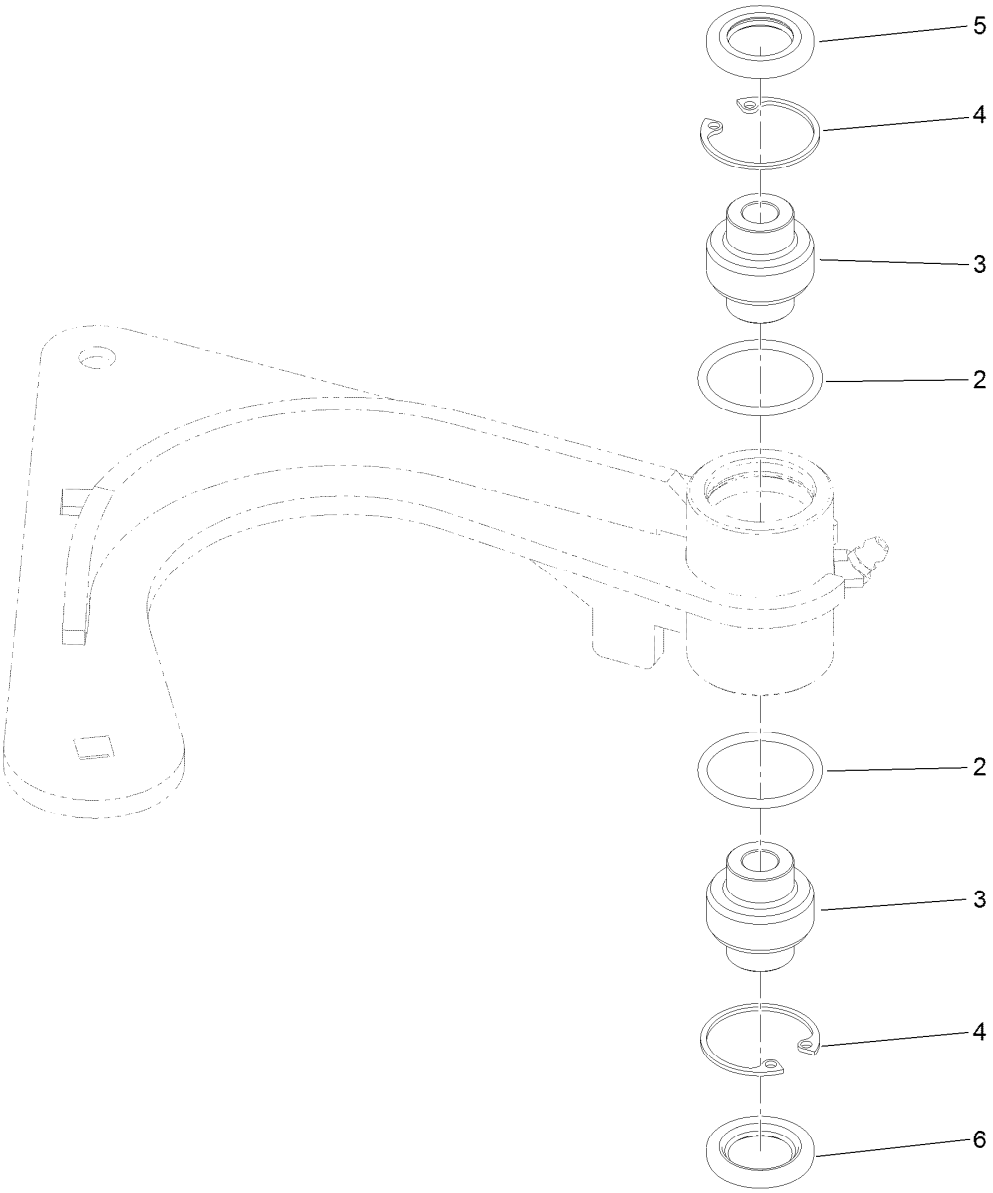

Idler Arm Assembly No. 126-9116

Ref.	Part Number	Qty.	Description
2	106-7159	2	O-Ring
3	103-3504	2	Bearing-Spherical
4	32120-10	2	Ring-Snap
5	103-3505	1	Seal-Lip, Double
6	103-3506	1	Seal-Lip, Single

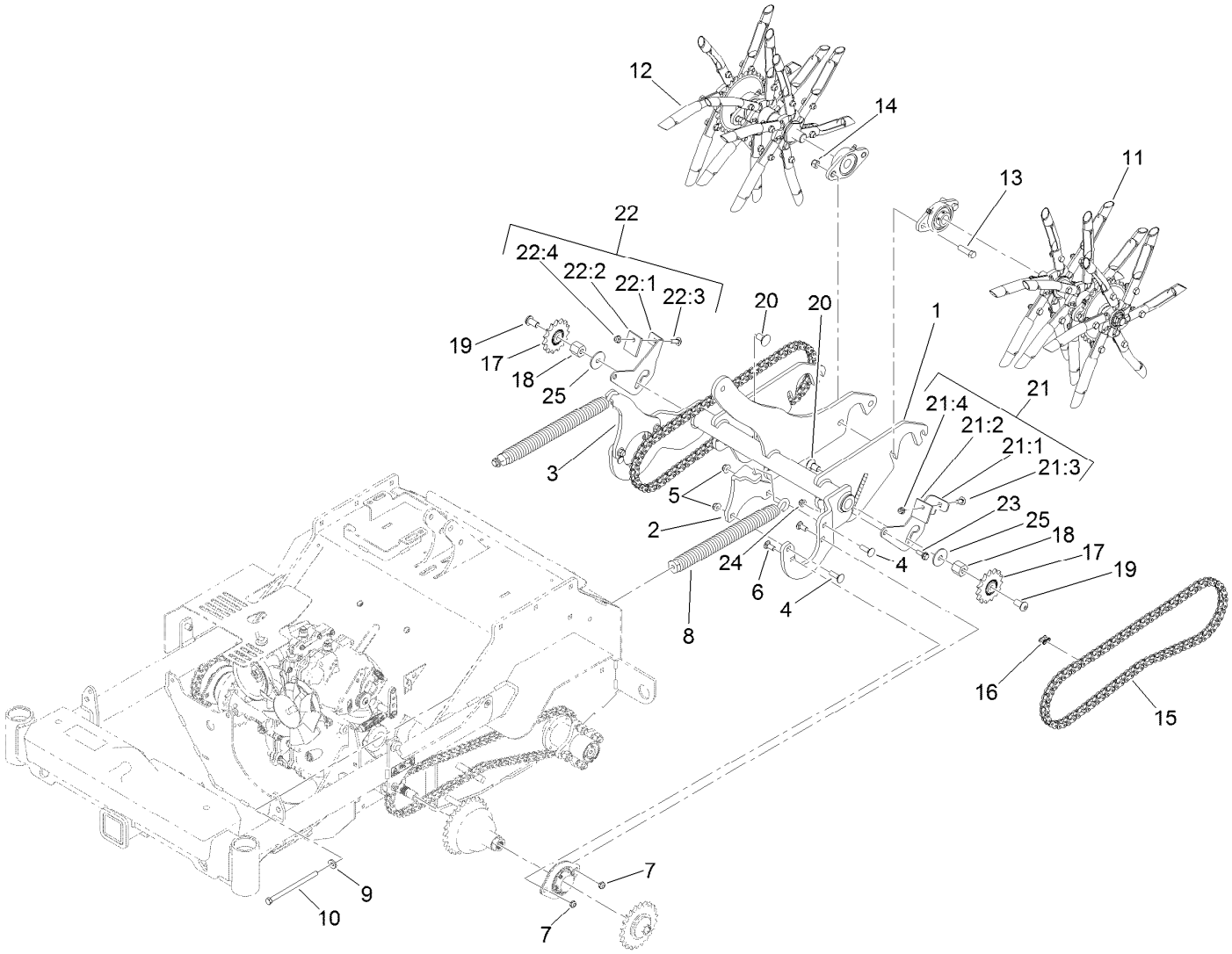

Tine Assembly

Ref.	Part Number	Qty.	Description
1	135-0810-03	1	Lift-Tine
2	135-1060-03	1	Arm-Spring, LH
3	135-1061-03	1	Arm-Spring, RH
4	3231-25	4	Bolt-CARR
5	104-8301	4	Nut-HF, NI
6	3231-12	4	Bolt-CARR
7	3296-59	4	Nut-Lock, NI
8	116-0000	2	Spring-Extension
9	98-5975	2	Washer-Belleville
10	323-58	2	Bolt-TAP, HH
11	126-9550	1	LH Tine Wheel ASM
12	126-9551	1	RH Tine Wheel ASM
13	324-6	2	Screw-HH
14	126-9780	2	Nut-Lock
15	135-1100	2	Chain-Roller
16	116-6897	2	Link-Connecting
17	126-9108	2	Sprocket-Idler, 15T
18	135-2242	2	Spacer

Ref.	Part Number	Qty.	Description
19	99-8446	2	Screw- Pan Socket Head
20	3233-9	2	Screw-CARR
21	135-2405	1	LH Debris Deflector ASM
21:1	135-2325	1	Bracket-Deflector, Debris (LH)
21:2	135-2403	1	Deflector-Debris
21:3	3230-10	1	Bolt-CARR
21:4	104-8300	1	Nut-HF, NI
22	135-2404	1	RH Debris Deflector ASM
22:1	135-2406	1	Bracket-Deflector, Debris (RH)
22:2	135-2403	1	Deflector-Debris
22:3	3230-10	1	Bolt-CARR
22:4	104-8300	1	Nut-HF, NI
23	27-0410	2	Screw-Shoulder
24	104-8300	2	Nut-HF, NI
25	120-3856	2	Washer-Flat

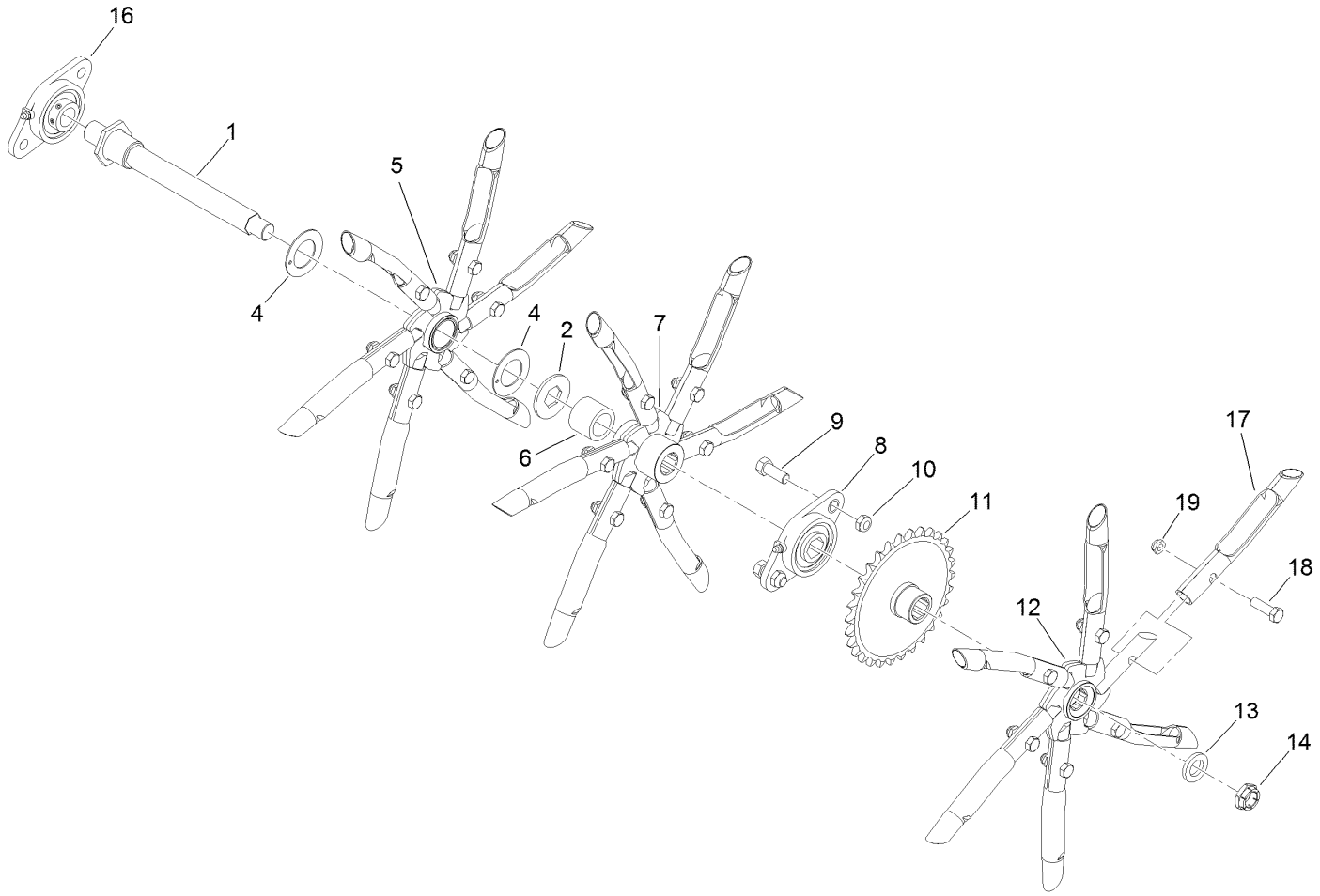

Left Hand Tine Wheel Assembly No. 126-9550

Ref.	Part Number	Qty.	Description
1	135-2980	1	Tine Shaft ASM
2	135-2977	1	Keeper-Tine, Floating
4	126-9619	2	Washer-Thrust
5	126-9540	1	Floating Spyder ASM
6	126-9715	1	Spacer-Tine
7	126-9625	1	Driven Spyder ASM
8	126-9705	1	Bearing-Hex Bore
9	126-9822	2	Screw-HH
10	126-9780	2	Nut-Lock

Ref.	Part Number	Qty.	Description
11	126-9624	1	Sprocket ASM
12	126-9630	1	Driven Spyder ASM
13	135-0502	1	Washer-Spacer
14	135-1528	1	Nut-Lock
16	126-9704	1	Bearing-Round Bore
17	126-2143	18	Tine-Coring (3/4 Inch)
18	323-7	18	Screw-HH
19	3296-59	18	Nut-Lock, NI

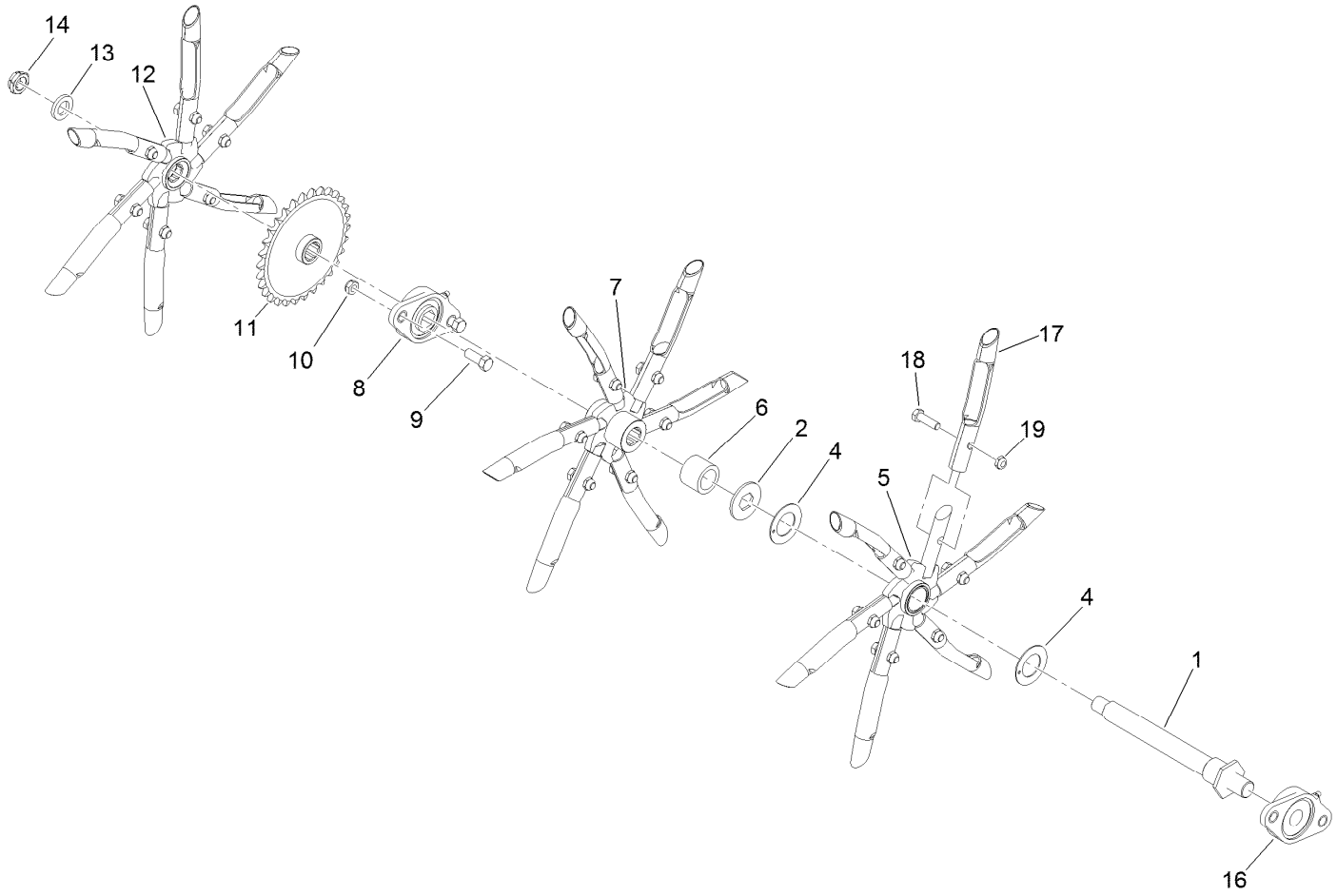

Right Hand Tine Wheel Assembly No. 126-9551

Ref.	Part Number	Qty.	Description
1	135-2980	1	Tine Shaft ASM
2	135-2977	1	Keeper-Tine, Floating
4	126-9619	2	Washer-Thrust
5	126-9540	1	Floating Spyder ASM
6	126-9715	1	Spacer-Tine
7	126-9625	1	Driven Spyder ASM
8	126-9705	1	Bearing-Hex Bore
9	126-9822	2	Screw-HH
10	126-9780	2	Nut-Lock

Ref.	Part Number	Qty.	Description
11	126-9624	1	Sprocket ASM
12	126-9630	1	Driven Spyder ASM
13	135-0502	1	Washer-Spacer
14	135-1528	1	Nut-Lock
16	126-9704	1	Bearing-Round Bore
17	126-2143	18	Tine-Coring (3/4 Inch)
18	323-7	18	Screw-HH
19	3296-59	18	Nut-Lock, NI

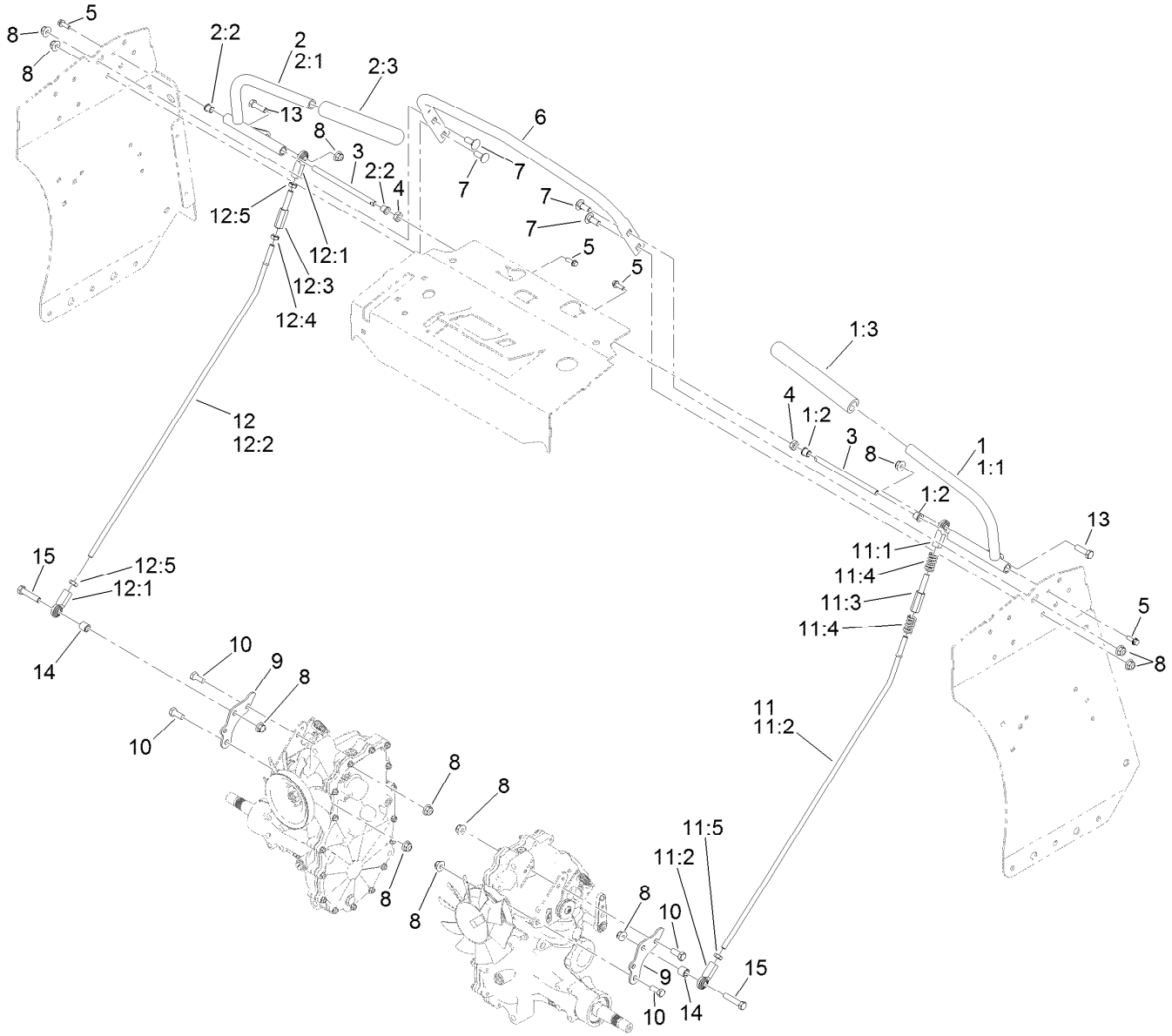

Motion Control Assembly

Ref.	Part Number	Qty.	Description
1		1	LH Motion Handle ASM ●
1:1	135-1575-03	1	Handle-Control, LH
1:2	103-9928	2	Bearing
1:3	103-8153	1	Grip-Lever, Control
2		1	RH Motion Handle ASM ●
2:1	135-1576-03	1	Handle-Control, RH
2:2	103-9928	2	Bearing
2:3	103-8153	1	Grip-Lever, Control
3	116-4978	2	Shaft-Pivot, Motion Control
4	116-4198	2	Spacer-Shaft, Drive Lever
5	117-8304	4	Screw-HHF
6	135-1557-01	1	Bar-Reference
7	3231-2	4	Bolt-CARR
8	104-8301	12	Nut-HF, NI
9	135-0305	2	Arm-Motion
10	323-5	4	Screw-HH

Ref.	Part Number	Qty.	Description
11		1	LH Motion Linkage ASM ●
11:1	103-0608	2	Joint-Ball, End
11:2	135-1579	1	Linkage-Motion
11:3	116-4755	1	Rod-Adjustment
11:4	116-7560	2	Spring-Compression
11:5	3220-3	1	Nut-HJ
12		1	RH Motion Linkage ASM ●
12:1	103-0608	2	Joint-Ball, End
12:2	135-1579	1	Linkage-Motion
12:3	116-4755	1	Rod-Adjustment
12:4	3220-16	1	Nut-Hex Jam, LH
12:5	3220-3	2	Nut-HJ
13	323-7	2	Screw-HH
14	126-9682	2	Spacer
15	323-9	2	Screw-HH

● Not serviced separately

Electrical Assembly

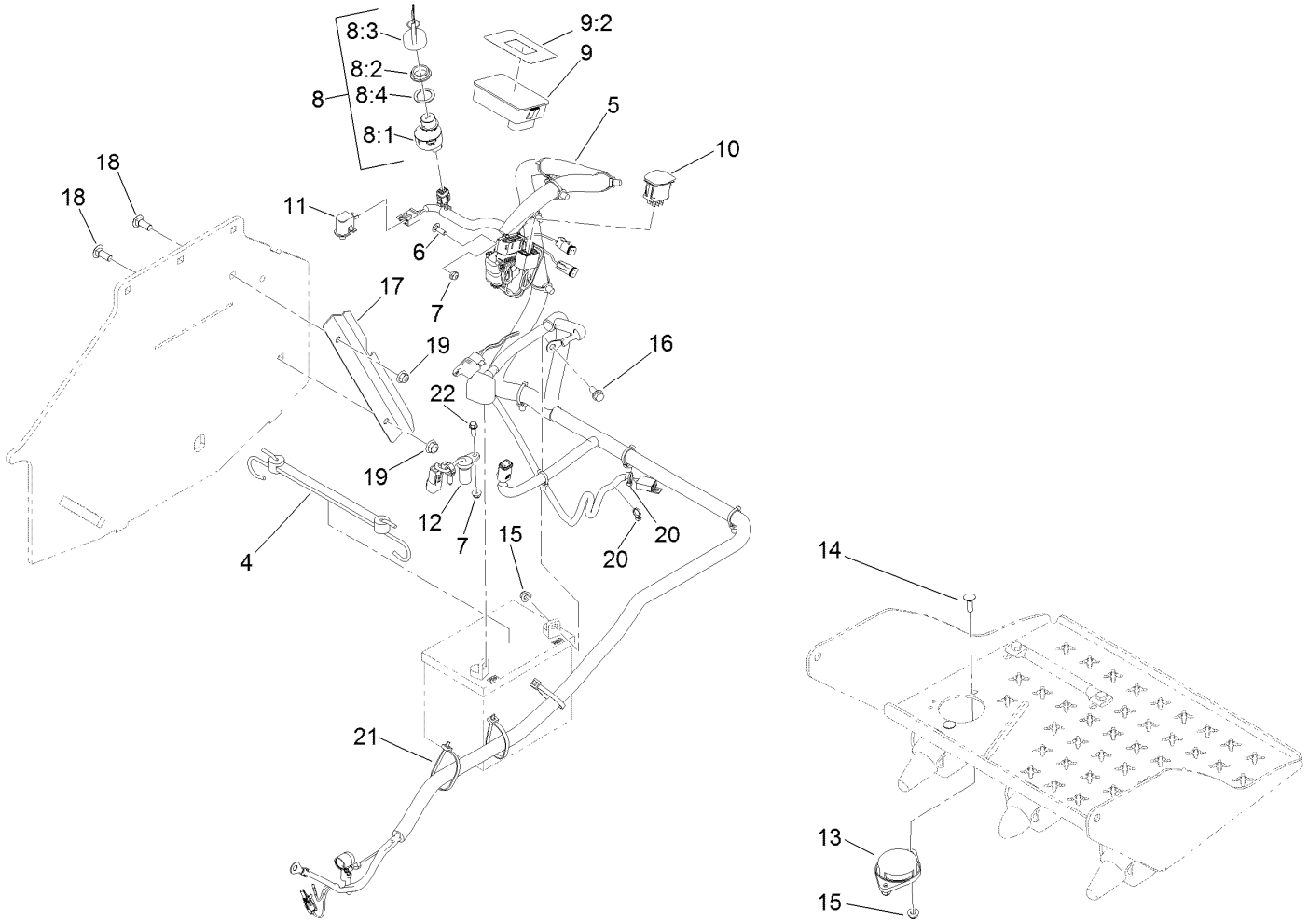

Electrical Assembly (continued)

Ref.	Part Number	Qty.	Description
4	104-2466	1	Holddown-Battery
5	126-9535	1	Harness-Wire
6	3229-1	1	Bolt-CARR
7	104-7201	2	Nut-HF
8	126-6285	1	Ignition Switch ASM
8:1		1	Switch-Ignition ●
8:2	108-8660	1	Nut-Mounting
8:3	106-5270	1	Ignition Key Set
8:4	108-8659	1	Washer-Backup
9	135-2500	1	Hour Meter ASM
9:2	135-1854	1	Decal-Meter, Hour
10	100-1535	1	Switch

Ref.	Part Number	Qty.	Description
11	82-2190	1	Switch-Bail
12	135-0101	1	Sensor-Quadrature
13	92-6282	1	Switch-Seat
14	3230-2	2	Bolt-CARR
15	104-8300	4	Nut-HF, NI
16	3234-5	2	Screw-HHF
17	126-9701-03	1	Guard-Harness
18	3231-2	2	Bolt-CARR
19	104-8301	2	Nut-HF, NI
20	1-303287	2	Tie-Cable
21	1-303335	3	Tie-Plastic
22	32105-15	1	Screw-HWH

● Not serviced separately

Wire Harness Assembly No. 126-9535

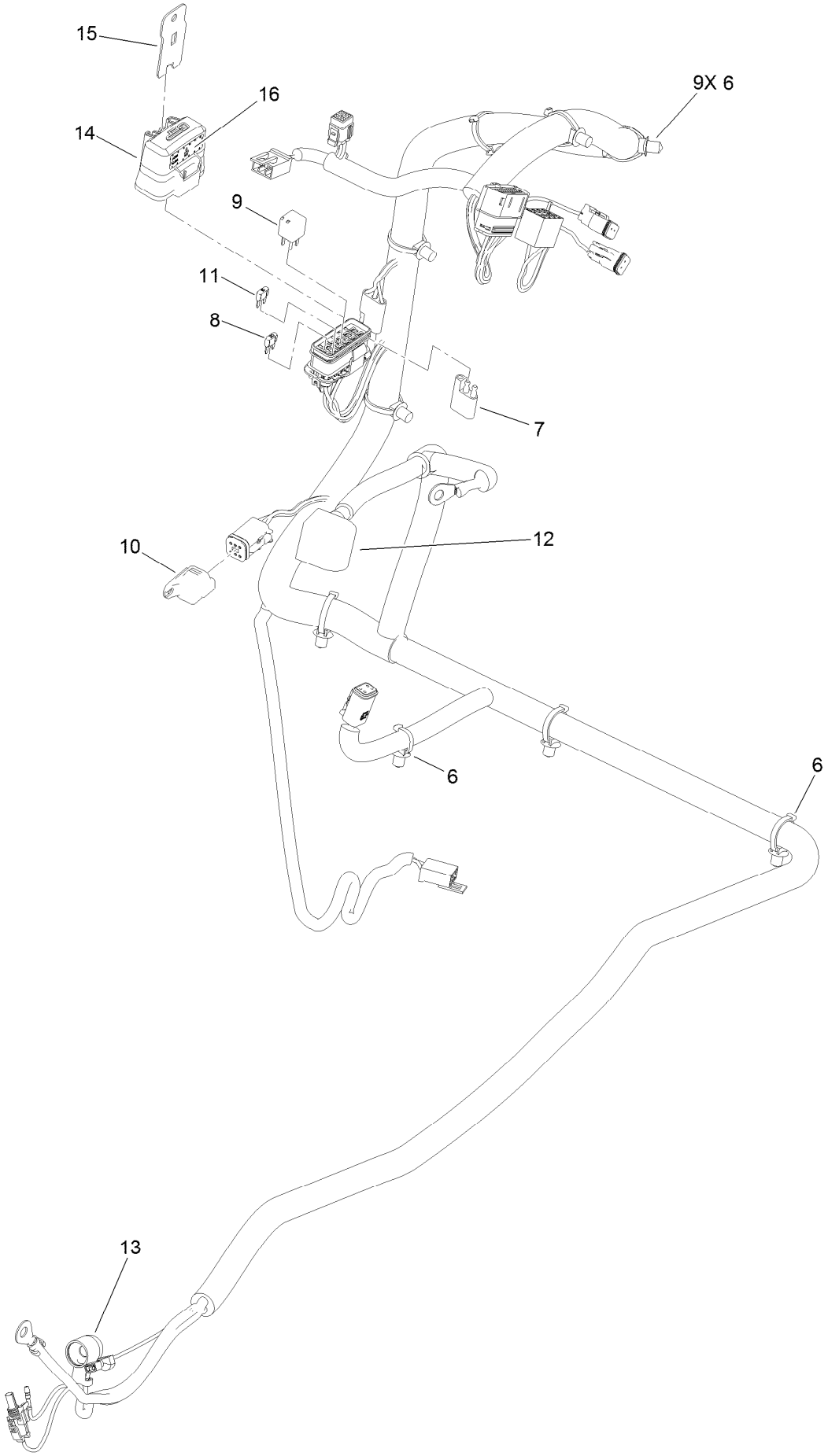

Wire Harness Assembly No. 126-9535 (continued)

Ref.	Part Number	Qty.	Description
6	32180-030	9	Clip-Tie
7	32180-197	1	Cap-Plug
8	121-8868	1	Fuse-Mini Blade, 20 Amp
9	126-3991	1	Relay-Micro
10	32180-156	1	Cap-Plug, 6 Way
11	121-8867	1	Fuse-Mini Blade, 15 Amp
12	126-8876	1	Insulator-Battery
13	1-543393	1	Insulator-Solenoid
14	32180-176	1	Cover-Block, Fuse
15	32180-177	1	Clip-Mounting
16	126-7875	1	Decal-Fuse

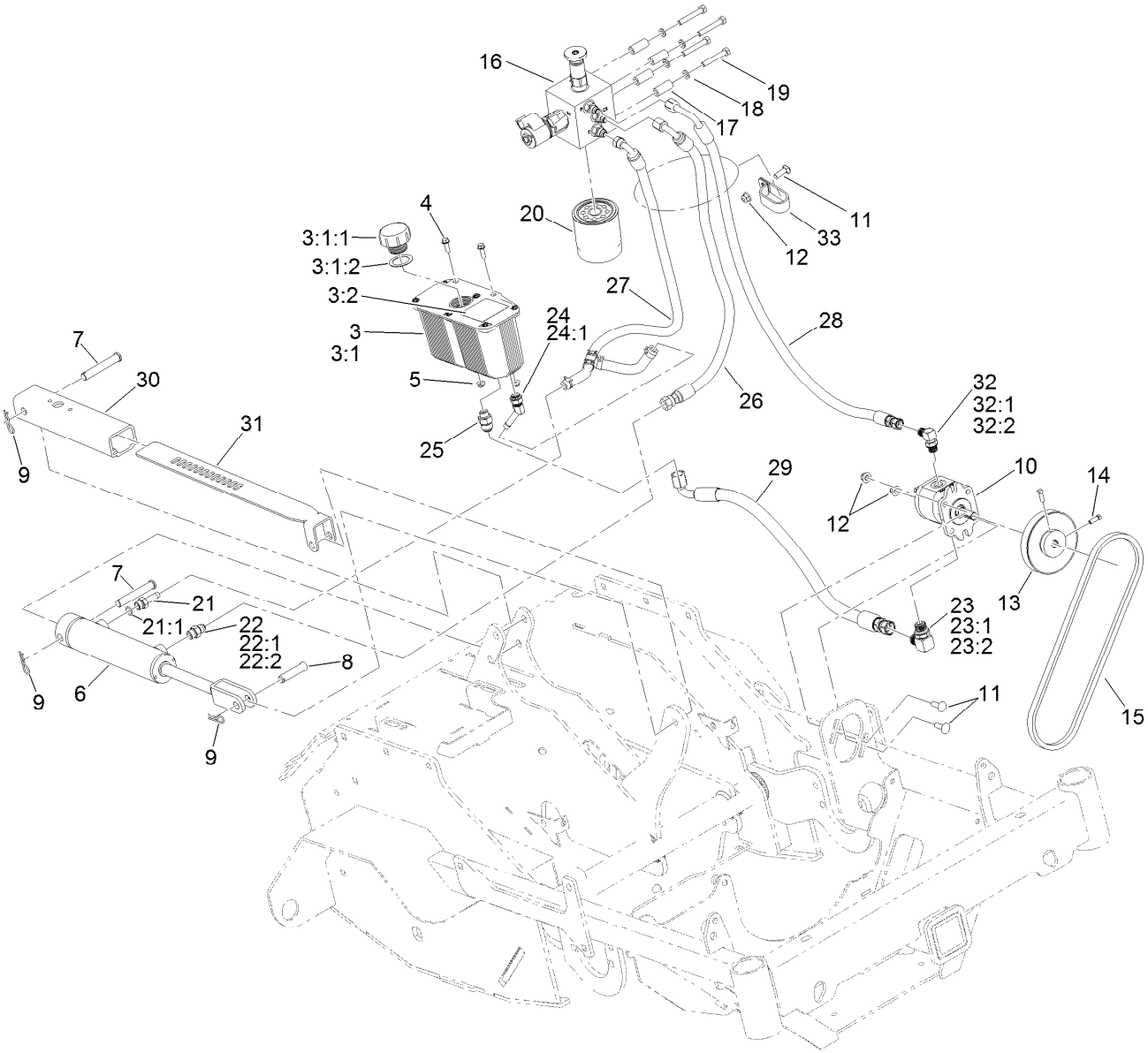

Auxiliary Hydraulic Assembly

Ref.	Part Number	Qty.	Description
3	116-2066	1	Reservoir ASM
3:1		1	Reservoir-HYD ●
3:1:1	103-1948	1	Cap-Reservoir, HYD
3:1:2	103-1949	1	Gasket-Cap
3:2	115-4212	1	Decal-Warning
4	32105-15	2	Screw-HWH
5	104-7201	2	Nut-HF
6	126-9861	1	Cylinder-Hydraulic
7	283-55	2	Pin-Clevis
8	42195	1	Pin-Clevis
9	3290-467	3	Pin-Hair
10	126-9796	1	Pump-Hydraulic
11	3230-22	3	Screw-CARR
12	104-8300	3	Nut-HF, NI
13	116-6667	1	Pulley
14	3241-6	2	Screw-SQH
15	126-9803	1	Belt-V
16	126-9321	1	Manifold ASM

Ref.	Part Number	Qty.	Description
17	103-0384	4	Spacer
18	3253-4	4	Washer-Lock
19	322-10	4	Screw-HH
20	1-633750	1	Filter-Oil, HYD
21	103-1912	1	Adapter-Straight
21:1	237-42	1	O-Ring
22	103-2156	1	Fitting-Straight
22:1	1-603921	1	O-Ring
22:2	103-1020	1	O-Ring
23	103-2153	1	Fitting-90 DEG
23:1	1-603920	1	O-Ring
23:2	1-603992	1	O-Ring
24	103-1807	1	Fitting-Barbed, 45 DEG
24:1	237-42	1	O-Ring
25	126-9952	1	Fitting-STR
26	126-9468	1	Hydraulic Hose ASM
27	126-9469	1	Hydraulic Hose ASM
28	126-9470	1	Hydraulic Hose ASM

● Not serviced separately

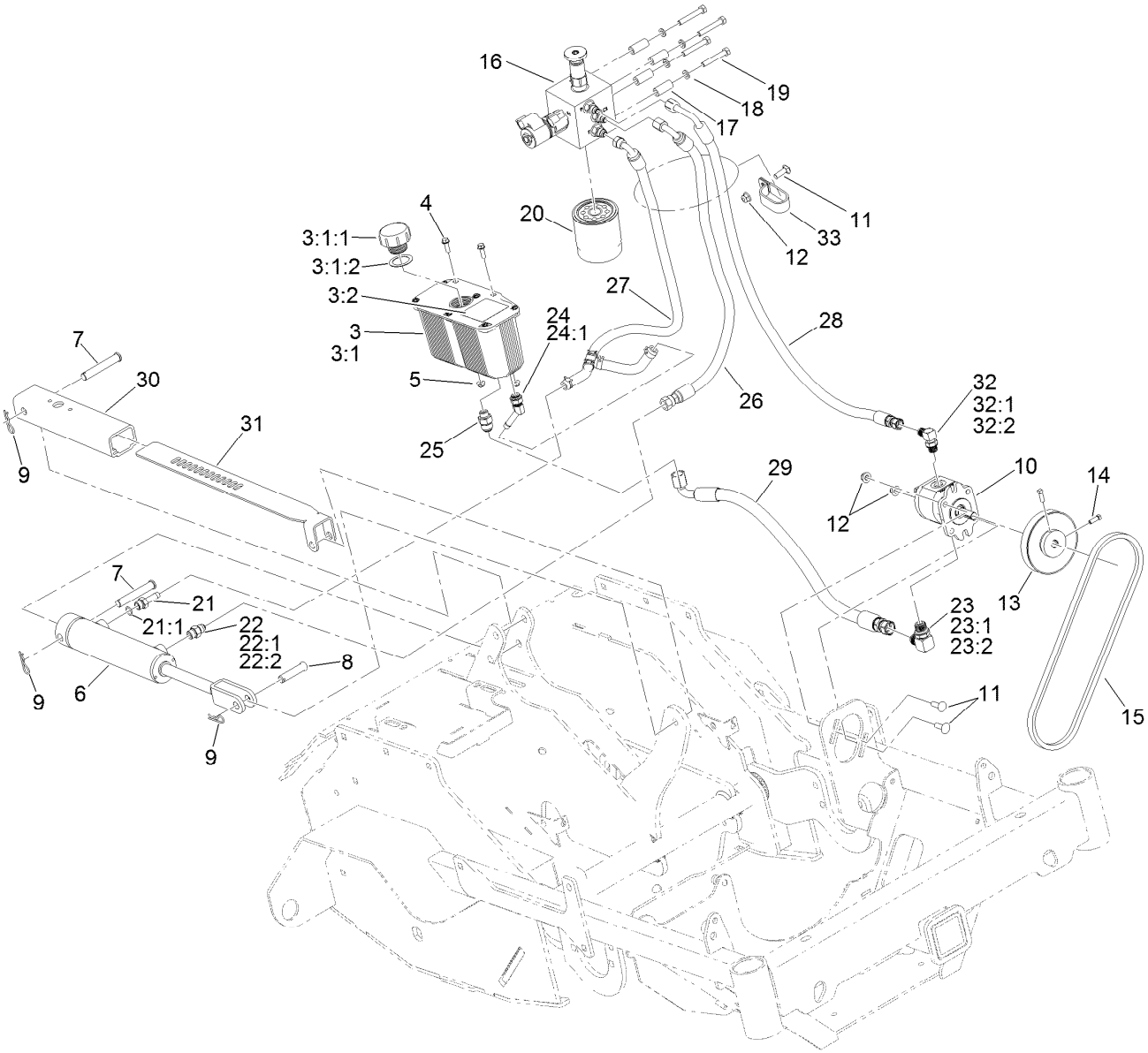

Auxiliary Hydraulic Assembly (continued)

Ref.	Part Number	Qty.	Description
29	126-9471	1	Hydraulic Hose ASM
30	135-1224	1	Housing-Depth Control
31	135-1385	1	Bracket-Depth Control
32	103-2155	1	Fitting-90 DEG

Ref.	Part Number	Qty.	Description
32:1	1-603921	1	O-Ring
32:2	103-1020	1	O-Ring
33	2412-137	1	Clamp-R, Double

● Not serviced separately

Manifold Assembly No. 126-9321

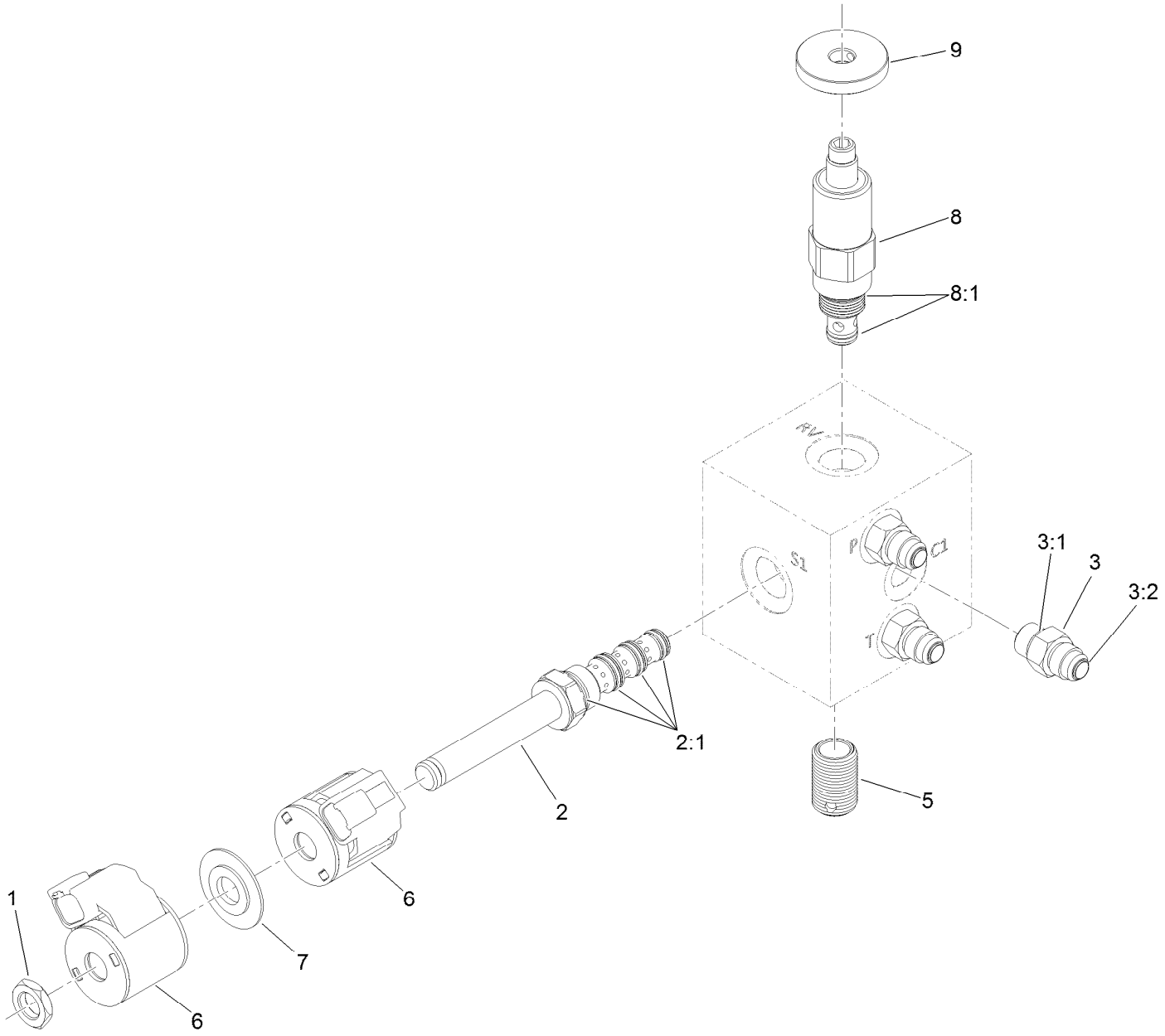

Manifold Assembly No. 126-9321 (continued)

Ref.	Part Number	Qty.	Description
1	110-2634	1	Nut-Coil
2	126-9379	1	Valve-Solenoid
2:1	112-6520	1	Seal Kit
3	103-2156	3	Fitting-Straight
3:1	1-603921	1	O-Ring
3:2	103-1020	1	O-Ring

Ref.	Part Number	Qty.	Description
5	127-3885	1	Nipple-Filter
6	112-0197	2	E Coil-12V Dc
7	120-2586	1	Spacer-Coil
8	135-1855	1	Valve-Relief, Poppet Type
8:1	126-9388	1	Seal Kit
9	116-9396	1	Knob (1.5 DIA)

Engine Assembly

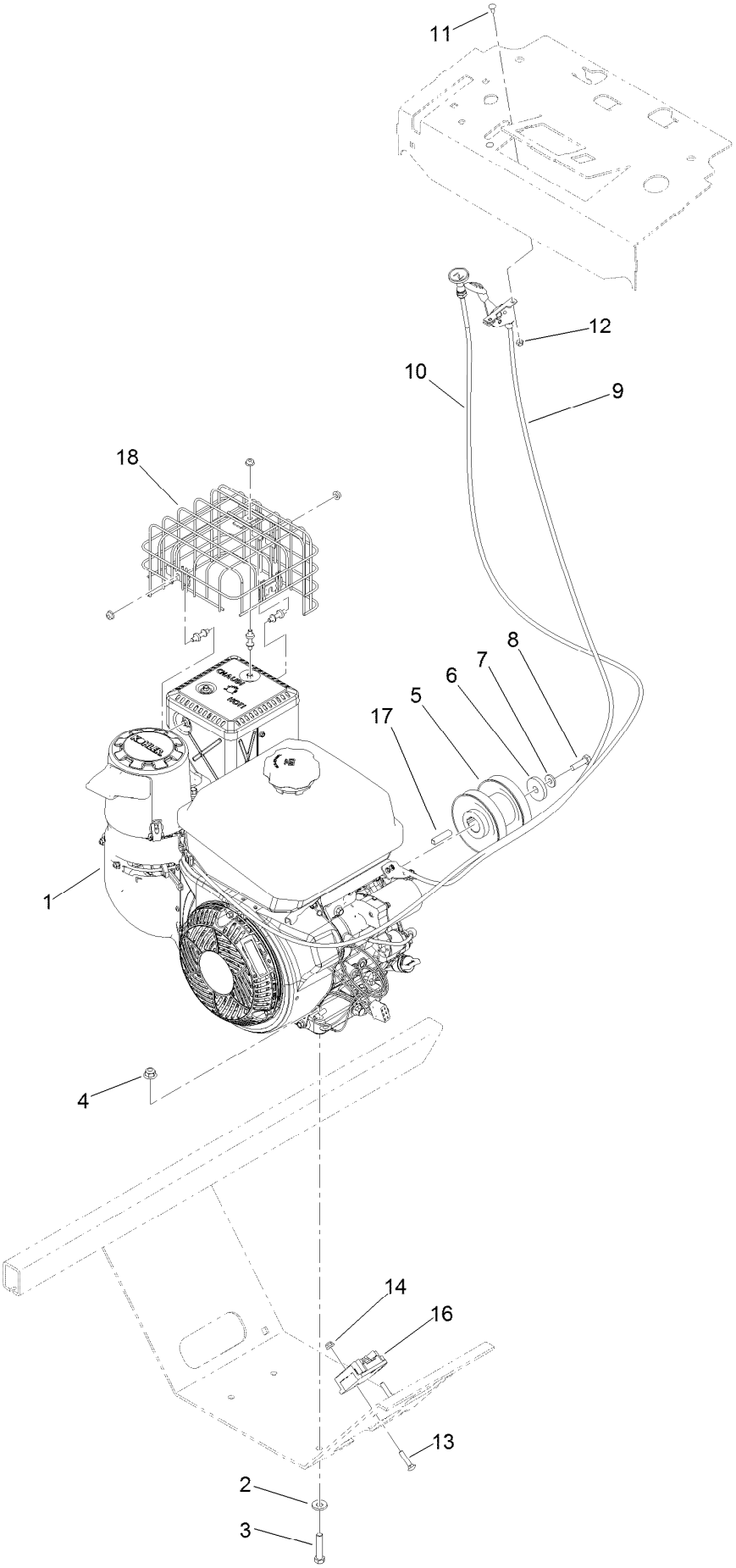

Engine Assembly (continued)

Ref.	Part Number	Qty.	Description
1	135-3981	1	Engine-Kohler, Ch440-3186
2	98-5975	4	Washer-Belleville
3	323-9	4	Screw-HH
4	104-8301	4	Nut-HF, NI
5	126-9142	1	Pulley
6	1-543610	1	Washer-Clutch
7	1-303334	1	Washer-Spring
8	33114-030	1	Screw-HH
9	109-3958	1	Control-Throttle
10	135-2133	1	Cable-Choke, Push/Pull
11	1-807513	2	Bolt-CARR
12	3296-2	2	Nut-Lock, NI
13	3229-3	2	Screw-CARR
14	104-7201	2	Nut-HF
16	126-9904	1	Regulator
17	135-3980	1	Key-Square, 7Mm
18	135-3366	1	Kit-Muffler Birdcage

Notes:

Notes:

TORO®

Count on it.