FORM NO. 3322–608

TORO®

MODEL NO. 07222 – 90001 & Up

OPERATOR'S MANUAL

# WORKMAN® 3310–D

## Liquid Cooled Diesel Heavy Industry Vehicle

**To ensure maximum safety, optimum performance, and to gain knowledge of the product, it is essential that you or any other operator of the machine read and understand the contents of this manual before the engine is ever started. Pay particular attention to the SAFETY INSTRUCTIONS highlighted by this symbol–**



**The safety alert symbol means CAUTION, WARNING or DANGER — personal safety instruction. Failure to comply with the instruction may result in personal injury or death.**




©The TORO Company – 1998

# FOREWORD

The TORO WORKMAN® was developed to provide an efficient, versatile, trouble free and economical work vehicle. The latest concepts of engineering, design and safety have been incorporated into this machine, along with the highest quality parts and workmanship. Excellent service will be derived if proper operation and maintenance practices are followed.

**WARNING**

**The WORKMAN® is an off−highway vehicle only, and is not designed, equipped, or manufactured for use on public streets, roads or highways.**

You know, since you have purchased the industry leader in maintenance excellence, that future performance and dependability are of prime importance. TORO also is concerned about future use of the machine and of safety to the user. Therefore, this manual must be read by you and those involved with the WORKMAN® to make sure that safety, proper set-up, operation and maintenance procedures are followed at all times. The major sections of the manual are:

**1. Safety Instructions**
**2. Set-Up Instructions**
**3. Before Operating**
**4. Operating Instructions**
**5. Maintenance**

Safety, mechanical and some general information in this manual are emphasized. **DANGER**, **WARNING** and **CAUTION** identify safety messages. Whenever the triangle safety symbol appears, it is followed by a safety message that must be read and understood. For more details concerning safety, read the safety instructions on pages 5−7. **IMPORTANT** identifies special mechanical information and **NOTE** identifies general information worthy of special attention.

**WARNING:**

**Diesel engine exhaust and some of its constituents are known to the State of California to cause cancer, birth defects, or other reproductive harm.**

# FOREWORD

The TORO WORKMAN® meets the requirements of ANSI B56.8a–1994.

Supervisors, operators and service persons should be familiar with the following standards and publications: (The material may be obtained from the address shown).

- Flammable and Combustible Liquids Code:
  ANSI/NFPA 30
- National Fire Protection Association:
  ANSI/NFPA #505; Powered Industrial Trucks
  ADDRESS:
  National Fire Prevention Association
  Barrymarch Park
  Quincy, Massachusetts 02269 U.S.A
- ANSI/ASME B56.8 Personal Burden Carriers
  ADDRESS:
  American National Standards Institute, Inc.
  1430 Broadway
  New York, New York 10018 U.S.A.
- ANSI/UL 558; Internal Combustion Engine Powered Industrial Trucks
  ADDRESS:
  American National Standards Institute, Inc.
  1430 Broadway
  New York, New York 10018 U.S.A.
  OR
  Underwriters Laboratories
  333 Pfingsten Road
  Northbrook, Illinois 60062 U.S.A.

## OPTIONAL SPARK ARRESTER

In some places a spark arrester muffler must be used because of local, state or federal regulations. The spark arrester, available from your local Toro Distributor is approved by the United States Department of Agriculture and the United States Forest Service.

**When the machine is used or operated on any California forest, brush or grass covered land, a properly operating spark arrester must be attached to the muffler. The operator is violating state law, Section 442 Public Resources Code if a spark arrester is not used.**

If help concerning set up, operation, maintenance or safety is ever needed, contact your local Authorized TORO Distributor. In addition to genuine TORO replacement parts, the distributor also has optional equipment for the complete line of TORO turf care equipment. Keep your TORO all TORO. Buy genuine TORO parts and accessories.

# TABLE OF CONTENTS


**SAFETY INSTRUCTIONS** . . . . . 5–7
**SAFETY AND INSTRUCTION DECALS** . . . . . 8–10
**SPECIFICATIONS** . . . . . 11
**LOOSE PARTS CHART** . . . . . 12
**SET–UP INSTRUCTIONS** . . . . . 13–14
- Install Wheels . . . . . 13
- Install Steering Wheel . . . . . 13
- Install Front Fenders . . . . . 13
- Install Seat Frame . . . . . 13
- Install Seat Back Cushions, Manual Tube and Bed Safety Support . . . . . 14
- Install ROPS . . . . . 14
- Activate and Charge Battery . . . . . 14

**BEFORE OPERATING** . . . . . 16–18
- Check Crankcase Oil . . . . . 16
- Fill Fuel Tank . . . . . 16
- Check Cooling System . . . . . 17
- Check Transaxle / Hydraulic Fluid . . . . . 17
- Check Torque Of Wheel Nuts . . . . . 18
- Check Brake Fluid . . . . . 18

**CONTROLS** . . . . . 19–20
**OPERATING INSTRUCTIONS** . . . . . 21–26
- Pre–Starting Checks . . . . . 21
- Starting Engine . . . . . 21
- Bleeding Fuel System . . . . . 21
- Driving Vehicle . . . . . 22
- Stopping Vehicle . . . . . 22
- Stopping Engine . . . . . 22
- New Vehicle Break–in . . . . . 22
- Check Interlock System . . . . . 22
- Operating Characteristics . . . . . 22
- Passengers . . . . . 23
- Speed . . . . . 23
- Turning . . . . . 23
- Braking . . . . . 23
- Tipovers . . . . . 24
- Hills . . . . . 25
- Loading And Dumping . . . . . 25
- Transporting Vehicle . . . . . 25
- Towing Vehicle . . . . . 26
- Trailer Towing . . . . . 26

**MAINTENANCE CHART AND CHECKLIST** . . . . . 27
**QUICK REFERENCE CHART** . . . . . 28
**LUBRICATION** . . . . . 28–29
**MAINTENANCE** . . . . . 30–38
- Jacking Vehicle . . . . . 30
- General Air Cleaner Maintenance . . . . . 30
- Servicing Air Cleaner . . . . . 31
- Changing Engine Oil And Filter . . . . . 31
- Fuel System . . . . . 31
- Bleeding Air From Injectors . . . . . 32
- Removing Debris From Cooling System . . . . . 33
- Changing Engine Coolant . . . . . 33
- Adjusting Belts . . . . . 33
- Adjusting Accelerator Pedal . . . . . 34
- Cylinder Head Bolts . . . . . 34
- Engine Valve Clearance . . . . . 34
- Changing Transaxle / Hydraulic Fluid . . . . . 34
- Replacing Hydraulic Filter . . . . . 35
- Cleaning Hydraulic Strainer . . . . . 35
- Adjusting Brake Pedal . . . . . 35
- Adjusting Clutch Pedal . . . . . 36
- Adjusting Parking Brake . . . . . 36
- Adjusting Shift Cables . . . . . 36
- Inspect Brakes . . . . . 37
- Inspect Tires . . . . . 37
- Front Wheel Toe–in . . . . . 37
- Fuses . . . . . 37
- Jump Starting Procedure . . . . . 37
- Battery Storage . . . . . 38
- Battery Care . . . . . 38

**MAINTENANCE SCHEDULE** . . . . . 39
**HYDRAULIC SCHEMATIC** . . . . . 40
**ELECTRICAL SCHEMATIC** . . . . . 41
**IDENTIFICATION AND ORDERING** . . . . . 43
- Model And Serial Numbers . . . . . 43

**WARRANTY** . . . . . BACK COVER

# SAFETY INSTRUCTIONS

**The WORKMAN® was designed and tested to offer safe service when operated and maintained properly. Although hazard control and accident prevention partially are dependent upon the design and configuration of the machine, these factors are also dependent upon the awareness, concern, and proper training of the personnel involved in the operation, maintenance and storage of the machine. Improper use or maintenance of the machine can result in injury or death.**

**This is a specialized utility vehicle designed for off−road use only. Its ride and handling will have a different feel than what drivers experience with passenger cars or trucks. So take time to become familiar with your WORKMAN®.**
**Not all of the attachments that adapt to the WORKMAN® are covered in this manual. See the specific Operator's Manual provided with attachment for additional safety instructions. READ THESE MANUALS.**

**TO REDUCE THE POTENTIAL FOR INJURY OR DEATH, COMPLY WITH THE FOLLOWING SAFETY INSTRUCTIONS.**

## SUPERVISOR'S RESPONSIBILITIES

**1.** Make sure operators are thoroughly trained and familiar with the Operator's Manual and all labels on the vehicle.

**2.** Be sure to establish your own special procedures and work rules for unusual operating conditions (e.g. slopes too steep for vehicle operation).

## BEFORE OPERATING

**3.** Operate the machine only after reading and understanding the contents of this manual. A replacement manual is available by sending complete model and serial number to:

The Toro Company
8111 Lyndale Avenue South
Bloomington, Minnesota 55420−1196.

**4.** Never allow children to operate the vehicle. Never allow adults to operate it without proper instructions. Only trained and authorized persons should operate this vehicle. Make sure all operators are physically and mentally capable of operating the vehicle. Anyone who operates the vehicle should have a motor vehicle license.

**5.** This vehicle is designed to carry only you, the operator, and one passenger in the seat provided by the manufacturer. Never carry any other passengers on the vehicle.

**6.** Never operate the vehicle when under the influence of drugs or alcohol.

**7.** Become familiar with the controls and know how to stop the engine quickly.

**8.** Keep all shields, safety devices and decals in place. If a shield, safety device or decal is malfunctioning, illegible, or damaged, repair or replace it before operating the machine.

**9.** Always wear substantial shoes. Do not operate machine while wearing sandals, tennis shoes or sneakers. Do not wear loose fitting clothing or jewelry which could get caught in moving parts and cause personal injury.

**10.** Wearing safety glasses, safety shoes, long pants and a helmet is advisable and required by some local safety and insurance regulations.

**11.** Keep everyone, especially children and pets, away from the areas of operation.

**12.** Before operating the vehicle, always check all parts of the vehicle and any attachments. If something is wrong, stop using vehicle. Make sure problem is corrected before vehicle or attachment is operated again.

**13.** Since diesel fuel is highly flammable, handle it carefully.

**A.** Use an approved fuel container.

**B.** Do not remove cap from fuel tank when engine is hot or running.

**C.** Do not smoke while handling fuel.

**D.** Fill fuel tank outdoors and to about one inch below top of tank (bottom of filler neck). Do not overfill.

**E.** Wipe up any spilled fuel.

**14.** Check the safety interlock system daily for proper operation; refer to page 25. If a switch should malfunction, replace the switch before operating machine. After every two years, replace the interlock switches in the safety system, whether they are working properly or not.

## WHILE OPERATING

**15.** Operator and passenger should remain seated whenever the vehicle is in motion. Operator should keep both hands on steering wheel, whenever possible and passenger should use hand holds provided. Keep arms and legs within the vehicle body at all times. Never carry passengers in box or on attachments. Remember your passenger may not be expecting you to brake or turn and may not be ready.

**16.** Never overload your vehicle. Name plate (located under dash on passenger side) shows load limits for vehicle. Never overfill attachments or exceed the vehicle maximum GVW.

# SAFETY INSTRUCTIONS

**17.** When starting the engine:

**A.** Sit on operator's seat and engage parking brake.

**B.** Disengage any attachments and return hand throttle lever to OFF position (if so equipped).

**C.** Move shift lever to NEUTRAL and depress clutch pedal.

**D.** Keep foot off accelerator pedal.

**E.** Turn ignition key to ON, hold glow plug switch ON. (Maximum 30 seconds)

**F.** Turn ignition key to START.

**18.** Using the machine demands attention. Failure to operate vehicle safely may result in a accident, tip over of vehicle and serious injury or death. Drive carefully. To prevent tipping or loss of control:

**A.** Use extreme caution, reduce speed and maintain a safe distance around indoor obstacles, ditches, creeks, ramps, any unfamiliar areas or other hazards.

**B.** Watch for holes or other hidden hazards.

**C.** Use caution when operating vehicle on a steep slope. Normally travel straight up and down slopes. Reduce speed when making sharp turns or when turning on hillsides. Avoid turning on hillsides whenever possible.

**D.** Use extra caution when operating vehicle on wet surfaces, at higher speeds or with a full load. Stopping time will increase with a full load. Shift into a lower gear before starting up or down a hill.

**E.** When loading bed, distribute load evenly. Use extra caution if the load exceeds the dimensions of the vehicle/bed. Operate vehicle with extra caution when handling off−center loads that cannot be centered. Keep loads balanced and secure to prevent them from shifting.

**F.** Avoid sudden stops and starts. Do not go from reverse to forward or forward to reverse without first coming to a complete stop.

**G.** Do not attempt sharp turns or abrupt maneuvers or other unsafe driving actions that may cause a loss of vehicle control.

**H.** When dumping, do not let anyone stand behind vehicle and do not dump load on any one's feet. Release tailgate latches from side of box, not from behind.

**I.** Before backing up, look to the rear and assure no one is behind. Back up slowly.

**J.** Watch out for traffic when near or crossing roads. Always yield the right of way to pedestrians and other vehicles. This vehicle is <u>not</u> designed for use on streets or highways. Always signal your turns or stop early enough so other persons know what you plan to do. Obey all traffic rules and regulations.

**K.** Never operate vehicle in or near an area where there is dust or fumes in the air which are explosive. The electrical and exhaust systems of the vehicle can produce sparks capable of igniting explosive materials.

**L.** Always watch out for and avoid low over hangs such as tree limbs, door jambs, over head walkways, etc. Make sure there is enough room over head to easily clear the vehicle and your head.

**M.** If ever unsure about safe operation, STOP WORK and ask your supervisor.

**19.** Do not touch engine, transaxle, radiator, muffler or muffler shield while engine is running or soon after it has stopped because these areas may be hot enough to cause burns.

**20.** If the machine ever vibrates abnormally, stop immediately, turn engine off, wait for all motion to stop and inspect for damage. Repair all damage before commencing operation.

**21.** Before getting off the seat:

**A.** Stop movement of the machine.

**B.** Lower bed.

**C**. Shut engine off and wait for all movement to stop.

**D.** Set parking brake.

**E.** Remove key from ignition.

**F.** Block wheels if machine is on an incline.

## MAINTENANCE

**22.** Before servicing or making adjustments to the machine, stop engine, set parking brake and remove key from ignition to prevent accidental starting of the engine.

**23.** Never work under a raised bed without placing a bed safety support under bed to keep bed in raised position.

**24.** Make sure all hydraulic line connectors are tight, and all hydraulic hoses and lines are in good condition before applying pressure to the system.

**25.** Keep body and hands away from pin hole leaks or nozzles that eject hydraulic fluid under high pressure. Use paper or cardboard, not hands, to search for leaks. Hydraulic fluid escaping under pressure can have sufficient force to penetrate skin and do serious damage. If fluid is injected into the skin it must be surgically removed within a few hours by a doctor familiar with this form of injury or gangrene may result.

# SAFETY INSTRUCTIONS

**26.** Before disconnecting or performing any work on the hydraulic system, all pressure in system must be relieved by stopping engine.

**27.** To make sure entire machine is in good condition, keep all nuts, bolts and screws properly tightened.

**28.** To reduce potential fire hazard, keep the engine area free of excessive grease, grass, leaves and accumulation of dirt.

**29.** If the engine must be running to perform a maintenance adjustment, keep hands, feet, clothing, and any parts of the body away from the engine and any moving parts. Keep everyone away.

**30.** Do not overspeed engine by changing governor settings. Maximum engine speed is 3650 rpm. To assure safety and accuracy, have an Authorized TORO Distributor check maximum engine speed with a tachometer.

**31.** If major repairs are ever needed or assistance is required, contact an Authorized TORO Distributor.

**32.** To be sure of optimum performance and safety, always purchase genuine TORO replacement parts and accessories. Replacement parts and accessories made by other manufacturers could be dangerous. Altering this vehicle in any manner may affect the vehicle's operation, performance, durability or its use may result in injury or death. Such use could void the product warranty of The TORO Company.

**33.** This vehicle should not be modified without the TORO Company's authorization. Direct any inquiries to:

The TORO Company
Commercial Division
Vehicle Engineering Dept.
300 West 82nd St.
Bloomington, Minnesota 55420−1196 USA

## SOUND PRESSURE LEVEL

This unit, when operating at 3600 RPM, has an equivalent continuous A-weighted sound pressure at the operator ear of 85 dB(A), based on measurements of identical machines per Directive 84/538/EEC and amendments.

## VIBRATION LEVEL

### Hand-Arm

This unit does not exceed a vibration level of 2.5 $m/s^2$, at the hands based on measurements of identical machines per ISO 5349 procedures.

## WHOLE BODY

This unit does not exceed a vibration level of .5 $m/s^2$ at the posterior based on measurements of identical machines per ISO 2631 procedures.

# SAFETY AND INSTRUCTION DECALS

**The following safety and instruction decals are installed on the machine. If any become damaged or illegible, replace them. Decal part numbers are listed below and in the parts catalog. Order replacements from your Authorized TORO Distributor.**

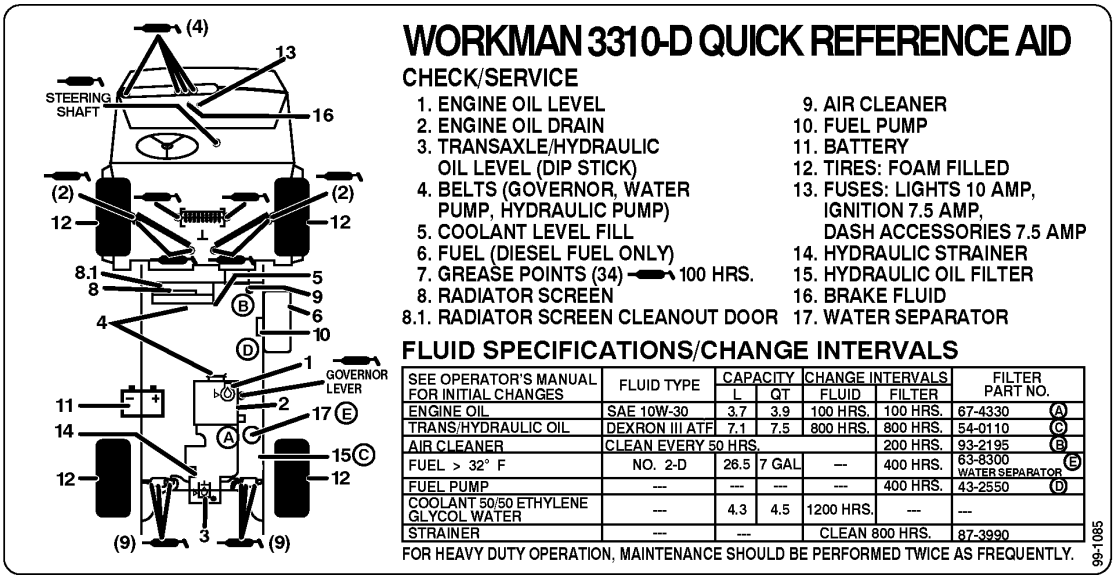


**ON REAR SKIRT**
**(Part No. 99−1085)**

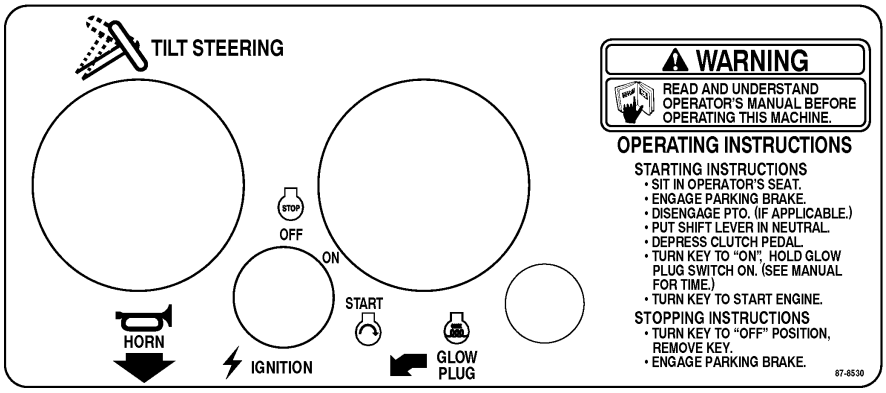


**ON DASH**
**(Part No. 87−8530)**

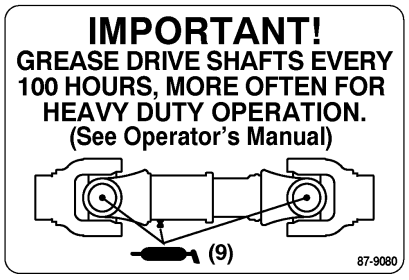


**ON REAR AXLE TUBE**
**(Part No. 87−9080)**




**ON FAN SHROUD**
**(Part No. 76−8750)**

# SAFETY AND INSTRUCTION DECALS

| OPTIONAL FUSE BLOCK | OPTIONAL FUSE BLOCK | STANDARD FUSE BLOCK |
|---|---|---|
| | | OPEN |
| | | LIGHTS 15 AMP |
| | | DASH 7.5 AMP |
| | | IGNITION 7.5 AMP |

87-6670

**UNDER DASH NEXT TO FUSE BLOCK (Part No. 87–6670)**

**DANGER**

FAILURE TO COMPLY WITH THE FOLLOWING SAFETY REQUIREMENTS MAY RESULT IN PERSONAL INJURY OR DEATH.
READ AND UNDERSTAND OPERATORS MANUAL BEFORE OPERATING THIS MACHINE. VEHICLE IS FOR OFF ROAD USE ONLY.
LOS OPERADORES DEBEN ESTAR MUY BIEN CAPACITADOS EN UNA OPERACION SEGURA.

•TO AVOID TIPOVER:
- USE EXTREME CAUTION ON HILLS, SLOPES, AND ROUGH TERRAIN.
- REDUCE SPEED AND DISENGAGE DIFFERENTIAL LOCK WHEN TURNING.
- AVOID SUDDEN SHARP TURNS, STARTS AND STOPS. AVOID HOLES, DROP OFFS, OR HIDDEN HAZARDS IN TERRAIN.
- REDUCE SPEED WITH HEAVIER LOADS.

- OPERATOR MUST BE SKILLED AND TRAINED IN SAFE OPERATION.
- OPERATOR AND PASSENGER (MAXIMUM ONE) MUST REMAIN SEATED AND KEEP ARMS AND LEGS WITHIN VEHICLE BODY.
- NO ADDITIONAL PASSENGERS IN BOX OR ON ATTACHMENTS.
- KEEP BYSTANDERS AND PETS AWAY FROM MACHINE.
- STOP ENGINE BEFORE ADDING FUEL OR SERVICING MACHINE.
- CHECK OPERATION OF ALL INTERLOCKS, BRAKES AND ACCELERATOR DAILY. KEEP ALL SAFETY DEVICES IN PLACE.
- MAXIMUM ENGINE SPEED IS 3650 RPM. DO NOT EXCEED.

87-5920

**ON SKIRT (Part No. 87–5920)**

**WARNING**

**THIS ARM IS SPRING LOADED!**
**SEE OPERATORS MANUAL FOR DISASSEMBLY PROCEDURE**

**ON SPRING CRADLE (Part No. 44–0760)**

**DO NOT STEP**

**ON BATTERY COVER (Part No. 36–3400)**

**WARNING**

THE WORKMAN® IS AN OFF-HIGHWAY VEHICLE, AND IS NOT DESIGNED, EQUIPPED, OR MANUFACTURED FOR USE ON PUBLIC STREETS, ROADS OR HIGHWAYS.

94-5272

**ON DASH (Part No. 94–5272)**

**CAUTION**

DO NOT USE STARTING FLUID

83-9150

**IN FRONT OF RADIATOR (Part No. 83–9150)**

**WARNING**
**HOT SURFACES**

**ON LEFT FRAME RAIL (Part No. 66–6840)**

**WARNING**
**ROTATING MEMBERS**

80-8040

**ON FAN SUPPORT (Part No. 80–8040)**

APPROXIMATE OPERATING WEIGHT 1400 LBS.
RATED CAPACITY 2600 LBS.
GVW 4000 LBS MAXIMUM
RATED CAPACITY SHOWN ABOVE MAY VARY WITH TIRE TYPE, TIRE PRESSURE, AND ATTACHMENT CONFIGURATION.
(REFER TO OPERATORS MANUAL FOR DETAILS.)

FM APPROVED

THIS UNIT COMPLIES WITH ANSI B56.8a - 1994 - TYPE D

87-9500

**UNDER RIGHT SIDE OF DASH (Part No. 87–9500)**

# SAFETY AND INSTRUCTION DECALS

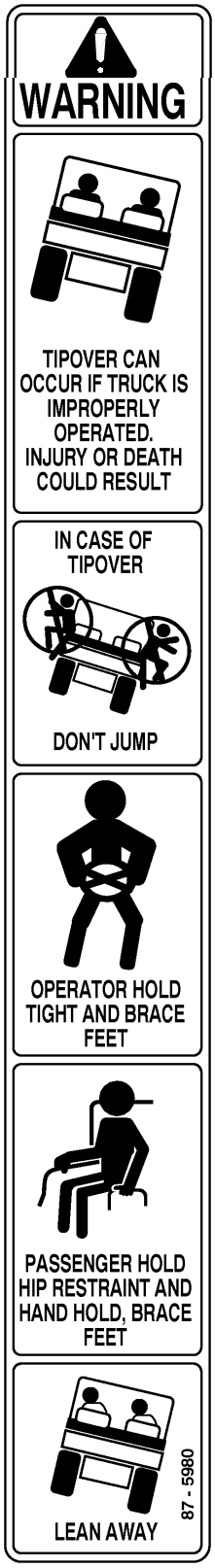


**ON ROPS**
**(Part No. 87−5980)**

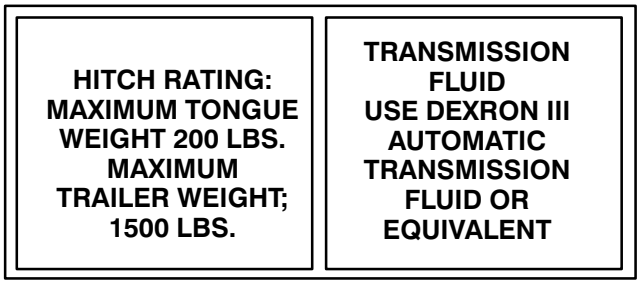


**ON AXLE TUBE**
**(Part No. 87−6060)**

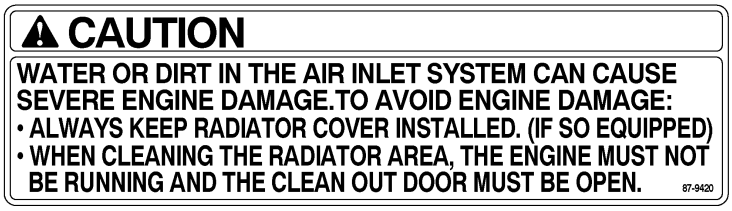


**IN FRONT OF RADIATOR**
**(Part No. 87−9420)**




**ON CONSOLE**
**(Part No. 87−6020)**

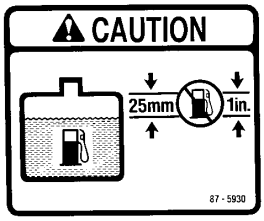


**ON SKIRT**
**(Part No. 87−5930)**




**ON ROPS**
**(Part No. 87−5940)**

# SPECIFICATIONS

**Type:** 4 wheel step through, out front operator style, two person vehicle. Certified to meet ANSI Specifications B56.8a–1994.

**Engine:** Mitsubishi three cylinder, liquid cooled, counterbalanced, diesel engine. Rated at 23 hp, governed to a maximum speed of 3650 rpm by a mechanical governor. 58 cu. in. (952 cc) displacement. Forced lubrication by gear pump. 12 volt electric starter. Spin–on oil filter.

**Air Cleaner:** Heavy duty, 2-stage, remote mounted air cleaner.

**Battery:** 12 volt with 650 cold cranking Amps @ 0 degrees F.

**Cooling System:** Mid mounted radiator with removable screen and lower clean out access. Cooling system capacity is approximately 4 qts. of 50/50 mixture of ethylene glycol anti–freeze.

**Fuel System:** Fuel tank capacity is 7 gallons. 12 volt electric (transistor type) fuel pump with replaceable filter. Replaceable fuel filter/water separator with 3 micron filtration.

**Transmission:** Rear transaxle configuration, twin axle drive. 3 speed synchromesh, H–shift pattern with high–low range providing 6 forward and 2 reverse speeds. Manual engage differential lock. 4 wheel drive output shaft (4 wd only).

**Clutch:** 7.5" clutch and pressure plate.

**Frame:** Welded, high strength steel channels and tubes.

**Front Suspension:** Independent "A" frame control arm, dual coil springs and dual shock absorbers with anti–sway bar.

**Rear Suspension:** DeDion axle (weight carrying axle is independent of transaxle), leaf spring and dual shock absorbers.

**Steering System:** Power assist, 3 position tilt steering wheel, 3–3/4 turns lock–to–lock. 17.5 to 1 ratio, 14" diameter steering wheel.

**Tires**: Front tires: 20.5" x 8"-10, 4-ply rating, foam filled.
Rear tires: 23" x 10.5"-12, 4-ply rating, foam filled.

**Brakes:** 4 wheel hydraulic, dual safety circuit self adjusting drum: 7" diameter front and 8" diameter rear. Hand actuated parking brake actuates rear brake shoes.

**ROPS:** 2 post roll over protection structure with shoulder restraint.

**Hydraulics:** 4 GPM pressure balanced gear pump provides hydraulic flow for power steering. Transaxle is used for reservoir for hydraulic system. 8 quart total capacity. Spin–on 10 micron hydraulic oil filter. 100 mesh strainer in transaxle. The optional, remote hydraulic control kit supplies "live" hydraulic power from the vehicle pump whenever the engine is running.

**Seat:** Twin molded cushions and backrests, with shoulder and hip restraints.

**Controls:** Foot operated accelerator, clutch and brake pedals. Hand operated shifter, parking brake, and tilt steering levers. Ignition switch, light switch, glow plug switch, and horn button.

**Gauges:** Hour meter, fuel gauge, coolant temperature gauge. Warning light cluster includes engine low oil pressure, charge indicator and glow indicator. Tachometer optional.

**Lights:** Twin halogen headlights and single taillight. Rear stop light.

**Interlocks:** Clutch pedal must be depressed to start engine. Low oil or high engine temperature will shut down engine after a time delay.

**Ground Speed (3600 RPM):**
**Forward Speeds –** 7.2/10.9 mph
**Reverse Speeds –** 6.8 mph

**General Specifications (approx.):**

| | |
|---|---|
| Base Weight: | Dry w/o flatbed 1800lbs |
| Rated Capacity: | *2,200 lbs. |
| | *includes 200 lb. operator and 200 lb. passenger and loaded attachment. |
| Maximum. Gross Vehicle Weight: | 4,000 lbs. |
| Tow Capacity | Tongue weight 200 lbs. |
| | Maximum trailer weight 1,500 lbs. |
| Overall Width: | 63" |
| Overall Length: | 124.5"w/o bed |
| Height: | 75" to top of ROPS |
| Ground Clearance: | 7" w/ no load |
| Wheel Base: | 70" |
| Wheel Tread: (center line to center line) | 46" Front |
| | 49.7" Rear |
| | (47.7" Rear w/optional 23" rear Tire) |

**Specifications and design subject to change without notice.**

# LOOSE PARTS CHART

**Note:** Use this chart as a checklist to assure all parts necessary for assembly have been received. Without these parts, total set-up cannot be completed. Some parts may have already been assembled at factory.

| DESCRIPTION | QTY. | USE |
|---|---|---|
| Wheel Nut<br>Wheel−Front<br>Wheel Nut<br>Wheel−Rear | 10<br>2<br>10<br>2 | Mount wheels. |
| Steering wheel<br>Foam Seal<br>Washer<br>Nut<br>Cap | 1<br>1<br>1<br>1<br>1 | Install steering wheel |
| Fenders−Front<br>Phillips Screw 10−24<br>Washer<br>Locknut 10−24 | 2<br>14<br>14<br>14 | Install front fenders |
| Seat Frame<br>Seat Frame Bracket<br>Carriage Bolts 3/8−16 x 3/4” lg.<br>Flange Locknut 3/8−16<br>Capscrew 1/2−13 x 1” lg.<br>Locknut 1/2−13<br>Capscrew 3/8−16 x 1” lg.<br>Lockwasher 3/8−16 | 1<br>2<br>4<br>4<br>2<br>2<br>2<br>2 | Install seat frame |
| Seat Back Cushion<br>Seat Back Bracket<br>Capscrew 1/4−20 x 3/4” lg.<br>Washer 1/4”<br>Carriage Bolts 5/16−18 x 5/8” lg.<br>Flange Locknuts 5/16−18<br>Manual Tube<br>R−Clamp | 2<br>4<br>8<br>8<br>8<br>8<br>1<br>2 | Install seat back cushion and manual tube |
| ROPS<br>Capscrew 1/2−13 x 3” lg.<br>Locknuts 1/2−13 | 1<br>4<br>4 | Mount ROPS |
| Operator’s Manual (Vehicle)<br>Parts Catalog | 2<br>1 | Read before operating machine. |
| Registration Card | 1 | Fill out and return to Toro |

# SET−UP INSTRUCTIONS

## INSTALL WHEELS (Fig. 1)

**1.** Remove and discard fasteners securing wheels.

**2.** Mount wheels and torque nuts to 45-55 ft-lb.

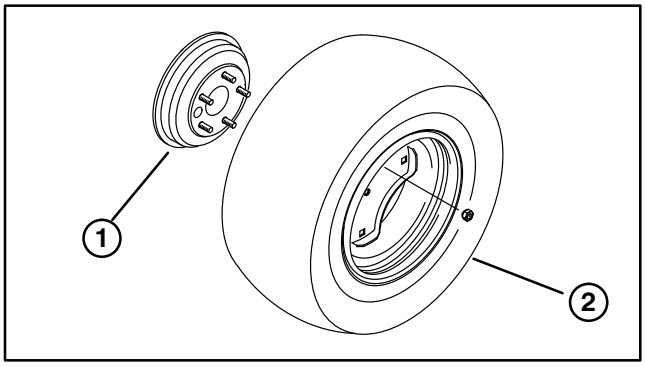


**Figure 1**
1. **Wheel**
2. **Wheel Nut**

## INSTALL STEERING WHEEL (Fig. 2)

**1.** Remove jam nut from steering shaft. Slide foam seal, steering wheel and washer onto steering shaft.

**2.** Secure steering wheel to shaft with jam nut and tighten it to 10−15 ft-lb.

**3.** Install cap to steering wheel.

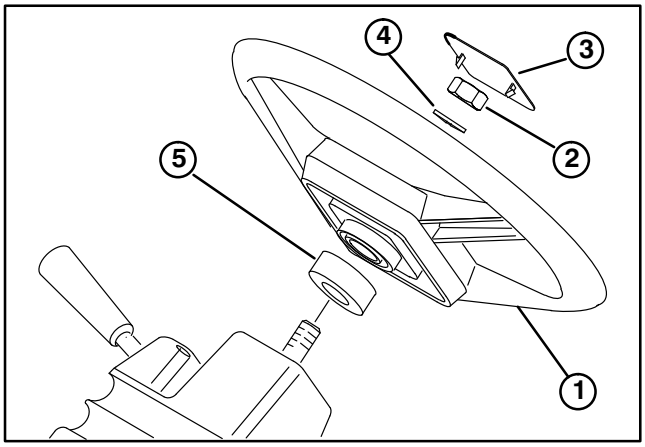


**Figure 2**
1. **Steering Wheel**
2. **Jam Nut**
3. **Cap**
4. **Washer**
5. **Foam Seal**

## INSTALL FRONT FENDERS (Fig. 3)

**1.** Mount a fender to each side of skirt with (7) 10−24 Phillips screws, flat washers and locknuts.

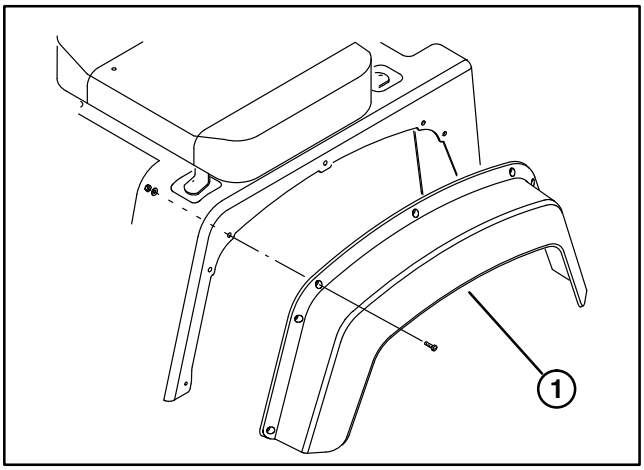


**Figure 3**
1. **Fender**

## INSTALL SEAT FRAME (Fig. 4)

**1.** Mount a seat frame bracket to each end of seat frame with (2) 3/8−16 x 3/4" carriage bolts and flange locknuts.

**2.** Position seat frame on vehicle, aligning mounting holes in frame with holes in vehicle.

**3.** Secure front legs of seat frame to sides of vehicle floor with (2) 1/2−13 x 1" lg. capscrews and locknuts.

**4.** Secure bottom of each seat frame bracket to vehicle frame with a 3/8−16 x 1" capscrew and lockwasher.

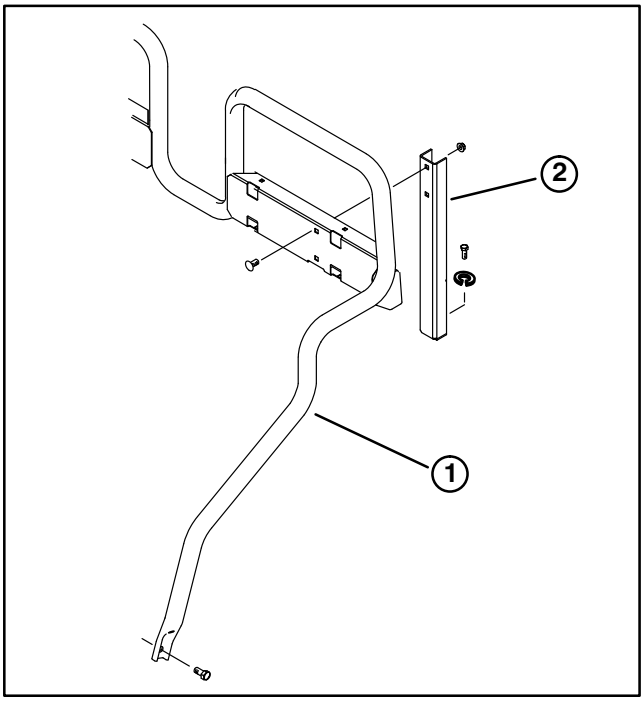


**Figure 4**
1. **Seat frame**
2. **Seat frame bracket**

# SET−UP INSTRUCTIONS

## INSTALL SEAT BACK CUSHIONS, MANUAL TUBE AND BED SUPPORT (Fig. 5 − 6)

**1.** Mount (2) seat back brackets to each seat back cushion with (4) 1/4−20 x 3/4" lg. capscrews and 1/4" flat washers. Position brackets on seat back cushions as shown in figure 5.

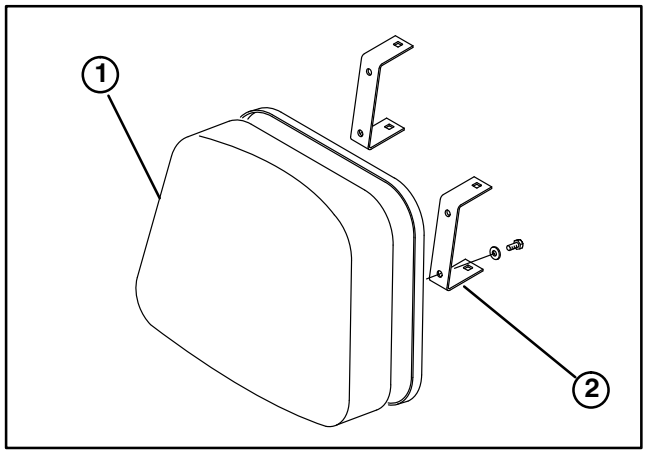


**Figure 5**
1. **Cushion seat back**
2. **Seat back bracket**

**2.** Mount cushion with seat back brackets to right side of seat back with (4) 5/16−18 x 5/8" lg. carriage bolts and flange locknuts.

**3.** Slide manual tube into (2) R−clamps.

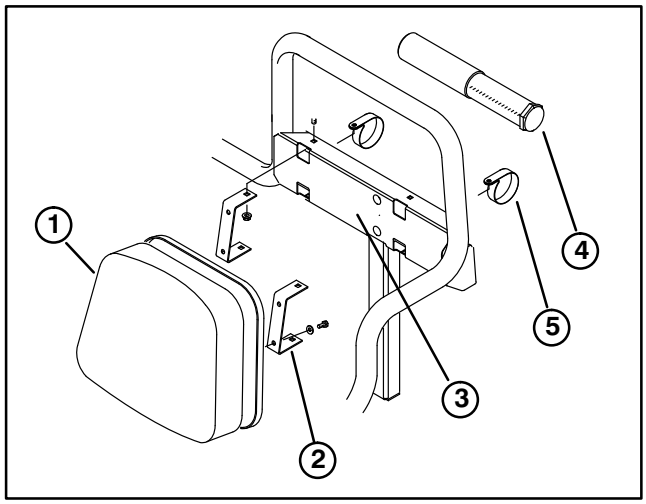


**Figure 6**
1. **Cushion seat back**
2. **Seat back bracket**
3. **Seat back**
4. **Manual tube**
5. **R−clamp**

**4.** Mount cushion with seat back brackets and manual tube R−clamps to left seat back with (4) 5/16−18 x 5/8" lg. carriage bolts and flange locknuts.

## INSTALL ROPS (Fig. 7)

**1.** Insert each side of ROPS into mounting bracket on each side of vehicle frame, positioning ROPS as shown in figure 7.

**2.** Secure each side of ROPS to mounting brackets with (2) 1/2−13 x 3" lg. capscrews and locknuts.

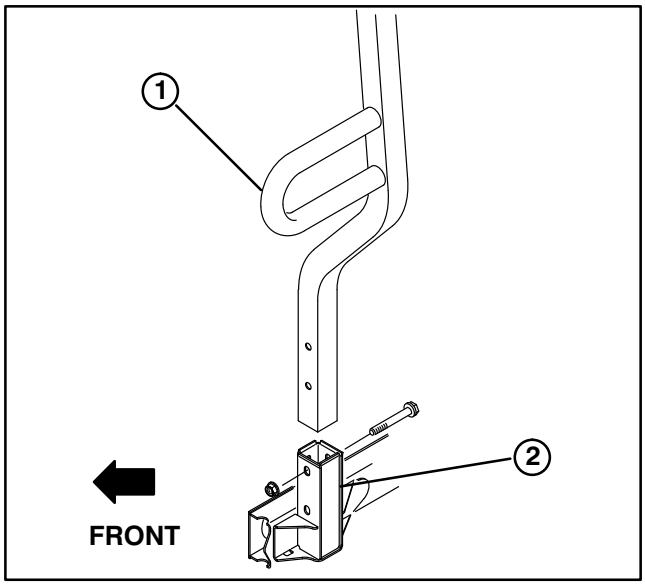


**Figure 7**
1. **ROPS**
2. **Mounting brackets**

## ACTIVATE AND CHARGE BATTERY (Fig. 8 & 9)

If Battery is not filled with electrolyte or activated, it must be removed from vehicle, filled with electrolyte and charged. Bulk electrolyte with 1.260 specific gravity can be purchased from a local battery supply outlet.

**1.** Loosen knobs securing battery cover to battery base and slide cover off.

**2.** Remove capscrew, washers and locknut securing battery hold down to battery base. Remove hold down and slide battery out of battery base.

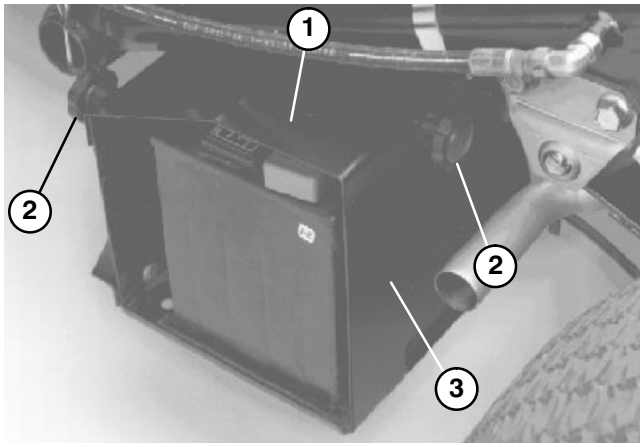


**Figure 8**
1. **Battery cover**
2. **Knob**
3. **Battery base**

# SET–UP INSTRUCTIONS

## CAUTION

**Electrolyte gases are explosive and can cause serious injury to eyes, lungs and skin. Wear safety goggles and rubber gloves when working with electrolyte or battery. Charge the battery in a well ventilated place so gasses produced while charging can dissipate. Since the gases are explosive, keep open flames and electrical spark away from the battery; do not smoke. Nausea may result if the gases are inhaled. Unplug charger from electrical outlet before connecting to or disconnecting charger leads from battery posts.**

**3.** Remove filler caps from battery and slowly fill each cell until electrolyte is just above the plates.

**4.** Replace filler caps and connect a 3 to 4 amp battery charger to the battery posts. Charge the battery at a rate of 3 to 4 amperes for 4 to 8 hours.

**5.** When battery is charged, disconnect charger from electrical outlet and battery posts.

**6.** Remove filler caps. Slowly add electrolyte to each cell until level is up to fill ring. Install filler caps.

**IMPORTANT**: **Do not overfill battery. Electrolyte will overflow onto other parts of the vehicle and severe corrosion and deterioration will result.**

**7.** Slide battery into battery base so battery terminals are toward the rear of the vehicle.

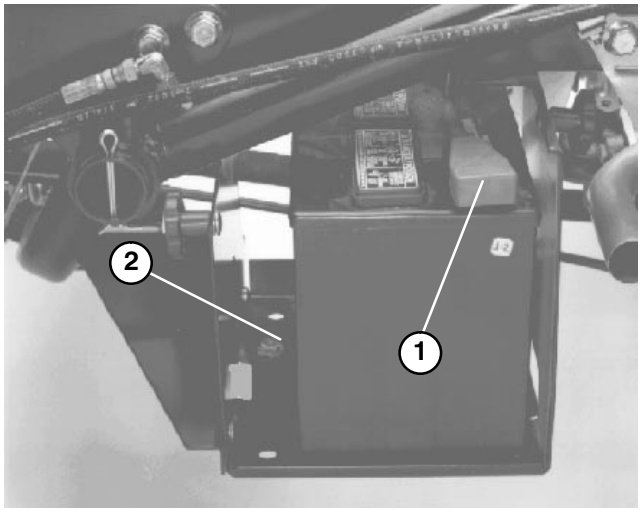


**Figure 9**

1. **Positive (+) cable**
2. **Hold down**

**8.** Install the positive cable (red) to the positive (+) terminal and the negative cable (black) to the negative (—) terminal of the battery and secure with capscrews and nuts. Slide the rubber boot over the positive terminal to prevent possible short–out from occurring.

## WARNING

**Connecting cables to the wrong post could result in personal injury and/or damage to the electrical system. Make sure battery or cables do not interfere or rub on any moving or hot parts.**

**9.** Install battery hold down and secure to base with capscrew, washers and locknut.

**10.** Reinstall battery cover to battery base and tighten knobs.

## CAUTION

**Before servicing or making adjustments to the machine, stop engine, set parking brake and remove key from the switch. Any load material must be removed from bed or other attachment before working under raised bed. Always place the safety support on extended lift cylinder to hold box up.**

### CHECK CRANKCASE OIL (Fig. 10–11)

The engine is shipped with approximately 3.8 quarts (w/ filter) of oil in the crankcase; however, level of oil must be checked before and after the engine is first started.

**1.** Position machine on a level surface.

**2.** Remove dipstick and wipe it with a clean rag. Insert dipstick into tube and make sure it is seated fully. Remove dipstick and check level of oil. If oil level is low, remove filler cap and add enough oil to raise level to FULL mark on dipstick.

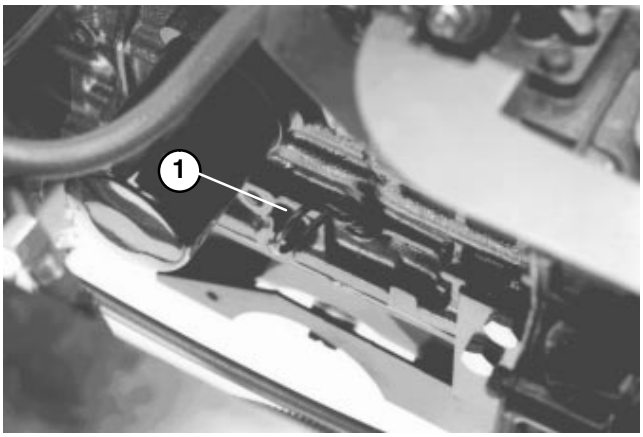


**Figure 10**
**1. Dipstick**

**3.** The engine uses any high-quality 10W30 detergent oil having the American Petroleum Institute -API- "service classification" CD, CE, CF or CF–4.

**4.** Pour oil into fill opening until the oil level is up to the "FULL" mark on the dipstick. Add the oil slowly and check the level often during this process. DO NOT OVERFILL.

**Note:** If level of oil is at the ADD mark on the dipstick, add 1 pint (0.47 l) of oil and recheck level. Do not overfill.

**IMPORTANT: Check level of oil every 8 operating hours or daily. Change oil and filter initially after the first 50 hours of operation, thereafter, change oil and filter every 100 hours. However, change oil more frequently when engine is operated in extremely dusty or dirty conditions.**

**5.** Install the dipstick firmly in place.

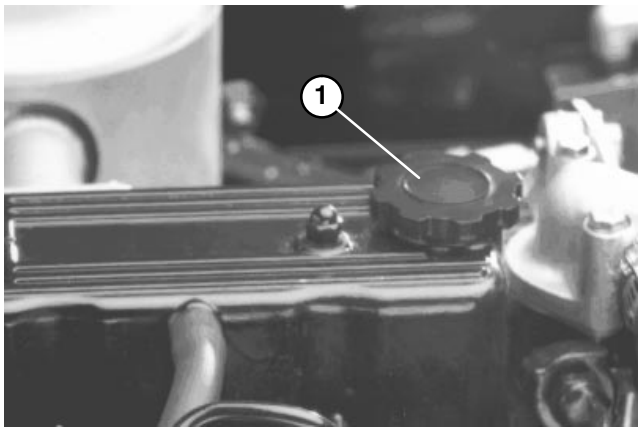


**Figure 11**
**1. Filler cap**

### FILL FUEL TANK (Fig. 12)

Fuel tank capacity is approximately 7 gallons.

The engine runs on No. 2–D or 1–D automotive type diesel fuel with a minimum cetane rating of 40.

**Note:** Higher cetane rated fuel may be required if machine is to be used at high altitudes and low-atmospheric temperatures.

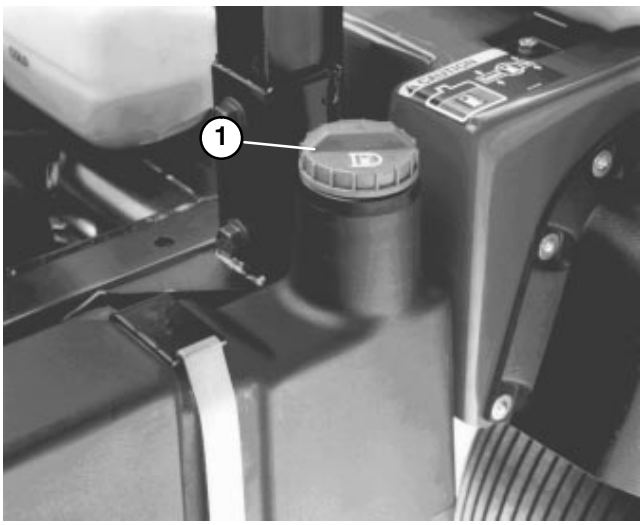


**Figure 12**
**1. Fuel tank cap**

**1.** Clean area around fuel tank cap.

**2.** Remove fuel tank cap.

**3.** Fill tank to about one inch below top of tank, (bottom of filler neck) with diesel fuel. **DO NOT OVERFILL.** Then install cap.

**4.** Wipe up any fuel that may have spilled to prevent a fire hazard.

**DANGER**

**Because diesel fuel is flammable, caution must be used when storing or handling it. Do not fill fuel tank while engine is running, hot, or when machine is in an enclosed area. Vapors may build up and be ignited by a spark or flame source many feet away. DO NOT SMOKE while filling the fuel tank to prevent the possibility of an explosion. Always fill fuel tank outside and wipe up any spilled diesel fuel before starting engine. Use a funnel or spout to prevent spilling diesel fuel and fill tank to about 1 inch (25 mm) below the filler neck. Store diesel fuel in a clean, safety-approved container and keep the cap in place on the container Keep diesel fuel in a cool, well-ventilated place; never in an enclosed area such as a hot storage shed. To assure volatility and to prevent contamination, do not buy more than a 6 month supply.**

## CHECK COOLING SYSTEM (Fig. 13)

Capacity of cooling system is approximately 4 qts.

The cooling system is filled with a 50/50 solution of water and permanent ethylene glycol anti−freeze. Check level of coolant at beginning of each day before starting the engine.

**1.** Park machine on a level surface.

**CAUTION**

**If engine has been running, pressurized hot coolant can escape if radiator cap is removed and cause burns. Allow engine to cool at least 15 minutes or until the radiator cap is cool enough to touch without burning hand.**

**2.** Check coolant level. Coolant should be up to COLD line on reserve tank, when engine is cold.

**3.** If coolant is low, remove reserve tank cap and add a 50/50 mixture of water and permanent ethylene glycol anti−freeze. **DO NOT OVERFILL**.

**4.** Install reserve tank cap.

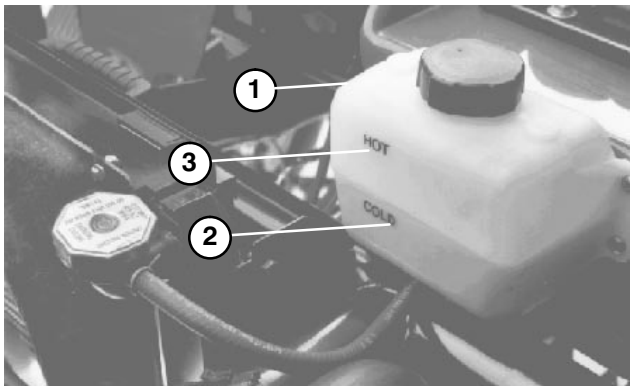


**Figure 13**
1. Reserve tank
2. Cold line
3. Hot line

## CHECK TRANSAXLE / HYDRAULIC FLUID (Fig. 14)

The transaxle reservoir is filled with Dexron III ATF. Check level before engine is first started and every 8 hours or daily, thereafter. Capacity of system is 7.5 qt.

**1.** Position the vehicle on a level surface.

**2.** Clean area around dipstick.

**3.** Unscrew dipstick from top of transaxle and wipe it with a clean rag.

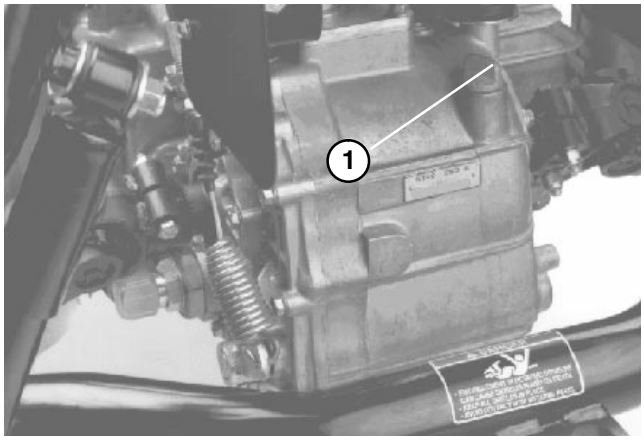


**Figure 14**
1. Dipstick

**4.** Screw dipstick into transaxle and make sure it is seated fully. Unscrew dipstick and check fluid level. Fluid should be up to top of flat portion of dipstick. If level is low, add enough fluid to achieve the proper level.

# BEFORE OPERATING

## CHECK TORQUE OF WHEEL NUTS

**WARNING**

**Failure to maintain proper torque could result in failure or loss of wheel and may result in personal injury. Torque front and rear wheel nuts to 45-65 ft −lb after 1-4 hours of operation and again after 10 hours of operation and every 200 hours thereafter.**

**IMPORTANT:** When replacing vehicle tires, only use replacements approved for the Workman. Use of tires not approved may cause turf damage or accelerated drive train damage.

## CHECK BRAKE FLUID (Fig. 15)

The brake fluid reservoir is shipped from the factory filled with “DOT 3” brake fluid. Check level before engine is first started and every 8 hours or daily, thereafter.

1. Park machine on a level surface.
2. Fluid level should be up to FULL line on reservoir.
3. If fluid level is low, clean area around cap, remove reservoir cap and fill to proper level. **DO NOT OVERFILL**.

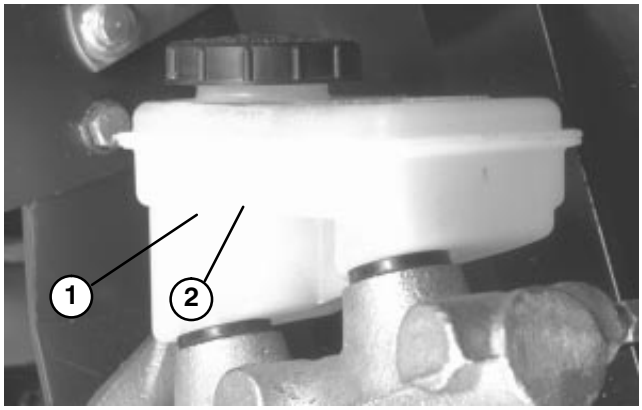


**Figure 15**
1. **Brake fluid reservoir**
2. **Full line**

# CONTROLS

**Accelerator Pedal** (Fig. 16) – The accelerator pedal gives the operator the ability to vary engine and ground speed of the vehicle, when the transmission is in gear. Depressing the pedal increases engine RPM and ground speed. Releasing pedal will decrease engine RPM and ground speed of the machine.

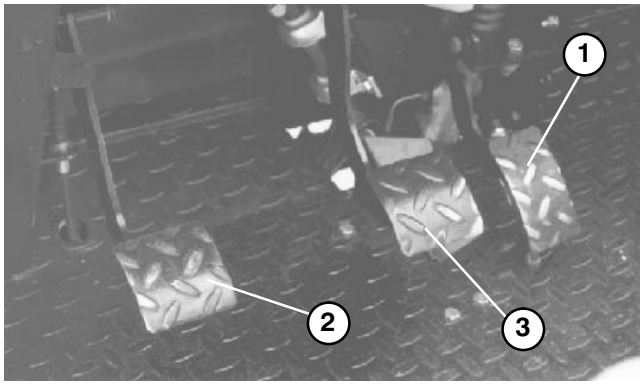


**Figure 16**
1. **Accelerator pedal**
2. **Clutch pedal**
3. **Brake pedal**

**Clutch Pedal** (Fig. 16) –The clutch pedal must be fully depressed to disengage clutch when starting engine or shifting transmission gears. Release pedal smoothly when transmission is in gear to prevent unnecessary wear on transmission and other related parts.

**IMPORTANT: Do not ride clutch pedal during operation. Clutch pedal must be fully out or clutch will slip causing friction and wear. Never hold the vehicle stopped on a hill using the clutch pedal. Damage to the clutch may occur.**

**Brake Pedal** (Fig. 16)) –The brake pedal is used to apply service brakes to stop or slow vehicle.

**CAUTION**

**Worn or misadjusted brakes may result in personal injury. If brake pedal travels to within 1–1/2" of the vehicle floor board, the brakes must be adjusted or repaired.**

**Gear Shift Lever** (Fig. 17) – Fully depress clutch pedal and move shift lever into desired gear selection. A diagram of the shift pattern is indicated below.

## Shift Pattern

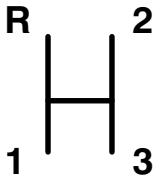


**IMPORTANT: Do not shift the transaxle to the reverse or forward gear unless the vehicle is standing still. Damage to transaxle may occur.**

**CAUTION**

**Down shifting from too high a speed can cause the rear wheels to skid resulting in loss of vehicle control as well as clutch and/or transmission damage. Shift smoothly to avoid grinding gears.**

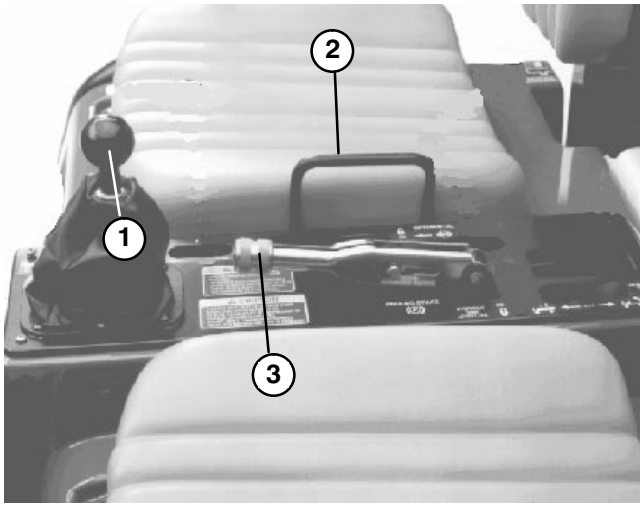


**Figure 17**
1. **Gear shift lever**
2. **Passenger hand hold**
3. **Parking brake**

**Parking Brake** (Fig. 17) –Whenever the engine is shut off, the parking brake must be engaged to prevent accidental movement of the vehicle. To engage the parking brake, pull back on lever. To disengage, push lever forward. Make sure parking brake is released before moving vehicle. If vehicle is parked on a steep grade, make sure parking brake is applied. Also, shift the transmission into 1st gear on a uphill grade or reverse on a down hill grade. Place chocks at the down hill side of wheels.

**Passenger Hand Hold** (Fig. 17) – Left side of passenger seat.

**Engine High–Temperature Shutdown** – The engine will shutdown if the engine coolant temperature increases above safe levels. Turn the key off and check the cooling system.

**Lights** – Headlights will turn on after the engine starts, and will turn off when engine is shut down.

**Tilt Steering Lever** (Fig. 18) – Lever on right side of console allows steering wheel to be adjusted for operator comfort.

**Coolant Temperature Gauge** (Fig. 18) – Registers coolant temperature in engine. Operates only when ignition switch is in On position.

# CONTROLS

**Horn Button** (Fig. 18) – Pressing button activates horn.

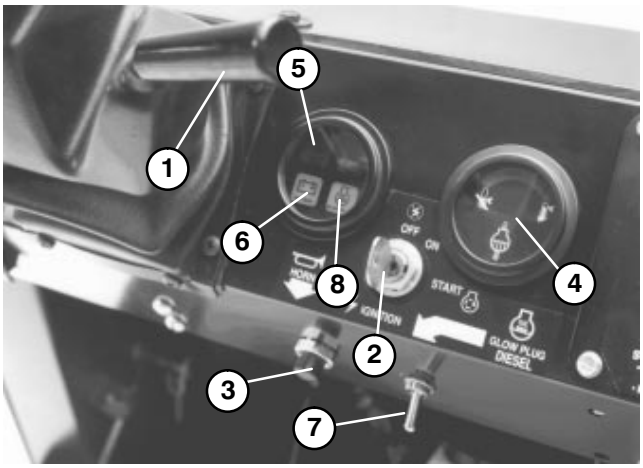


**Figure 18**

1. **Tilt steering lever**
2. **Ignition switch**
3. **Horn button**
4. **Coolant temp. gauge**
5. **Engine low oil pressure light**
6. **Charge indicator**
7. **Glow plug switch**
8. **Glow plug indicator light**

**Engine Low Oil Pressure Light** (Fig. 18) – The light glows and the engine will shut down if the oil pressure drops below safe levels. Turn the key off and check the oil level. If the oil level was low, but adding oil does not cause the light to go out within 4 seconds, do not operate the vehicle and contact your local Toro distributor for assistance.

**IMPORTANT: Do not operate vehicle until repair is complete. Failure to observe this precaution may result in damage to the engine.**

**Glow Plug Switch and Indicator** (Fig. 18) — Use to preheat engine cylinders prior to cold engine starting procedures — cylinders are preheated automatically during warm engine start operation. For cold starting, push switch lever upward and hold while watching indicator. Indicator will glow orange when the glow plugs are activated. Length of time necessary to preheat cylinders should be determined by atmospheric temperature; refer to Starting /Stopping Engine.

**Ignition Switch** (Fig. 18) –The ignition switch, used to start and stop the engine, has three positions: OFF, ON / Preheat and START. Rotate key clockwise — START position — to engage starter motor. Release key when engine starts. The key will move automatically to the ON position. To shut engine off, rotate key counterclockwise to OFF position.

**Charge Indicator** (Fig. 18) – Illuminates when battery is being discharged. If light illuminates during operation, stop vehicle, turn Off engine and check for possible causes, such as alternator belt.

**IMPORTANT: If alternator belt is loose or broken, do not operate vehicle until adjustment or repair is complete. Failure to observe this precaution may result in damage to the engine.**

**To check operation of warning lights:**

**1.** Apply parking brake.

**2.** Turn ignition key to “ON”, but do not start engine. The charge indicator and oil pressure lights should glow. If any light does not function, either a bulb is burned out or there is a malfunction in the system which must be repaired.

**Note:** High water temperature function on warning light cluster is not used.

**Hour Meter** (Fig. 19) – Indicates the total hours of machine operation. The hour meter starts to function whenever the key switch is rotated to “ON” position.

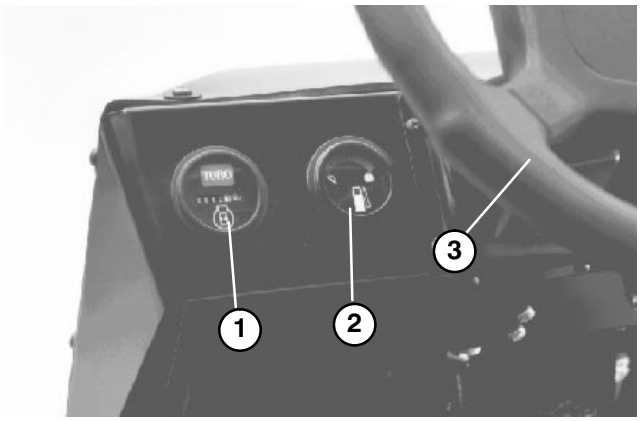


**Figure 19**

1. **Hour meter**
2. **Fuel gauge**
3. **Steering wheel**

**Fuel Gauge** (Fig.19) – Shows amount of fuel in tank. Operates only when ignition switch is in “ON” position.

**Steering Wheel** (Fig. 19) – Turns vehicle. If engine stalls or power assist fails due to a malfunction, vehicle steering will require greater effort.

# OPERATING INSTRUCTIONS

## PRE−STARTING CHECKS

Safe operation begins before taking the vehicle out for a day's work. You should check these items each time:

**1.** Check all fluid levels and add the appropriate amount of Toro specified fluids, if any are found to be low.

**2.** Check brake pedal operation.

**3.** Check to see that the horn is working.

**4.** Turn steering wheel to the left and right to check steering response.

**5.** Check for oil leaks, loose parts and any other noticeable malfunctions. Make sure engine is off and all moving parts have stopped before checking for oil leaks, loose parts and other malfunctions.

If any of the above items are not correct, notify your mechanic or check with your supervisor before taking the vehicle out for the day. Your supervisor may want you to check other items on a daily basis, so ask what your responsibilities are.

## STARTING ENGINE

**IMPORTANT: The fuel system must be bled if any of the following situations have occurred.**

**A. Initial start up of a new machine.**

**B. Engine has ceased running due to lack of fuel.**

**C. Maintenance has been performed upon fuel system components; i.e., filter replaced, separator serviced, etc.**

**Refer to Bleeding The Fuel System.**

**1.** Sit on operator's seat and engage parking brake.

**2.** Move shift lever to NEUTRAL position and depress clutch pedal.

**3.** Keep foot off accelerator pedal.

**4** When temperature is below 15°C (60°F), push glow plug switch upward to ON position (Fig. 18) and hold for suggested interval.

**Note:** Do not exceed 30 seconds of continuous use or glow plug may burn out prematurely.

**Note:** Refer to chart indicating approximate preheat time suggested in various temperature ranges.

| Temperature | Preheat time (sec) |
|---|---|
| Above 5°C (41°F) | 10 |
| +5°C (41°F) to −5°C (23°F) | 20 |
| Below −5°C (23°F) | 30 |

**5.** Insert key into ignition switch and rotate it clockwise to start the engine. Release key when engine starts.

**Note:** Do not run starter motor more than 20 seconds at a time or premature starter failure may result. If engine fails to start after 20 seconds, turn key to OFF position, recheck controls and procedures, wait 10 additional seconds and repeat starter operation.

**6.** Ensure that the lights are on.

## BLEEDING FUEL SYSTEM

**1.** Loosen air bleed screw on top of fuel filter/water separator (Fig. 20).

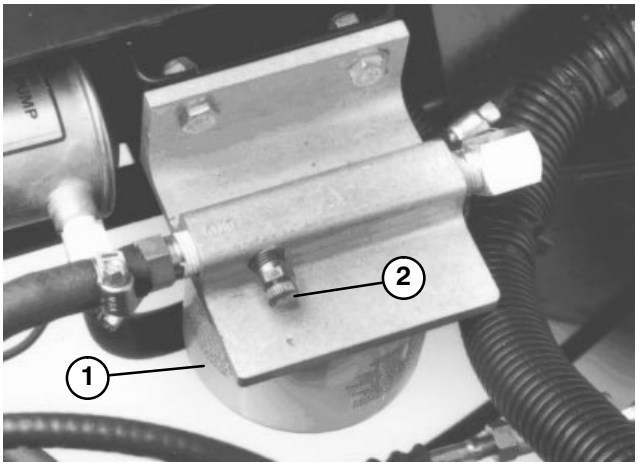


**Figure 20**

1. Fuel filter/water separator
2. Air bleeder screw

**3.** Turn key in ignition switch to the ON position. Electric fuel pump will begin operation, thereby forcing air out around air bleed screw. Leave key in ON position until solid stream of fuel flows out around screw. Tighten screw and turn key to OFF.

**4.** Open the air bleeder screw on the fuel injection pump (Fig. 21) with a 10 mm wrench.

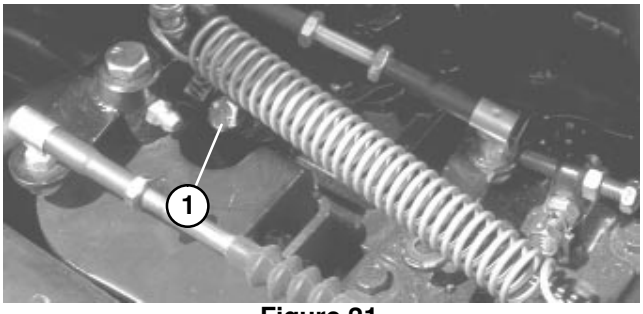


**Figure 21**

1. Fuel injection pump bleeder

**5.** Turn key in ignition switch to the ON position. Electric fuel pump will begin operation, thereby forcing air out around air bleed screw on fuel injection pump. Leave key in ON position until solid stream of fuel flows out around the screw. Tighten screw and turn key to OFF.

# OPERATING INSTRUCTIONS

**Note: Normally, engine should start after above bleeding procedures are followed. However, if engine does not start, air may be trapped between injection pump and injectors; refer to Bleeding Air From Injectors.**

## DRIVING VEHICLE

**1.** Release parking brake.

**2.** Fully depress clutch pedal.

**3.** Move gear shift lever to 1st gear.

**4.** Release clutch pedal smoothly while depressing accelerator pedal.

**5.** When vehicle gains enough speed, remove foot from accelerator pedal, fully depress clutch pedal, move gear shift lever to next gear and release clutch pedal while depressing accelerator pedal. Repeat procedure until desired speed is attained. Stop vehicle before shifting to reverse and forward.

**Note:** Avoid long periods of engine idling.

**Note:** Leaving ignition switch in "ON" position for long periods of time without running engine will discharge battery.

**IMPORTANT: Do not hold front wheels turned against the right or left stops for longer than 5 seconds. The hydraulic pump may over heat, resulting in pump or steering gear damage.**

**6.** Do not attempt to push or tow vehicle to get it started. Damage to drive train could result.

## STOPPING VEHICLE

**1.** To stop machine, remove foot from accelerator pedal, depress clutch pedal, then depress brake pedal.

## STOPPING ENGINE

**1.** To stop engine, rotate ignition key to OFF and engage parking brake. Remove key from switch to prevent accidental starting.

## NEW VEHICLE BREAK−IN

Your Workman vehicle is ready for work. To provide proper performance and long vehicle life, follow these guidelines for the first 100 operating hours.

- Check the fluid and engine oil levels regularly and be alert for indications of overheating in any component of the vehicle.

- After starting a cold engine, let it warm up for about 15 seconds before shifting into gear.

- Avoid racing the engine.
- To assure optimum performance of the brake system, burnish (break−in) the brakes before use. To burnish brakes: Operate the vehicle at full speed for 3 minutes, apply the brakes for 30 seconds while engaging the traction pedal. Repeat these steps 20 to 30 times. To verify the brakes are completely burnished remove a rear tire and inspect the brake drum for residue. The residue color should be light grey to almost white color.

- Vary vehicle speeds during operation. Avoid excessive idling. Avoid fast starts and quick stops.

- A break−in oil for engine is not required. Original engine oil is the same type specified for regular oil changes.

- Refer to Maintenance section of Operator's Manual for any special low hour checks.

## CHECK INTERLOCK SYSTEM

The purpose of the interlock system is to prevent the engine from cranking or starting unless the clutch pedal is depressed.

**CAUTION**

**The interlock switches are for the operator's protection, so do not bypass them. Check operation of the switches daily to assure interlock system is operating. If a switch is malfunctioning replace it before operating. Regardless whether switches are operating properly or not, replace them every two years to assure maximum safety. Do not rely entirely on safety switches − use common sense!**

**To verify clutch interlock switch operation:**

**1.** Sit on operator's seat and engage parking brake. Move shift lever to NEUTRAL position.

**2.** Without depressing clutch pedal, rotate key clockwise to start position.

**3.** If engine cranks or starts, there is a malfunction in the interlock system that must be repaired before operating vehicle.

**Refer to Attachment Operator's Manual for procedure on checking attachment interlock system.**

## OPERATING CHARACTERISTICS

The vehicle is designed with safety in mind. It has four wheels for added stability. It uses familiar automotive style controls, including the steering wheel, brake pedal, clutch pedal, accelerator pedal, and gear shifter. It is important to remember, however, that this vehicle is not a passenger car. It is a work vehicle and is designed for off road use only.

**WARNING**

**The WORKMAN® is an off−highway vehicle only, and is not designed, equipped, or manufactured for use on public streets, roads or highways.**

# OPERATING INSTRUCTIONS

The vehicle has special tires, low gear ratios, a locking differential, and other features that give it extra traction. These features add to the versatility of the vehicle but, they can also get you into dangerous situations. You must keep in mind that the vehicle is not a recreation vehicle. It is not an all terrain vehicle. And, it is definitely not meant for “stunt driving” or “horsing around”. It is a work vehicle, not a play vehicle. Children should not be allowed to operate the vehicle. Anyone who operates the vehicle should have a motor vehicle license.

If you are not experienced at driving the vehicle, practice driving it in a safe area away from other people. Be sure you are familiar with all the vehicle’s controls, particularly those used for braking, steering and transmission shifting. Learn how your vehicle handles on different surfaces. Your operating skills will improve with experience, but as in operating any vehicle, take it easy as you begin. Be sure you know how to stop quickly in an emergency. If you need help, ask your supervisor for assistance.

Many factors contribute to accidents. You have control over several of the most important. Your actions, such as driving too fast for conditions, braking too fast, turning too sharp, and combinations of these, are frequent cause of accidents.

One of the major causes of accidents is fatigue. Be sure to take occasional breaks. It is very important that you stay alert at all times.

Never operate the vehicle, or any equipment, if you are under the influence of alcohol or other drugs. Even prescription drugs and cold medicines can cause drowsiness. Read the label on the medicine or check with your doctor or pharmacist if you are unsure about a certain medication.

One of the most important rules to follow is to go slower in unfamiliar areas. It is surprising how much damage and injury common things can cause. Tree branches, fences, wires, other vehicles, tree stumps, ditches, streams, and other things found in most parks can be hazardous to the operator and passenger.

Avoid driving when it is dark, especially in unfamiliar areas. If you must drive when it is dark, be sure to drive cautiously and even consider adding additional lights, if needed.

## PASSENGERS

Whenever you have a passenger riding in the vehicle make sure he or she is holding on securely. Drive slower and turn less sharply because your passenger does not know what you are going to do next and may not be prepared for turning, stopping, accelerating, and bumps.

You and your passenger should remain seated at all times, keeping arms and legs inside the vehicle. The operator should keep both hands on steering wheel, whenever possible and passenger should use hand holds provided.

There should never be passengers in the dump box or on any attachments. The vehicle is meant to have one driver and only one passenger—no more.

## SPEED

Speed is one of the most important variables leading to accidents. Driving too fast for the conditions can cause you to lose control and have an accident. Speed can also make a minor accident worse. Driving head—on into a tree at slow speed can cause injury and damage, but, driving into a tree at high speed can destroy the vehicle and kill you and your passenger.

Never drive too fast for the conditions. If there is any doubt about how fast to drive, slow down.

## TURNING

Turning is another important variable leading to accidents. Turning too sharply for the conditions can cause the vehicle to lose traction and skid, or even tip over.

Wet, sandy and slippery surfaces make turning more difficult and risky. The faster you are going, the worse this situation becomes so, slow down before turning.

During a sharp turn at higher speeds, the inside rear wheel may lift off of the ground. This is not a flaw in the design, it happens with most four wheel vehicles including passenger cars. If this happens, you are turning too sharply for the speed at which you are traveling. Slow down!

## BRAKING

It is good practice to slow down before you get near an obstacle. This gives you extra time to stop or turn away. Hitting an obstacle can damage the vehicle and its contents. More important, it can injure you and your passenger.

Gross vehicle weight has a major impact on your ability to stop and/or turn. Heavier loads and heavier attachments make a vehicle harder to stop or turn. The heavier the load, the longer it takes to stop.

The braking characteristics also change with no bed or attachment on the vehicle. Fast stops may cause the rear wheels to lock up before the front wheels lock up, which may affect the control of the vehicle. It is a good idea to decrease vehicle speed with no bed or attachment.

Turf and pavement are much slipperier when they are wet. It can take 2 to 4 times as long to stop on wet surfaces as on dry surfaces.

If you drive through standing water deep enough to get the brakes wet, they will not work well until they are dry. After driving through water, you should test the brakes to make sure they work properly. If they do not, drive slowly in first gear while putting light pressure on the brake pedal. This will dry the brakes out.

# OPERATING INSTRUCTIONS

Do not downshift for braking on icy or slippery surfaces (wet grass) or while going down a hill because engine braking may cause skidding and loss of control. Shift to a lower gear before starting down a hill.

## TIPOVERS

The TORO Workman® is equipped with a roll bar, hip restraints, shoulder restraints and hand hold. The ROPS system used on the vehicle will reduce the risk of serious or fatal injury in the unlikely event of a tipover, although the system cannot protect the operator from all possible injuries.

Replace a damaged ROPS, do not repair or revise. Any alteration of ROPS must be approved by manufacturer.

The best way to prevent accidents involving utility vehicles is through continuous supervision and training of operators and paying constant attention to the area in which vehicle is being operated.

The best way for operators to prevent serious injury or death to themselves or others, is to familiarize themselves with the proper operation of the utility vehicle, to stay alert and to avoid actions or conditions which could result in a accident. In the event of a tip over, the risk of serious injury or death will be reduced if the operator is using the ROPS system and follows the instructions provided.

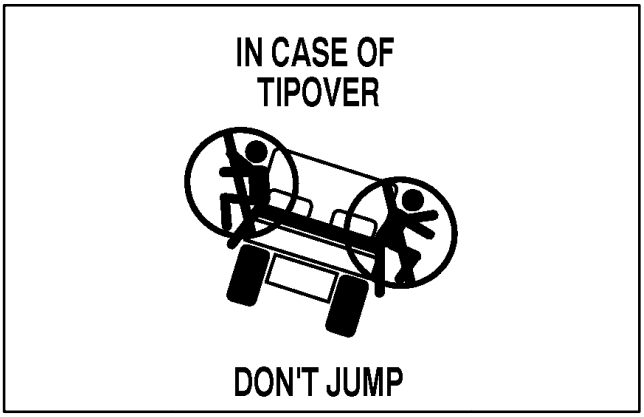


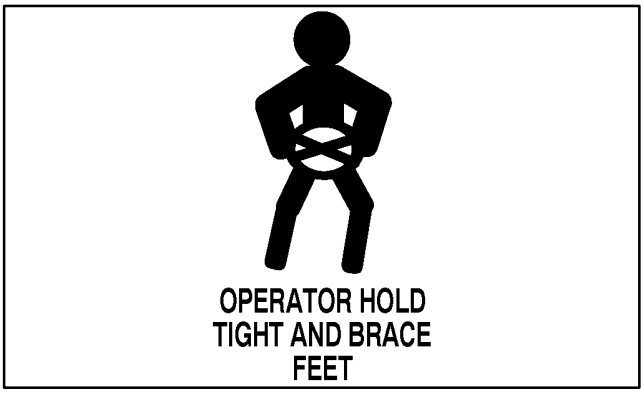





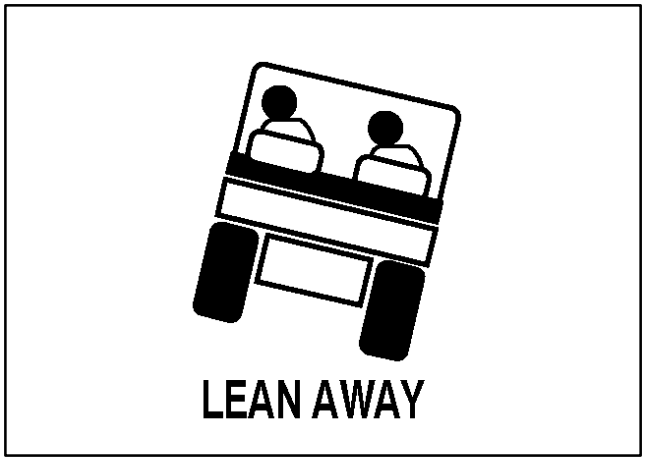


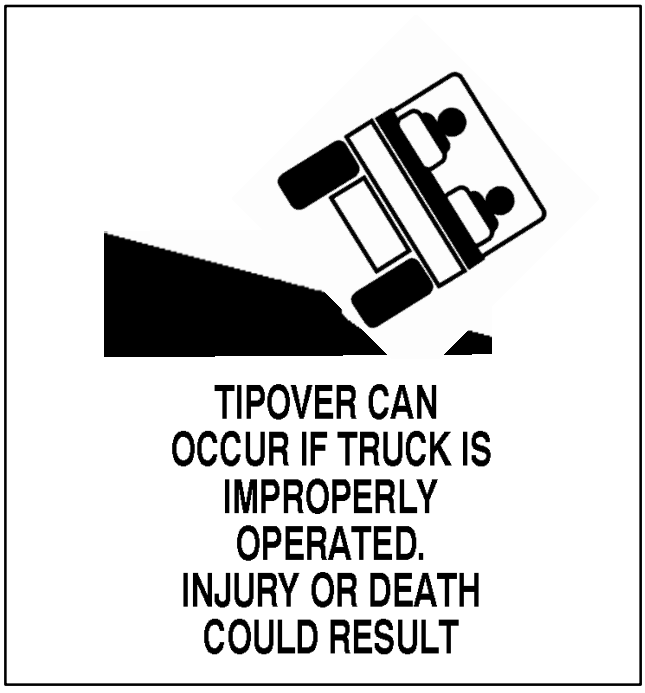

# OPERATING INSTRUCTIONS

## HILLS

**WARNING**

**Tipping or rolling the vehicle on a hill will cause serious personal injury.**

- **If engine stalls or you lose headway on a hill, never attempt to turn vehicle around.**
- **Always back straight down a hill in reverse gear.**
- **Never back down in neutral or with the clutch depressed, using only the brakes.**
- **Never drive across a steep hill, always drive straight up or down.**
- **Avoid turning on a hill**
- **Don't "drop the clutch" or slam on the brakes. Sudden speed change can initiate tipover.**

Use extra care when on hills. Never go on hills that are extremely steep. Stopping while going down a hill will take longer than on level ground. Turning while going up or down a hill is more dangerous than turning on the level. Turns while going down hill, especially with the brakes on, and, turning up hill while traversing a hill are particularly dangerous. Even at a slow speed and without a load, tip overs are more likely if you turn on a hill.

Slow down and shift into a lower gear before starting up or down a hill. If you have to turn while on a hill, do it as slowly and cautiously as possible. Never make sharp or fast turns on a hill.

If you stall or begin to lose headway while climbing a steep hill, quickly apply the brakes, shift to neutral, restart the engine and shift to reverse. At idle speed, engine and transaxle drag will aid the brakes in controlling the vehicle on the hill and help you back down the hill more safely.

Reduce the weight of the load if it is a steep hill or if the load has high center of gravity. Remember, loads can shift. Secure them.

## LOADING AND DUMPING

The weight and position of the cargo and passenger can change the vehicle center of gravity and vehicle handling. To avoid loss of control resulting in personal injury, follow these guidelines.

Do not carry loads which exceed the load limits described on the vehicle weight label.

The vehicle has several combinations of boxes, platforms, and attachments available. These can be used in various combinations that allow for maximum capacity and versatility. The full sized box is 55 inches wide by 65 inches long and can hold up to 2000 pounds of evenly distributed cargo.

Loads vary in how they are distributed. Sand spreads out evenly and quite low. Other items, such as bricks, fertilizer or landscape timbers, stack higher in the box.

The height and weight of the load has a significant influence on tip overs. The higher a load is stacked, the more likely the vehicle is to tip over. You may find that 2000 pounds stacks too high for safe operation. Reducing the total weight is one way to reduce the risk of a tip over. Distributing the load as low as possible is another way to reduce the risk of a tip over.

If the load is positioned toward one of the sides, it will make the vehicle much more likely to tip over on that side. This is especially true when turning if the load is on the outside of the turn.

Never position heavy loads behind the rear axle. If the load is positioned so far to the rear that it is behind the rear axle, it will reduce the weight on the front wheels and this will reduce steering traction. With the load all the way to the back, the front wheels can even come off of the ground when going over bumps or up a hill. This will result in a loss of steering and may lead to the vehicle tipping over.

**As a general rule, position the weight of the load evenly from front to rear and evenly from side to side.**

If a load is not secured, or you are transporting a liquid in a large container such as a sprayer, it can shift. This shifting happens most often while turning, going up or down hills, suddenly changing speeds or while driving over rough surfaces. Shifting loads can lead to tip overs. Always secure loads so that they do not shift. Never dump the load while the vehicle is sideways on the hill.

Heavy loads increase stopping distance and reduce your ability to turn quickly without tipping over.

The rear cargo space is intended for load carrying purposes only, not for passengers.

## TRANSPORTING VEHICLE

For moving the vehicle long distances, a trailer should be used. Make sure the vehicle is secured to the trailer. Refer to Figures 22 and 23 for location of tie down points.

# OPERATING INSTRUCTIONS

## TOWING VEHICLE

In case of emergency, the vehicle can be towed for a short distance. However, Toro does not recommend this as a standard procedure.

**WARNING**

**Towing at excessive speeds could cause vehicle to lose steering control. Never tow vehicle faster than 5 MPH.**

Towing the vehicle is a two person job. Affix a tow line to holes in front frame member. Move shifter to Neutral and release parking brake. If machine must be moved a considerable distance, transport it on a truck or trailer.

**Note: The power steering will not function, making it difficult (increase effort) to steer.**

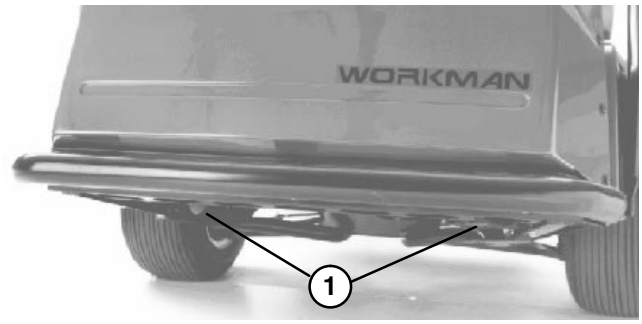


**Figure 22**

1. Eye holes in frame

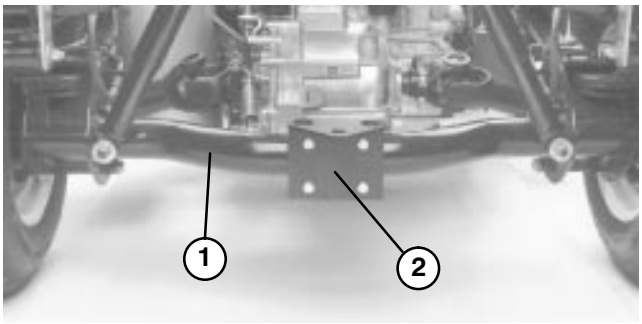


**Figure 23**

1. Axle tube
2. Hitch plate

## TRAILER TOWING

The Workman® is capable of pulling trailers and attachments of greater weight than the vehicle itself.

Several types of tow hitches are available for the Workman, depending on your application. Contact your Authorized TORO Distributor for details.

When equipped with a tow hitch bolted onto rear axle tube, your Workman can tow trailers or attachments with a Gross Trailer Weight (GTW) up to 1500 lbs. Always load a trailer with 60% of the cargo weight in the front of the trailer. This places approximately 10% (200 lbs. max.) of the Gross Trailer Weight (GTW) on the tow hitch of the vehicle.

When towing either standard tongue or 5th wheel trailers having a Gross Trailer Weight (GTW) in excess of 1500 lbs., use either a chassis mounted draw bar hitch (rated for 3500 lb. GTW) or 5th wheel kit with brakes. Trailer brakes are required whenever a trailer over 1500 lbs. GTW is towed behind a Workman vehicle.

When hauling cargo or towing a trailer (attachment), do not overload your vehicle or trailer. Overloading can cause poor performance or damage to the brakes, axle, engine, transaxle, steering, suspension, body structure or tires.

**Important:** To reduce potential for drive line damage, use first gear.

When towing 5th wheel attachments, like a fairway aerator, always install the ”wheely bar”(included with the 5th wheel kit) to prevent the front wheels from lifting off the ground if the towed attachments movement is suddenly impaired.

# MAINTENANCE CHART AND CHECKLIST

Daily Maintenance: (duplicate this page for routine use)
Check proper section of Operator's Manual for fluid specifications

| **Maintenance Check Item ➧** | **Daily Maintenance Check For Week Of _____** | | | | | | |
|---|---|---|---|---|---|---|---|
| | MON | TUES | WED | THURS | FRI | SAT | SUN |
| ✓ Safety Interlock Operation | | | | | | | |
| ✓ Service & Park Brake Operation | | | | | | | |
| ✓ Fuel Level | | | | | | | |
| ✓ Accelerator Operation | | | | | | | |
| ✓ Clutch & Shifter Operation | | | | | | | |
| ✓ Engine Oil Level | | | | | | | |
| ✓ Transaxle Oil Level | | | | | | | |
| ✓ Cooling System Fluid Level[1] | | | | | | | |
| ✓ Brake Fluid Level | | | | | | | |
| ✓ Air Cleaner (Dust Cup & Filter)[2] | | | | | | | |
| ✓ Unusual Engine Noises | | | | | | | |
| ✓ Unusual Operating Noises | | | | | | | |
| ✓ Radiator Screen/Clean out Door[2] | | | | | | | |
| ✓ Hydraulic Hoses for Damage | | | | | | | |
| ✓ Fluid Leaks | | | | | | | |
| ✓ Instrument Operation | | | | | | | |
| Lubricate All Grease Fittings[3] | | | | | | | |
| Touch–up Damaged Paint | | | | | | | |

[1]= Inspect at Overflow Tank
[2]= More often when conditions are dirty
[3]= Immediately <u>after every</u> washing, regardless of the interval listed.

**Notation for areas of concern:** Inspection performed by_____

| Item | Date | Information |
|---|---|---|
| 1 | | |
| 2 | | |
| 3 | | |
| 4 | | |
| 5 | | |
| 6 | | |
| 7 | | |
| 8 | | |

# QUICK REFERENCE CHART

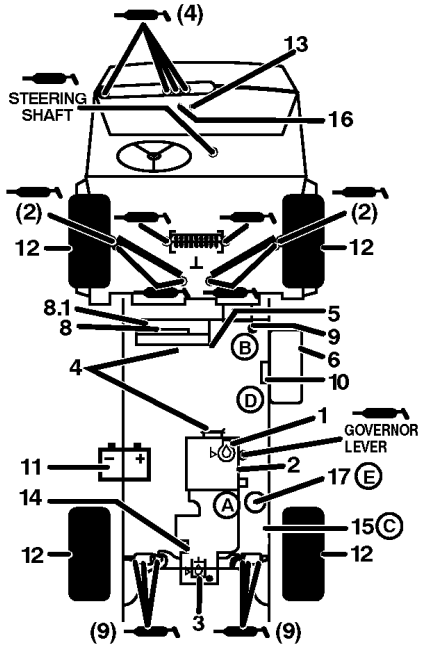


## WORKMAN 3310-D QUICK REFERENCE AID

### CHECK/SERVICE

1. ENGINE OIL LEVEL
2. ENGINE OIL DRAIN
3. TRANSAXLE/HYDRAULIC OIL LEVEL (DIP STICK)
4. BELTS (GOVERNOR, WATER PUMP, HYDRAULIC PUMP)
5. COOLANT LEVEL FILL
6. FUEL (DIESEL FUEL ONLY)
7. GREASE POINTS (34) — 100 HRS.
8. RADIATOR SCREEN
8.1. RADIATOR SCREEN CLEANOUT DOOR
9. AIR CLEANER
10. FUEL PUMP
11. BATTERY
12. TIRES: FOAM FILLED
13. FUSES: LIGHTS 10 AMP, IGNITION 7.5 AMP, DASH ACCESSORIES 7.5 AMP
14. HYDRAULIC STRAINER
15. HYDRAULIC OIL FILTER
16. BRAKE FLUID
17. WATER SEPARATOR

### FLUID SPECIFICATIONS/CHANGE INTERVALS

| SEE OPERATOR'S MANUAL FOR INITIAL CHANGES | FLUID TYPE | CAPACITY L | CAPACITY QT | CHANGE INTERVALS FLUID | CHANGE INTERVALS FILTER | FILTER PART NO. |
|---|---|---|---|---|---|---|
| ENGINE OIL | SAE 10W-30 | 3.7 | 3.9 | 100 HRS. | 100 HRS. | 67-4330 (A) |
| TRANS/HYDRAULIC OIL | DEXRON III ATF | 7.1 | 7.5 | 800 HRS. | 800 HRS. | 54-0110 (C) |
| AIR CLEANER | CLEAN EVERY 50 HRS. | | | | 200 HRS. | 93-2195 (B) |
| FUEL > 32° F | NO. 2-D | 26.5 | 7 GAL | --- | 400 HRS. | 63-8300 WATER SEPARATOR (E) |
| FUEL PUMP | --- | --- | --- | --- | 400 HRS. | 43-2550 (D) |
| COOLANT 50/50 ETHYLENE GLYCOL WATER | --- | 4.3 | 4.5 | 1200 HRS. | --- | --- |
| STRAINER | --- | --- | | CLEAN 800 HRS. | | 87-3990 |

FOR HEAVY DUTY OPERATION, MAINTENANCE SHOULD BE PERFORMED TWICE AS FREQUENTLY.

99-1085

# LUBRICATION

**WARNING**

**Before servicing or making adjustments to the machine, stop engine, set parking brake and remove key from ignition switch. Any load material must be removed from bed or other attachment before working under raised bed. Always place the safety support on extended lift cylinder to hold box up.**

## GREASING BEARINGS AND BUSHINGS

**(Fig. 24–29)**

The vehicle has grease fittings that must be lubricated regularly with No. 2 General Purpose Lithium Base Grease. If machine is operated under normal conditions, lubricate all bearings and bushings after every 100 hours of operation. More frequent lubrication is required if used for heavy duty vehicle operations.

The grease fitting locations and quantities are: Tie rod ends (4) (Fig. 24), Front ball joints (4) (Fig. 24), Rear drive shafts (18) (Fig. 25) Front pivot bushings (2) (Fig. 26); Pedal Pivots (4) (Fig. 27); Steering shaft (1) (Fig. 28) and Accelerator Arm (1) (Fig. 29).

**IMPORTANT:** When greasing drive shaft universal shaft bearing crosses, pump grease until it comes out of all 4 cups at each cross.

1. Wipe grease fitting clean so foreign matter cannot be forced into the bearing or bushing.
2. Pump grease into the bearing or bushing.
3. Wipe off excess grease.

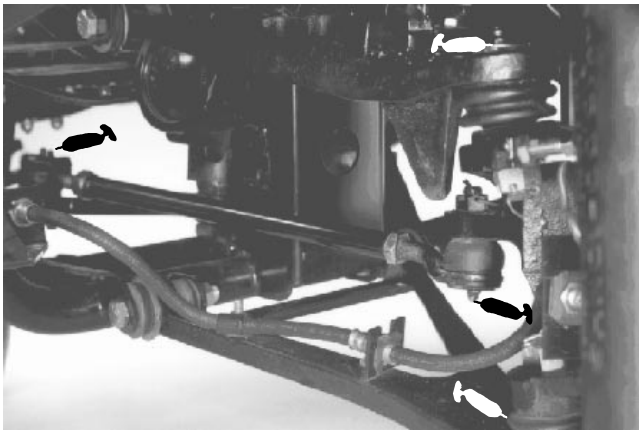

**Figure 24**

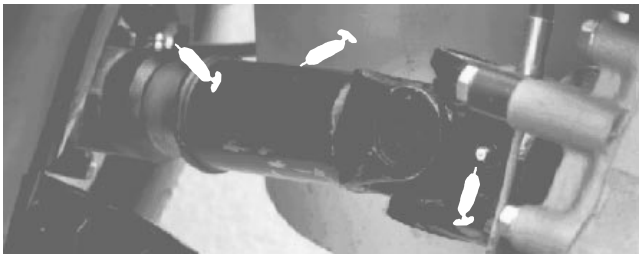

**Figure 25**

# LUBRICATION



Figure 26

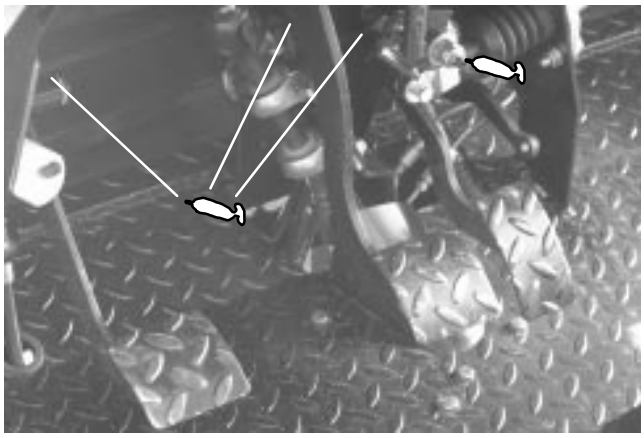

Figure 27



Figure 28

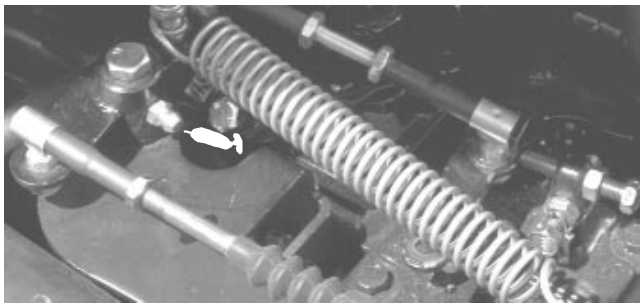

Figure 29

## IMPORTANT

### Heavy Duty Operation

**If vehicle is subjected to conditions listed below, maintenance should be performed twice as frequently.**

- **Desert operation**
- **Cold climate operation (below 32°F)**
- **Trailer or 5th wheel towing**
- **Frequent operation on dusty roads**
- **Frequent operation under maximum vehicle gross weight**
- **Construction work**
- **After extended operation in mud, sand, water or similar dirty conditions, have your brakes inspected and cleaned and drive axle joints greased as soon as possible. This will prevent any abrasive material from causing excessive wear.**
- **Under frequent heavy duty operating conditions, lubricate all grease fittings and inspect air cleaner daily to prevent excessive wear.**

## CAUTION

**Only qualified and authorized personnel shall be permitted to maintain, repair, adjust or inspect the vehicle.**

**Avoid fire hazards and have fire protection equipment present in the work area. Do not use an open flame to check level or leakage of fuel, battery electrolyte or coolant. Do not use open pans of fuel or flammable cleaning fluids for cleaning parts.**

**Many of the subjects covered in this maintenance section require raising and lowering the bed. The following precautions must be taken or serious injury or death could result.**

## WARNING

**Before servicing or making adjustments to the machine, stop engine, set parking brake and remove key from ignition switch. Any load material must be removed from bed or other attachment before working under raised bed. Never work under a raised bed without positioning a safety support.**

**After maintenance is completed, remove safety support.**

### JACKING VEHICLE (Fig. 30 & 31)

**1.** Do not start engine while vehicle is on jack, because engine vibration or wheel movement could cause vehicle to slip off jack.

**2.** Do not work under vehicle without jack stands supporting it. The vehicle could slip off jack, injuring any one beneath it.

**3.** The jacking point at the front of the vehicle is under the front center frame support and at the rear it is under the axle tube.

**4.** When jacking up front of vehicle, always place a 2x4 block (or similar material) between jack and vehicle frame.

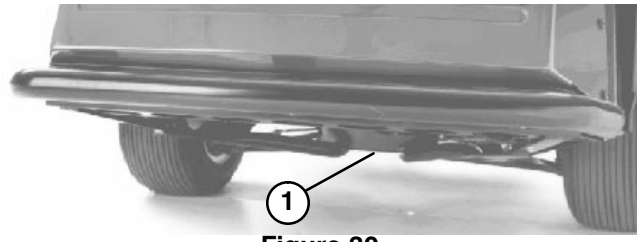


**Figure 30**

1. **Front jacking point**

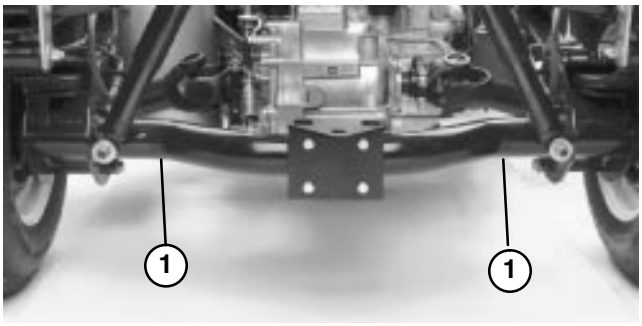


**Figure 31**

1. **Rear jacking points**

### GENERAL AIR CLEANER MAINTENANCE

**1.** Check air cleaner body for damage which could possibly cause an air leak. Replace a damaged air cleaner body.

**2.** Service the air cleaner filters when ever air cleaner indicator (Fig. 32) shows red or every 400 hours (more frequently in extreme dusty or dirty conditions). Do not over service air filter.

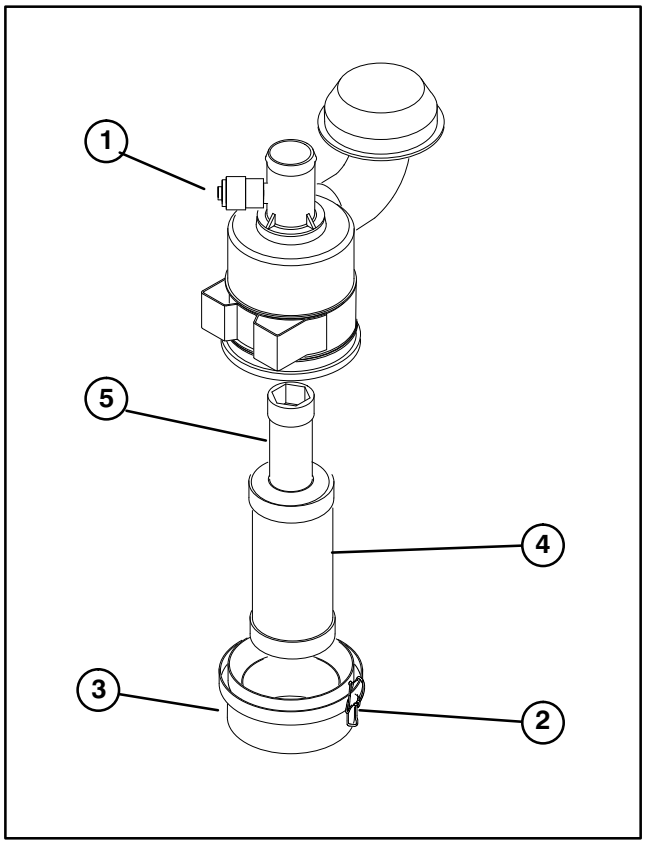


**Figure 32**

1. **Air cleaner indicator**
2. **Air cleaner latches**
3. **Dust cup**
4. **Air cleaner primary filter**
5. **Air cleaner safety filter**

**2.** Be sure cover is sealing around air cleaner body.

# MAINTENANCE

## SERVICING AIR CLEANER

**1.** Release latches securing air cleaner cover to air cleaner body. Separate cover from body. Clean inside of air cleaner cover.

**2.** Gently slide primary filter (Fig. 32) out of air cleaner body to reduce the amount of dust dislodged. Avoid knocking filter against air cleaner body. **Do not remove safety filter.**

**3.** Inspect primary filter and discard if damaged. Do not wash or reuse a damaged filter.

**IMPORTANT: Never attempt to clean a safety filter (Located inside primary filter). Replace the safety filter with a new one after every three primary filter services.**

**Washing Method**

A. Prepare a solution of filter cleaner and water and soak filter element about 15 minutes. Refer to directions on filter cleaner carton for complete information.

B. After soaking filter for 15 minutes, rinse it with clear water. Maximum water pressure must not exceed 40 psi to prevent damage to the filter element. Rinse filter from clean side to dirty to side.

C. Dry filter element using warm, flowing air (160°F ) max), or allow element to air−dry. Do not use a light bulb to dry the filter element because damage could result.

**Compressed Air Method**

A. Blow compressed air from inside to the outside of dry filter element. Do not exceed 100 psi to prevent damage to the element.

B. Keep air hose nozzle at least 2” from filter and move nozzle up and down while rotating the filter element. Inspect for holes and tears by looking through the filter toward a bright light.

**5.** Inspect new filter for shipping damage. Check sealing end of filter. Do not install a damaged filter.

**6.** Insert new filter properly into air cleaner body. Make sure filter is sealed properly by applying pressure to outer rim of filter when installing. Do not press on flexible center of filter.

**7.** Reinstall cover and secure latches.

**8.** Reset indicator (Fig. 32) if showing red.

## CHANGING ENGINE OIL AND FILTER

**(Fig. 33 & 34)**

Change oil and filter initially after the first 50 hours of operation, thereafter, change oil and filter every 100 hours.

**1.** Raise bed (if so equipped) and place a safety support under it to hold up bed.

**2.** Remove drain plug and let oil flow into drain pan. When oil stops, install drain plug.

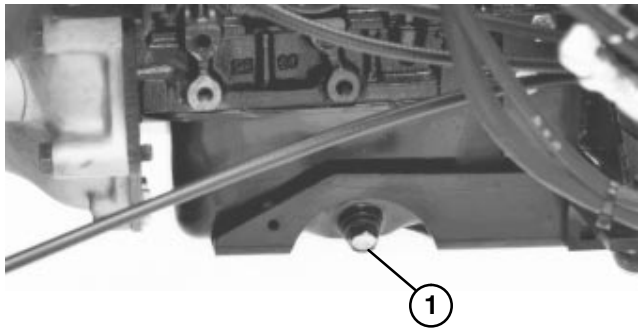


**Figure 33**

**1. Engine Oil Drain Plug**

**3.** Remove oil filter. Apply a light coat of clean oil to the new filter seal before screwing it on. Screw filter on until gasket contacts mounting plate, then tighten 1/2 to 2/3 of a turn. DO NOT OVER−TIGHTEN.

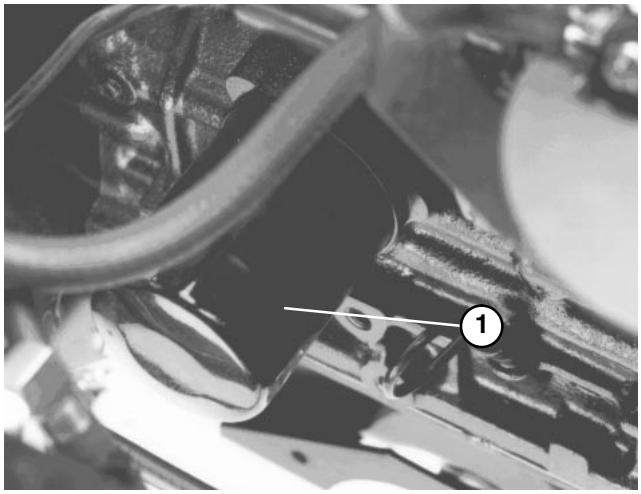


**Figure 34**

**1. Engine Oil Filter**

**4.** Add oil to crankcase, refer to Check Engine Oil.

## FUEL SYSTEM (Fig. 35−37)

**Fuel Lines and Connections**

Check lines and connections every 400 hours or yearly, whichever comes first. Inspect for deterioration, damage, or loose connections.

**Fuel Filter/Water Separator**

Drain water or other contaminants from fuel filter/water separator daily by loosening drain plug (Fig. 36) on filter canister. Tighten plug after draining. Replace filter canister after every 400 hours of operation.

**1.** Raise bed (if so equipped) and place a safety support under it to hold up bed.

**2.** Fuel filter/water separator is mounted on inner side of right frame rail (Fig. 35).

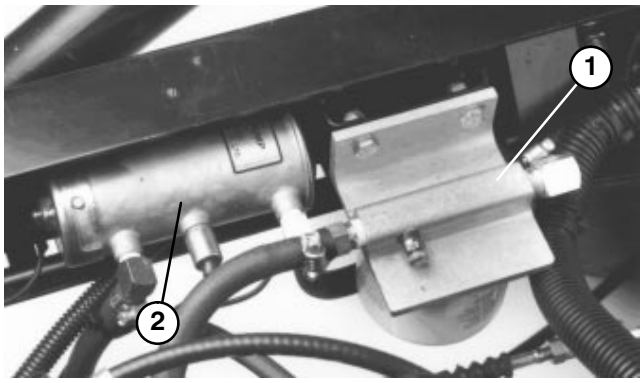


**Figure 35**

1. **Fuel filter/water separator**
2. **Fuel pump**

**3.** Clean area around filter canister mounting surface.

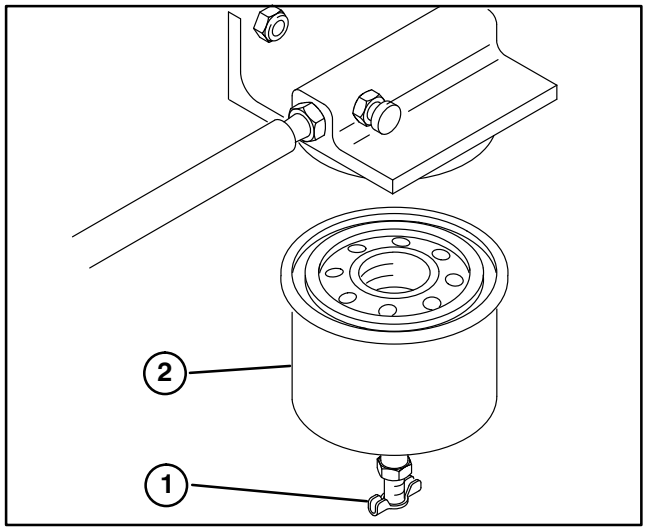


**Figure 36**

1. **Drain plug**
2. **Filter canister**

**4.** Remove filter canister and clean mounting surface.

**5.** Lubricate gasket on filter canister with clean engine oil.

**6.** Install filter canister by hand until gasket contacts mounting surface, then rotate an additional 1/2 turn.

### Fuel Pump Filter

Remove and replace the filter after every 400 hours operation.

**1.** Raise bed (if so equipped) and place a safety support under it to hold up bed.

**2.** Fuel pump is mounted on inner side of right frame rail (Fig. 35).

**3.** Thoroughly clean outside of assembly.

**4.** Place a drain pan under fuel pump and remove cover from fuel pump (Fig. 37). Take care not to damage wire while removing cover.

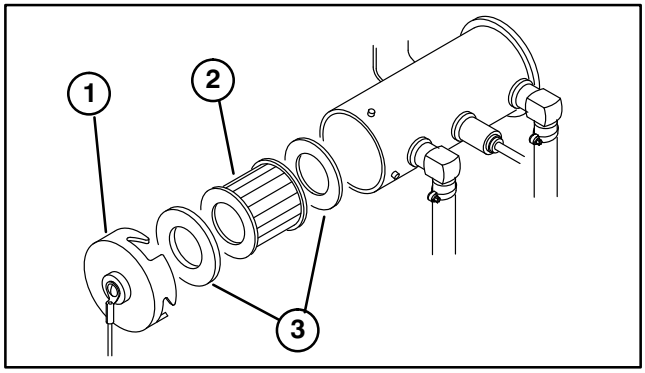


**Figure 37**

1. **Fuel pump cover**
2. **Filter**
3. **Gasket**

**5.** Pull filter out of pump body (Fig. 37).

**6.** If filter is to be cleaned, wash thoroughly in cleaning solvent and blow compressed air from inside toward outside of element. Hold air nozzle at least one inch (25 mm) from filter and move up and down while rotating filter. Do not exceed 100 psi (689 kPa) to avoid filter damage.

**Note:** Replace the filter if there is any visible dirt which cannot be washed out.

**7.** Inspect the two rubber gaskets; replace them if damaged.

**8.** Clean cover of any residue (Fig. 37), insert filter into body and install cover.

**9.** Bleed the fuel system; refer to Bleeding Fuel System.

## BLEEDING AIR FROM INJECTORS (Fig. 38)

**Note:** This procedure should be used only if fuel system has been purged of air through normal priming procedures and engine still will not start; refer to Bleeding Fuel System.

**1.** Raise bed (if so equipped) and place a safety support under it to hold up bed.

**2.** Loosen the pipe connection to the No. 1 nozzle and holder assembly (Fig. 38).

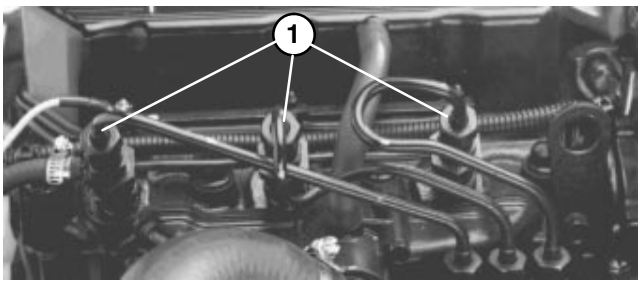


**Figure 38**

1. **Fuel injectors (3)**

**3.** Slowly depress accelerator pedal to full FAST position.

**4.** Turn key in key switch to START position and watch fuel flow around connector. Turn key to OFF position when solid flow is observed.

**5.** Tighten pipe connector securely.

**6.** Repeat steps 1-4 on No. 2 and 3 nozzles.

## REMOVING DEBRIS FROM ENGINE COOLING SYSTEM (Fig. 39)

Remove debris from engine area and radiator daily, clean more frequently in dirty conditions.

**1.** Remove radiator cover.

**2.** Turn engine off. Clean engine area thoroughly of all debris.

**3.** Remove screen cover from front of radiator.

**4.** Open radiator screen clean out door at lower left side of radiator and remove all debris from bottom of radiator inlet area.

**5.** Clean radiator thoroughly with water or compressed air.

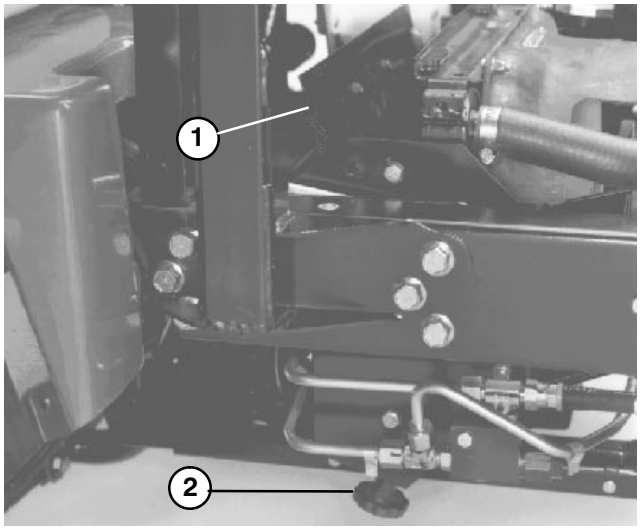


**Figure 39**
1. Radiator screen cover
2. Clean out door

## CHANGING ENGINE COOLANT (Fig. 40)

**1.** Park machine on a level surface.

**CAUTION**

**If engine has been running, pressurized hot coolant can escape if radiator cap is removed and cause burns. Allow engine to cool at least 15 minutes or until the radiator cap is cool enough to touch without burning hand.**

**2.** Raise bed (if so equipped) and place a safety support under it to hold up bed.

**3.** Remove radiator and reserve tank caps.

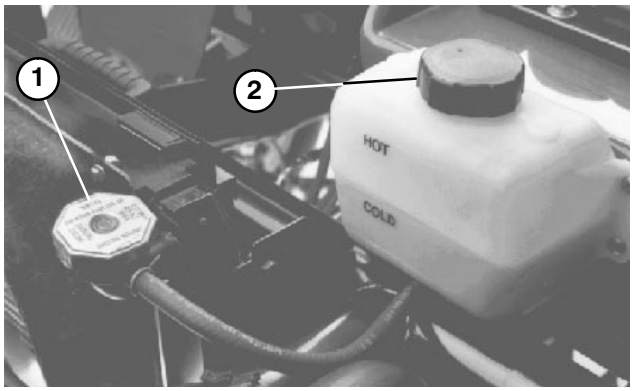


**Figure 40**
1. Radiator cap
2. Reserve tank cap

**4.** Open coolant drain cock at bottom of radiator and allow coolant to flow into drain pan. When coolant stops, close drain cock.

**5.** Remove coolant drain plug from engine and allow coolant to flow into drain pan. When coolant stops, install drain plug.

**6.** Slowly fill radiator with a 50/50 mixture of water and permanent ethylene glycol anti−freeze. Install radiator cap.

**7.** Slowly fill reserve tank until level reaches COLD line. **DO NOT OVERFILL**. Install reserve tank cap.

**8.** Start engine and operate until warm. Recheck level and replenish, if required.

## ADJUSTING BELTS (Fig. 41−42)

Check condition and tension of all belts after first day of operation and every 200 operating hours thereafter. Raise bed (if so equipped) and place a safety support to hold up bed.

### Alternator belt (Fig. 41)

**1.** Check tension by depressing belt at mid span of crankshaft and alternator pulleys with 22 lbs. of force. A new belt should deflect .3−.5 in. A used belt should deflect .4−.55 in. If deflection is incorrect, proceed to next step. If correct, continue operation.

**2.** To adjust belt tension:

**A.** Loosen alternator mounting bolts.

**B.** Using a bar, rotate alternator until proper belt tension is attained, then tighten mounting bolts.

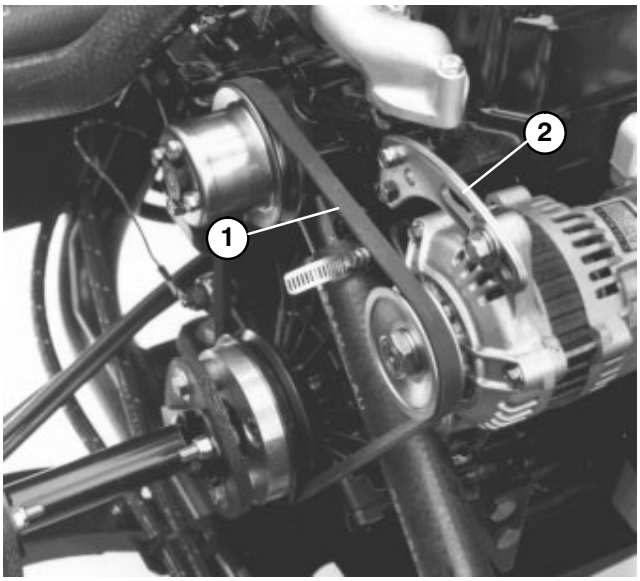


**Figure 41**
1. **Alternator belt**
2. **Alternator brace**

**Fan belt (Fig. 42)**

**1.** Check tension by depressing belt at mid span of fan and drive shaft pulleys with 22 lbs. of force. A new belt should deflect .48−.58 in. A used belt should deflect .55−.65 in. If deflection is incorrect, proceed to next step. If correct, continue operation.

**2.** To adjust belt tension:

**A.** Loosen idler pulley mounting nut, move pulley to increase tension and tighten nut.

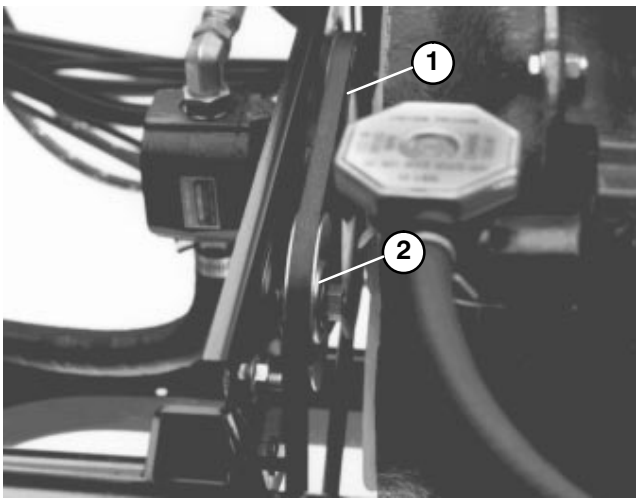


**Figure 42**
1. **Fan belt**
2. **Idler pulley**

## ADJUSTING ACCELERATOR PEDAL (Fig. 43)

If engine throttle lever does not contact high idle stop when accelerator pedal is fully depressed, an adjustment to the accelerator cable is required. Check adjustment every 200 operating hours.

**1.** Position vehicle on level surface, stop engine and engage the parking brake.

**Note:** Engine must not be running and return spring must be attached.

**2.** Adjust ball joint on accelerator cable to allow .100"−.250" clearance between accelerator pedal and top of diamond tread floor plate, when a 25 lb. force is applied to center of pedal. Tighten locknut.

**WARNING**

**Engine must be running so final adjustment can be performed. To guard against possible personal injury, engage parking brake and keep hands, feet, face and other parts of the body away from fan or other moving parts.**

**3.** Maximum high idle speed 3650 rpm. High idle stop should not be adjusted.

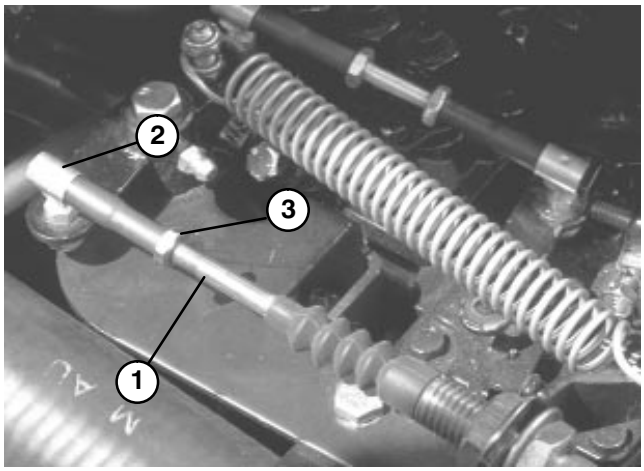


**Figure 43**
1. **Accelerator cable**
2. **Ball joint**
3. **Locknut**

## CYLINDER HEAD BOLTS

Re−torque initially after 50 operating hours and check every 1000 operating hours or annually thereafter.

## ENGINE VALVE CLEARANCE

Adjust initially at 50 operating hours and check every 600 operating hours or annually thereafter.

## CHANGING TRANSAXLE / HYDRAULIC FLUID (Fig. 44)

Change Transaxle hydraulic fluid, filter and clean strainer every 800 hours.

**1.** Position the vehicle on a level surface, stop engine, engage the parking brake and remove key from ignition switch.

**2.** Remove drain plug from side of reservoir and let hydraulic fluid flow into drain pan. Reinstall and tighten plug when hydraulic fluid stops draining.

**3.** Fill reservoir with approximately 7.5 qt. of Dexron III ATF. Refer to Checking Hydraulic Fluid.

**4.** Start engine and operate to fill hydraulic system. Recheck oil level and replenish, if required.

**IMPORTANT: Use only hydraulic fluids specified. Other fluids could cause system damage.**

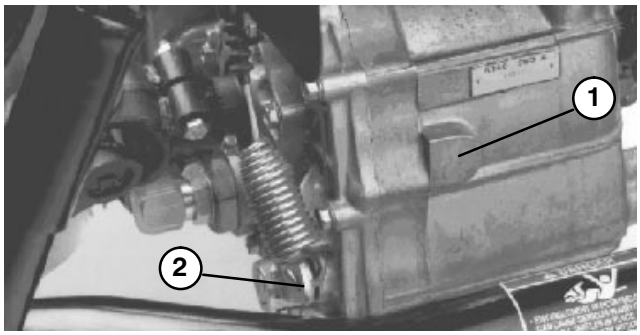


**Figure 44**
1. Hydraulic Reservoir
2. Drain plug

## REPLACING HYDRAULIC FILTER (Fig. 45)

Use the Toro replacement filter (Part No. 54−0110 ).

**IMPORTANT: Use of any other filter may void the warranty on some components.**

**1.** Position vehicle on a level surface, stop engine, engage parking brake and remove key from ignition switch.

**2.** Clean area around filter mounting area. Place drain pan under filter and remove filter.

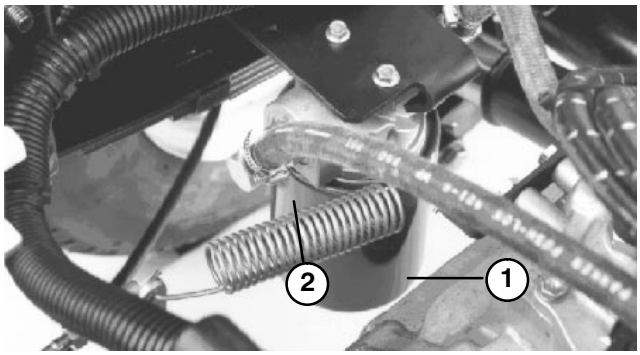


**Figure 45**
1. Hydraulic Filter
2. Gasket

**3.** Lubricate new filter gasket.

**4.** Assure filter mounting area is clean. Screw filter on until gasket contacts mounting plate. Then tighten filter one−half turn.

**5.** Start engine and let run for about two minutes to purge air from the system. Stop the engine and check the hydraulic oil level and for leaks.

## CLEANING HYDRAULIC STRAINER (Fig. 46)

**1.** Position the vehicle on a level surface, stop engine, engage the parking brake and remove key from ignition switch.

**2.** Remove drain plug (Fig. 44) from side of reservoir and let hydraulic fluid flow into drain pan.

**3.** Remove hydraulic line and fitting connected to strainer on side of reservoir.

**4.** Remove strainer and clean by back flushing with a clean degreaser. Allow to air dry before reinstalling.

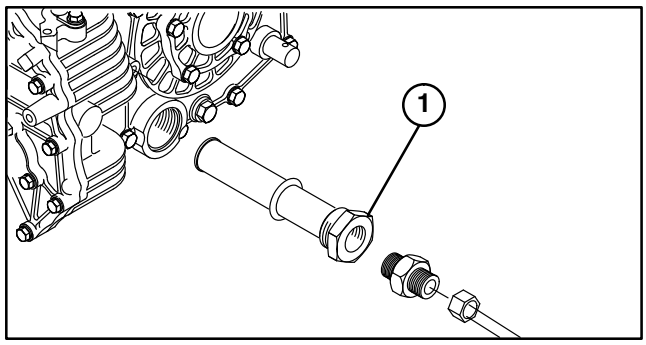


**Figure 46**
1. Hydraulic strainer

**5.** Reinstall strainer.

**6.** Reinstall hydraulic line and fitting to strainer.

**7.** Reinstall and tighten drain plug.

**8.** Fill reservoir with approximately 7.5 qt. of Dexron III ATF. Refer to Checking Hydraulic Fluid.

## ADJUSTING BRAKE PEDAL (Fig. 47−48)

Check adjustment every 200 hours.

**1.** Loosen jam nut on link rod ball joint.

**2.** Rotate rod until gap between brake pedal and up stop is .020−.080".

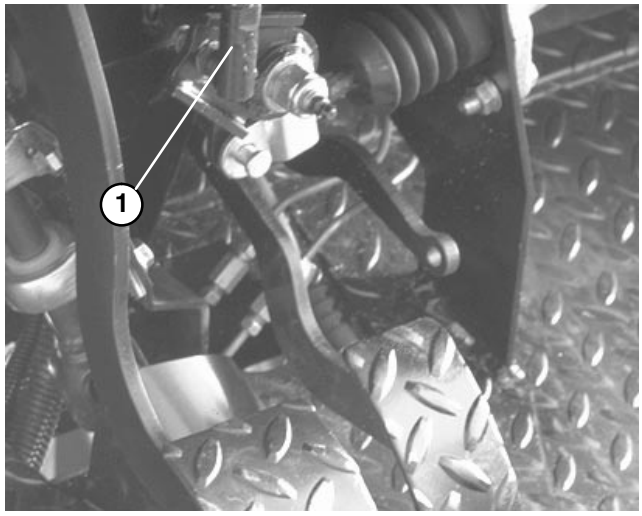


**Figure 47**
1. Link rod ball joint

**3.** Tighten jam nut after adjustment has been attained.

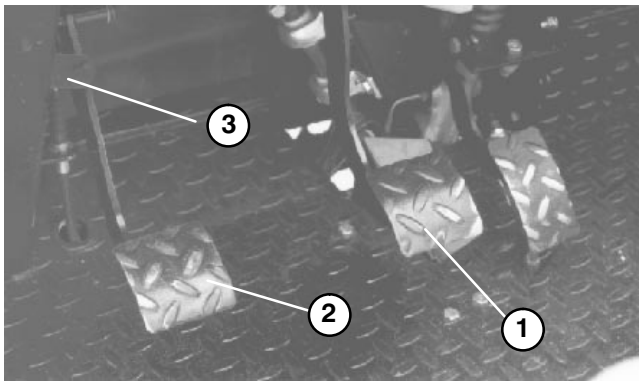


**Figure 48**
1. Brake pedal
2. Clutch pedal
3. Clutch pedal up stop

## ADJUSTING CLUTCH PEDAL (Fig. 48–49)

Check adjustment every 200 hours.

**1.** Loosen jam nuts securing clutch cable to bracket on bell housing.

**Note:** Ball joint may be removed and rotated If additional adjustment is required.

**2.** Disconnect return spring from clutch lever.

**3.** Adjust jam nuts and/or ball joint until bottom rear edge of clutch pedal is 4.25" ± .12" from top of floor plate diamond pattern, when an 4 lb. force is applied to pedal.

**Note:** Force is applied so release bearing lightly contacts pressure plate fingers.

**4.** Reconnect return spring to clutch lever.

**5.** Verify that rear edge of clutch pedal is 5.5" ± .12" from top of floor plate diamond pattern. If dimension is not attained, adjust clutch pedal up stop.

**Note:** Clutch free play should never be less than .75" .

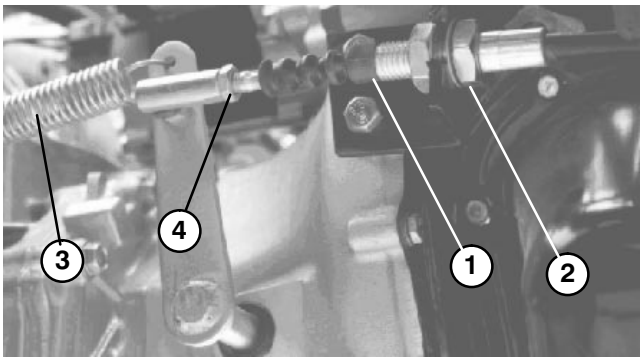


**Figure 49**
1. Clutch cable
2. Jam nuts
3. Return spring
4. Ball joint

**6.** Tighten jam nuts after adjustment has been attained.

**7.** Recheck clutch safety switch adjustment (Fig. 50). Engine must not crank unless clutch pedal is 1.25" ±.25" from floor. If an adjustment is required, loosen switch jam nuts and adjust up or down.

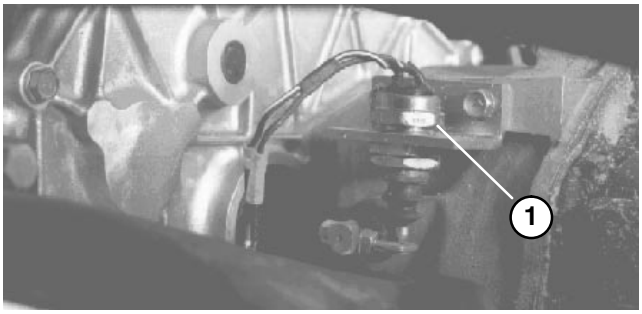


**Figure 50**
1. Clutch switch

## ADJUSTING PARKING BRAKE (Fig. 51)

Check adjustment every 200 hours.

**1.** Loosen set screw securing knob to parking brake lever.

**2.** Rotate knob until a force of 35–45 lbs. for 2 wd models and 45–55 lbs. for 4 wd models is required to actuate lever.

**3.** Tighten set screw after adjustment has been attained.

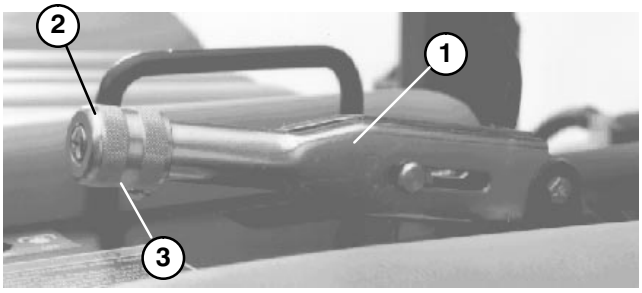


**Figure 51**
1. Parking brake lever
2 Knob
3. Set screw

## ADJUSTING SHIFT CABLES

Check adjustment every 200 hours.

**1.** Move shift lever to Neutral position.

**2.** Remove clevis pins securing shift cables to transaxle shift arms.

**3.** Loosen clevis jam nuts and adjust each clevis so cable free play is equal forward and backward relative to hole in transaxle shift arm (With transaxle lever free play taken up in same direction).

**4.** Reinstall clevis pins and tighten jam nuts after adjustments have been attained.

# MAINTENANCE

## INSPECT BRAKES

Visually inspect brakes for worn brake shoes after every 600 hours of operation.

## INSPECT TIRES

Check tire condition at least every 100 hours of operation. Operating accidents, such as hitting curbs, can damage a tire or rim and also disrupt wheel alignment, so inspect tire condition after an accident.

## FRONT WHEEL TOE−IN (Fig. 52−53)

After every 600 operating hours or annually, check front wheel toe−in.

**1.** Measure center−to−center distance (at axle height) at front and rear of steering tires. Front measurement must be equal to the rear measurement ±1/8 in..

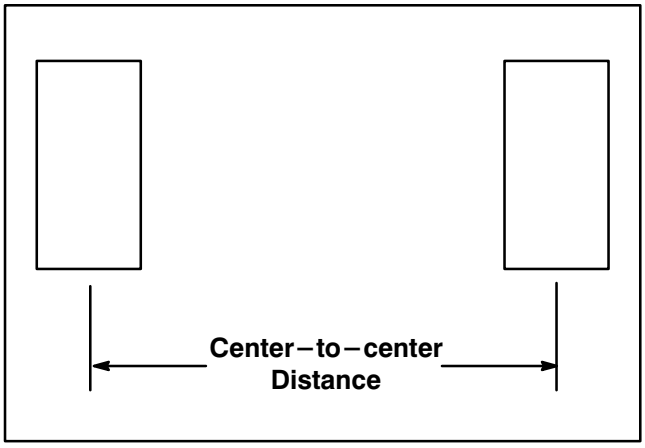


**Figure 52**

**2.** To adjust**,** loosen jam nuts at both ends of tie rod.

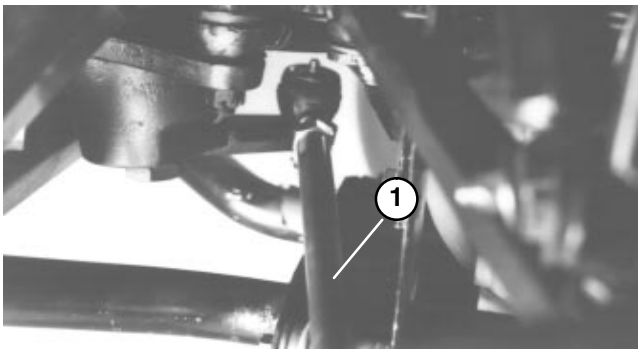


**Figure 53**
**1. Tie rod**

**3.** Rotate tie rod to move front of tire inward or outward.

**4.** Tighten tie rod jam nuts when adjustment is correct.

## FUSES (Fig. 54)

There are 3 fuses in the machine's electrical system. They are located under right side of dash panel.

| FUSES | |
|---|---|
| OPEN | −− |
| LIGHTS & HORN | 15A |
| DASH | 7.5A |
| IGNITION | 7.5A |

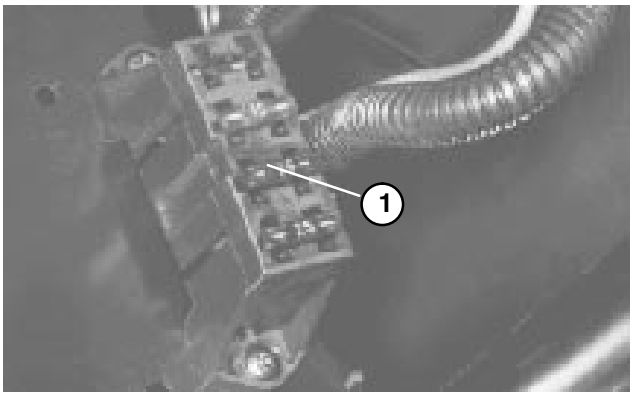


**Figure 54**
**1. Fuse block**

## JUMP STARTING PROCEDURE

**WARNING**

**Jump starting can be dangerous. To avoid personal injury or damage to electrical components in vehicle, observe the following warnings:**

- **Never jump start with a voltage sources greater than 15 volts D.C. This will damage the electrical system.**
- **Never attempt to jump start a discharged battery that is frozen. It could rupture or explode during jump starting.**
- **Observe all battery warnings while jump starting your vehicle.**
- **Be sure your vehicle is not touching the jump start vehicle.**
- **Connecting cables to the wrong post could result in personal injury and/or damage to the electrical system.**

**1.** Loosen knobs securing battery cover to battery base and slide cover off.

**2.** Connect a jumper cable between the positive posts of the two batteries. The positive post may be identified by a "+" sign on top of battery cover.

**3.** Connect one end of the other jumper cable to the negative terminal of the battery in the other vehicle. The negative terminal has “NEG” on the battery cover. Do not connect the other end of the the jumper cable to the negative post of the discharged battery. Connect it to the engine. Do not connect the jumper cable to the fuel system.

**4.** Start the engine in the vehicle providing the jump start. Let it run a few minutes, then start your engine.

**5.** Remove the negative jumper cable first from your engine, then the battery in the other vehicle.

**6.** Reinstall battery cover to battery base and tighten knobs.

## BATTERY STORAGE

If the machine will be stored for more than 30 days, remove the battery and charge it fully. Either store it on the shelf or on the machine. Leave the cables disconnected if stored on the machine. Store the battery in a cool atmosphere to avoid quick deterioration of the charge in the battery. To prevent battery from freezing, make sure it is fully charged. The specific gravity of a fully charged battery is 1.250.

## BATTERY CARE

**1.** Battery electrolyte level must be properly maintained and the top of the battery kept clean. If the machine is stored in a location where temperatures are extremely high, the battery will run down more rapidly than if the machine is stored in a location where temperatures are cool.

**2.** Keep top of battery clean by washing periodically with a brush dipped in ammonia or bicarbonate of soda solution. Flush the top surface with water after cleaning. Do not remove the fill cap while cleaning.

**3.** Battery cables must be tight on terminals to provide good electrical contact.

**4.** If corrosion occurs at terminals,remove battery cover, disconnect cables, negative (−) cable first and scrape clamps and terminals separately. Reconnect cables, positive (+) cable first and coat terminals with petroleum jelly.

**5.** Check the electrolyte level every 50 operating hours or, if machine is in storage, every 30 days.

**6.** Maintain cell level with distilled or demineralized water. Do not fill cells above the bottom of the fill ring inside each cell.



**CAUTION**

**Wear safety goggles and rubber gloves when working with electrolyte. Charge the battery in a well ventilated place so gasses produced while charging can dissipate. Since the gases are explosive, keep open flames and electrical spark away from the battery; do not smoke. Nausea may result if the gases are inhaled. Unplug charger from electrical outlet before connecting to or disconnecting charger leads from battery posts.**

# MAINTENANCE SCHEDULE

## Minimum Recommended Maintenance Intervals

| Maintenance Procedure | Maintenance Interval & Service | | | | |
|---|---|---|---|---|---|
| | Every 50hrs | Every 100hrs | Every 200hrs | Every 400hrs | Every 800hrs |
| Check Battery Fluid Level | ● | ● | ● | ● | ● |
| Check Battery Cable Connections | ● | ● | ● | ● | ● |
| Check Dust Cup/Baffle | ● | ● | ● | ● | ● |
| Lubricate All Grease Fittings | | ● | ● | ● | ● |
| Inspect Condition and Wear of Tires | | ● | ● | ● | ● |
| ‡ Change Engine Oil and Filter | | ● | ● | ● | ● |
| Inspect Cooling System Hoses | | ● | ● | ● | ● |
| † Check Cable Adjustments | | | ● | ● | ● |
| † Check Alternator and Fan Belts | | | ● | ● | ● |
| Service Air Filter | | | ● | ● | ● |
| Check Engine RPM (idle and full throttle) | | | ● | ● | ● |
| † Torque Wheel Lug Nuts | | | ● | ● | ● |
| Check Front Wheel Alignment | | | | | ● |
| Inspect Service and Parking Brakes | | | | | ● |
| Inspect Fuel Lines | | | | | ● |
| Replace Electric Fuel Pump Filter | | | | | ● |
| Replace Fuel/Water Separator Filter | | | | | ● |
| ‡ Torque Cylinder Head and Adjust Valves | | | | | ● |
| † Replace Transaxle Filter | | | | | ● |
| Change Transaxle Oil | | | | | ● |
| Clean Transaxle Strainer | | | | | ● |
| Pack Front Wheel Bearings | | | | | ● |

† Initial break in at 10 hours

‡ Initial break in at 50 hours

| | |
|---|---|
| Replace all Interlock Switches<br>Coolant System – Flush/Replace Fluid<br>Fuel Tank – Drain/Flush<br>Change Brake Fluid | **<u>Annual Recommendations:</u>**<br>*Items listed are recommended every 1200 hours or 2 years, whichever occurs first.* |

# HYDRAULIC SCHEMATIC

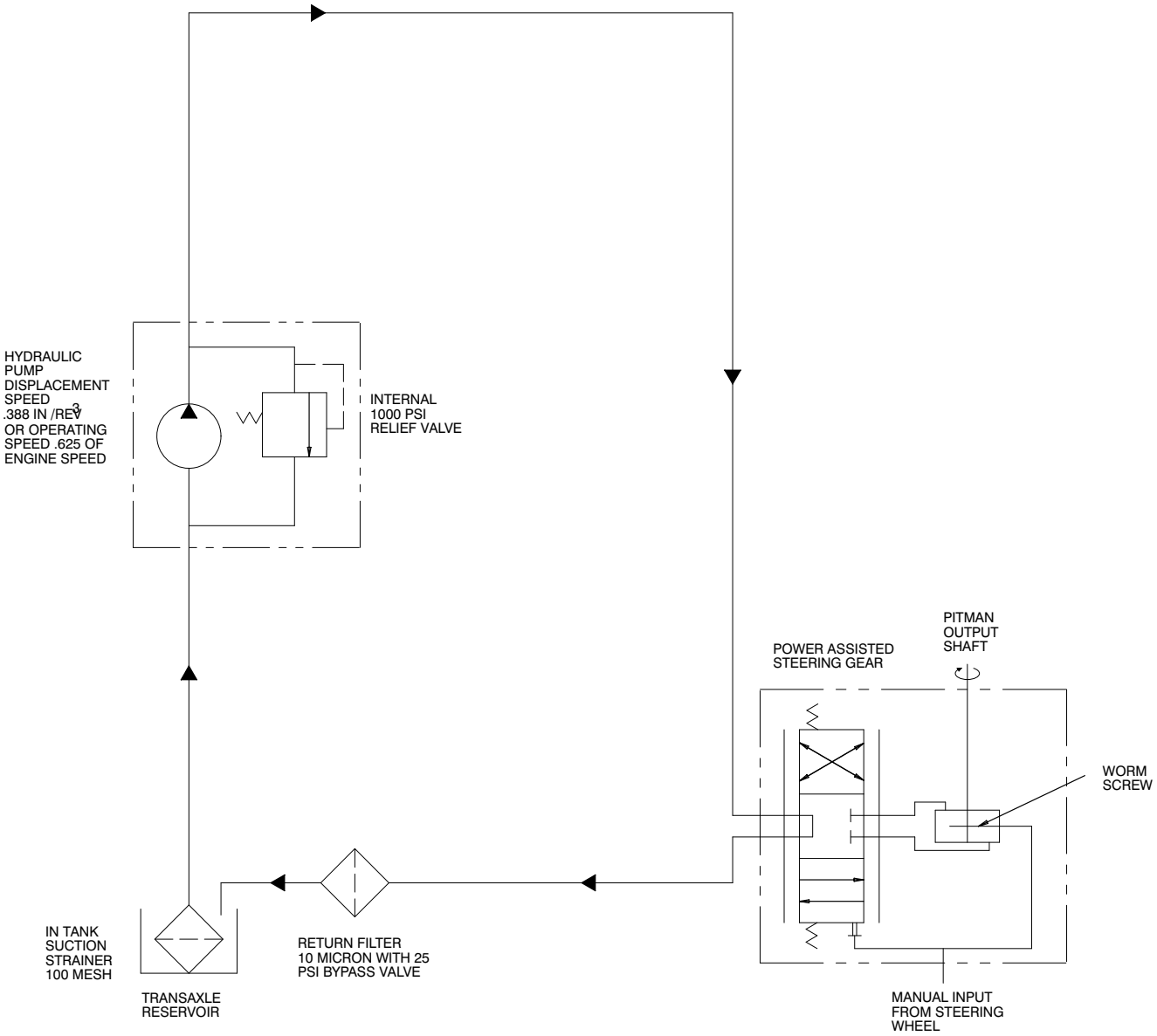


T–3016–1
TORO.99.1051

# ELECTRICAL SCHEMATIC

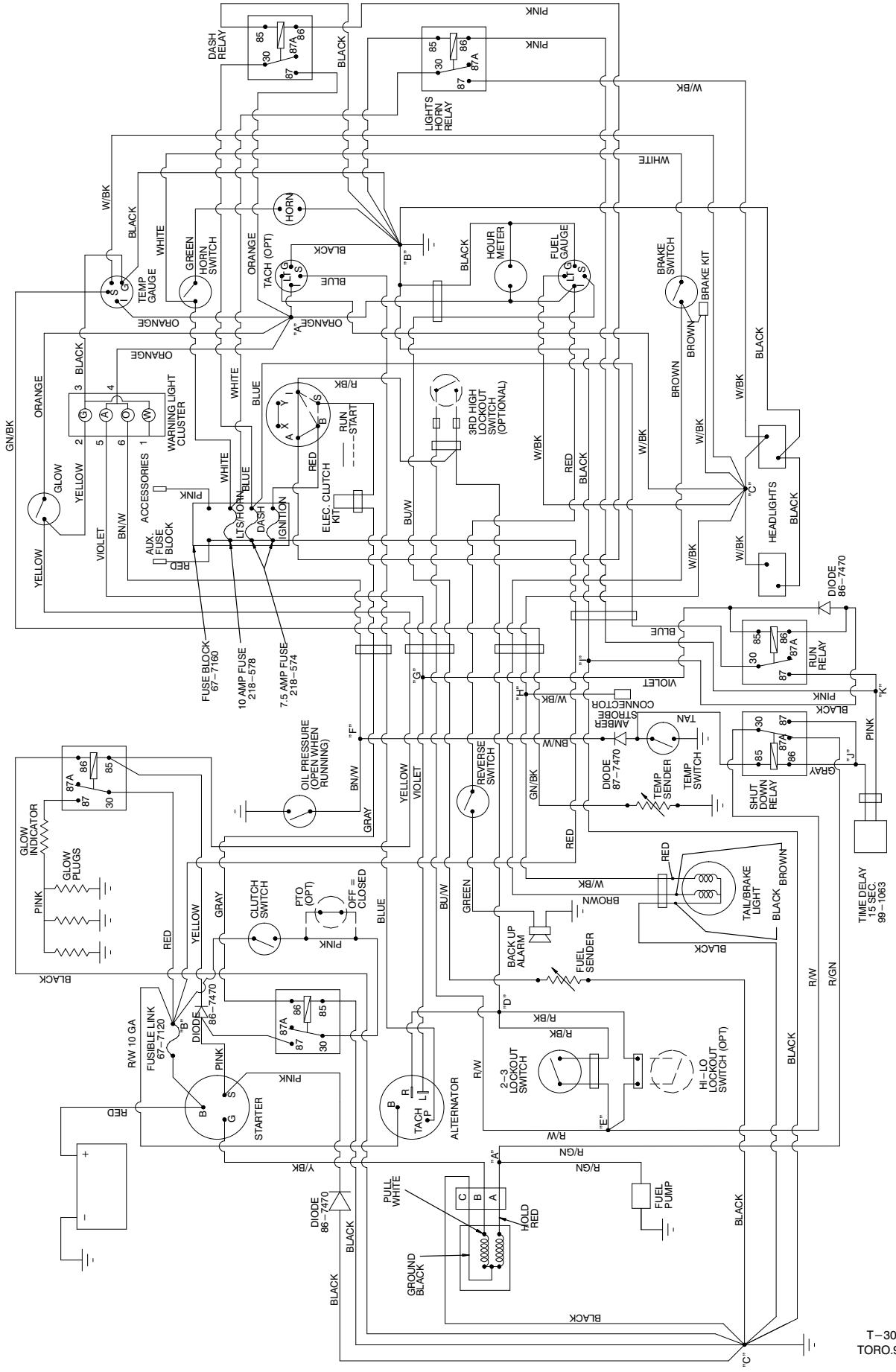

# NOTES

# IDENTIFICATION AND ORDERING

## MODEL AND SERIAL NUMBERS

The WORKMAN® has two identification numbers: a model number and a serial number. These numbers are stamped into a plate located on the right frame member under dash. In any correspondence concerning the unit, supply the model and serial numbers to ensure correct information and replacement parts are obtained.

**Note:** Do not order by reference number if a parts catalog is being used; use the part number.

To order replacement parts from an authorized TORO Distributor, supply the following information:

**1.** Model and serial numbers.

**2.** Part number, description, and quantity of parts desired.

# The Toro Commercial Products Two Year Limited Warranty

**The Toro Company warrants your 1996 or newer Toro Commercial Product ("Product") purchased after January 1, 1997, to be free from defects in materials or workmanship for the period of time listed below. Where a warrantable condition exists, Toro will repair the Product at no cost to you including diagnosis, labor, parts, and transportation. This warranty begins on the date the Product is delivered to the original retail purchaser.**

**Warranty Duration: Two years or 1500 operational hours*, whichever occurs first.**
***Product equipped with hour meter**

**Owner Responsibilities:**

As the Product owner, you are responsible for required maintenance and adjustments stated in your Owner's Manual. Failure to perform required maintenance and adjustments can be grounds for disallowing a warranty claim.

**Instructions for Obtaining Warranty Service:**

You are responsible for notifying the Commercial Products Distributor or Authorized Commercial Products Dealer from whom you purchased the Product as soon as you believe a warrantable condition exists.

If you need help locating a Commercial Products Distributor or Authorized Dealer, or if you have questions regarding your warranty rights or responsibilities, you may contact us at:

Toro Commercial Products Service Department
8111 Lyndale Avenue South
Minneapolis, MN, 55420–1196
Telephone: (612) 888–8801
Facsimile: (612) 887–8258
E–Mail: Commercial.Service@Toro.Com

**Maintenance Parts:**

Parts scheduled for replacement as required maintenance ("Maintenance Parts"), are warranted for the period of time up to the scheduled replacement time for that part.

**Items/Conditions Not Covered:**

Not all product failures or malfunctions that occur during the warranty period are defects in materials or workmanship. The items / conditions listed below are not covered by this warranty:

- Product failures which result from the use of non–Toro replacement parts, or from installation and use of add–on, modified, or unapproved accessories are not covered.
- Product failures which result from failure to perform required maintenance and/or adjustments are not covered.
- Product failures which result from operating the Product in an abusive, negligent or reckless manner are not covered.
- This warranty does not apply to parts subject to consumption through use unless found to be defective. Examples of parts which are consumed, or used up, during normal Product operation include, but are not limited to, blades, reels, bedknives, tines, spark plugs, castor wheels, tires, filters, belts, etc.
- This warranty does not apply to failures caused by outside influence. Items considered to be outside influence include, but are not limited to, weather, storage practices, contamination, use of unapproved coolants, lubricants, additives, or chemicals, etc.
- This warranty does not apply to normal "wear and tear" items. Normal "Wear and Tear" includes, but is not limited to, damage to seats due to wear or abrasion, worn painted surfaces, scratched decals or windows, etc.

**Other Legal Disclaimers:**

The above remedy of product defects through repair by an authorized distributor or dealer is the purchaser's sole remedy for any defect. This warranty gives you specific legal rights, and you may also have other rights which vary from state to state.

**Except for the Emissions warranty referenced below, if applicable, there is no other express warranty. All implied warranties of merchantability and fitness for use are limited to the duration of the express warranty.**

Some states do not allow limitations on how long an implied warranty lasts, so the above limitation may not apply to you.

**The Toro Company is not liable for indirect, incidental or consequential damages in connection with the use of the Product, including any cost or expense of providing substitute Product or service during periods of malfunction or non–use.**

Some states do not allow the exclusion of incidental or consequential damages, so the above exclusion may not apply to you.

**Note to California residents:** The Emissions Control System on your Product may be covered by a separate warranty meeting requirements established by the U.S. Environmental Protection Agency (EPA), or the California Air Resources Board (CARB). The hour limitations set forth above do not apply to the Emissions Control System Warranty. Refer to the California Emission Control Warranty Statement printed in your Owner's Manual or contained in the engine manufacturer's documentation for details.