Form No. 3426-400 Rev A

# 22in Recycler® Lawn Mower with SmartStow®

**Model No. 20339—Serial No. 404320000 and Up**

**Model No. 21329—Serial No. 404320000 and Up**

**Operator's Manual**

# Introduction

This rotary-blade, walk-behind lawn mower is intended to be used by residential homeowners. It is designed primarily for cutting grass on well-maintained lawns on residential properties.

Read this information carefully to learn how to operate and maintain your product properly and to avoid injury and product damage. You are responsible for operating the product properly and safely.

Visit www.Toro.com for more information, including safety tips, training materials, accessory information, help finding a dealer, or to register your product.

Whenever you need service, genuine Toro parts, or additional information, contact an Authorized Service Dealer or Toro Customer Service and have the model and serial numbers of your product ready. Figure 1 identifies the location of the model and serial numbers on the product. Write the numbers in the space provided.

***Important:*** **With your mobile device, you can scan the QR code on the serial number decal (if equipped) to access warranty, parts, and other product information.**

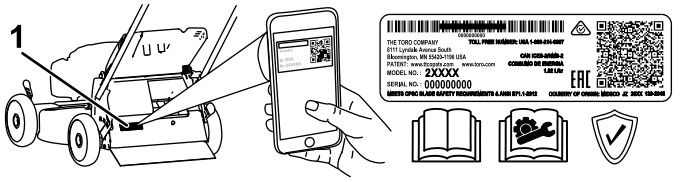


g226621

**Figure 1**

1. Model and serial number location

**Model No.** _____

**Serial No.** _____

This manual identifies potential hazards and has safety messages identified by the safety-alert symbol (Figure 2), which signals a hazard that may cause serious injury or death if you do not follow the recommended precautions.

g000502

**Figure 2**

Safety-alert symbol

This manual uses 2 words to highlight information. **Important** calls attention to special mechanical information and **Note** emphasizes general information worthy of special attention.

It is a violation of California Public Resource Code Section 4442 or 4443 to use or operate the engine on any forest-covered, brush-covered, or grass-covered land unless the engine is equipped with a spark arrester, as defined in Section 4442, maintained in effective working order or the engine is constructed, equipped, and maintained for the prevention of fire.

The enclosed engine owner's manual is supplied for information regarding the US Environmental Protection Agency (EPA) and the California Emission Control Regulation of emission systems, maintenance, and warranty. Replacements may be ordered through the engine manufacturer.

**Gross or Net Torque:** The gross or net torque of this engine was laboratory rated by the engine manufacturer in accordance with the Society of Automotive Engineers (SAE) J1940 or J2723. As configured to meet safety, emission, and operating requirements, the actual engine torque on this class of mower will be significantly lower. Please refer to the engine manufacturer's information included with the machine.

**© 2018—The Toro® Company**
**8111 Lyndale Avenue South**
**Bloomington, MN 55420**

Register at www.Toro.com.

Original Instructions (EN)
**Printed in Mexico**
**All Rights Reserved**

*3426-400* A

**⚠ WARNING**

**CALIFORNIA**
**Proposition 65 Warning**

**The engine exhaust from this product contains chemicals known to the State of California to cause cancer, birth defects, or other reproductive harm.**

**Use of this product may cause exposure to chemicals known to the State of California to cause cancer, birth defects, or other reproductive harm.**

# Contents


Introduction ..... 1
Safety ..... 3
General Safety ..... 3
Safety and Instructional Decals ..... 4
Setup ..... 5
1 Unfolding the Handle ..... 5
2 Installing the Recoil-Starter Rope in the Rope Guide ..... 6
3 Filling the Engine with Oil ..... 7
4 Assembling the Grass Bag ..... 7
Product Overview ..... 9
Operation ..... 9
Before Operation ..... 9
Before Operation Safety ..... 9
Filling the Fuel Tank ..... 10
Checking the Engine-Oil Level ..... 10
Adjusting the Handle Height ..... 11
Adjusting the Cutting Height ..... 11
During Operation ..... 12
During Operation Safety ..... 12
Starting the Engine ..... 13
Using the Self-Propel Drive ..... 13
Shutting Off the Engine ..... 14
Recycling the Clippings ..... 14
Bagging the Clippings ..... 14
Side-Discharging the Clippings ..... 15
Operating Tips ..... 15
After Operation ..... 16
After Operation Safety ..... 16
Cleaning under the Machine ..... 16
Folding the Handle ..... 17
Storing the Machine in the Vertical-Stow Position ..... 17
Maintenance ..... 19
Recommended Maintenance Schedule(s) ..... 19
Maintenance Safety ..... 19
Preparing for Maintenance ..... 19
Servicing the Air Filter ..... 20
Changing the Engine Oil ..... 20
Replacing the Blade ..... 21
Adjusting the Self-Propel Drive ..... 22
Storage ..... 23
Storage Safety ..... 23
Preparing the Machine for Storage ..... 23
Removing the Machine from Storage ..... 23

# Safety

This machine has been designed in accordance with ANSI B71.1-2017.

## General Safety

This product is capable of amputating hands and feet and of throwing objects. Always follow all safety instructions to avoid serious personal injury.

Using this product for purposes other than its intended use could prove dangerous to you and bystanders.

- Read, understand, and follow the instructions and warnings in this *Operator's Manual* and on the machine and attachments before starting the engine.
- Do not put your hands or feet near moving parts of or under the machine. Keep clear of any discharge opening.
- Do not operate the machine without all guards and other safety protective devices in place and functioning properly on the machine.
- Keep bystanders and children out of the operating area. Do not allow children to operate the machine. Allow only people who are responsible, trained, familiar with the instructions, and physically capable to operate the machine.
- Stop the machine, shut off the engine, and wait for all moving parts to stop before servicing, fueling, or unclogging the machine.

Improperly using or maintaining this machine can result in injury. To reduce the potential for injury, comply with these safety instructions and always pay attention to the safety-alert symbol ⚠, which means Caution, Warning, or Danger—personal safety instruction. Failure to comply with these instructions may result in personal injury or death.

# Safety and Instructional Decals

Safety decals and instructions are easily visible to the operator and are located near any area of potential danger. Replace any decal that is damaged or missing.

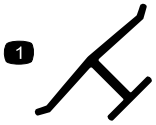


decaloemmarkt

**Manufacturer's Mark**

1. This mark indicates that the blade is identified as a part from the original machine manufacturer.

decal94-8072

**94-8072**

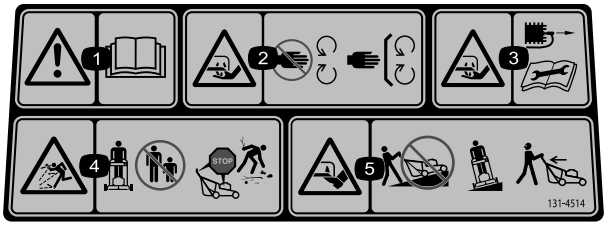


decal131-4514b

**131-4514**

1. Warning—read the *Operator's Manual*.
2. Cutting/dismemberment hazard of hand, mower blade—stay away from moving parts; keep all guards and shields in place.
3. Cutting/dismemberment hazard of hand, mower blade—disconnect the spark-plug wire before performing maintenance.
4. Thrown object hazard—keep bystanders away.
5. Cutting/dismemberment hazard of foot, mower blade—do not operate up and down slopes; operate side to side on slopes; shut off the engine before leaving the machine; pick up any debris before mowing; look behind you when moving in reverse.

decal133-8062

**133-8062**

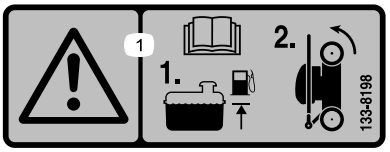


decal133-8198

**133-8198**

1. Warning—read the *Operator's Manual*; 1) Add fuel up to the indicated level. 2) Tip the machine forward for storage.

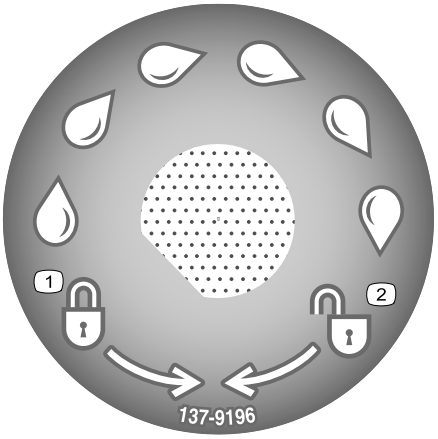


decal137-9196

**137-9196**

1. Lock
2. Unlock

# Setup

***Important:*** **Remove and discard the protective plastic sheet that covers the engine and any other plastic or wrapping on the machine.**

**1**

## Unfolding the Handle

**No Parts Required**

### Procedure

**⚠ WARNING**

**Unfolding the handle improperly can damage the cables, causing an unsafe operating condition.**

- **Do not damage the cable(s) when folding or unfolding the handle.**
- **Ensure that the cable(s) are routed to the outside of the handle.**
- **If a cable is damaged, contact an Authorized Service Dealer.**

***Important:*** **Hold the handle while engaging the handle locks to avoid pinching your hands.**

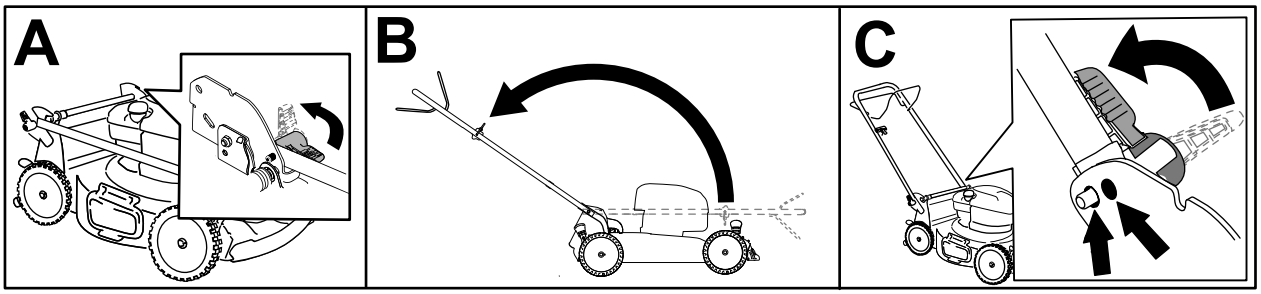


g239997

**Figure 3**

# 2

# Installing the Recoil-Starter Rope in the Rope Guide

**No Parts Required**

## Procedure

***Important:*** **To start the engine safely and easily whenever you use the machine, install the recoil-starter rope in the rope guide.**

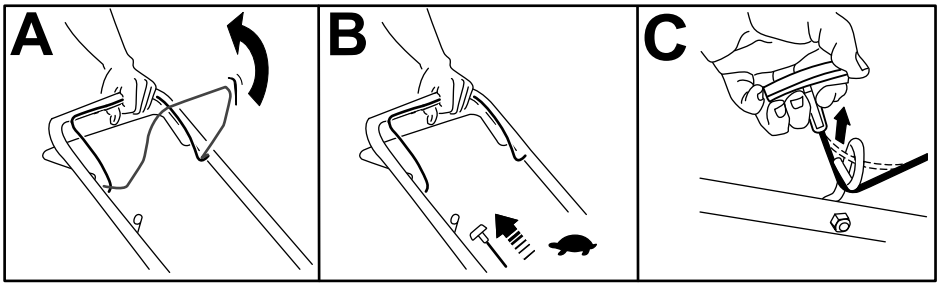


g230180

**Figure 4**

# 3

# Filling the Engine with Oil

**No Parts Required**

## Procedure

***Important:*** **Your machine does not come with oil in the engine, but it does come with a bottle of oil. Before starting the engine, fill the engine with oil.**

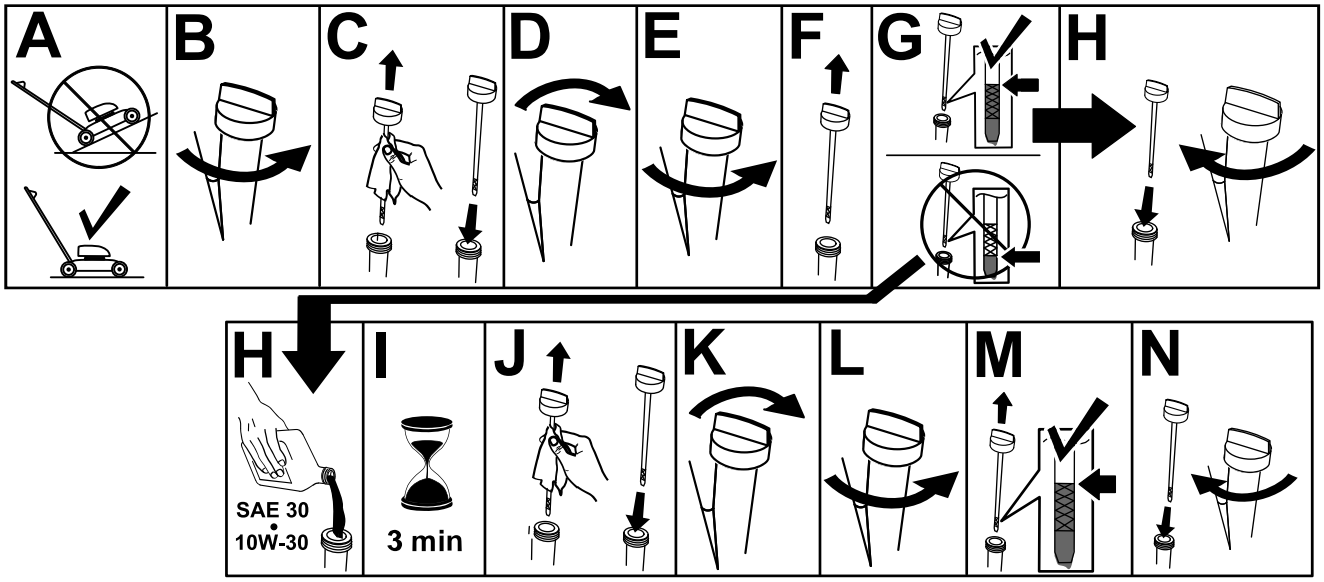


g222533

**Figure 5**

# 4

# Assembling the Grass Bag

**No Parts Required**

## Procedure

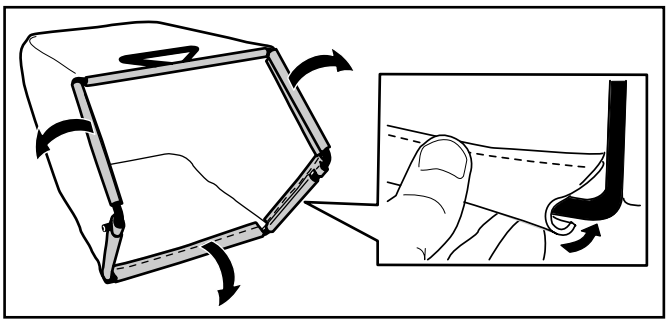

g235791

**Figure 6**

# Product Overview

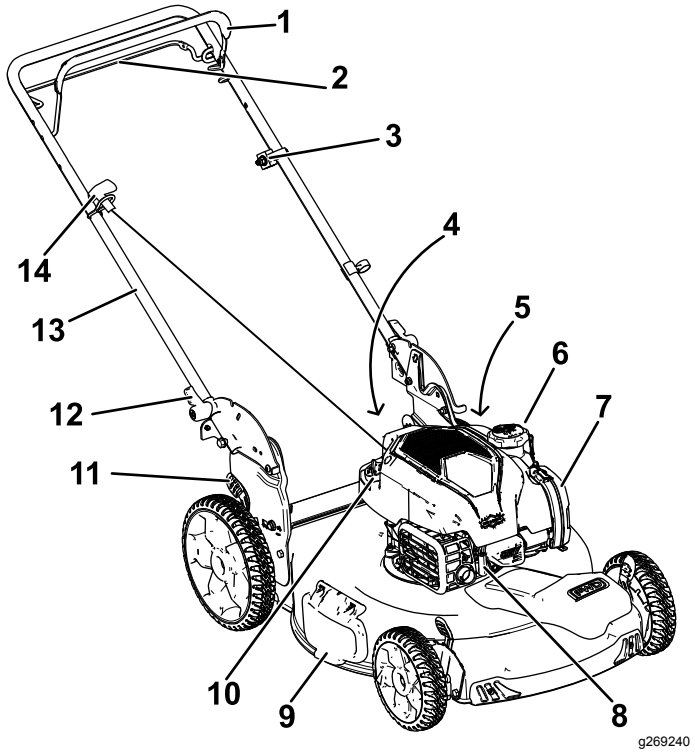


**Figure 7**

| | | | |
|---|---|---|---|
| 1. | Blade-control bar | 8. | Spark plug |
| 2. | Self-propel bar (model 20339 only) | 9. | Side-discharge deflector |
| 3. | Adjustment for the self-propel drive (model 20339 only) | 10. | Oil fill/ dipstick |
| 4. | Rear door (not shown) | 11. | Cutting-height lever (4) |
| 5. | Washout port (not shown) | 12. | Handle lock (2) |
| 6. | Fuel-tank cap | 13. | Handle |
| 7. | Air filter | 14. | Recoil-start handle |

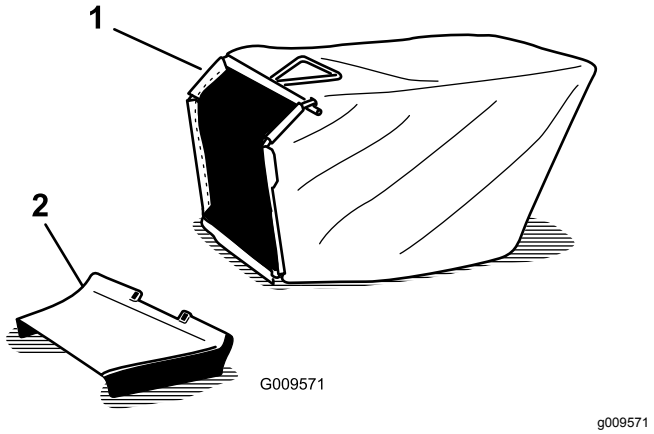


**Figure 8**

| | | | |
|---|---|---|---|
| 1. | Grass bag | 2. | Side-discharge chute |

# Operation

**Note:** Determine the left and right sides of the machine from the normal operating position.

## *Before Operation*

## Before Operation Safety

### General Safety

- Always shut off the machine, wait for all moving parts to stop, and allow the machine to cool before adjusting, servicing, cleaning, or storing it.
- Become familiar with the safe operation of the equipment, operator controls, and safety signs.
- Check that all guards and safety devices, such as deflectors and/or grass catcher, are in place and functioning properly.
- Always inspect the machine to ensure that the blades and blade bolts are not worn or damaged.
- Inspect the area where you will use the machine, and remove all objects that could interfere with the operation of the machine or that the machine could throw.
- Contact with the moving blade will cause serious injury. Do not put your fingers under the housing when adjusting the cutting height.

### Fuel Safety

- Fuel is extremely flammable and highly explosive. A fire or explosion from fuel can burn you and others and can damage property.
  - To prevent a static charge from igniting the fuel, place the container and/or machine directly on the ground before filling, not in a vehicle or on an object.
  - Fill the fuel tank outdoors, in an open area, when the engine is cold. Wipe up any fuel that spills.
  - Do not handle fuel when smoking or around an open flame or sparks.
  - Do not remove the fuel cap or add fuel to the tank while the engine is running or hot.
  - If you spill fuel, do not attempt to start the engine. Avoid creating a source of ignition until the fuel vapors have dissipated.
  - Store fuel in an approved container and keep it out of the reach of children.
- Fuel is harmful or fatal if swallowed. Long-term exposure to vapors can cause serious injury and illness.

– Avoid prolonged breathing of vapors.
– Keep your hands and face away from the nozzle and the fuel-tank opening.
– Keep fuel away from your eyes and skin.

# Filling the Fuel Tank

- For best results, use only clean, fresh, unleaded gasoline with an octane rating of 87 or higher ((R+M)/2 rating method).
- Oxygenated fuel with up to 10% ethanol or 15% MTBE by volume is acceptable.
- **Do not** use ethanol blends of gasoline, such as E15 or E85, with more than 10% ethanol by volume. Performance problems and/or engine damage may result, which may not be covered under warranty.
- **Do not** use gasoline containing methanol.
- **Do not** store fuel either in the fuel tank or in fuel containers over the winter unless fuel stabilizer has been added to the fuel.
- **Do not** add oil to gasoline.

Fill the fuel tank with fresh unleaded regular gasoline from a major name-brand service station (Figure 9).

***Important:*** **To reduce starting problems, add fuel stabilizer/conditioner to fresh fuel as directed by the fuel-stabilizer manufacturer.**

Refer to your engine owner's manual for additional information.

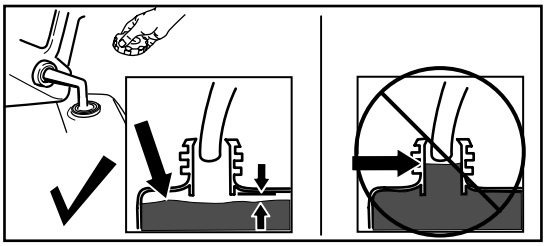

g230458

**Figure 9**

# Checking the Engine-Oil Level

**Service Interval:** Before each use or daily

***Important:*** **If the oil level in the crankcase is too low or too high and you run the engine, you may damage the engine.**

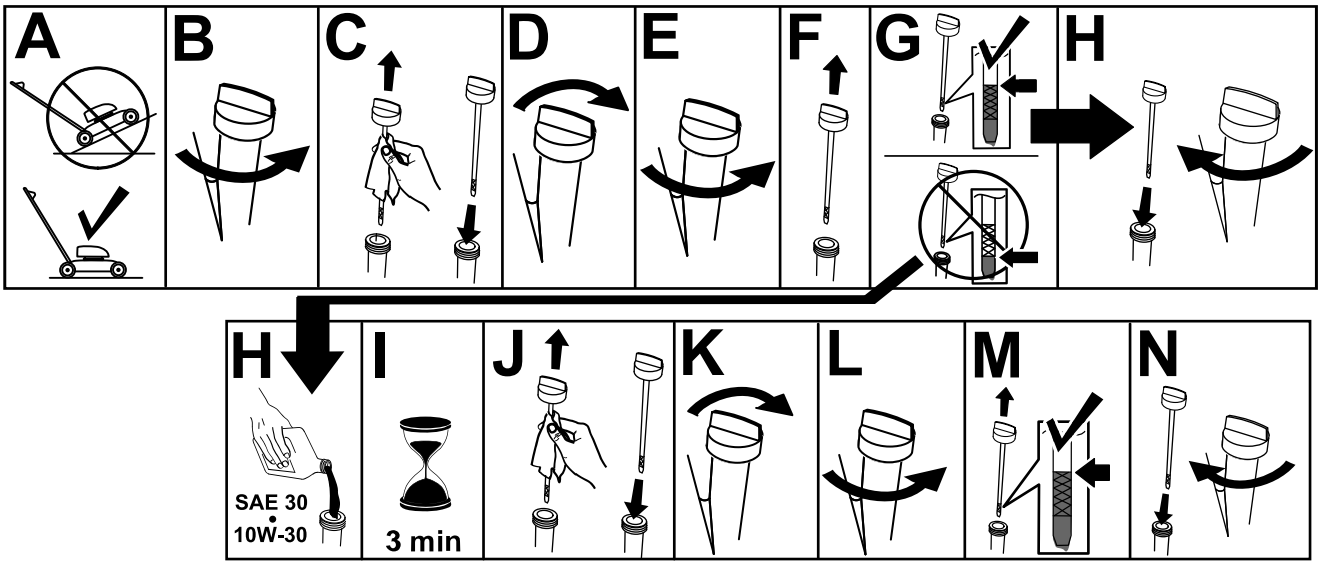


g231765

**Figure 10**

# Adjusting the Handle Height

You may raise or lower the handle to a position comfortable for you.

Rotate the handle lock, move the handle to 1 of 2 positions, and lock the handle into position (Figure 11).

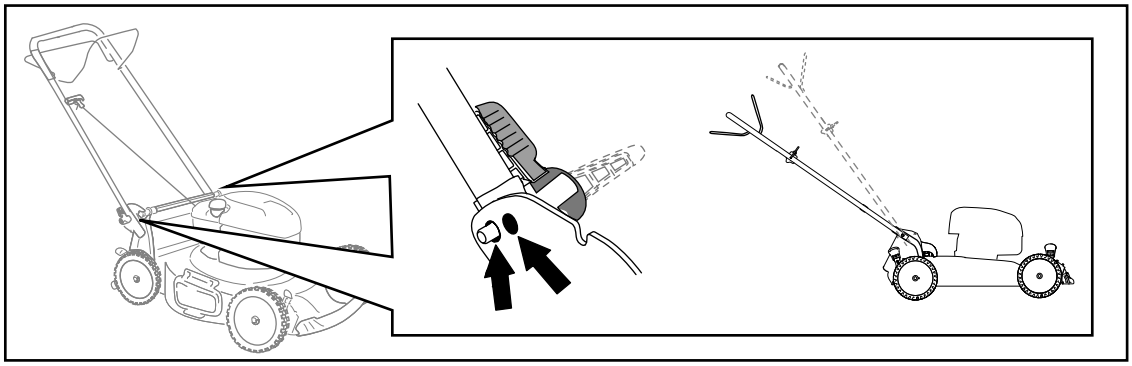

g269729

**Figure 11**

# Adjusting the Cutting Height

**⚠ CAUTION**

**If the engine has been running, the muffler will be hot and can severely burn you.**

**Keep away from the hot muffler.**

Adjust the cutting height as desired. Set all wheels to the same cutting height (Figure 12).

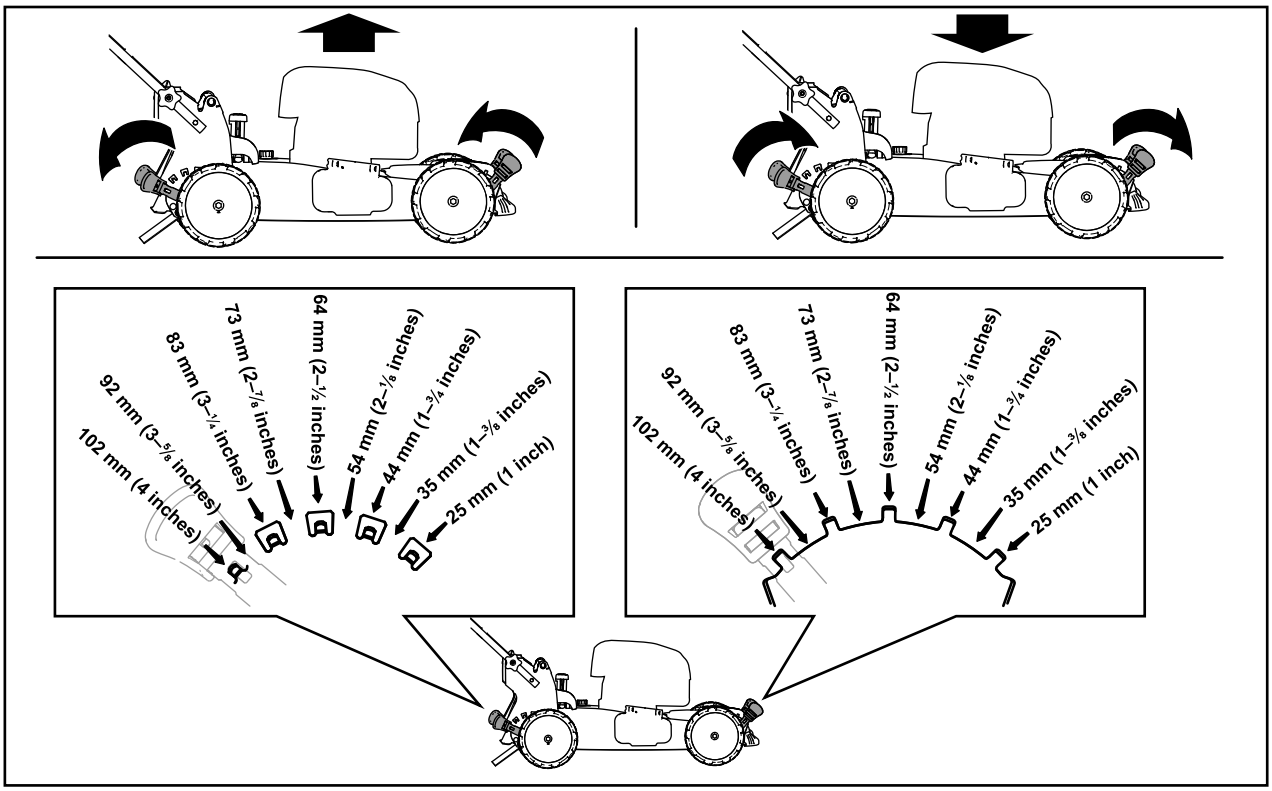


g254132

**Figure 12**

# *During Operation*

# During Operation Safety

## General Safety

- Wear appropriate clothing, including eye protection; long pants; substantial, slip-resistant footwear; and hearing protection. Tie back long hair and do not wear loose clothing or loose jewelry.
- Use your full attention while operating the machine. Do not engage in any activity that causes distractions; otherwise, injury or property damage may occur.
- Do not operate the machine while ill, tired, or under the influence of alcohol or drugs.
- The blade is sharp; contacting the blade can result in serious personal injury. Shut off the engine and wait for all moving parts to stop before leaving the operating position.
- When you release the blade-control bar, the engine should shut off and the blade should stop within 3 seconds. If not, stop using your machine immediately and contact an Authorized Service Dealer.
- Keep bystanders out of the operating area. Keep small children out of the operating area and under the watchful care of a responsible adult who is not operating the machine. Stop the machine if anyone enters the area.
- Always look down and behind you before moving the machine in reverse.
- Operate the machine only in good visibility and appropriate weather conditions. Do not operate the machine when there is the risk of lightning.
- Wet grass or leaves can cause serious injury if you slip and contact the blade. Avoid mowing in wet conditions.
- Use extreme care when approaching blind corners, shrubs, trees, or other objects that may block your view.
- Do not direct the discharge material toward anyone. Avoid discharging material against a wall or obstruction; material may ricochet toward you. Stop the blade(s) when crossing gravel surfaces.
- Watch for holes, ruts, bumps, rocks, or other hidden objects. Uneven terrain could cause you to lose your balance or footing.
- If the machine strikes an object or starts to vibrate, immediately shut off the engine, wait for all moving parts to stop, and disconnect the wire from the spark plug before examining the machine for damage. Make all necessary repairs before resuming operation.
- Before leaving the operating position, shut off the engine and wait for all moving parts to stop.
- If the engine has been running, it will be hot and can severely burn you. Keep away from the hot engine.
- Operate the engine only in well-ventilated areas. Exhaust gases contain carbon monoxide, which is lethal if inhaled.
- Check the grass catcher components and the discharge chute frequently for any wear or deterioration and replace them with genuine Toro parts when necessary.

## Slope Safety

- Mow across the face of slopes; never up and down. Use extreme caution when changing direction on slopes.
- Do not mow on excessively steep slopes. Poor footing could cause a slip-and-fall accident.
- Mow with caution near drop-offs, ditches, or embankments.

# Starting the Engine

1. Hold the blade-control bar against the handle (A of Figure 13).
2. Pull the recoil-start handle (B of Figure 13).

   **Note:** When you pull the recoil-start handle, pull it lightly until you feel resistance, then pull it sharply. Allow the rope to return to the handle slowly.

   **Note:** If the machine does not start after several attempts, contact an Authorized Service Dealer.

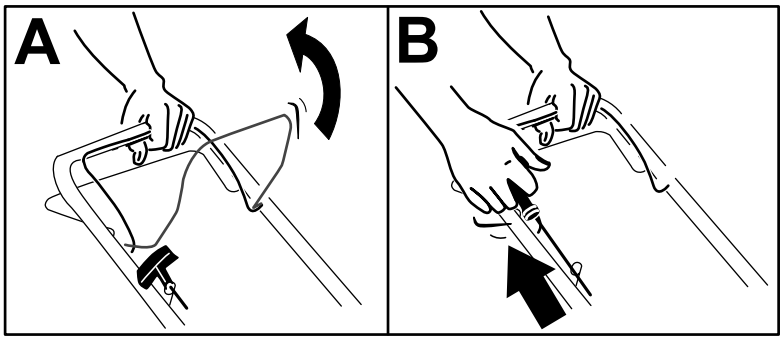


g230255

**Figure 13**

# Using the Self-Propel Drive

## For Self-Propel-Drive Models Only

- **To engage the self-propel drive, pull the self-propel-drive bar to the handle and hold it (Figure 14).**

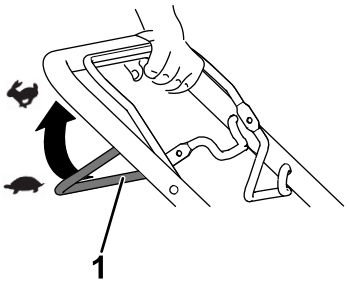


g240765

**Figure 14**

1. Self-propel-drive bar

**Note:** The maximum self-propel-drive speed is fixed. To reduce the speed, increase the space between the self-propel-drive bar and the handle.

- **To disengage the self-propel-drive, release the self-propel drive bar.**

  **Note:** To reduce the ground speed, increase the space between the self-propel drive bar and the handle.

# Shutting Off the Engine

**Service Interval:** Before each use or daily

To shut off the engine, release the blade-control bar.

***Important:*** **When you release the blade-control bar, both the engine and blade should stop within 3 seconds. If they do not stop properly, stop using your machine immediately and contact an Authorized Service Dealer.**

# Recycling the Clippings

Your machine comes from the factory ready to recycle the grass and leaf clippings back into the lawn.

If the grass bag is on the machine, remove it; refer to Removing the Grass Bag (page 14). If the side-discharge chute is on the machine, remove it; refer to Removing the Side-Discharge Chute (page 15).

# Bagging the Clippings

Use the grass bag when you want to collect grass and leaf clippings from the lawn.

If the side-discharge chute is on the machine, remove it; refer to Removing the Side-Discharge Chute (page 15).

## Installing the Grass Bag

1. Raise and hold up the rear deflector (A of Figure 15).
2. Install the grass bag, ensuring that the pins on the bag rest in the notches on the handle (B of Figure 15).
3. Lower the rear deflector.

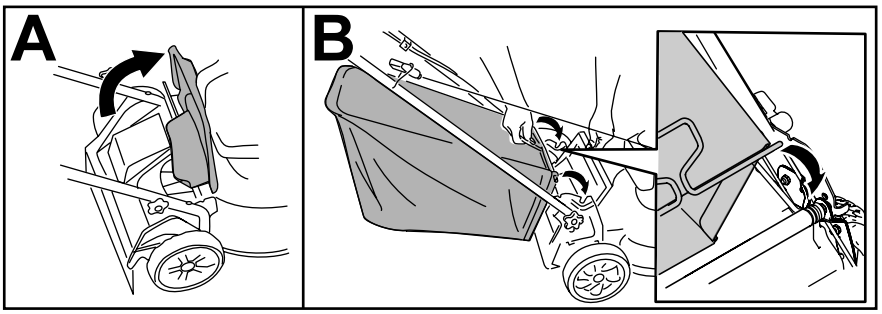


g235812

**Figure 15**

## Removing the Grass Bag

To remove the bag, reverse the steps in Installing the Grass Bag (page 14).

# Side-Discharging the Clippings

Use side discharging for cutting very tall grass.

If the grass bag is on the machine, remove it; refer to Removing the Grass Bag (page 14).

## Installing the Side-Discharge Chute

Lift up the side deflector and install the side-discharge chute (A and B Figure 16).

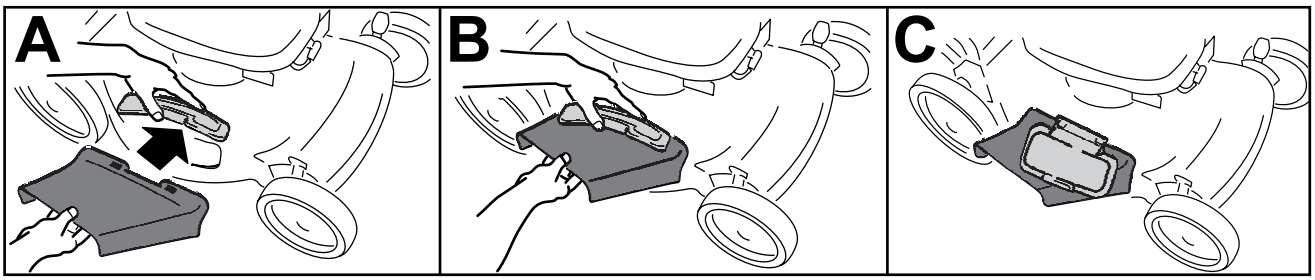


g233435

**Figure 16**

## Removing the Side-Discharge Chute

To remove the side-discharge chute, lift up the side deflector, remove the side-discharge chute, and lower the side-discharge deflector.

# Operating Tips

## General Mowing Tips

- Inspect the area where you will use the machine and remove all objects that the machine could throw.
- Avoid striking solid objects with the blade. Never deliberately mow over any object.
- If the machine strikes an object or starts to vibrate, immediately shut off the engine, remove the key (if equipped), disconnect the wire from the spark plug, and examine the machine for damage.
- For best performance, install a new blade before the cutting season begins.
- Replace the blade when necessary with a Toro replacement blade.

## Cutting Grass

- Cut only about a third of the grass blade at a time. Do not cut below 51 mm (2 inches) unless the grass is sparse or it is late fall when grass growth begins to slow down.
- When cutting grass over 15 cm (6 inches) tall, mow at the highest cutting height setting and walk slower; then mow again at a lower setting for the best lawn appearance. If the grass is too long, the machine may plug and cause the engine to stall.
- Wet grass and leaves tend to clump on the yard and can cause the machine to plug or the engine to stall. Avoid mowing in wet conditions.
- Be aware of a potential fire hazard in very dry conditions, follow all local fire warnings, and keep the machine free of dry grass and leaf debris.
- Alternate the mowing direction. This helps disperse the clippings over the lawn for even fertilization.
- If the finished lawn appearance is unsatisfactory, try 1 or more of the following:
  - Replace the blade or have it sharpened.
  - Walk at a slower pace while mowing.
  - Raise the cutting height on your machine.
  - Cut the grass more frequently.
  - Overlap cutting swaths instead of cutting a full swath with each pass.

## Cutting Leaves

- After cutting the lawn, ensure that half of the lawn shows through the cut leaf cover. You may need to make more than a single pass over the leaves.
- If there are more than 13 cm (5 inches) of leaves on the lawn, mow at a higher cutting height and then again at the desired cutting height.
- Slow down your mowing speed if the machine does not cut the leaves finely enough.

# After Operation

## After Operation Safety

### General Safety

- Always shut off the machine, wait for all moving parts to stop, and allow the machine to cool before adjusting, servicing, cleaning, or storing it.
- Clean grass and debris from the machine to help prevent fires. Clean up oil or fuel spills.
- Never store the machine or fuel container where there is an open flame, spark, or pilot light, such as on a water heater or on other appliances.

### Hauling Safety

- Use care when loading or unloading the machine.
- Secure the machine from rolling.

## Cleaning under the Machine

**Service Interval:** Before each use or daily

### Cleaning under the Machine Using the Washout Port

For best results, clean the machine soon after you have completed mowing.

1. Move the machine onto a flat paved surface.
2. Shut off the engine and wait for all moving parts to stop before leaving the operating position.
3. Lower the machine to its lowest cutting-height setting. Refer to Adjusting the Cutting Height (page 11).
4. Wash out the area under the rear door where the clippings go from the underside of the machine to the grass bag.

   **Note:** Wash out the area with the bag-on-demand (if equipped) in both the fully forward and fully rearward positions.
5. Attach a garden hose that is connected to a water supply to the washout port (Figure 17).

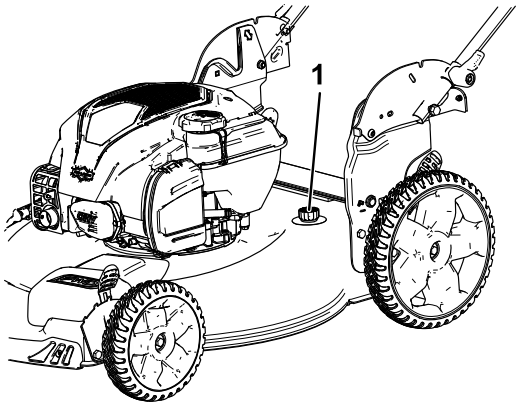


**Figure 17**

1. Washout port

6. Turn the water on.
7. Start the engine and run it until the clippings no longer come out from under the machine.
8. Shut off the engine.
9. Shut off the water and disconnect the garden hose from the machine.
10. Start the engine and run it for a few minutes to dry the underside of the machine to prevent it from rusting.
11. Shut off the engine and allow it to cool before storing the machine in an enclosed area.

### Cleaning under the Machine in the Vertical-stow Position

1. Set the machine in the vertical-stow position; refer to Storing the Machine in the Vertical-Stow Position (page 17).
2. Wash out the clippings from under the machine.

# Folding the Handle

**⚠ WARNING**

**Folding or unfolding the handle improperly can damage the cables, causing an unsafe operating condition.**

- **Do not damage the cables when folding or unfolding the handle.**
- **If a cable is damaged, contact an Authorized Service Dealer.**

1. Hold the handle while disengaging the handle locks to avoid pinching your hands.
2. Disengage the handle locks until you can move the upper handle freely.
3. Fold the handle forward either to the vertical position or the fully forward position as shown in Figure 18.

   ***Important:*** **Route the cables to the outside of the handle locks as you fold the handle.**

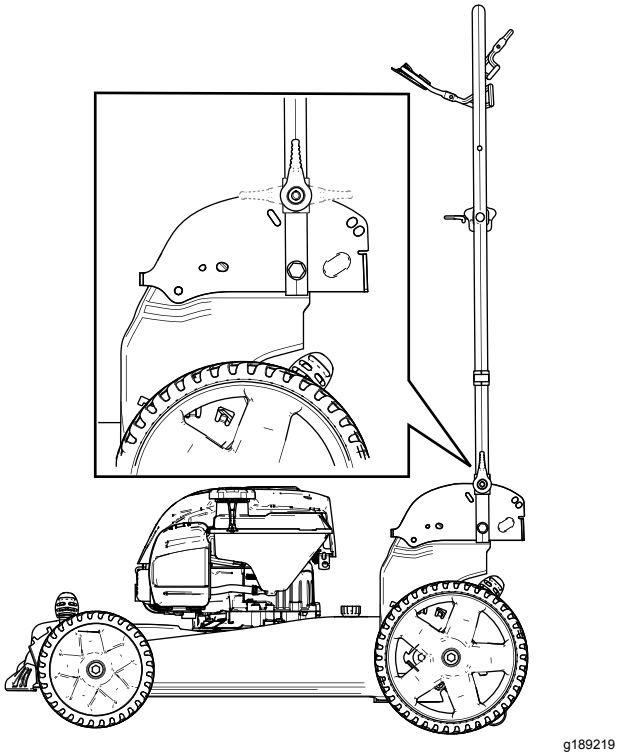


**Figure 18**

4. To unfold the handle, refer to 1 Unfolding the Handle (page 5).

# Storing the Machine in the Vertical-Stow Position

During the mowing season or in the off-season, you can store your machine in the vertical position to minimize storage space.

**⚠ DANGER**

**Fuel is extremely flammable and explosive. A fire or explosion from fuel can burn you and others.**

- **Storing the machine in the vertical position when there is too much fuel in the fuel tank may cause fuel to leak from the fuel tank. Fuel is extremely flammable and explosive. A fire or explosion from fuel can burn you and others.**
- **Store the machine in the vertical position only when the level of fuel in the fuel tank is no higher than what is recommended in this *Operator's Manual*.**
- **Do not store the machine in a position that is beyond the vertical (90°) position; otherwise, fuel may escape from the fuel tank.**
- **Do not transport the machine in the vertical-stow position.**
- **Do not attempt to start the machine in the vertical-stow position.**
- **Do not attempt to store any machine with fuel and oil in the vertical-stow position that is not designed for that purpose.**

**⚠ WARNING**

**Folding or unfolding the handle improperly can damage the cables, causing an unsafe operating condition.**

- **Do not damage the cables when folding or unfolding the handle.**
- **If a cable is damaged, contact an Authorized Service Dealer.**

1. Ensure that the level of fuel in the fuel tank is no higher than what is recommended by the engine manufacturer; refer to the engine manufacturer's decal on the engine (Figure 19).

   **Note:** If there is the level of fuel in the fuel tank is too high, drain the fuel from the fuel tank into an approved fuel container until it is at or below the level recommended by the engine manufacturer.

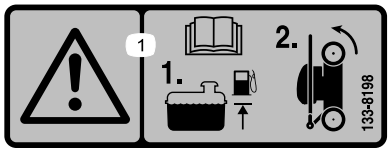


decal133-8198

**Figure 19**

2. Ensure that the cutting-height setting on the machine is 92 mm (3-5/8 inches) or lower. If it is not, lower it; refer to Adjusting the Cutting Height (page 11).
3. Disengage the handle locks (Figure 20).

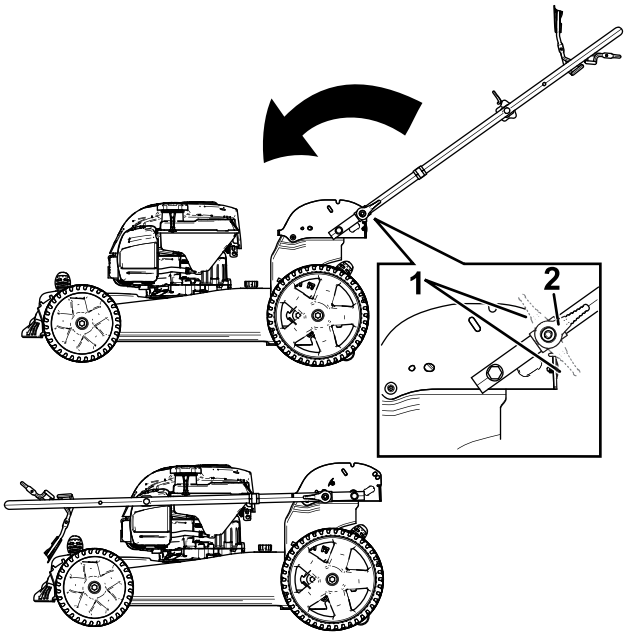


g189218

**Figure 20**

1. Handle lock disengaged positions
2. Handle lock engaged position

4. Fold the handle fully forward (Figure 20).

   ***Important:*** **Route the cables to the outside of the handle knobs as you fold the handle.**
5. Engage the handle locks.
6. Lift the front of the machine by the handle and move it into a storage space (Figure 21).

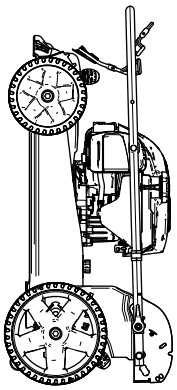

g189217

**Figure 21**

# Maintenance

## Recommended Maintenance Schedule(s)

| Maintenance Service Interval | Maintenance Procedure |
|---|---|
| Before each use or daily | • Check the engine-oil level and add oil as needed.<br>• Ensure that the engine shuts off within 3 seconds after releasing the blade-control bar.<br>• Clean grass clippings and dirt from under the machine. |
| Yearly | • Service the air filter; service it more frequently in dusty operating conditions.<br>• Change the engine oil (if desired).<br>• Replace the blade or have it sharpened (more frequently if the edge dulls quickly).<br>• Clean the engine by removing dirt and debris from its top and sides; clean it more frequently in dusty operating conditions. |
| Yearly or before storage | • Empty the fuel tank before repairs as directed and before yearly storage. |

***Important:*** **Refer to your engine owner's manual for additional maintenance procedures.**

## Maintenance Safety

- Disconnect the spark-plug wire from the spark plug before performing any maintenance procedure.
- Wear gloves and eye protection when servicing the machine.
- The blade is sharp; contacting the blade can result in serious personal injury. Wear gloves when servicing the blade. Do not repair or alter the blade(s).
- Never tamper with safety devices. Check their proper operation regularly.
- Tipping the machine may cause the fuel to leak. Fuel is flammable and explosive, and can cause personal injury. Run the engine dry or remove the fuel with a hand pump; never siphon the fuel.
- To ensure optimum performance of the machine, use only genuine Toro replacement parts and accessories. Replacement parts and accessories made by other manufacturers could be dangerous, and such use could void the product warranty.

## Preparing for Maintenance

1. Shut off the engine and wait for all moving parts to stop.
2. Disconnect the spark-plug wire from the spark plug (Figure 22).

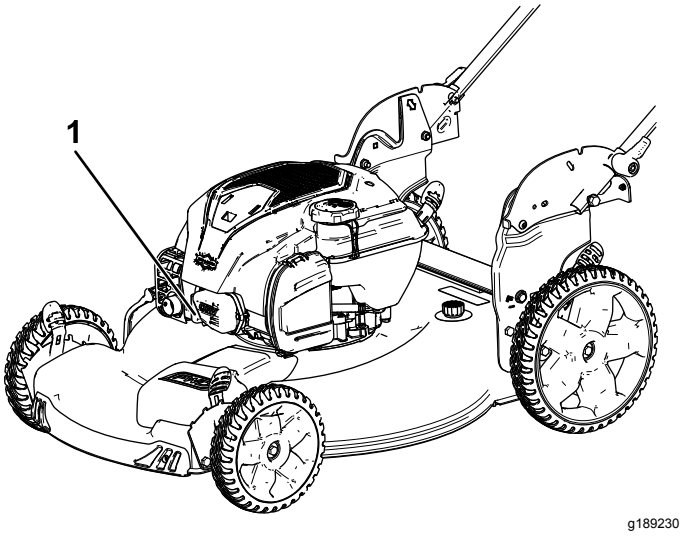


**Figure 22**

1. Spark-plug wire

3. After performing the maintenance procedure(s), connect the spark-plug wire to the spark plug.

   ***Important:*** **Before tipping the machine to change the oil or replace the blade, allow the fuel tank to run dry through normal usage. If you must tip the machine prior to running out of fuel, use a hand fuel pump to remove the fuel. Always tip the machine onto its side, with the dipstick down.**

# Servicing the Air Filter

**Service Interval:** Yearly

1. Unclip the top of the air-filter cover (Figure 23).

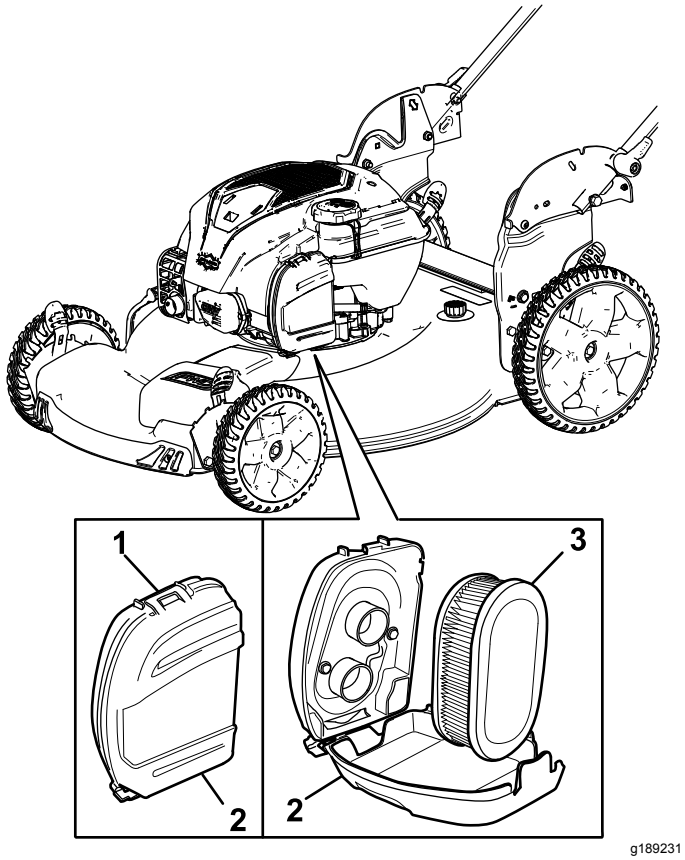


**Figure 23**

1. Clip
2. Air-filter cover
3. Air filter

2. Remove the air filter (Figure 23).
3. Inspect the air filter.

   **Note:** If the air filter is excessively dirty, replace it with a new filter. Otherwise, gently tap the air filter on a hard surface to loosen debris.
4. Install the air filter.
5. Use the clip to install the air-filter cover.

# Changing the Engine Oil

**Service Interval:** Yearly

**Changing the engine oil is not required, but if you want to change the oil, use the following procedure.**

**Note:** Run the engine a few minutes before changing the oil to warm it. Warm oil flows better and carries more contaminants.

## Engine Oil Specifications

| | |
|---|---|
| **Engine oil capacity** | 0.44 L (15 fl oz) |
| **Oil viscosity** | SAE 30 or SAE 10W-30 detergent oil |
| **API service classification** | SJ or higher |

1. Move the machine to a level surface.
2. Refer to Preparing for Maintenance (page 19).
3. Remove the dipstick by rotating the cap counterclockwise and pulling it out (Figure 24).

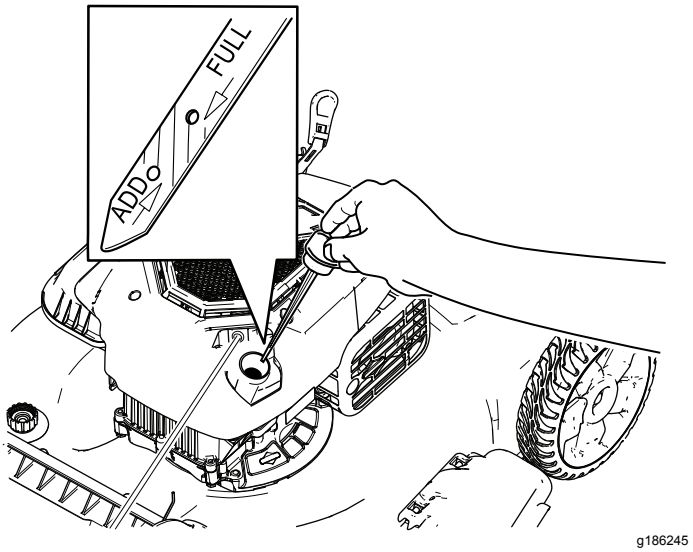


**Figure 24**

4. Tip the machine onto its side (so that the air filter is up) to drain the used oil from the oil-fill tube (Figure 25).

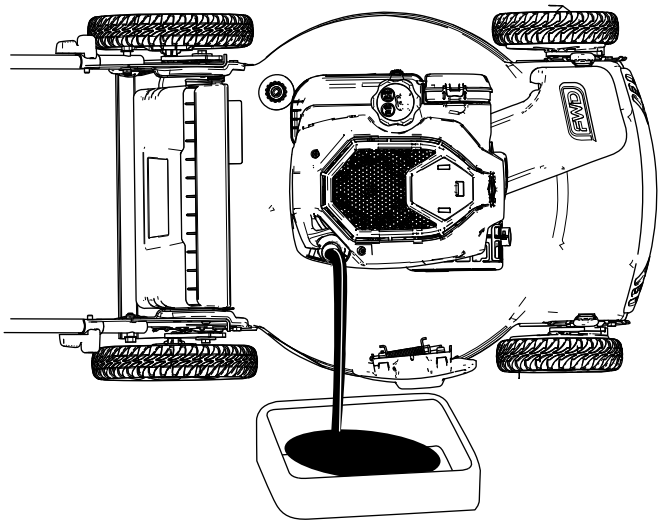

g189232

**Figure 25**

5. After draining the used oil, return the machine to the operating position.
6. Carefully pour about 3/4 of the engine capacity of oil into the oil-fill tube.
7. Wait 3 minutes for the oil to settle in the engine.
8. Wipe the dipstick clean with a clean cloth.
9. Insert the dipstick into the oil-fill tube, then remove the dipstick.
10. Read the oil level on the dipstick (Figure 24).
    - If the oil level on the dipstick is too low, carefully pour a small amount of oil into the oil-fill tube, wait 3 minutes, and repeat steps 8 through 10 until the oil level on the dipstick is correct.
    - If the oil level on the dipstick is too high, drain the excess oil until the oil level on the dipstick is correct.

    ***Important:*** **If the oil level in the engine is too low or too high and you run the engine, you may damage the engine.**
11. Install the dipstick into the oil-fill tube securely.
12. Recycle the used oil properly.

# Replacing the Blade

**Service Interval:** Yearly

***Important: You will need a torque wrench to install the blade properly*. If you do not have a torque wrench or are uncomfortable performing this procedure, contact an Authorized Service Dealer.**

Examine the blade whenever you run out of fuel. If the blade is damaged or cracked, replace it immediately. If the blade edge is dull or nicked, have it sharpened and balanced, or replace it.

**⚠ WARNING**

**The blade is sharp; contacting the blade can result in serious personal injury.**

**Wear gloves when servicing the blade.**

1. Refer to Preparing for Maintenance (page 19).
2. Tip the machine onto its side with the air filter up.
3. Use a block of wood to hold the blade steady (Figure 26).

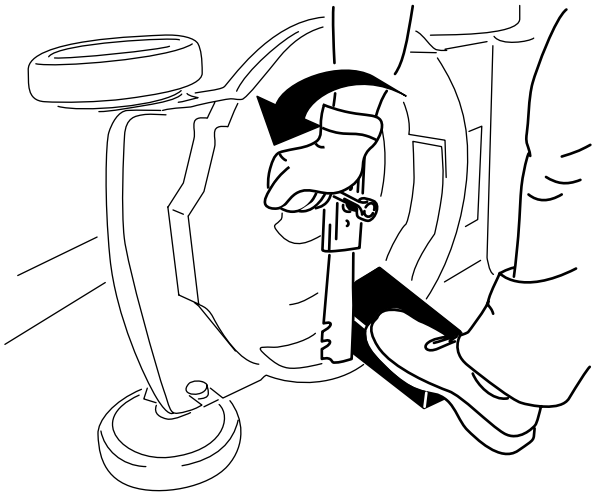

g231389

**Figure 26**

4. Remove the blade, saving all mounting hardware (Figure 26).
5. Install the new blade and all mounting hardware (Figure 27).

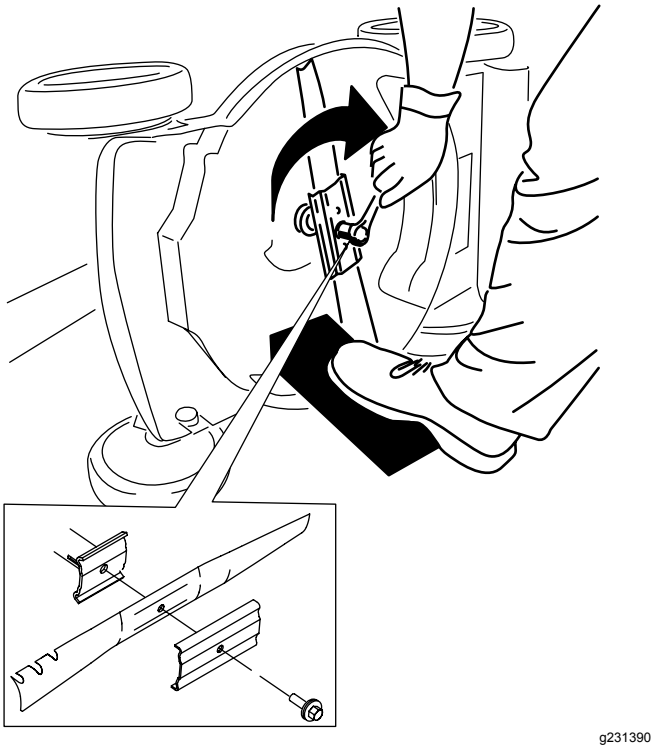


**Figure 27**

***Important:*** **Position the curved ends of the blade to point toward the machine housing.**

6. **Use a torque wrench to tighten the blade bolt to 82 N·m (60 ft-lb).**

   ***Important:*** **A bolt torqued to 82 N·m (60 ft-lb) is very tight. While holding the blade with a block of wood, put your weight behind the ratchet or wrench and tighten the bolt securely. This bolt is very difficult to overtighten.**

# Adjusting the Self-Propel Drive

## For Self-Propel-Drive Models Only

Whenever you install a new self-propel cable or if the self-propel drive is out of adjustment, adjust the self-propel drive.

1. Turn the adjustment nut counterclockwise to loosen the cable adjustment (Figure 28).

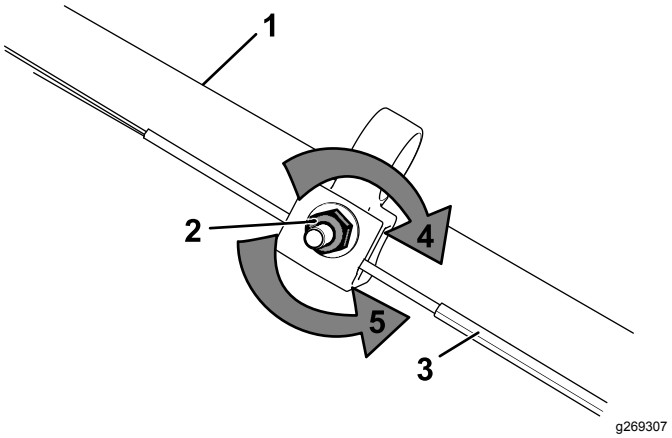


**Figure 28**

1. Handle (left side)
2. Adjustment nut
3. Self-propel-drive cable
4. Turn the nut clockwise to tighten the adjustment.
5. Turn the nut counterclockwise to loosen the adjustment.

2. Adjust the tension on the cable (Figure 28) by pulling it back or pushing it forward and holding that position.

   **Note:** Push the cable toward the engine to increase the traction; pull the cable away from the engine to decrease the traction.

3. Turn the adjustment nut clockwise to tighten the cable adjustment.

   **Note:** Tighten the nut firmly with a socket or wrench.

# Storage

Store the machine in a cool, clean, dry place.

## Storage Safety

Always shut off the machine, wait for all moving parts to stop, and allow the machine to cool before adjusting, servicing, cleaning, or storing it.

## Preparing the Machine for Storage

1. On the last refueling of the year, add fuel stabilizer (such as Toro Premium Fuel Treatment) to the fuel as directed on the label.
2. Dispose of any unused fuel properly. Recycle it according to local codes or use it in your automobile.

   ***Important:*** **Old fuel in the fuel tank is the leading cause of hard starting. Do not store the fuel without fuel stabilizer more than 30 days, and do not store stabilized fuel beyond the duration recommended by the fuel-stabilizer manufacturer.**
3. Run the machine until the engine shuts off from running out of fuel.
4. Start the engine again and allow it to run until it shuts off. When you can no longer start the engine, it is sufficiently dry.
5. Disconnect the wire from the spark plug and connect the wire to the retaining post (if equipped).
6. Remove the spark plug, add 30 ml (1 fl oz) of engine oil through the spark-plug hole, and pull the starter rope slowly several times to distribute oil throughout the cylinder to prevent cylinder corrosion during the off-season.
7. Loosely install the spark plug.
8. Tighten all nuts, bolts, and screws.

## Removing the Machine from Storage

1. Check and tighten all fasteners.
2. Remove the spark plug and spin the engine rapidly by pulling the recoil-start handle to blow the excess oil from the cylinder.
3. Install the spark plug and tighten it with a torque wrench to 20 N·m (15 ft-lb).
4. Perform any maintenance procedures; refer to Maintenance (page 19).
5. Check the engine-oil level; refer to Checking the Engine-Oil Level (page 10).
6. Fill the fuel tank with fresh fuel; refer to Filling the Fuel Tank (page 10).
7. Connect the wire to the spark plug.

# California Proposition 65 Warning Information

## What is this warning?

You may see a product for sale that has a warning label like the following:

**WARNING:** Cancer and Reproductive Harm—www.p65Warnings.ca.gov.

## What is Prop 65?

Prop 65 applies to any company operating in California, selling products in California, or manufacturing products that may be sold in or brought into California. It mandates that the Governor of California maintain and publish a list of chemicals known to cause cancer, birth defects, and/or other reproductive harm. The list, which is updated annually, includes hundreds of chemicals found in many everyday items. The purpose of Prop 65 is to inform the public about exposure to these chemicals.

Prop 65 does not ban the sale of products containing these chemicals but instead requires warnings on any product, product packaging, or literature with the product. Moreover, a Prop 65 warning does not mean that a product is in violation of any product safety standards or requirements. In fact, the California government has clarified that a Prop 65 warning "is not the same as a regulatory decision that a product is 'safe' or 'unsafe.'" Many of these chemicals have been used in everyday products for years without documented harm. For more information, go to https://oag.ca.gov/prop65/faqs-view-all.

A Prop 65 warning means that a company has either (1) evaluated the exposure and has concluded that it exceeds the "no significant risk level"; or (2) has chosen to provide a warning based on its understanding about the presence of a listed chemical without attempting to evaluate the exposure.

## Does this law apply everywhere?

Prop 65 warnings are required under California law only. These warnings are seen throughout California in a wide range of settings, including but not limited to restaurants, grocery stores, hotels, schools, and hospitals, and on a wide variety of products. Additionally, some online and mail order retailers provide Prop 65 warnings on their websites or in catalogs.

## How do the California warnings compare to federal limits?

Prop 65 standards are often more stringent than federal and international standards. There are various substances that require a Prop 65 warning at levels that are far lower than federal action limits. For example, the Prop 65 standard for warnings for lead is 0.5 µg/day, which is well below the federal and international standards.

## Why don't all similar products carry the warning?

- Products sold in California require Prop 65 labelling while similar products sold elsewhere do not.
- A company involved in a Prop 65 lawsuit reaching a settlement may be required to use Prop 65 warnings for its products, but other companies making similar products may have no such requirement.
- The enforcement of Prop 65 is inconsistent.
- Companies may elect not to provide warnings because they conclude that they are not required to do so under Prop 65; a lack of warnings for a product does not mean that the product is free of listed chemicals at similar levels.

## Why does Toro include this warning?

Toro has chosen to provide consumers with as much information as possible so that they can make informed decisions about the products they buy and use. Toro provides warnings in certain cases based on its knowledge of the presence of one or more listed chemicals without evaluating the level of exposure, as not all the listed chemicals provide exposure limit requirements. While the exposure from Toro products may be negligible or well within the "no significant risk" range, out of an abundance of caution, Toro has elected to provide the Prop 65 warnings. Moreover, if Toro does not provide these warnings, it could be sued by the State of California or by private parties seeking to enforce Prop 65 and subject to substantial penalties.