Form No. 3371-259 Rev D

TORO®

Count on it.

Parts Catalog

Workman® HDX 4-Wheel Drive Utility Vehicle with Bed

Model No. 07370—Serial No. 312000001 and Up

Register at www.Toro.com.
Original Instructions (EN)

3371-259 D

Ordering Replacement Parts

To order replacement parts, please supply the part number, the quantity, and the description of each part desired.

Understanding Reference Numbers

Each identified part in an illustration has a reference number. The reference number for a part also appears in the parts list, along with other information about the part.

This catalog uses two special reference number formats, one to indicate parts in a service assembly and another to indicate the quantity of a given part in an illustration.

Service Assembly Reference Numbers

Parts in service assemblies have reference numbers in the form a:b. The a represents the reference number of the entire service assembly and the b represents a sequential number unique to each part within the service assembly.

For example, a wheel assembly might be identified by reference number 6, the tire by 6:1, the valve by 6:2, and the wheel by 6:3. When you order the assembly identified by reference number 6, you receive all parts identified by reference numbers 6:1,6:2, and 6:3. However, you may also order any part individually. Reference numbers of this type appear in illustration and in parts lists.

Reference Numbers Indicating Quantity

In an illustration, if a reference number indicates more than one part, the reference number has the form nX y. The n represents the quantity of the part, the X is the multiplication symbol, and the y represents the reference number.

For example, in an illustration, the reference number 2X 37 means that two of the parts identified by reference number 37 are indicated.

Contents

Hood and Bumper Assembly 5
Dash Assembly 6
Pedal Assembly 8
Master Cylinder Assembly No. 104-6782 9
Hydraulic Brake Line Assembly 10
Clutch Linkage Assembly 11
Shroud and Seat Assembly 12
Console Assembly 14
Shift Assembly No. 106-7887 16
Steering Hydraulic Assembly 17
Steering Valve Assembly No. 115-7926 18
Lift Valve and Hydraulic Assembly 19
Control Valve Assembly No. 43-1950 21
Hydraulic Cylinder Assembly No. 106-7939 22
Front Wheel Assembly 23
Brake Caliper Assembly No. 119-9535 24
Hydraulic Cylinder Assembly No. 114-8349 25
Steering Linkage Assembly 26
Front Suspension Assembly 27
Front Control Arm Assembly 28
Rear Frame Assembly 29
Rear Axle Assembly 30
Driveshaft Assembly No. 114-8367 31
Transaxle Assembly 32
Case Assembly 4 Wheel Drive Transaxle Assembly No. 115-2175 33
Center Plate Assembly 4 Wheel Drive Transaxle Assembly No. 115-2175 34
Main Shaft Assembly 4 Wheel Drive Transaxle Assembly No. 115-2175 35
Reduction Shaft Assembly 4 Wheel Drive Transaxle Assembly No. 115-2175 36
Reverse Shaft Assembly 4 Wheel Drive Transaxle Assembly No. 115-2175 37
Main Shift Assembly 4 Wheel Drive Transaxle Assembly No. 115-2175 38
Hi-Lo Shift Assembly 4 Wheel Drive Transaxle Assembly No. 115-2175 39
Countershaft Assembly 4 Wheel Drive Transaxle Assembly No. 115-2175 40
Differential Gear Assembly 4 Wheel Drive Transaxle Assembly No. 115-2175 41
Differential Carrier Assembly 4 Wheel Drive Transaxle Assembly No. 115-2175 42
Differential Lock Assembly 4 Wheel Drive Transaxle Assembly No. 115-2175 43
Axle Shaft Assembly 4 Wheel Drive Transaxle Assembly No. 115-2175 44
Front Drive Assembly 4 Wheel Drive Transaxle Assembly No. 115-2175 45
Battery Assembly 46
Tail Light and Fender Assembly 47
Roll-Over Protection System Assembly 48
Air Cleaner Assembly 49
Air Cleaner Assembly No. 106-2416 50
Cooling System Assembly 51
Radiator Assembly 52
Engine Support Assembly 53
Hydraulic Gear Pump Assembly No. 114-8302 54
ECM and Relay Assembly 55
Engine Assembly 56
Fuel System Assembly 57
4 Wheel Drive Assembly 58
Differential Assembly No. 119-0824 59
Drive Shaft Assembly No. 115-2171 60
Full Bed and Side Panel Assembly 61
Cylinder Assembly 62

© 2018—The Toro® Company
8111 Lyndale Avenue South
Bloomington, MN 55420

Contact us at www.Toro.com.
Printed in the USA.
All Rights Reserved

Contents (continued)

Crankshaft Assembly 63
Cylinder Head Assembly 64
Manifold Assembly 65
Carburetor Assembly 66
Camshaft Assembly 67
Oil Pan Assembly 68
Gear Cover Assembly 69
Gear Housing Assembly 70
Water Pump Assembly 71
Controls Assembly 72
Starter Motor Assembly 73
Alternator Assembly 74
Engine Gasket Set 75
Engine Label Set 76
Attachments and Accessories 77

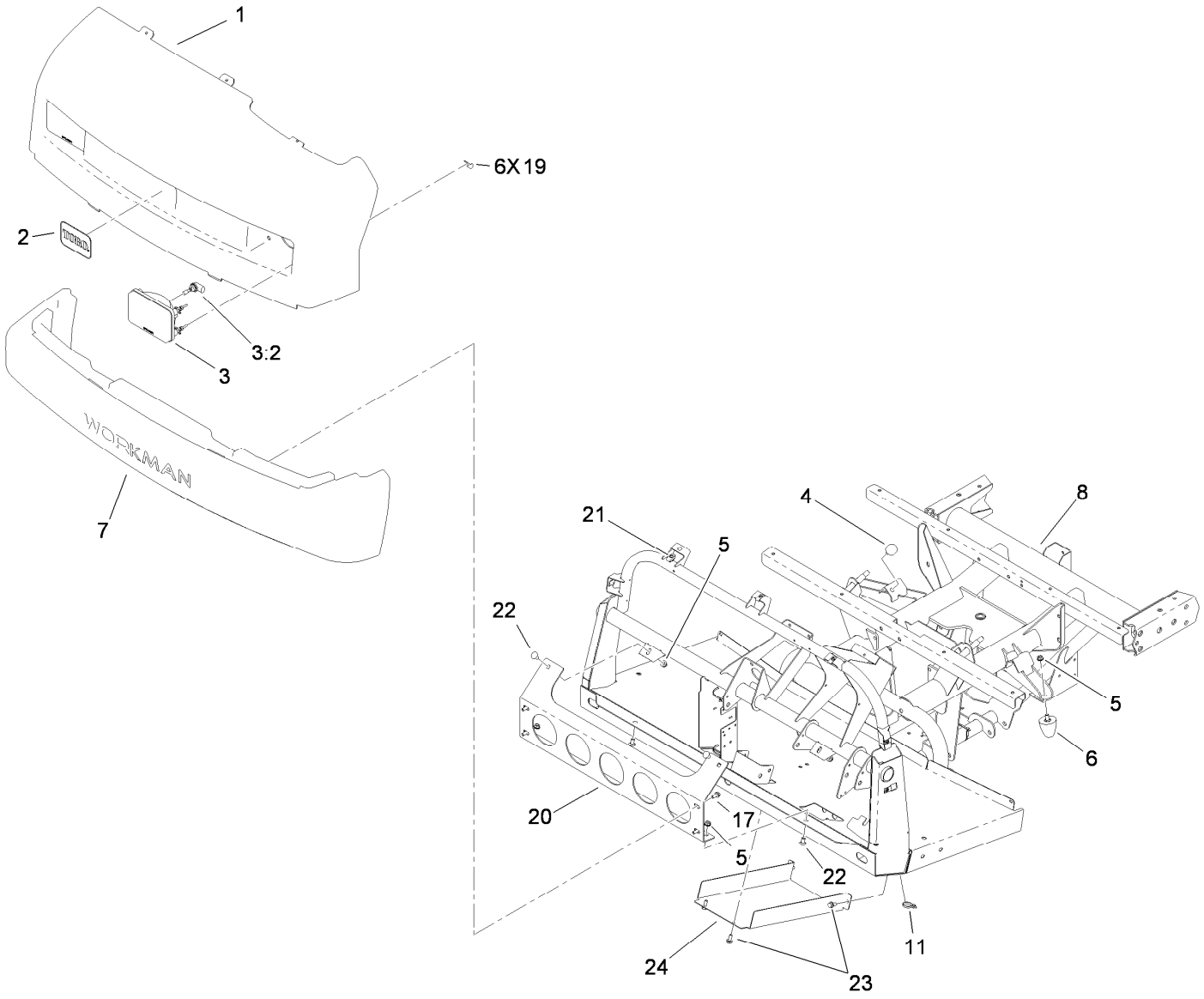

Hood and Bumper Assembly

Ref.	Part Number	Qty.	Description
1	112-3183	1	Hood
2	117-4950	1	Decal
3	114-8322	2	Headlight ASM
3:2	115-2395	1	Bulb-Light
4	87-2440	2	Bumper-Rubber
5	3290-357	6	Nut-HHF, Whiz
6	26-0071	2	Snubber-Rubber
7	112-3185	1	Bumper
8	119-0949-03	1	Frame-Front

Ref.	Part Number	Qty.	Description
11	3290-379	1	Tie-Cable
17	3234-5	4	Screw-HHF
19	114-8341	6	Clip-Speed
20	114-8272-03	1	Bracket-Bumper
21	94-2413	7	Nut-U
22	3231-21	4	Screw-CARR
23	32144-11	4	Screw-Thd Roll, HWH
24	106-2427-03	1	Cover

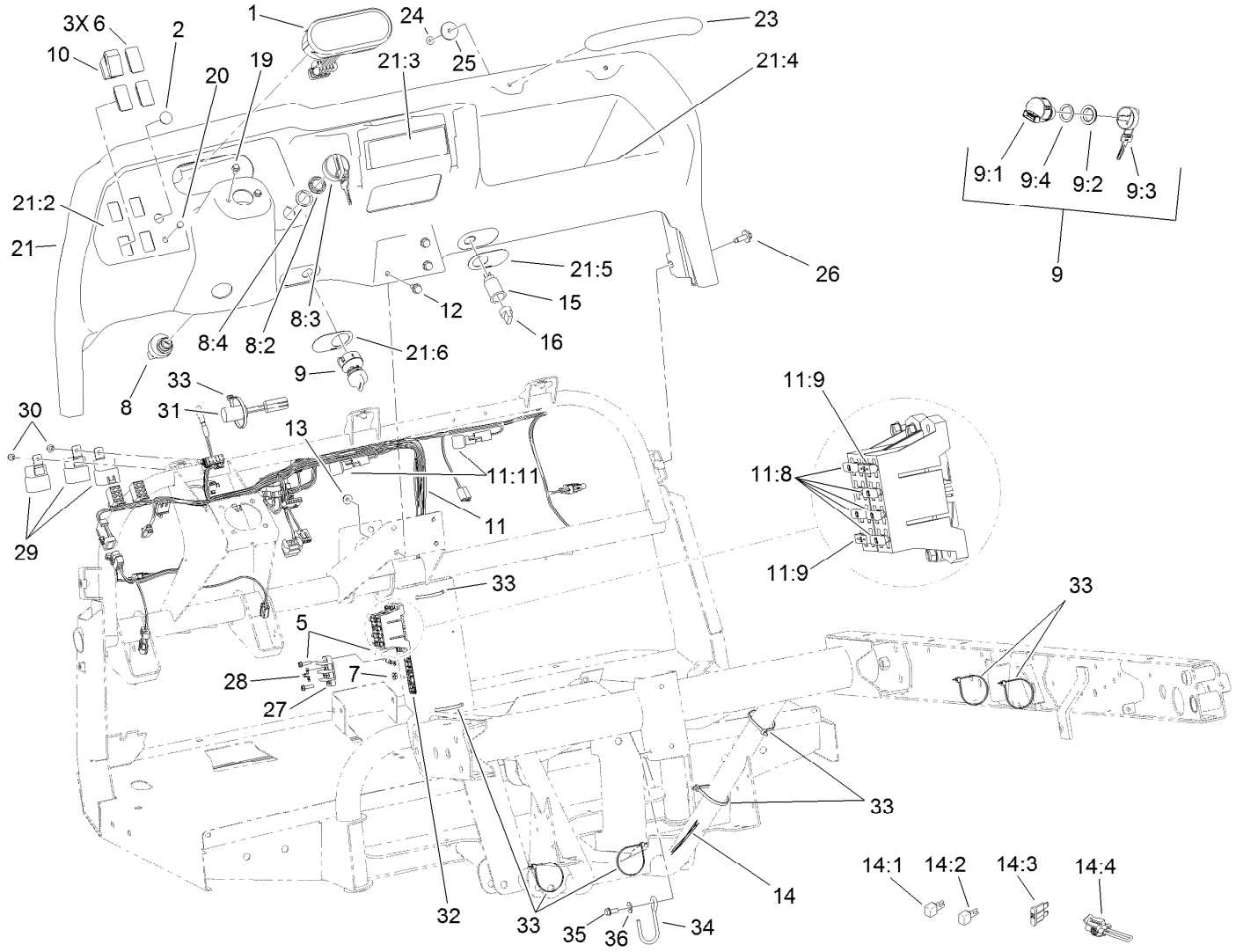

Dash Assembly

Ref.	Part Number	Qty.	Description
1	120-4801	1	Cluster-Instrument (L/C)
2	94-5627	1	Plug
5	32105-13	6	Screw-HWH
6	99-7420	3	Plug-Hole
7	3290-148	6	Nut-HF
8	106-5269	1	Ignition Switch ASM
8:2	108-8660	1	Nut-Mounting
8:3	106-5270	1	Ignition Key Set
8:4	108-8659	1	Washer-Backup
9	110-2580	1	Switch-Key, Supervisor
9:1		1	Switch-Key ●
9:2	108-8660	1	Nut-Mounting
9:3	110-5221	1	Set-Key, Supervisor
9:4	108-8659	1	Washer-Backup
10	95-8999	1	Switch
11	120-3990	1	Harness-Wire, Front
11:8	218-578	5	Fuse-Blade, 10 Amp
11:9	109355	2	Fuse-Blade, 15 Amp

Ref.	Part Number	Qty.	Description
11:11	100-4918	2	Diode
12	3234-5	3	Screw-HHF
13	104-8300	3	Nut-HF, NI
14	114-8376	1	Harness-Wire, Rear
14:1	100-4918	2	Diode
14:2	104-4022	1	Resistor-75 Ohm
14:3	109103	1	Fuse-Blade, 30 Amp
14:4	119-7787	1	Harness-Wire, Vertical Lift Shunt
15	99-7411	1	Point-Power
16	99-7416	1	Cap
19	33103-012	2	Screw-HHF
20	104-9368	1	Plug-Dome
21	115-7912	1	Dash ASM
21:2	115-2281	1	Decal-Dash
21:3	115-7746	1	Decal-Danger
21:4	115-2282	1	Decal-Warning, Dash
21:5	106-2353	1	Decal-Powerpoint

● Not serviced separately

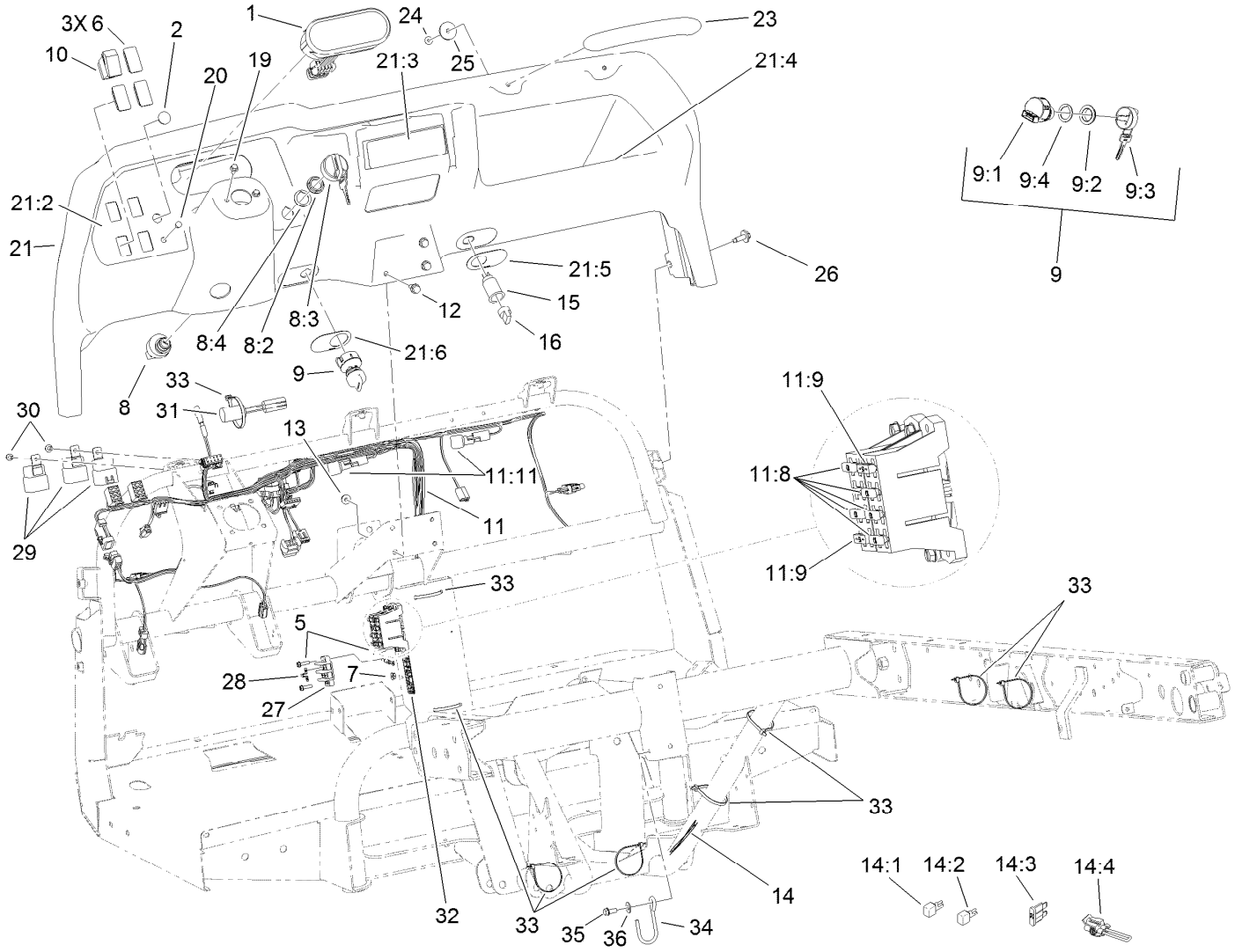

Dash Assembly (continued)

Ref.	Part Number	Qty.	Description
21:6	106-2355	1	Decal-Switch, Supervisor
23	117-4948	1	Handle-Grab
24	104-7201	2	Nut-HF
25	103995	2	Washer
26	114-8418	7	Screw-HWH, Sems
27	42862	1	Block-Terminal, Ground
28	42863	1	Strip-Jumper
29	99-7430	3	Relay-Mini

Ref.	Part Number	Qty.	Description
30	32144-10	2	Screw-HWH
31	83-2280	1	Timer-Delay
32	115-7813	1	Decal-Fuse
33	3290-379	9	Tie-Cable
34	117-4860	1	Guide-Cable
35	32144-11	1	Screw-Thd Roll, HWH
36	3256-71	1	Washer-Flat

● Not serviced separately

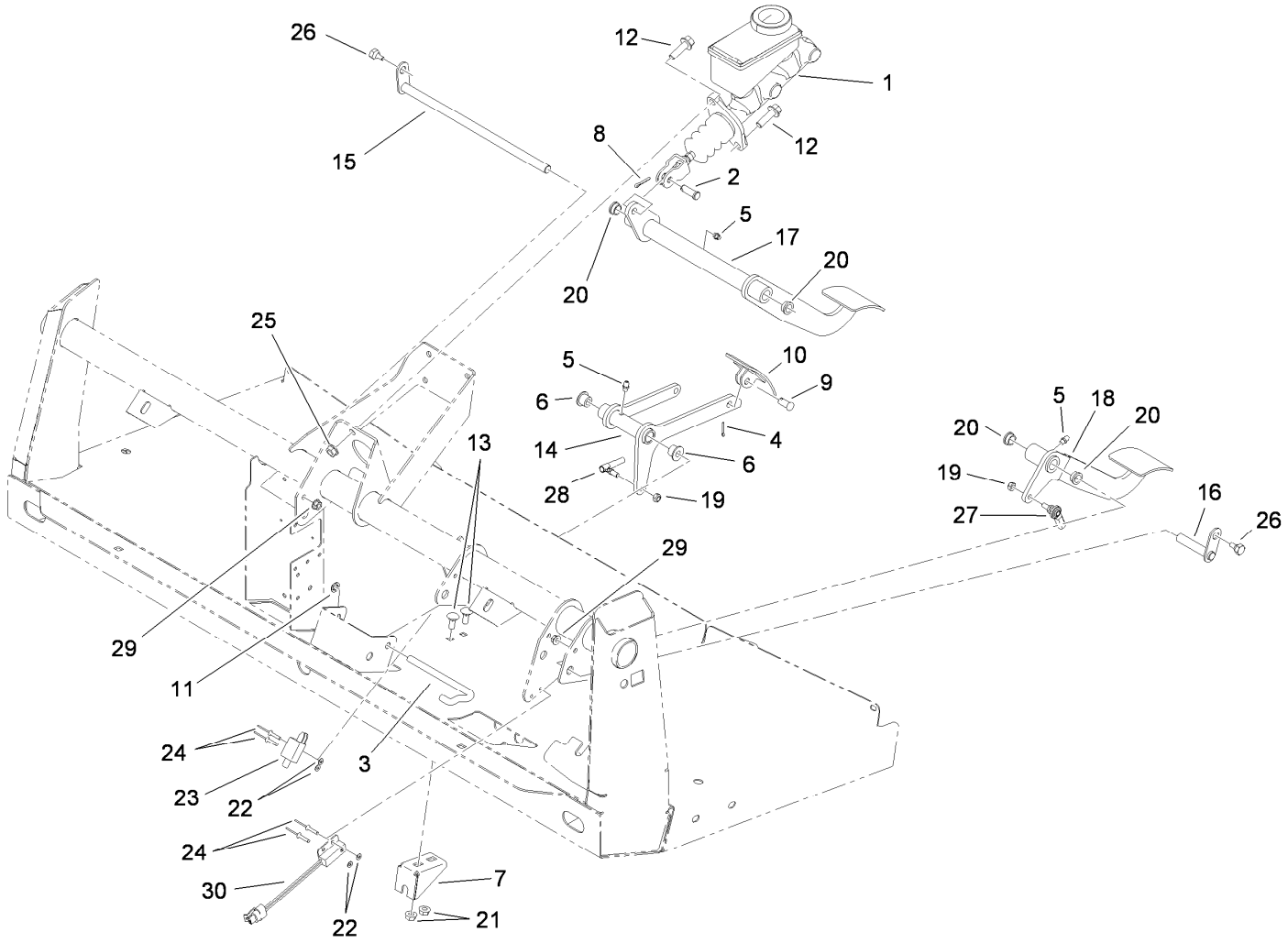

Pedal Assembly

Ref.	Part Number	Qty.	Description
1	104-6782	1	Master Cylinder ASM
2	283-2	1	Pin-Clevis
3	87-2880	1	Shaft-Pedal, Accelerator
4	3272-6	1	Pin-Cotter
5	302-5	3	Fitting-Grease
6	256-259	2	Bushing-Flange
7	106-2421	1	Bracket-Mount, Cable
8	3272-10	1	Pin-Cotter
9	283-85	1	Pin-Clevis
10	93-8969-03	1	Pedal
11	32151-56	1	Ring-Retaining, External
12	3234-11	2	Screw-HHF
13	3230-1	2	Bolt-CARR
14	106-2471-03	1	Arm-Pedal, Accelerator
15	106-2475	1	Shaft-Brake

Ref.	Part Number	Qty.	Description
16	115-2269	1	Pin-Pivot
17	115-2275-03	1	Pedal-Brake
18	115-2271-03	1	Pedal-Clutch
19	3296-13	2	Nut-Lock, NI
20	256-156	4	Bushing-Flange
21	32128-20	2	Nut-HF
22	3256-21	4	Washer-Flat
23	95-1653	1	Switch-Pole, Single
24	3269-25	4	Rivet-Pop
25	3290-357	2	Nut-HHF, Whiz
26	63-3410	2	Screw-Shoulder
27	110-2554	1	Rod End-Spherical
28	18-1720	1	Ball Joint
29	32128-33	2	Nut-HF
30	105-0023	1	Switch-Proximity

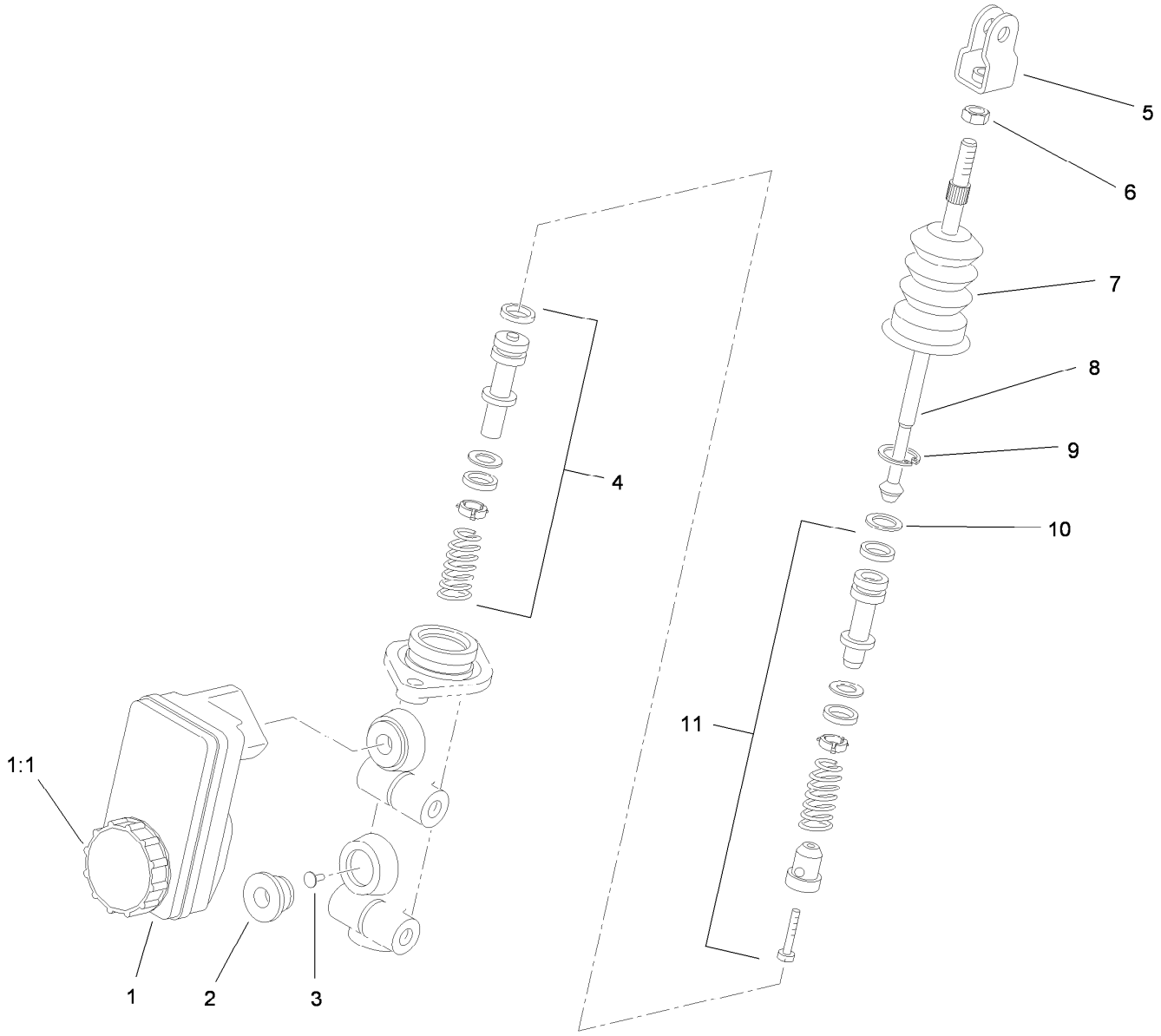

Master Cylinder Assembly No. 104-6782

Ref.	*Part Number*	*Qty.*	*Description*
1	104-6845	1	Reservoir ASM
1:1	92-4112	1	Cap ASM
2	93-8971	2	Seal-Port, Flange
3	92-4103	1	Pin-Stop
4	92-4102	1	Secondary Piston ASM
5	92-4110	1	Clevis
6	21-0360	1	Nut-Hex
7	94-5209	1	Cover-Dust
8	94-5210	1	Rod-Push
9	92-4109	1	Ring-Snap
10	92-4108	1	Retainer-Washer
11	92-4101	1	Primary Piston ASM

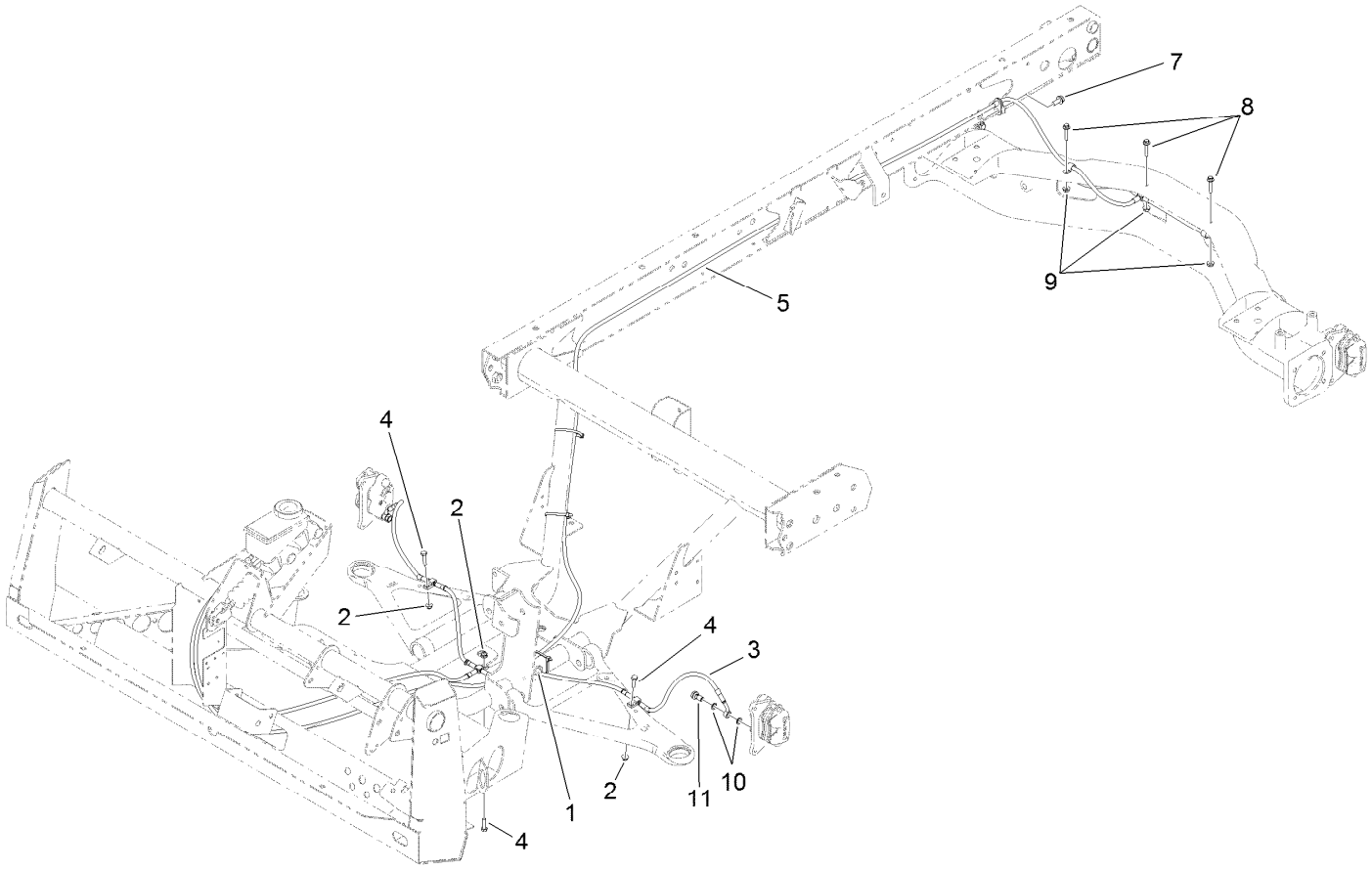

Hydraulic Brake Line Assembly

Ref.	*Part Number*	*Qty.*	*Description*
1	32180-030	2	Clip-Tie
2	104-7201	3	Nut-HF
3	119-9682	1	Front Brake Line ASM
4	321-6	3	Screw-HH
5	119-9681	1	Rear Brake Line ASM
7	32144-11	1	Screw-Thd Roll, HWH
8	3234-21	3	Screw-HHF
9	32128-33	3	Nut-HF
10	115-2341	8	Washer-Banjo
11	120-4875	4	Bolt-Flange, Banjo

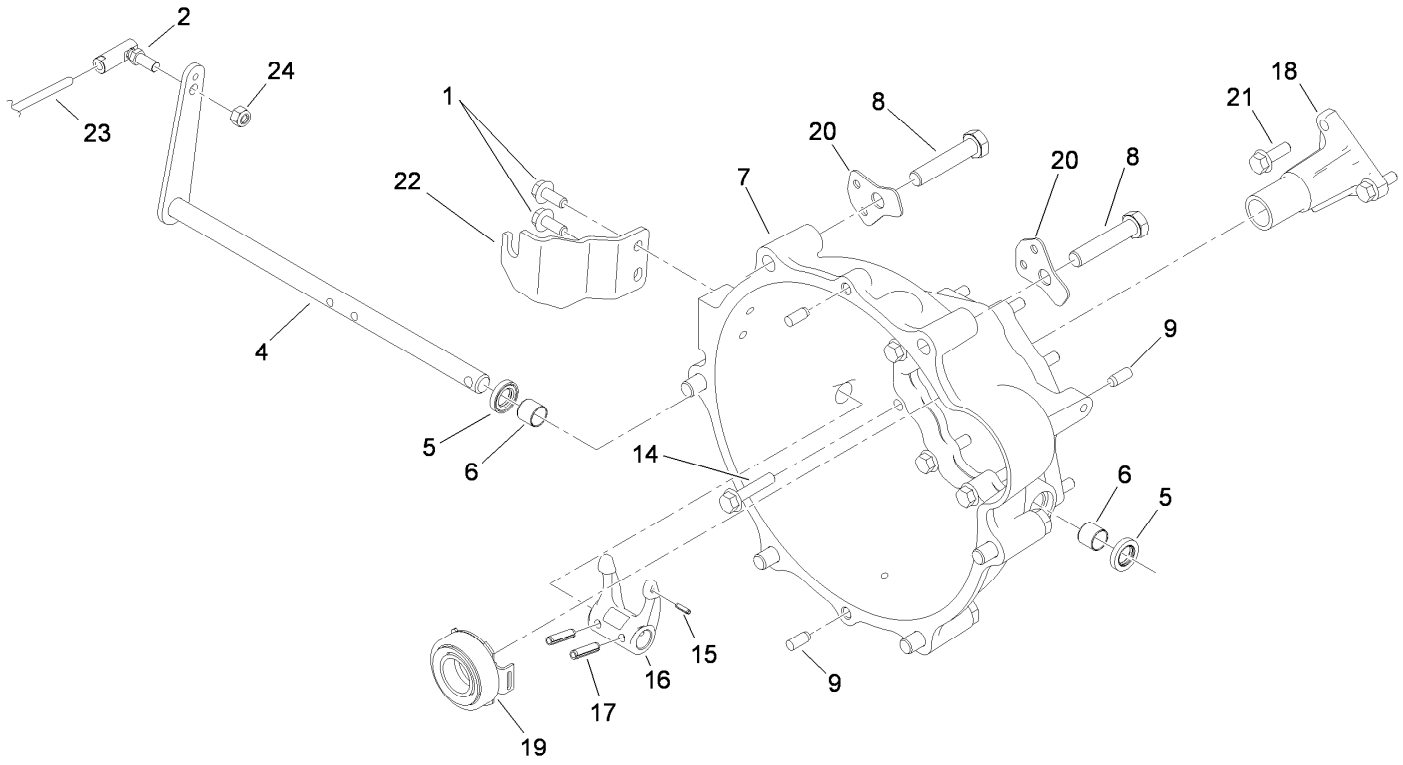

Clutch Linkage Assembly

Ref.	Part Number	Qty.	Description
1	98-7977	2	Screw-HHF
2	2411-33	1	Balljoint-RH (W/Grommet)
4	115-2311	1	Lever-Clutch
5	87-1920	2	Seal-Oil
6	87-3770	2	Bushing-Housing, Bell
7	104-9249	1	Housing-Bell
8	3215-2	6	Screw-HH
9	87-1910	4	Pin-Dowel
14	33104-040	9	Screw-HHF
15	32121-7	1	Pin-Roll, Slotted

Ref.	Part Number	Qty.	Description
16	87-5300	1	Fork-Clutch
17	32121-24	2	Pin-Spring
18	115-2259	1	Guide-Release
19	110-2538	1	Bearing-Release, Clutch
20	115-2247	2	Bracket-Harness
21	33104-025	3	Screw-HHF
22	115-2313	1	Bracket-Cable, Clutch
23	115-2284	1	Cable-Clutch
24	3296-4	1	Nut-Lock

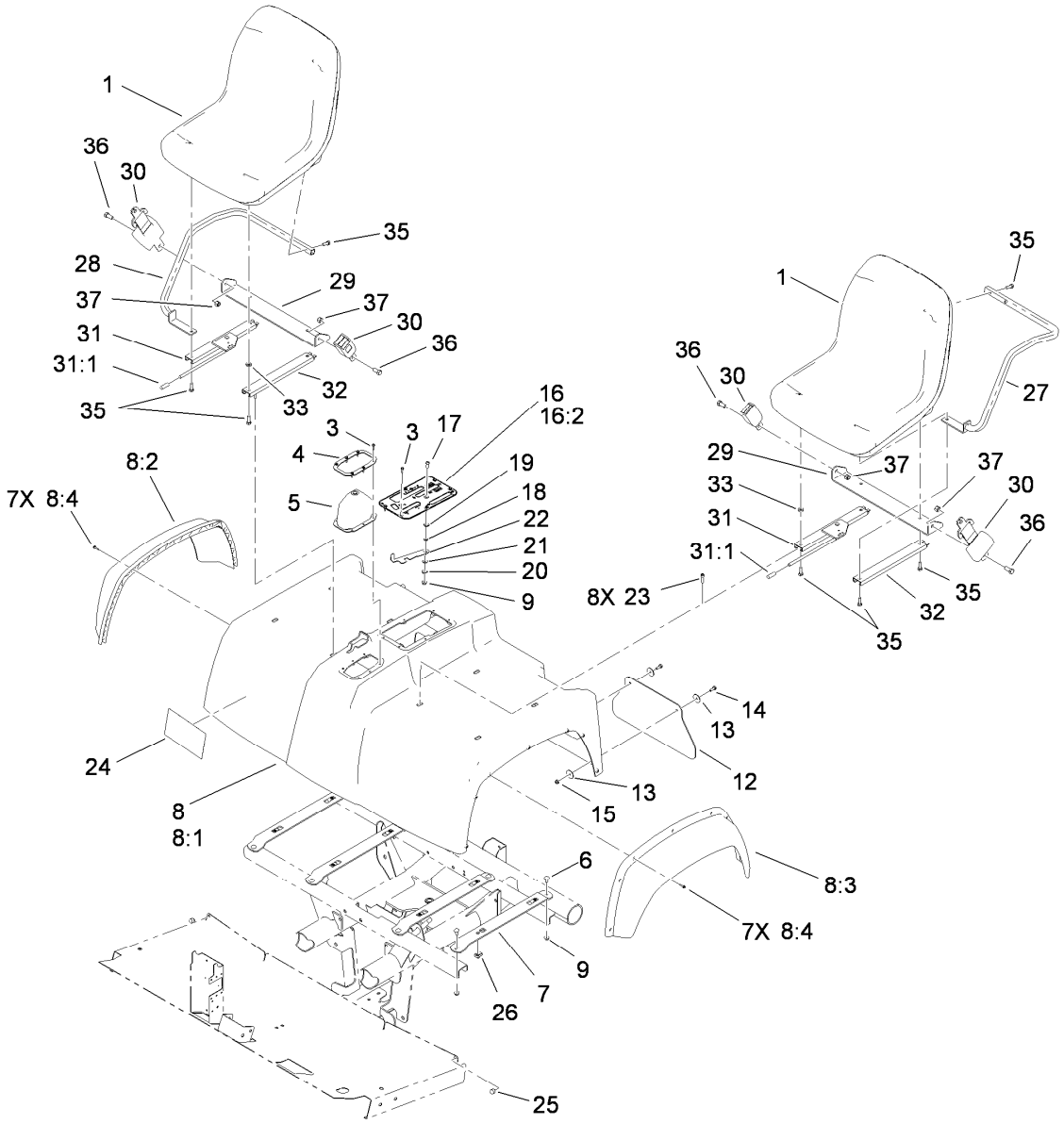

Shroud and Seat Assembly

Ref.	Part Number	Qty.	Description
1	112-2923	2	Seat ASM
3	98-1375	12	Screw-HWH
4	87-3760-03	1	Plate-Boot, Shift
5	87-8620	1	Boot-Shift
6	3230-1	8	Bolt-CARR
7	115-2435-03	4	Bracket-Seat
8		1	Seat Base ASM ●
8:1	114-8406	1	Base-Seat
8:2	114-8407	1	Fender-Front, RH
8:3	114-8408	1	Fender-Front, LH
8:4	117-5036	14	Screw-HWH
9	104-8300	9	Nut-HF, NI
12	106-2378	2	Mudflap
13	3256-55	8	Washer-Flat
14	3234-4	4	Screw-HHF
15	104-7201	4	Nut-HF
16	106-7886	1	Control Plate ASM
16:2	106-2377	1	Decal-Console

Ref.	Part Number	Qty.	Description
17	3274-55	1	Screw-HSBH
18	82-4240	1	Spacer-Bearing
19	94-8196	1	Washer-Nylon
20	3290-221	1	Washer-Spring
21	3256-23	1	Washer-Plain
22	106-7984	1	Lever-Detent
23	3274-22	8	Screw-HSH
24	115-7814	1	Decal-Reference, Quick
25	107-8042	2	Bumper-Rubber
26	115-7721	8	Nut-Clip, U
27	119-0731-03	1	Armrest-LH
28	119-0732-03	1	Armrest-RH
29	119-0727-03	2	Bracket-Belt, Seat
30	110-0413	2	Seatbelt-Retractable
31	119-0654	2	Adjuster-Seat, Locking
31:1	2410-49	1	Cap-Vinyl
32	119-0655	2	Adjuster-Seat, Non Locking
33	104-7658	2	Spacer

● Not serviced separately

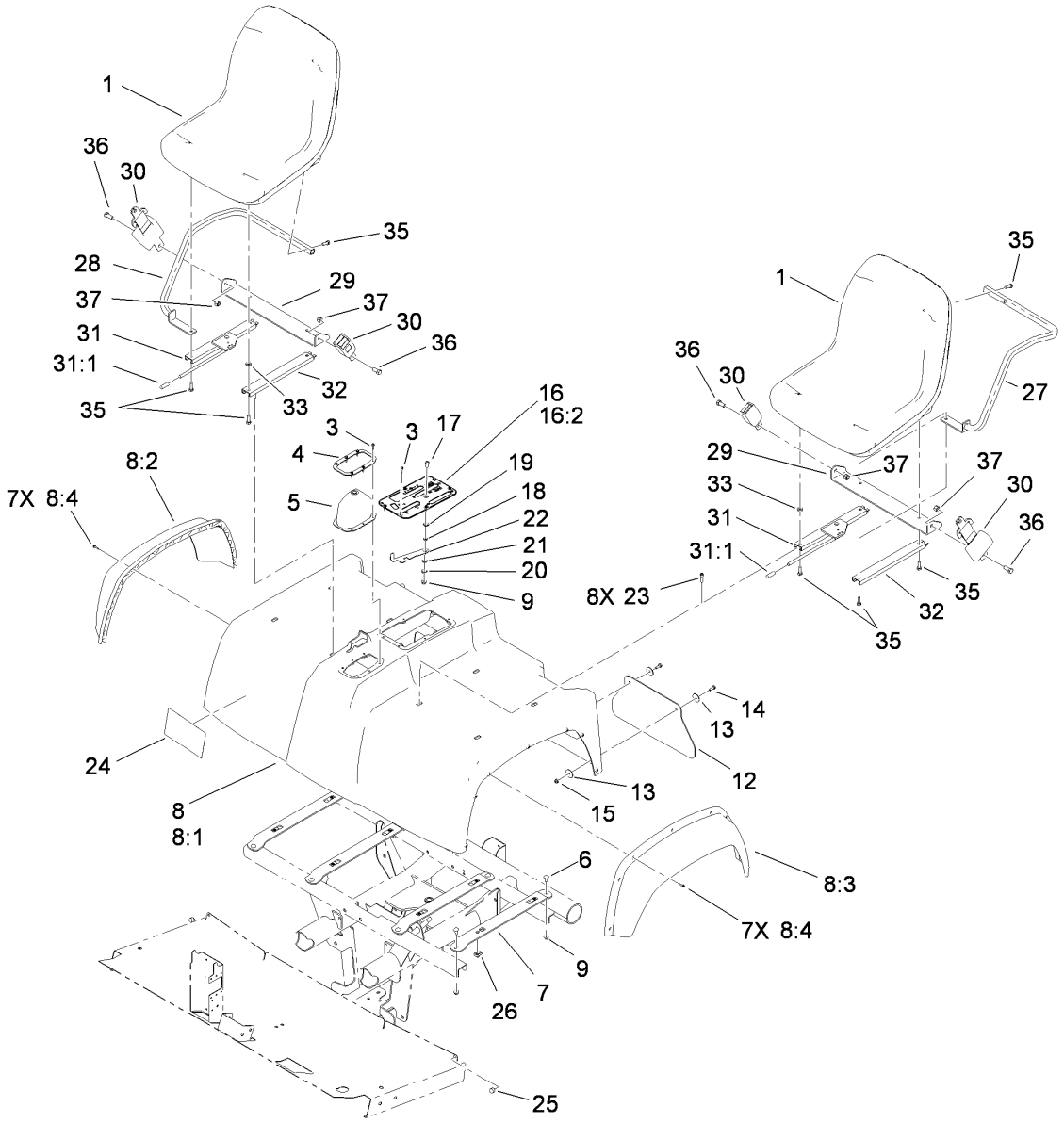

Shroud and Seat Assembly (continued)

Ref.	Part Number	Qty.	Description
35	33114-030	12	Screw-HH
36	3212-4	4	Screw-HH
37	3296-7	4	Nut-Lock

● Not serviced separately

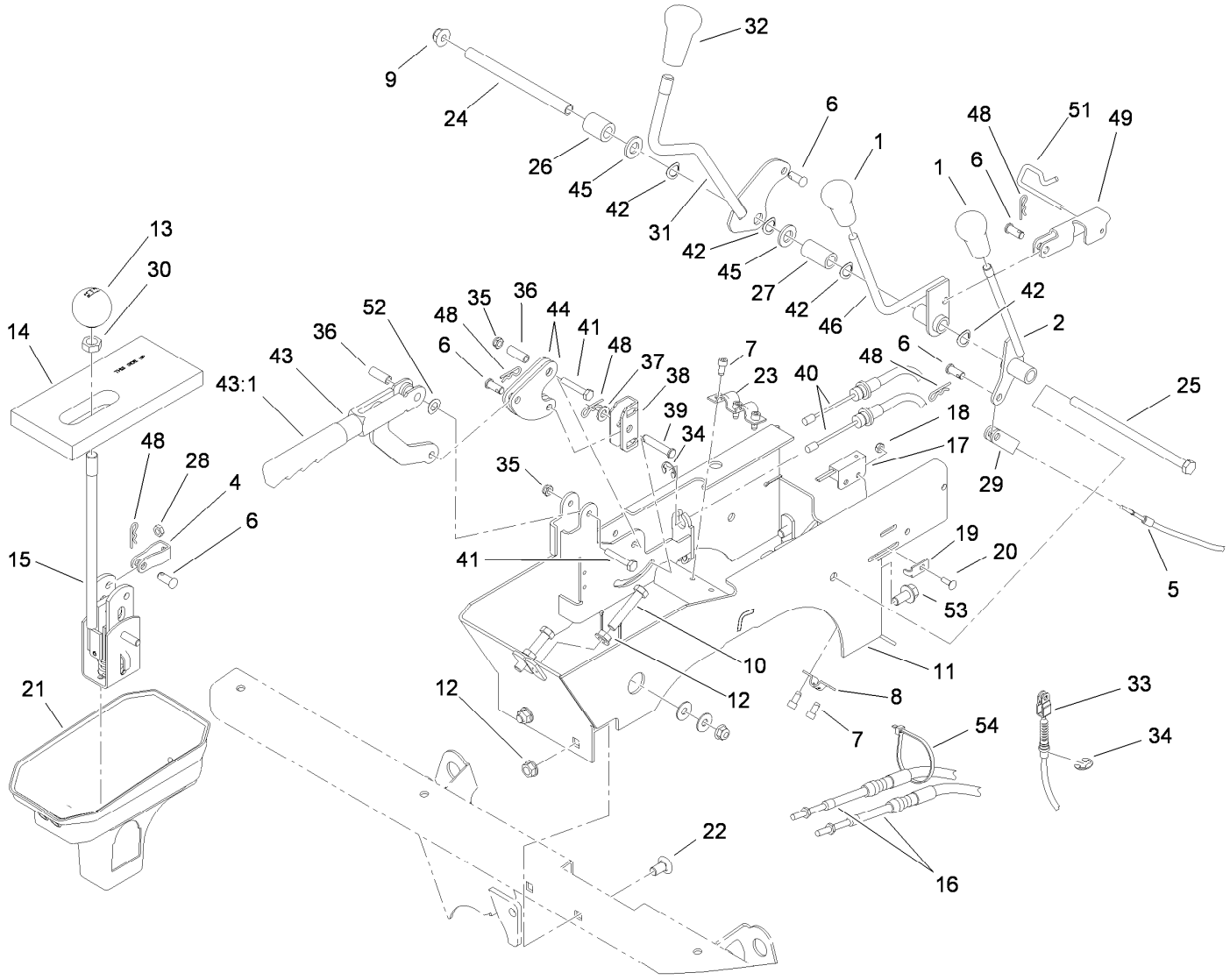

Console Assembly

Ref.	Part Number	Qty.	Description
1	106-7903	2	Knob-Control
2	106-7828	1	Lever
4	87-2310	2	Clevis-Cable
5	115-7812	1	Cable-Hi Low
6	283-62	6	Pin-Clevis
7	65-5220	5	Screw-HSH, Thread Forming
8	87-4340	1	Clamp-Cable
9	104-8301	1	Nut-HF, NI
10	323-10	2	Screw-HH
11	108-6914-03	1	Support-Lever
12	3290-357	4	Nut-HHF, Whiz
13	87-6720	1	Knob-Shift
14	87-6570	1	Seal-Boot, Lower
15	106-7887	1	Shift ASM
16	115-7811	2	Cable-Selector, Gear
17	100-1270	1	Switch-Proximity
18	3296-12	1	Nut-Lock, NI
19	100-4872	1	Plate-Switch, Neutral
20	3229-34	1	Screw-CARR
21	106-2376	1	Boot-Shift, Lower

Ref.	Part Number	Qty.	Description
22	3231-21	2	Screw-CARR
23	87-4960	1	Clamp-Cable
24	106-7833	1	Spacer
25	323-36	1	Screw-HH
26	66-6501	1	Spacer-Wheel
27	120-5037	1	Spacer
28	3220-1	2	Nut-Jam
29	87-7160	1	Clevis-Cable
30	3218-18	1	Nut-Jam
31	112-3008	1	Lever-Lock, Differential
32	106-7952	1	Knob
33	115-2287	1	Cable-Lock, Differential
34	32120-47	3	Ring-Retaining, External
35	3296-56	2	Nut-Lock, NI
36	114402	2	Spacer
37	3256-23	1	Washer-Plain
38	87-3480	1	Bracket-Equalizer, Cable
39	94-3829	1	Pin-Clevis
40	115-2283	2	Cable-Brake, Park
41	321-9	2	Screw-HH
42	3290-221	4	Washer-Spring

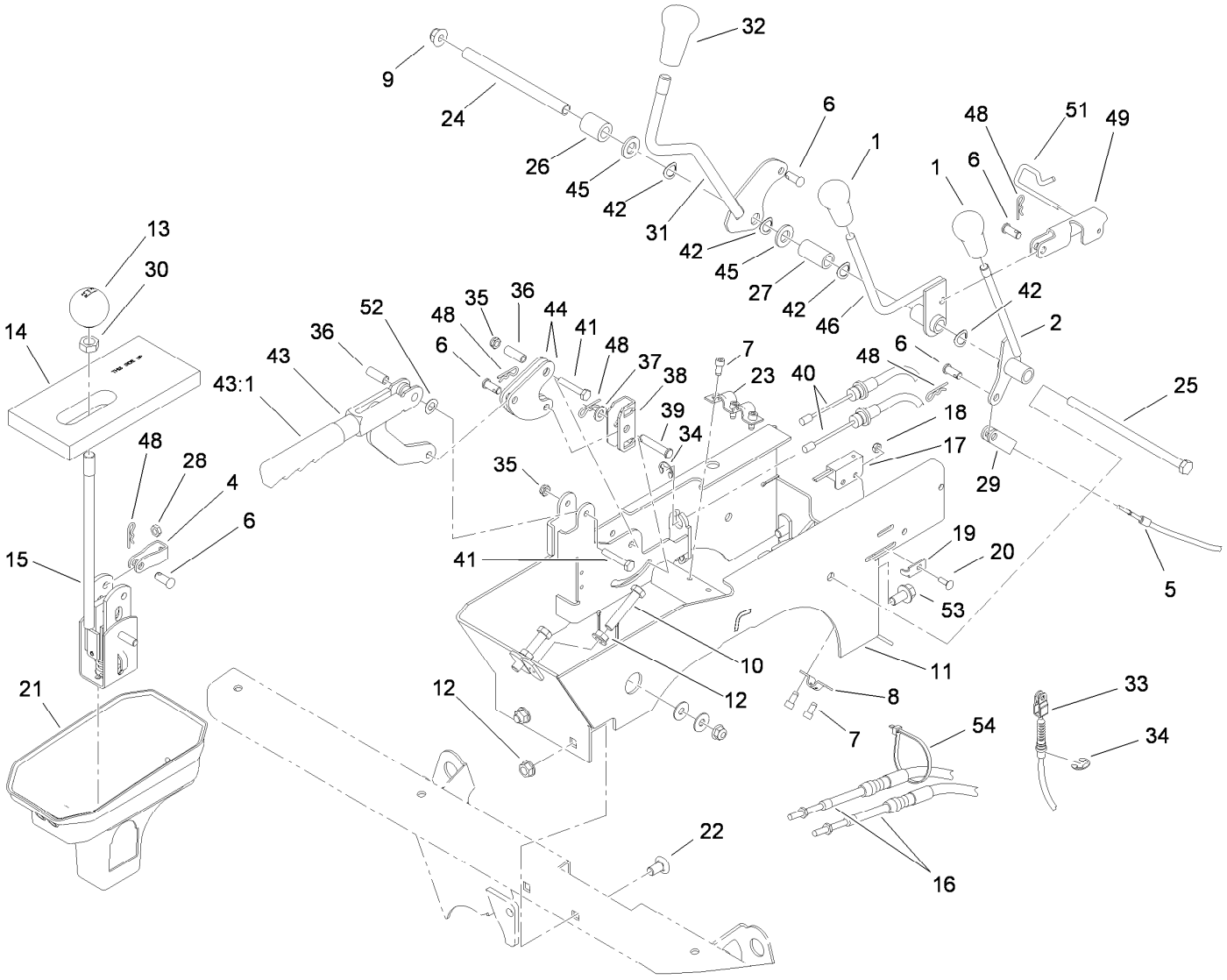

Console Assembly (continued)

Ref.	Part Number	Qty.	Description
43	104-6842	1	Lever-Brake, Park
43:1	106-7972	1	Grip-Handle
44	106-7814	2	Bellcrank
45	33096-00	2	Washer-Flat
46	106-7960	1	Lever-HYD
48	3290-307	7	Pin-Cotter
49	115-2250	1	Link
51	115-2350	1	Pin-Retainer
52	3290-477	1	Washer-Curved
53	3234-12	2	Screw-HHF
54	3290-379	3	Tie-Cable

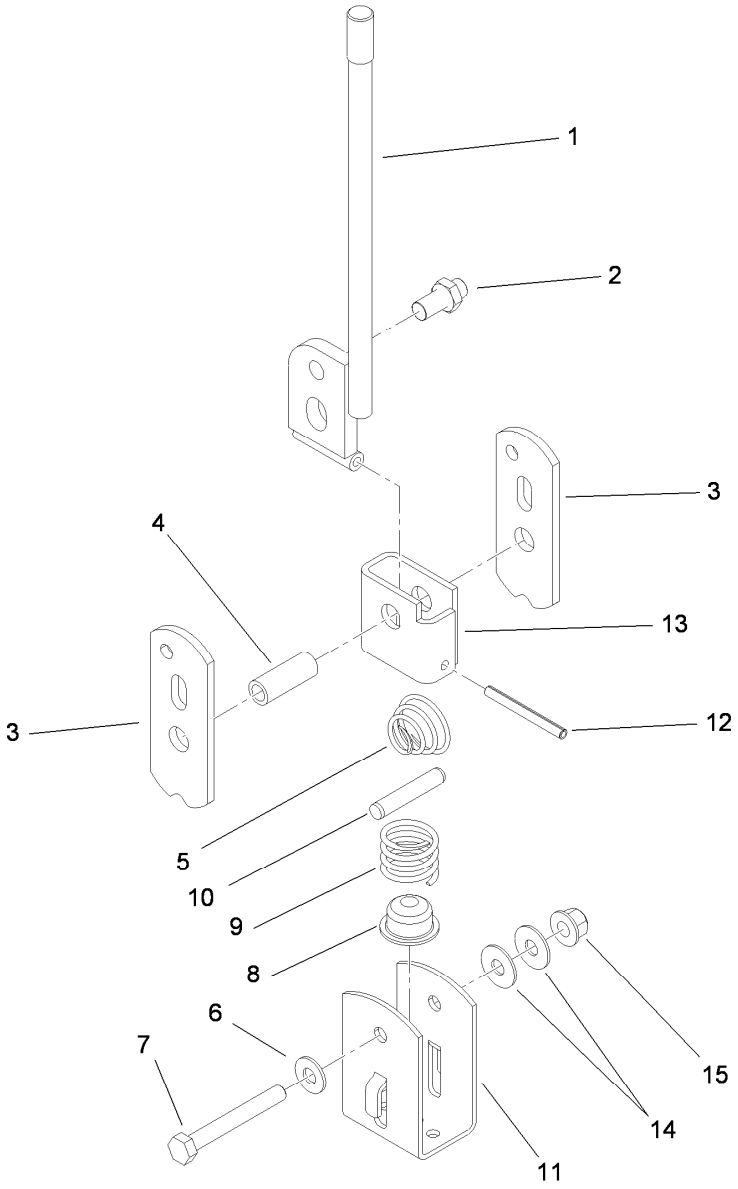

Shift Assembly No. 106-7887

Ref.	*Part Number*	*Qty.*	*Description*
1	87-2040	1	Lever-Shift
2	87-3650	1	Pin-Shift
3	87-3540	2	Link-Shift
4	87-2520	1	Tube-Pivot
5	87-2900	1	Spring-Compression
6	87-8640	1	Washer-Flat
7	322-12	1	Screw-HH
8	87-3530	1	Button-Shifter
9	87-3660	1	Spring-Compression
10	3290-507	1	Pin-Dowel
11	87-3520	1	Clevis
12	32121-48	1	Pin-Spring
13	87-6040	1	Bracket-Shifter
14	3290-456	2	Washer-Belleville
15	104-8300	1	Nut-HF, NI

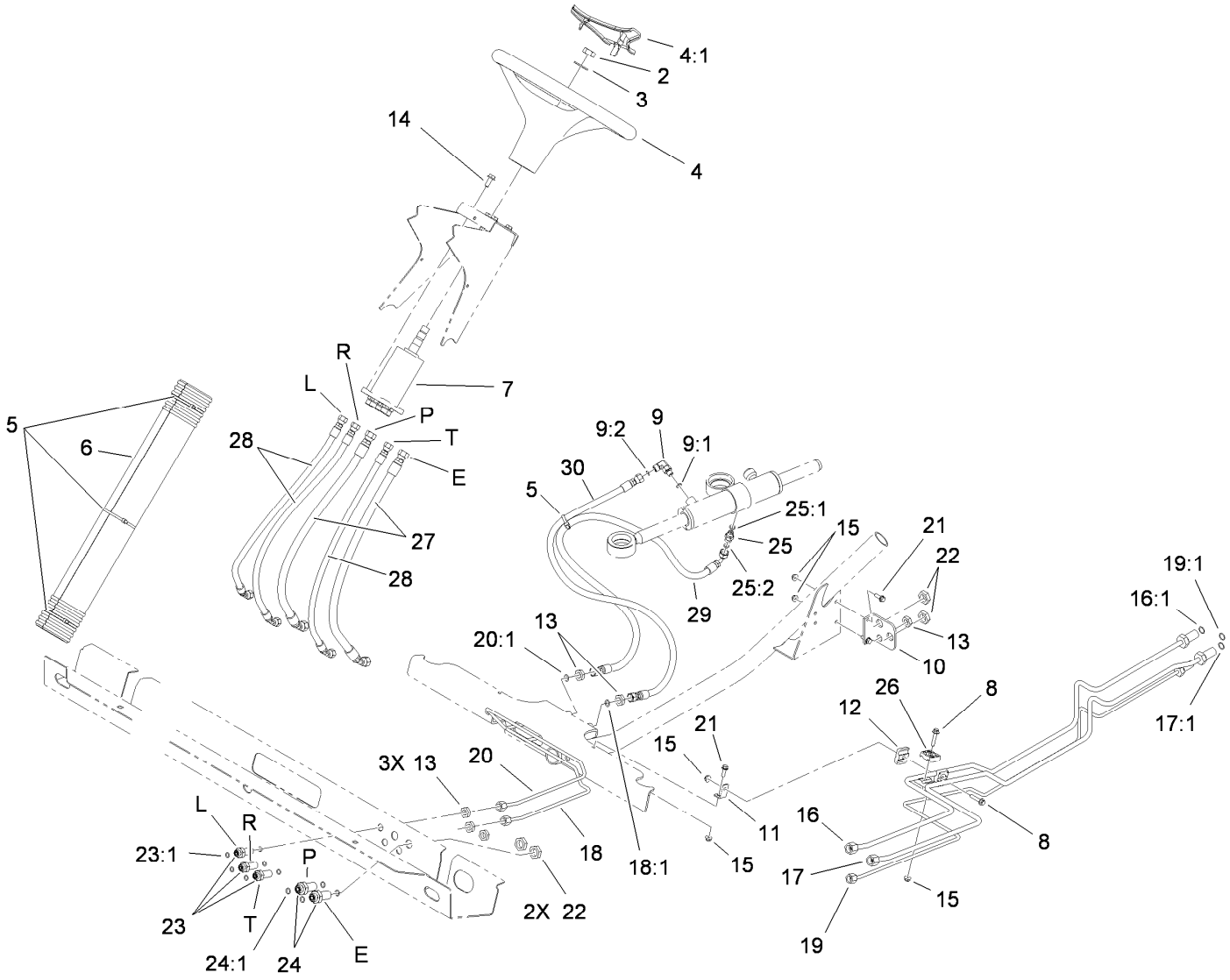

Steering Hydraulic Assembly

Ref.	Part Number	Qty.	Description
2	3296-33	1	Nut-Lock, NI
3	3256-27	1	Washer-Flat
4	98-1471	1	Wheel-Steering
4:1	98-1468	1	Cover-Wheel, Steering
5	3290-379	4	Tie-Cable
6	106-6713	1	Cover-Lines, Steering
7	115-7926	1	Pump-Steering
8	3234-21	2	Screw-HHF
9	340-132	1	Fitting-Elbow, 90 DEG
9:1	237-78	1	O-Ring
9:2	237-21	1	O-Ring
10	106-7801-03	1	Bracket-Line, Steering
11	106-7807	1	Bracket-Line, Steering
12	106-7839	2	Clamp-Tube
13	3219-10	6	Nut-Hex
14	98-7977	4	Screw-HHF
15	104-7201	5	Nut-HF
16	115-7701	1	Tube-HYD
16:1	237-22	1	O-Ring
17	115-7702	1	Tube-HYD
17:1	237-22	1	O-Ring

Ref.	Part Number	Qty.	Description
18	106-7804	1	Tube-HYD
18:1	237-21	1	O-Ring
19	115-7703	1	Tube-HYD
19:1	237-21	1	O-Ring
20	106-7806	1	Tube-HYD
20:1	237-21	1	O-Ring
21	3234-4	3	Screw-HHF
22	340-70	4	Nut-Lock
23	94-1444	3	Union-Bulkhead
23:1	237-21	2	O-Ring
24	340-71	2	Fitting-Straight, Bulkhead
24:1	237-22	2	O-Ring
25	340-92	1	Fitting-Straight
25:1	237-78	1	O-Ring
25:2	237-21	1	O-Ring
26	56-7973	2	Clamp-Tube
27	106-7975	2	Hose-HYD
28	106-7974	3	Hose-HYD
29	117-4861	1	Hose-HYD
30	108-6505	1	Hose-HYD

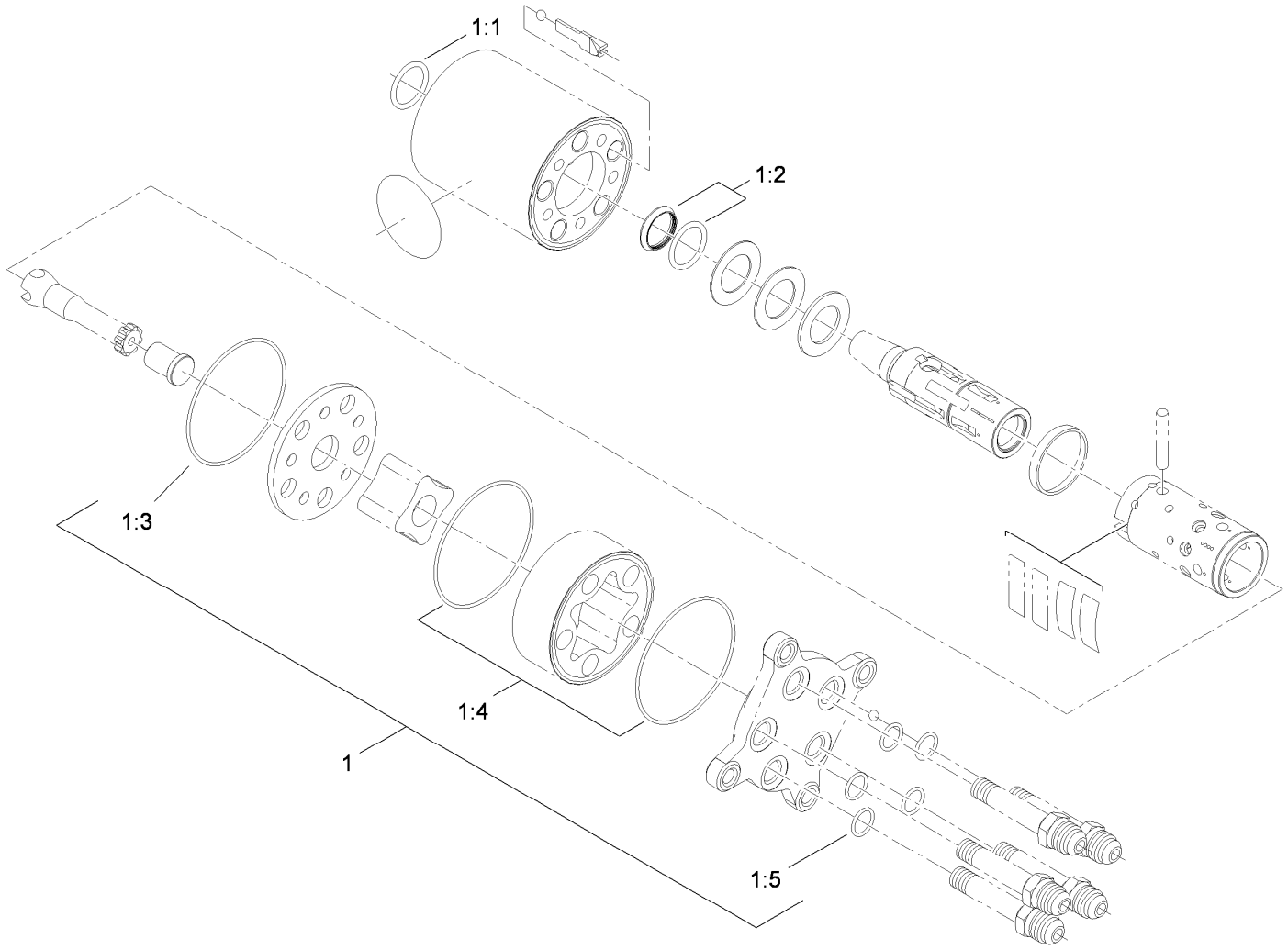

Steering Valve Assembly No. 115-7926

Ref.	*Part Number*	*Qty.*	*Description*
1	106-6716	1	Seal Kit
1:1		1	Ring-Seal, Dust ●
1:2		1	Seal-Shaft ●
1:3		1	O-Ring ●
1:4		2	O-Ring ●
1:5		5	O-Ring ●

● Not serviced separately

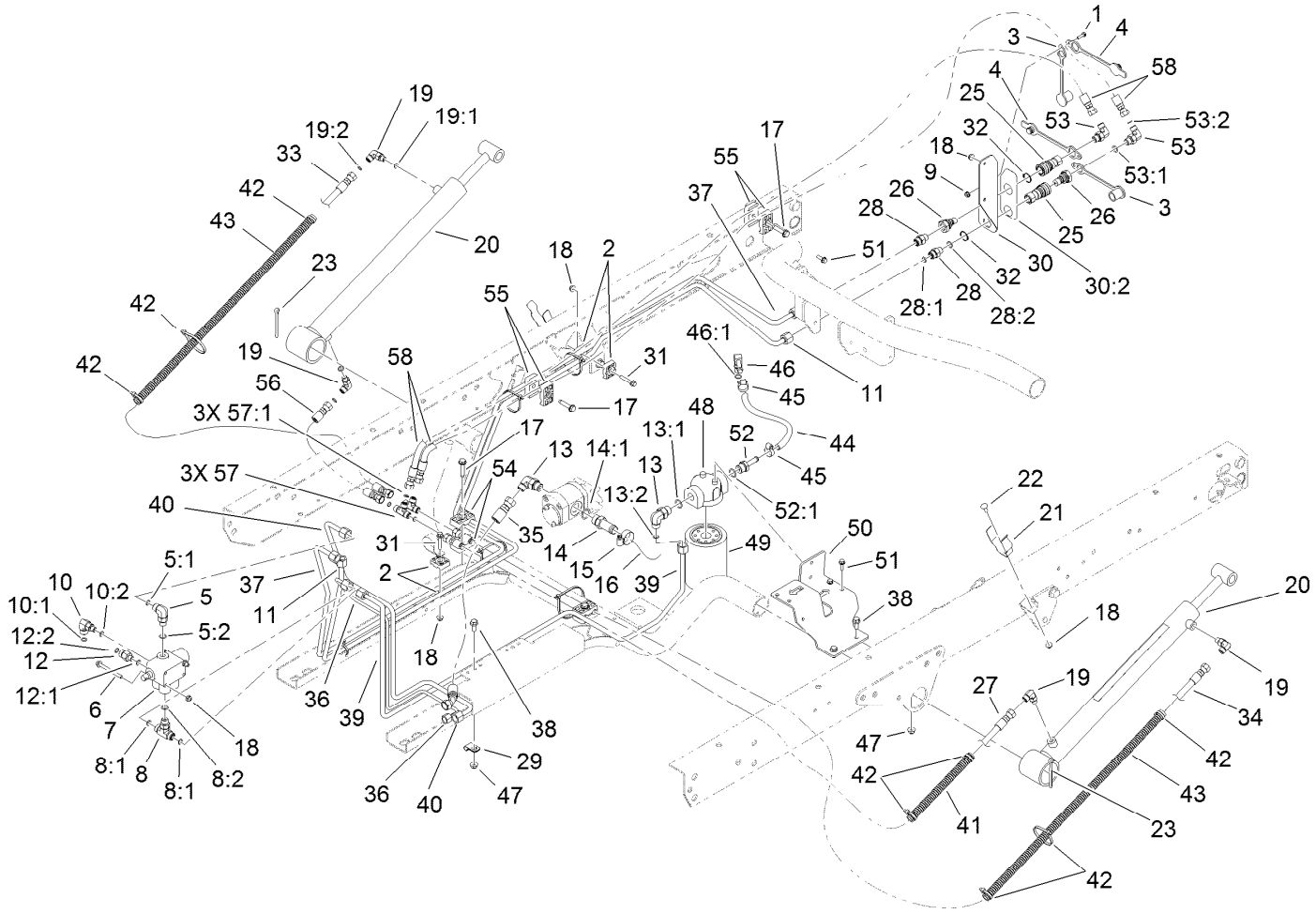

Lift Valve and Hydraulic Assembly

Ref.	Part Number	Qty.	Description
1	32105-13	1	Screw-HWH
2	56-7973	4	Clamp-Tube
3	106-7881	2	Cap-Dust, HYD
4	106-7882	2	Plug-Dust, HYD
5	340-77	1	Fitting-Elbow, 90 DEG
5:1	237-22	1	O-Ring
5:2	237-42	1	O-Ring
6	114-8410	2	Screw-HHF
7	43-1950	1	HYD Control Valve ASM
8	340-94	1	Adapter
8:1	237-22	2	O-Ring
8:2	237-42	1	O-Ring
9	3290-148	1	Nut-HF
10	340-97	1	Fitting-Elbow, 90 DEG
10:1	237-22	1	O-Ring
10:2	237-78	1	O-Ring
11	115-2218	1	Tube-HYD
12	340-88	1	Fitting-Straight
12:1	237-22	1	O-Ring
12:2	237-78	1	O-Ring
13	340-18	2	Fitting-HYD, 90 DEG

Ref.	Part Number	Qty.	Description
13:1	237-79	1	O-Ring
13:2	237-22	1	O-Ring
14	354-136	1	Fitting-STR
14:1	237-80	1	O-Ring
15	2412-129	1	Clamp-Hose
16	87-3670	1	Hose-Suction
17	32144-57	4	Screw
18	104-7201	8	Nut-HF
19	340-132	4	Fitting-Elbow, 90 DEG
19:1	237-78	1	O-Ring
19:2	237-21	1	O-Ring
20	106-7939	2	HYD Cylinder ASM
21	108-3109	2	Retainer-Cylinder
22	3229-1	2	Bolt-CARR
23	3272-37	2	Pin-Cotter
25	106-7968	2	Coupler-Quick, Female
26	106-7969	2	Coupler-Quick, Male
27	115-7711	1	Hose-HYD
28	340-2	2	Fitting-Straight
28:1	237-22	1	O-Ring
28:2	237-42	1	O-Ring

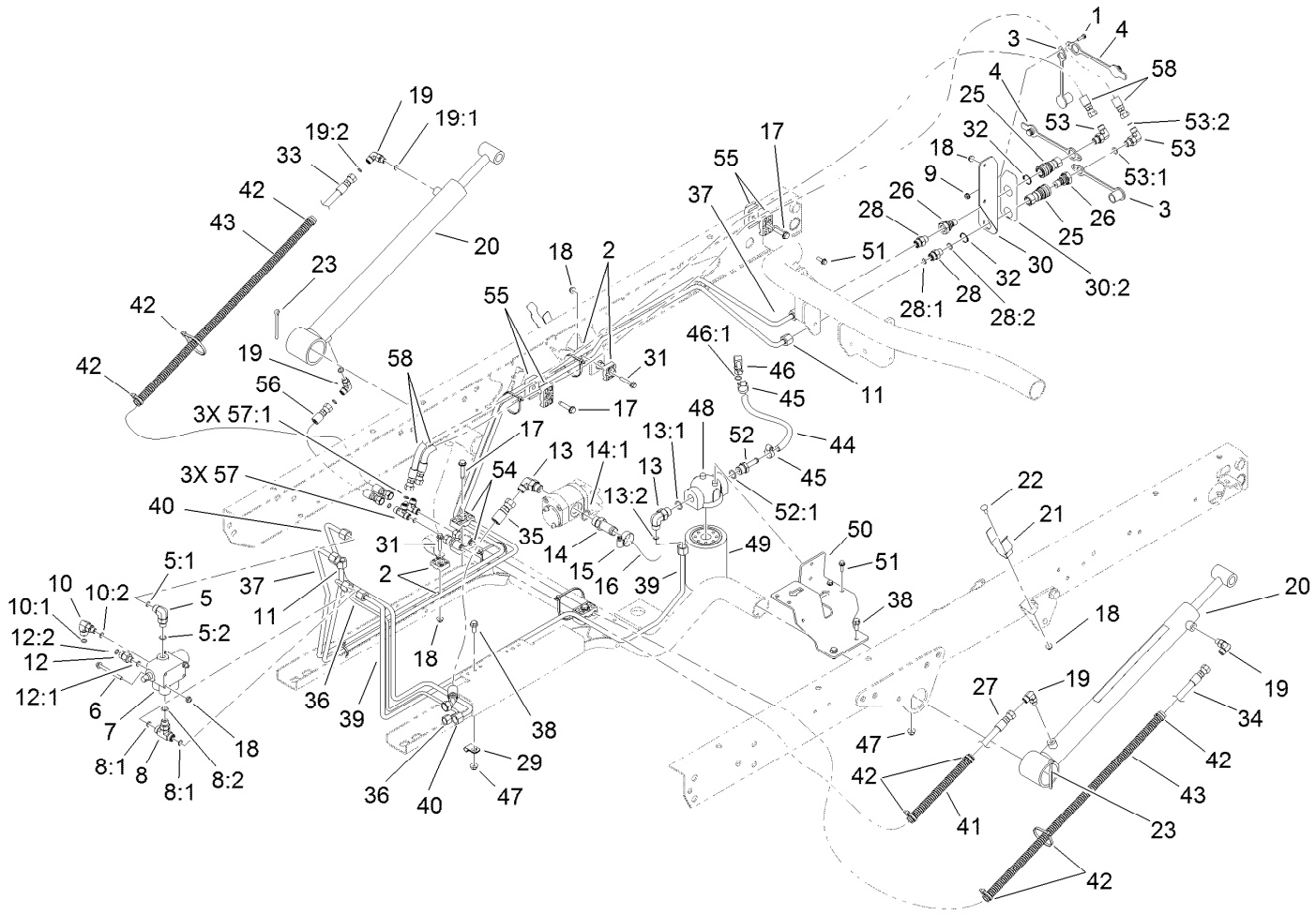

Lift Valve and Hydraulic Assembly (continued)

Ref.	Part Number	Qty.	Description
29	2412-113	1	Clamp-R
30	115-7715	1	Coupler Bracket ASM
30:2	115-7723	1	Decal-Disconnect, Quick
31	94-5781	2	Screw-HHF
32	32151-83	2	Ring-Snap
33	108-6508	1	Hose-HYD
34	104-3716	1	Hose-HYD
35	95-0965	1	Hose ASM
36	115-2216	1	Tube-HYD
37	115-2217	1	Tube-HYD
38	3234-5	3	Screw-HHF
39	115-2224	1	Tube-HYD
40	115-2223	1	Tube-HYD
41	24-7922	1	Conduit-Convoluted, Split
42	3290-379	8	Tie-Cable
43	24-7923	2	Conduit-Convoluted, Split
44	115-2228	1	Hose-HYD
45	2412-36	2	Clamp-Hose

Ref.	Part Number	Qty.	Description
46	100-4887	1	Fitting-Elbow, 90
46:1	237-42	1	O-Ring
47	104-8300	3	Nut-HF, NI
48	87-8780	1	Head-Filter
49	54-0110	1	Filter-Oil, Transmission
50	115-2168-03	1	Bracket-Filter
51	3234-4	4	Screw-HHF
52	115-2231	1	Fitting-STR
52:1	237-79	1	O-Ring
53	340-82	2	Fitting-Elbow, 90 DEG
53:1	237-42	1	O-Ring
53:2	237-21	1	O-Ring
54	56-7971	2	Clamp-Tube
55	56-7976	6	Clamp-Tube
56	110-0931	1	Hose-HYD
57	340-21	2	Fitting
57:1	237-21	3	O-Ring
58	106-3680	2	Hose-HYD

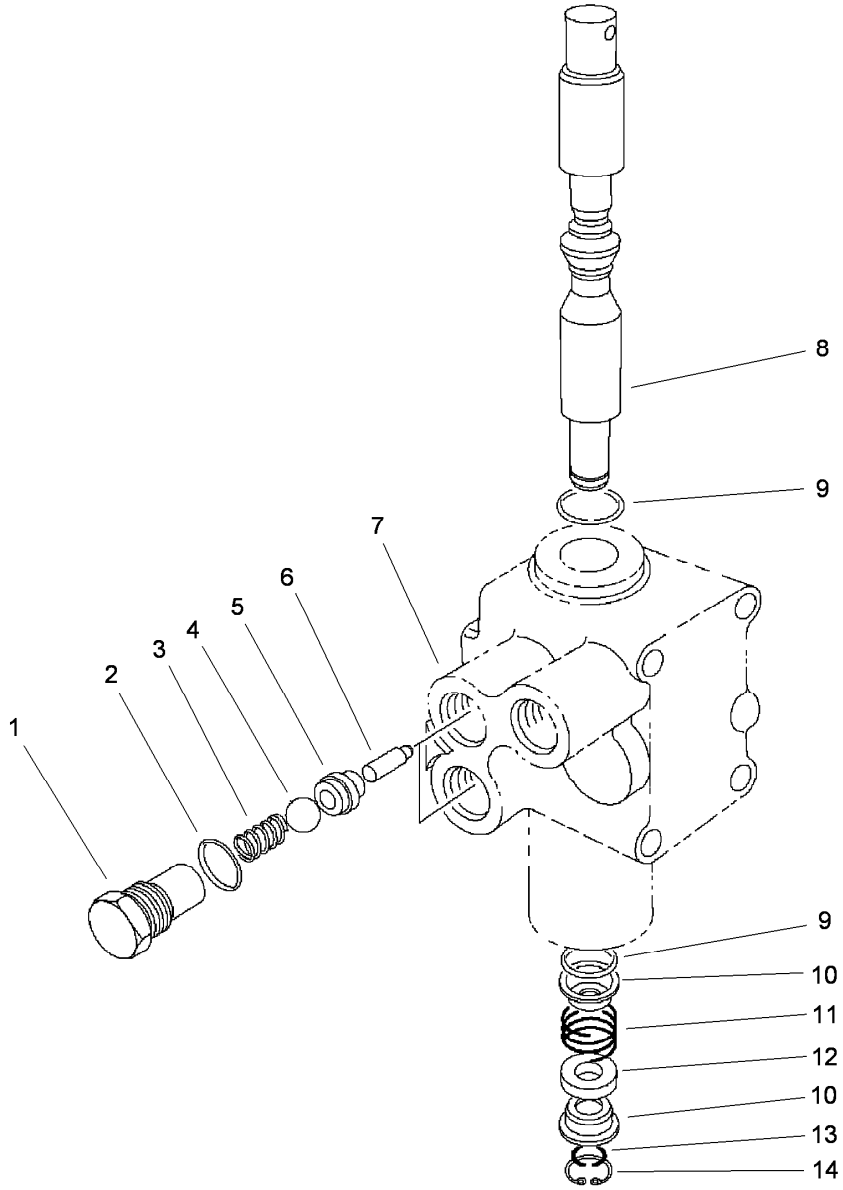

Control Valve Assembly No. 43-1950

Ref.	*Part Number*	*Qty.*	*Description*
1	22-8330	2	Plug
2	237-42	2	O-Ring
3	22-8340	2	Spring
4	22-8350	2	Ball
5	22-8370	2	Seat-Valve
6	22-8360	2	Pin
7		1	Body ●
8	22-8420	1	Spool
9	22-8500	2	O-Ring
10	22-8380	2	Retainer
11	22-8410	1	Spring
12	23-3030	1	Spacer
13	22-8480	1	Ring-Snap
14	22-8490	1	Ring-Snap

● Not serviced separately

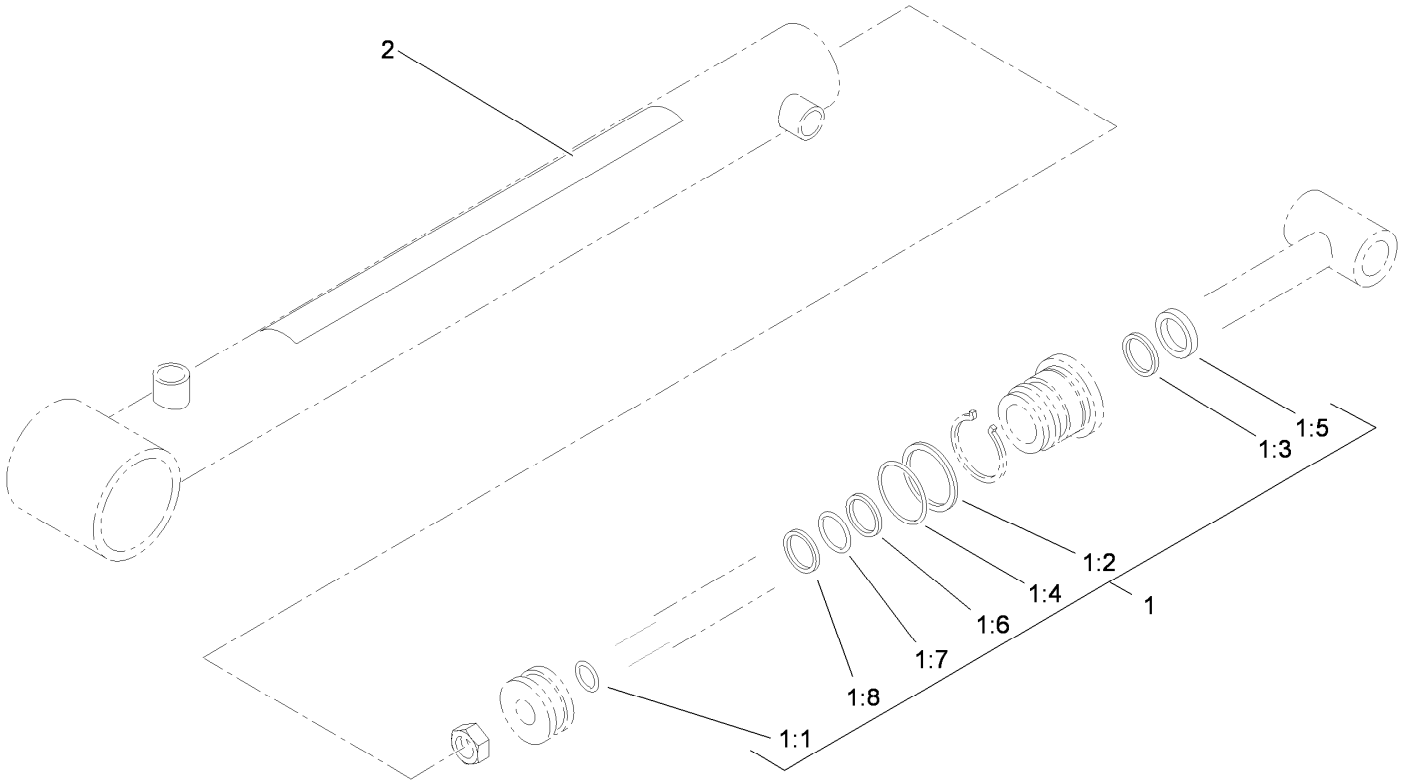

Hydraulic Cylinder Assembly No. 106-7939

Ref.	*Part Number*	*Qty.*	*Description*
1	106-7941	1	Seal Kit
1:1		1	O-Ring ●
1:2		1	O-Ring ●
1:3		1	Seal ●
1:4		1	Back-Up ●
1:5		1	Wiper ●
1:6		1	Seal ●
1:7		1	O-Ring ●
1:8		1	Ring-Wear ●
2	93-9852	1	Decal-Warning

● Not serviced separately

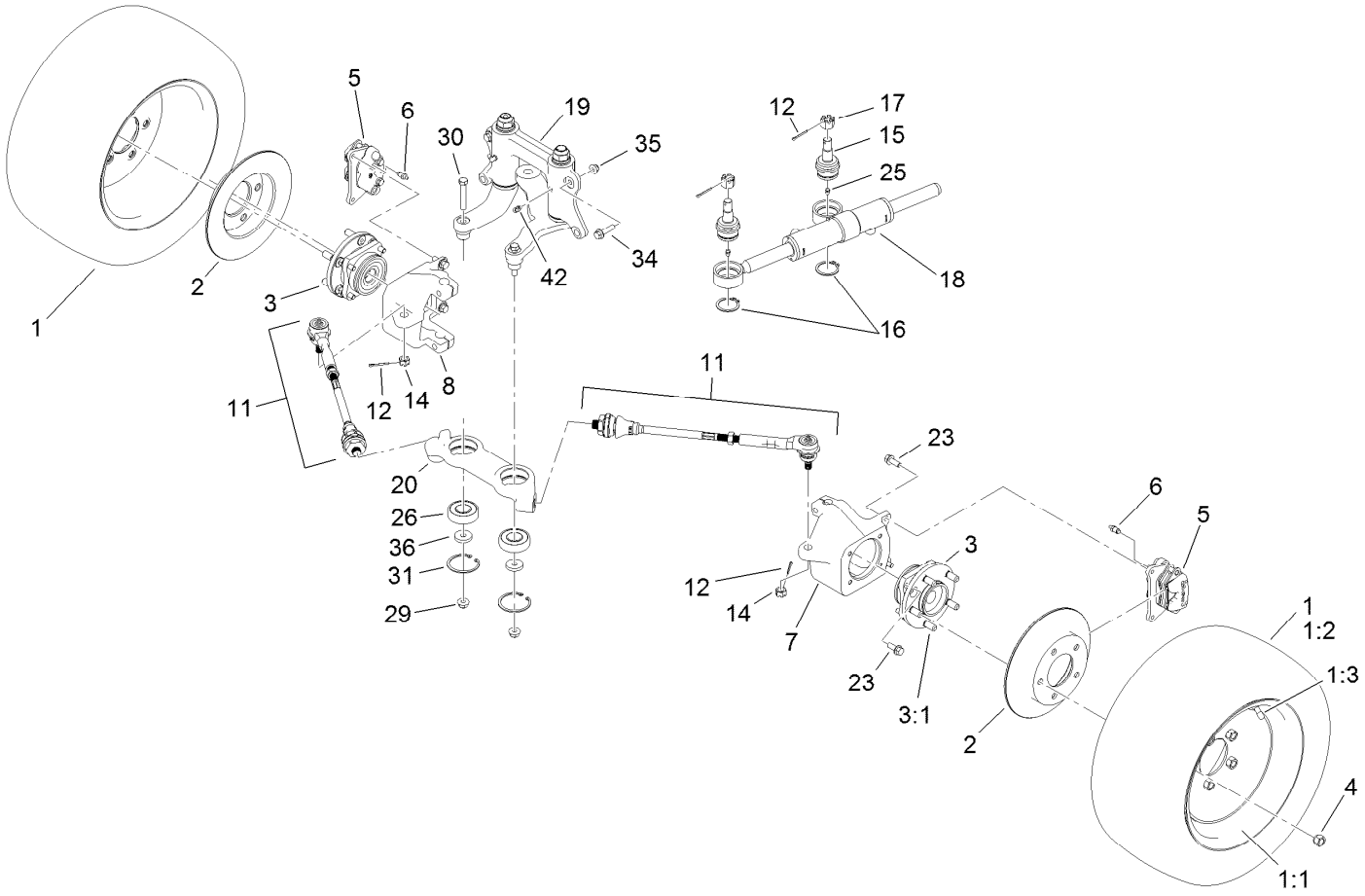

Front Wheel Assembly

Ref.	Part Number	Qty.	Description
1		2	Tire And Wheel ASM ●
1:1	120-4901	1	Wheel
1:2	114-8273	1	Tire
1:3	232-27	1	Stem-Valve
2	114-8351	2	Rotor-Brake
3	112-3214	2	Wheel Hub ASM
3:1	114-8299	5	Stud-Wheel
4	242-50	10	Nut-Lug
5	119-9535	2	Brake Caliper ASM
6	119-9509	2	Screw-Bleed
7	119-9513	1	Knuckle-LH
8	119-9514	1	Knuckle-RH
11	114-8356	2	Tie Rod ASM
12	3272-12	4	Pin-Cotter
14	32136-3	2	Nut-SHH
15	106-6774	2	Joint-Ball
16	32151-104	2	Ring-Retaining, External
17	32136-14	2	Nut-Hst
18	114-8349	1	Cylinder-HYD
19		1	Steering Linkage ASM ●
20	114-8296	1	Link-Center
23	3234-11	12	Screw-HHF
25	302-5	2	Fitting-Grease
26	119-9548	2	Bearing-Ball
29	114-8417	2	Nut-HF, NI
30	324-10	2	Screw-HH
31	32120-22	2	Ring-Snap, Internal
34	114-4681	2	Screw-HHF
35	104-8301	2	Nut-HF, NI
36	112843	2	Washer
42	302-60	2	Fitting-Grease

● Not serviced separately

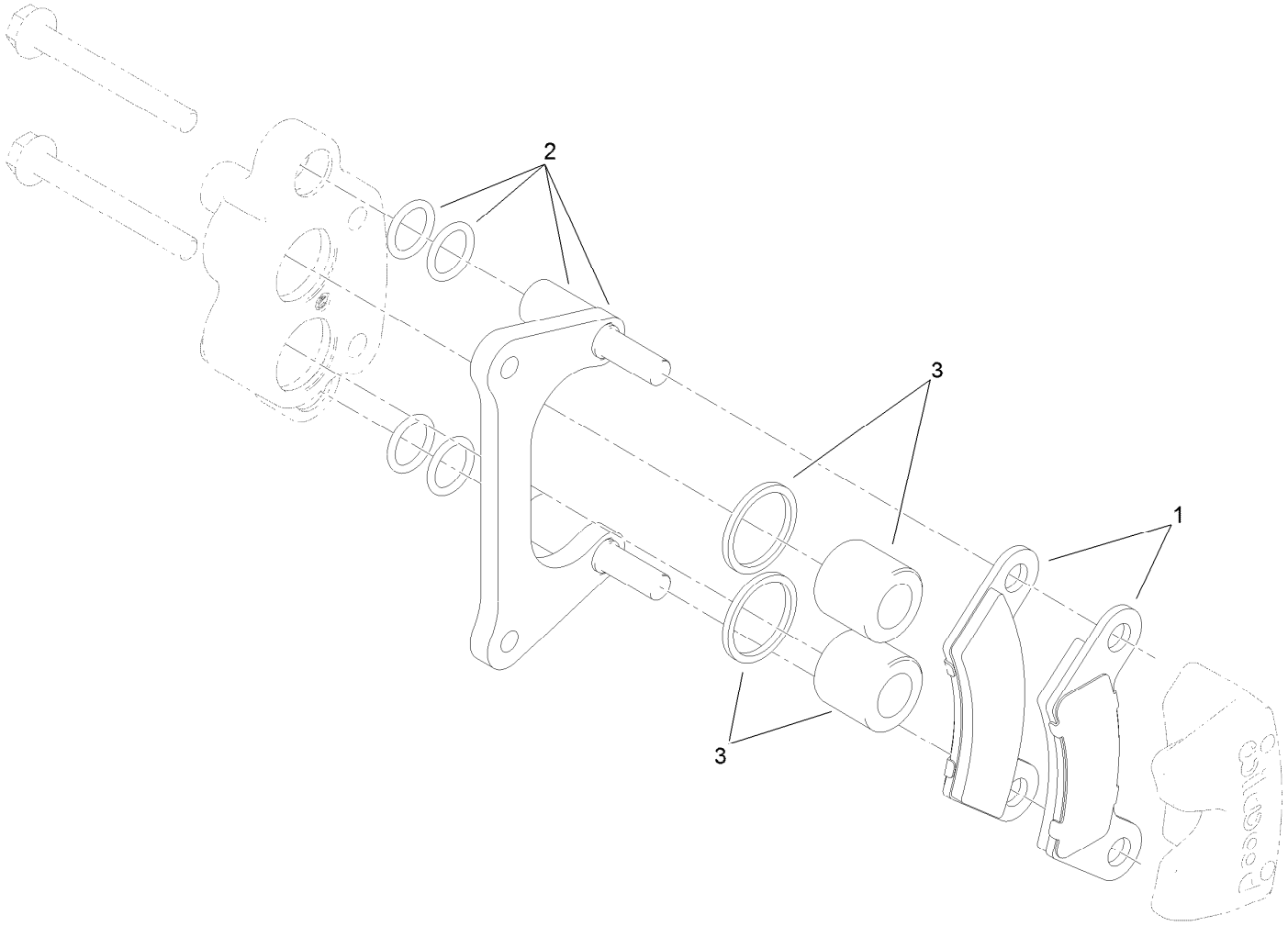

Brake Caliper Assembly No. 119-9535

Ref.	*Part Number*	*Qty.*	*Description*
1	119-9510	1	Pads-Brake
2	119-9511	1	Bracket Kit
3	119-9512	1	Piston Kit

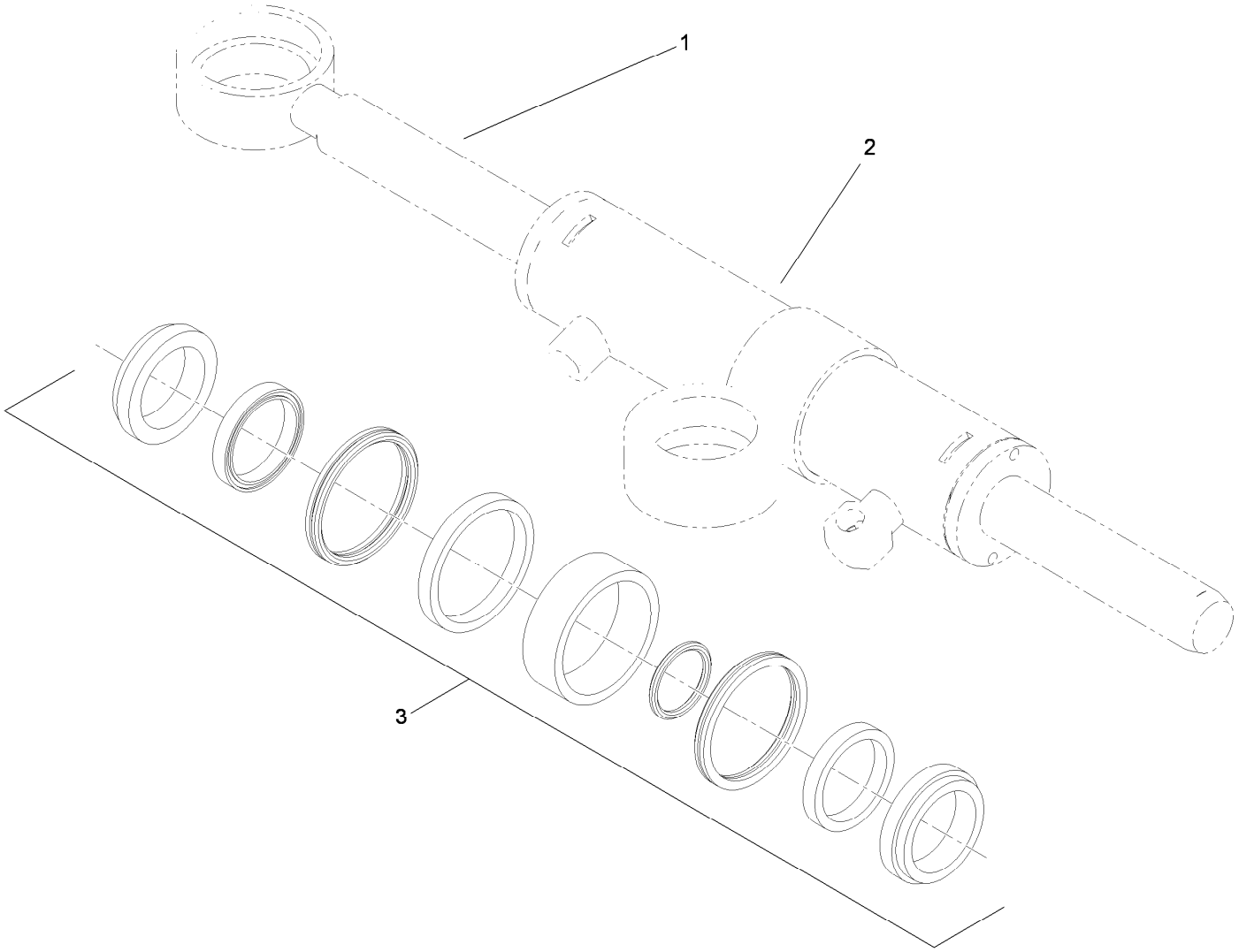

Hydraulic Cylinder Assembly No. 114-8349

Ref.	*Part Number*	*Qty.*	*Description*
1		1	Rod-Cylinder ●
2		1	Body-Cylinder ●
3	115-2160	1	Cylinder Repair Kit

● Not serviced separately

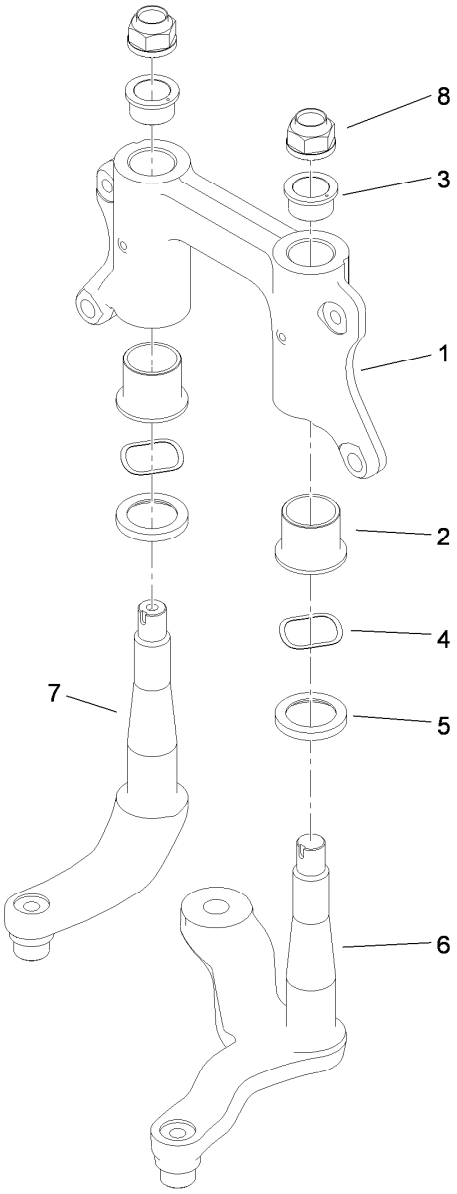

Steering Linkage Assembly

Ref.	*Part Number*	*Qty.*	*Description*
1	114-8389	1	Mount-Pivot
2	69-6470	2	Bushing-Castor
3	112-1626	2	Bushing-Flange
4	93-4632	2	Washer-Wavey
5	86-6560	2	Washer-Thrust
6	114-8256	1	Arm-Pitman
7	114-8298	1	Arm-Idler
8	115-2164	2	Nut-Spindle

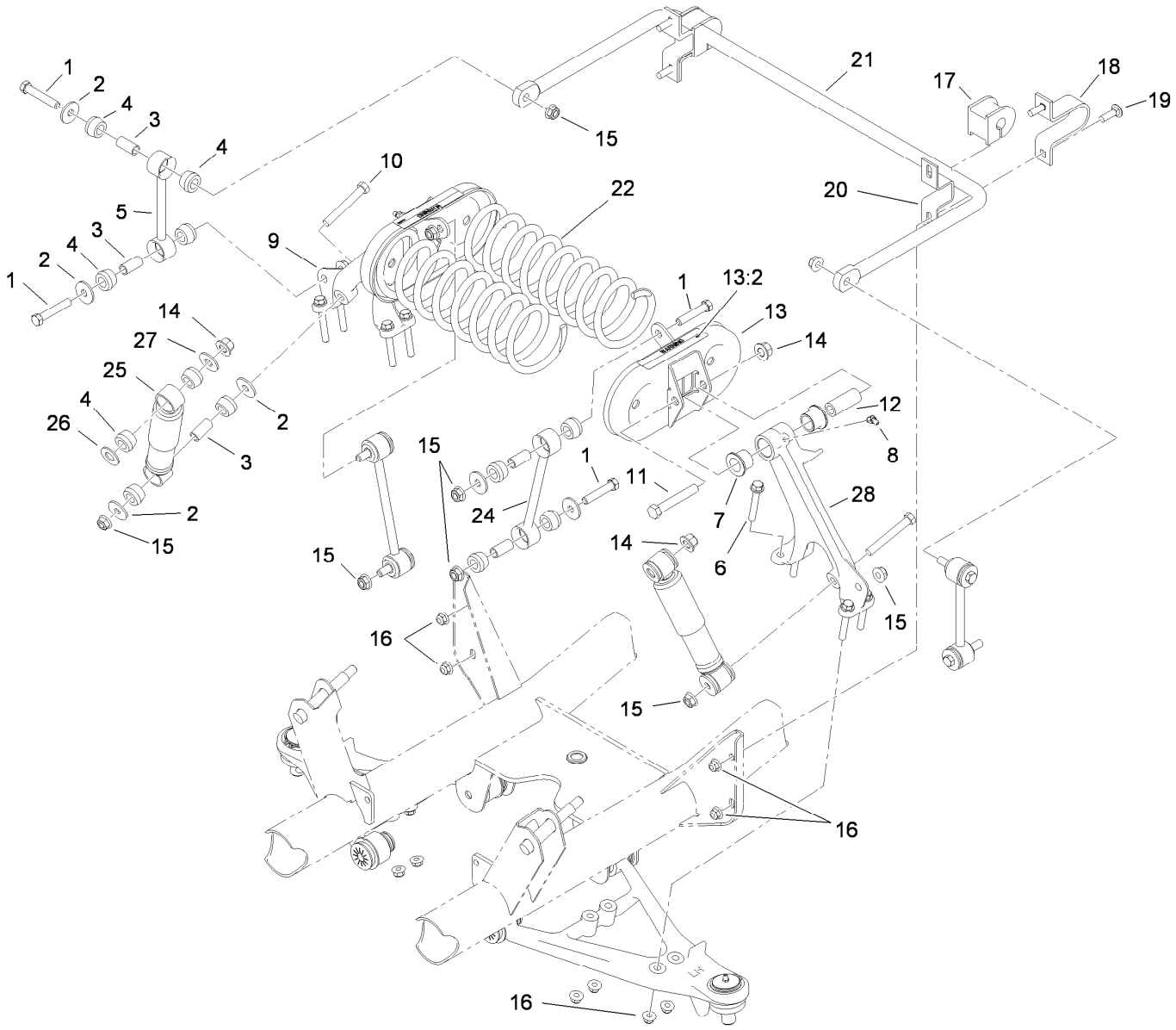

Front Suspension Assembly

Ref.	Part Number	Qty.	Description
1	324-10	8	Screw-HH
2	87-5330	12	Washer
3	87-3600	10	Spacer-Absorber, Shock
4	87-3920	24	Bushing
5	87-3860-03	2	Link-Sway Bar, Anti
6	3234-39	8	Screw-HHF
7	33-3090	4	Bushing
8	302-11	2	Fitting-Lube, 45 DEG
9	87-0150	1	Tower-Control Arm, RH
10	324-13	2	Screw-HH
11	325-13	2	Screw-HH
12	87-2500	2	Sleeve-Spring, Pivot
13	105-7958	2	Spring Cradle ASM
13:2	93-9879	1	Decal-Warning

Ref.	Part Number	Qty.	Description
14	99-5107	4	Nut-Lock
15	114-8417	10	Nut-HF, NI
16	104-8301	12	Nut-HF, NI
17	87-3910	2	Bushing-Rubber
18	87-4010-03	2	Clamp-Bar, Sway
19	3231-25	4	Bolt-CARR
20	87-3890-03	2	Bracket-Bar, Sway
21	87-3850-03	1	Bar-Sway, Anti
22	105-4183-01	2	Spring-Compression
24	106-2302-03	2	Link-Stabilizer
25	87-3110	2	Absorber-Shock
26	3256-27	2	Washer-Flat
27	3256-6	2	Washer-Flat
28	87-0160	1	Tower-Control Arm, LH

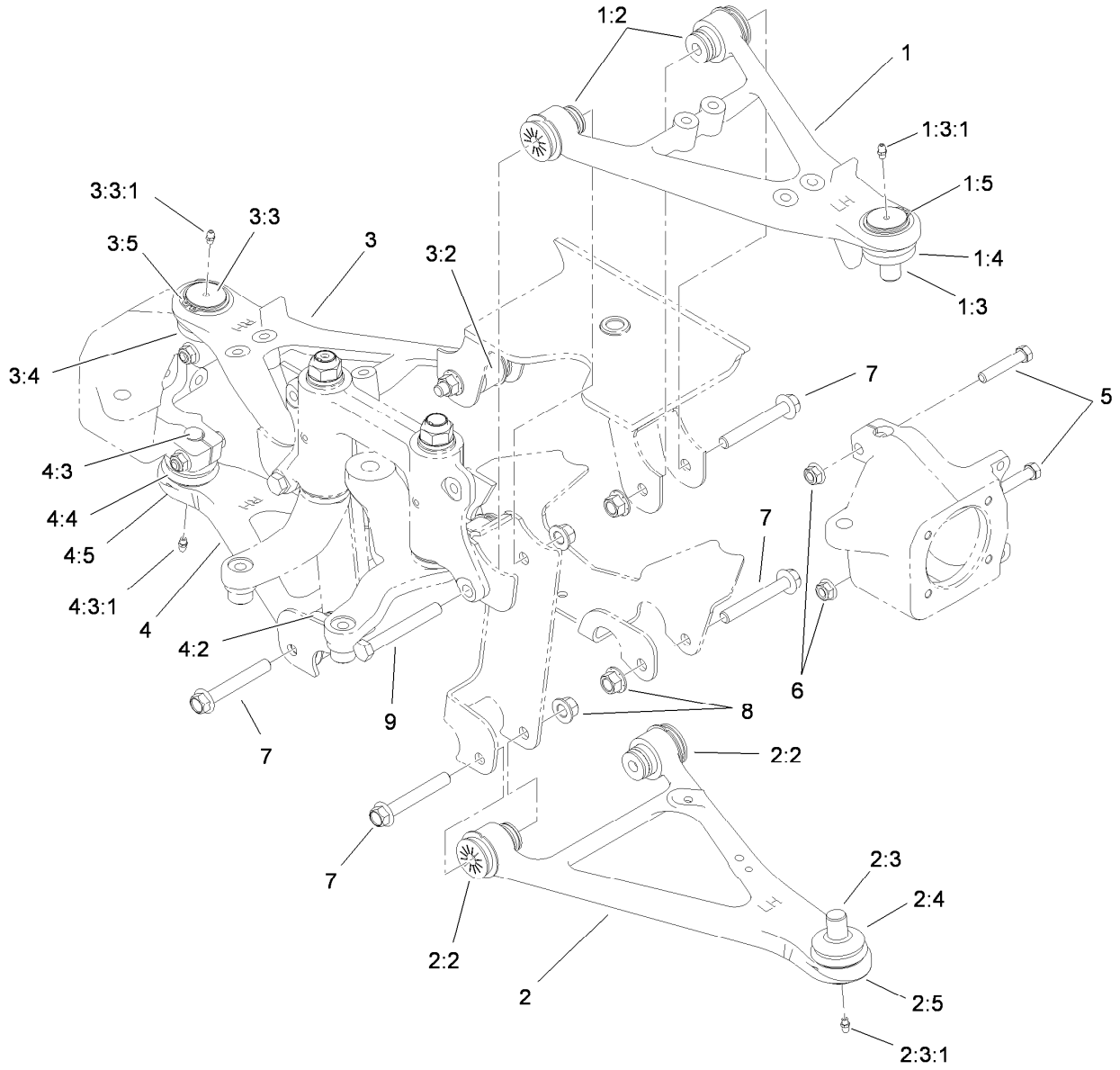

Front Control Arm Assembly

Ref.	*Part Number*	*Qty.*	*Description*
1	115-2404	1	Upper LH Control Arm ASM
1:2	87-1450	2	Bushing-Flange
1:3	115-2165	1	Ball Joint
1:3:1	302-5	1	Fitting-Grease
1:4	87-2420	1	Seal-Joint, Ball
1:5	32151-104	1	Ring-Retaining, External
2	115-2405	1	Lower LH Control Arm ASM
2:2	87-1450	2	Bushing-Flange
2:3	115-2165	1	Ball Joint
2:3:1	302-5	1	Fitting-Grease
2:4	87-2420	1	Seal-Joint, Ball
2:5	32151-104	1	Ring-Retaining, External
3	115-2406	1	Upper RH Control Arm ASM
3:2	87-1450	2	Bushing-Flange
3:3	115-2165	1	Ball Joint

Ref.	*Part Number*	*Qty.*	*Description*
3:3:1	302-5	1	Fitting-Grease
3:4	87-2420	1	Seal-Joint, Ball
3:5	32151-104	1	Ring-Retaining, External
4	115-2407	1	Lower RH Control Arm ASM
4:2	87-1450	2	Bushing-Flange
4:3	115-2165	1	Ball Joint
4:3:1	302-5	1	Fitting-Grease
4:4	87-2420	1	Seal-Joint, Ball
4:5	32151-104	1	Ring-Retaining, External
5	324-10	4	Screw-HH
6	114-8417	4	Nut-HF, NI
7	114-8419	6	Screw-HHF
8	99-5107	8	Nut-Lock
9	325-17	2	Screw-HH

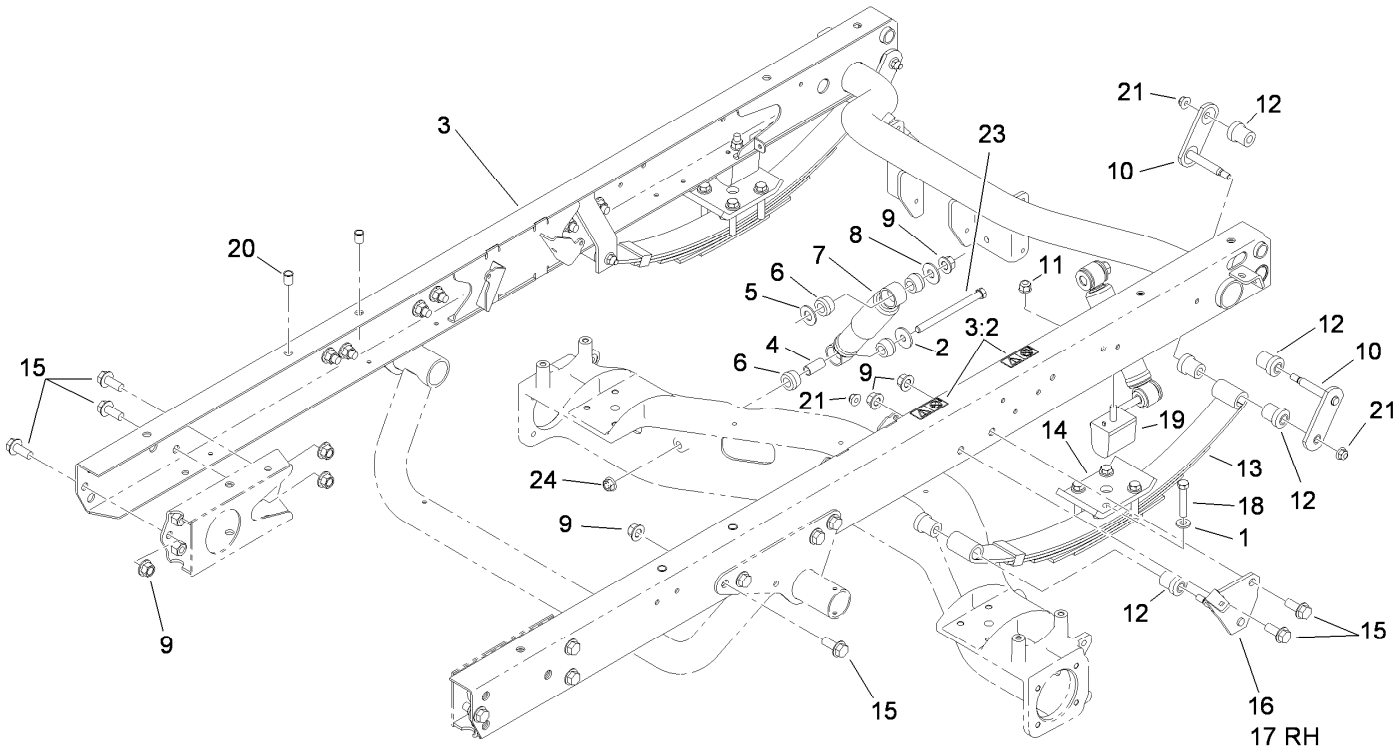

Rear Frame Assembly

Ref.	Part Number	Qty.	Description
1	87-7480	8	Washer
2	87-5330	2	Washer
3	115-7911	1	Rear Frame ASM
3:2	115-2047	2	Decal-Surface, Hot
4	87-3600	2	Spacer-Absorber, Shock
5	3256-27	2	Washer-Flat
6	87-3920	8	Bushing
7	87-3110	2	Absorber-Shock
8	3256-6	2	Washer-Flat
9	99-5107	20	Nut-Lock
10	87-3980	4	Shackle ASM
11	103-9511	2	Nut-Lock, NI

Ref.	Part Number	Qty.	Description
12	87-4760	12	Bushing-Rubber
13	87-1490	2	Spring-Leaf, Rear
14	87-7470-03	2	Plate-Spring, Clamp
15	3234-38	18	Screw-HHF
16	87-3960	1	Mount-Spring, LH
17	87-3940	1	Mount-Spring, RH
18	115-2398	8	Bolt-HH
19	87-3470	2	Bumper
20	32148-9	4	Nut-Clinch
21	104-8301	6	Nut-HF, NI
23	114-8424	2	Screw-HH
24	114-8417	2	Nut-HF, NI

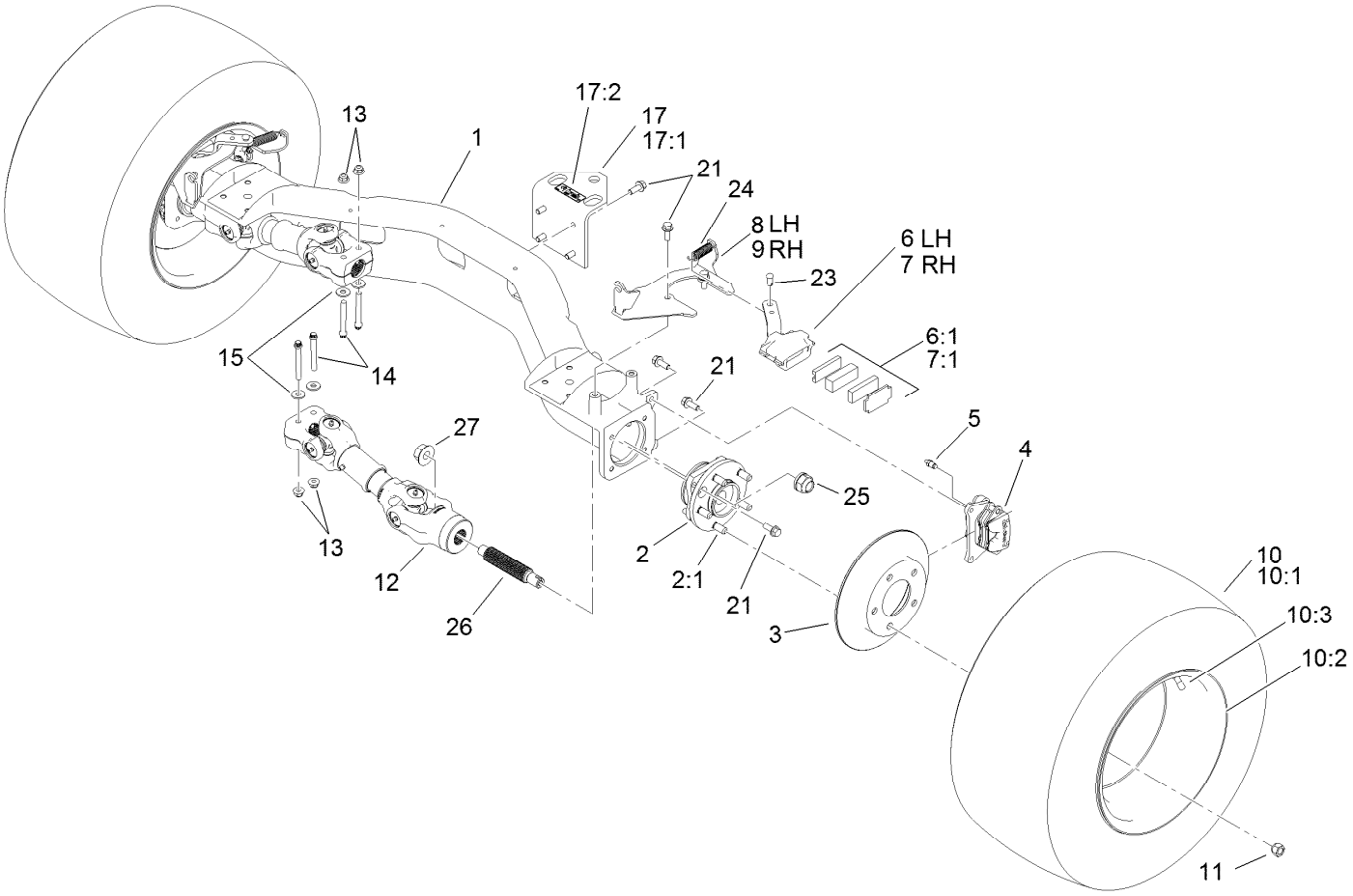

Rear Axle Assembly

Ref.	Part Number	Qty.	Description
1	119-9515	1	Axle-Rear
2	112-3214	2	Wheel Hub ASM
2:1	114-8299	5	Stud-Wheel
3	114-8351	2	Rotor-Brake
4	119-9535	2	Brake Caliper ASM
5	119-9509	2	Screw-Bleed
6	114-8365	1	Caliper-Mechanical, LH
6:1	115-7847	1	Parking Brake Pad Kit
7	114-8366	1	Caliper-Mechanical, RH
7:1	115-7847	1	Parking Brake Pad Kit
8	115-2362-03	1	Bracket-Caliper, LH
9	115-2359-03	1	Bracket-Caliper, RH
10		2	Tire And Wheel ASM ●
10:1	106-7868	1	Tire
10:2	114-8259	1	Wheel

Ref.	Part Number	Qty.	Description
10:3	232-27	1	Stem-Valve
11	242-50	10	Nut-Lug
12	114-8367	2	Driveshaft ASM
13	104-8301	4	Nut-HF, NI
14	98-2939	4	Screw-Cap
15	80-6990	4	Washer-Hardened
17	115-7742	1	Hitch ASM
17:1	92-5951-03	1	Angle-Hitch
17:2	115-7740	1	Decal-Load, Towing
21	3234-11	20	Screw-HHF
23	283-85	2	Pin-Clevis
24	104-6415	2	Spring-Return, Pedal
25	115-2164	2	Nut-Spindle
26	115-7771	2	Shaft, Splined
27	104-0753	2	Nut-Flange

● Not serviced separately

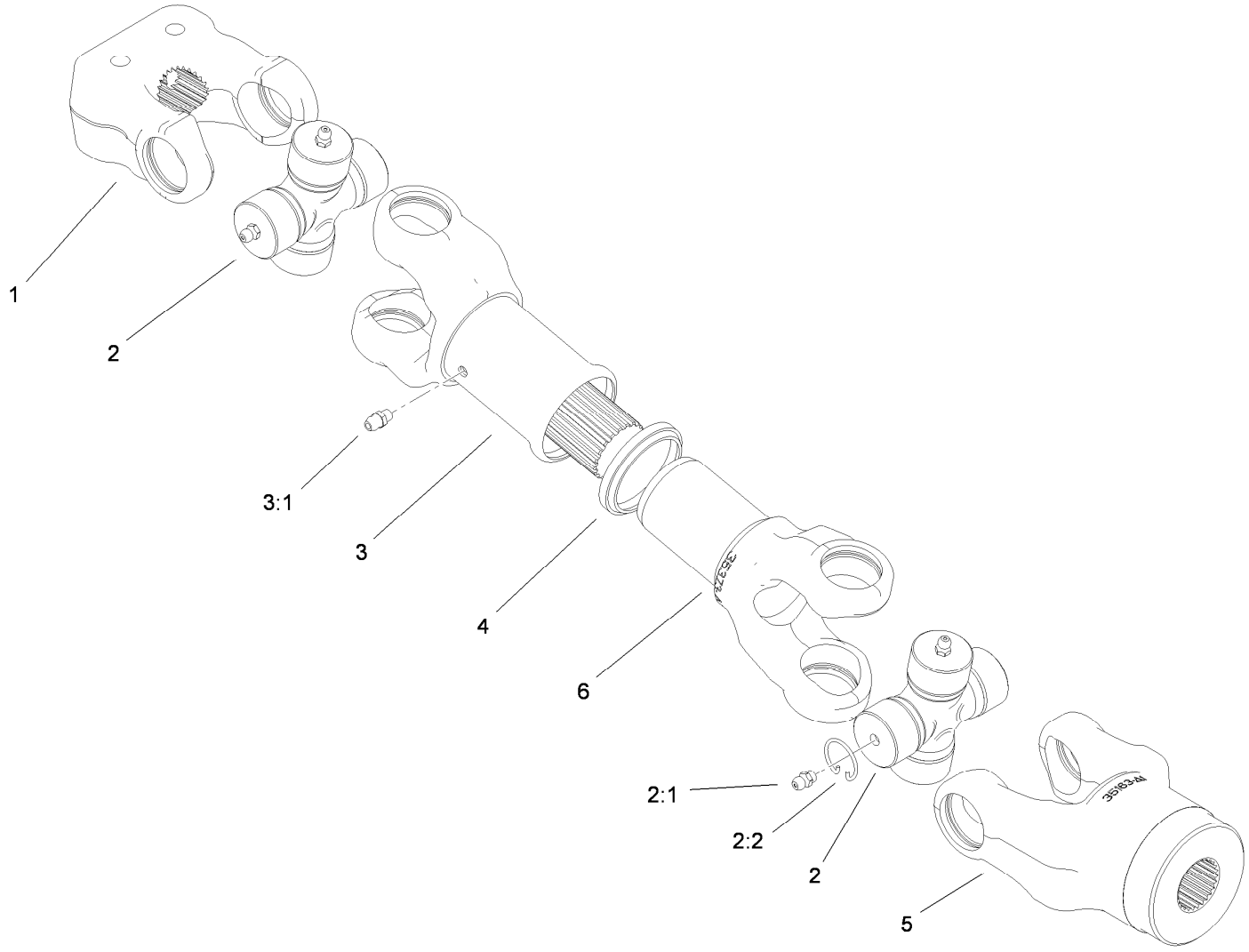

Driveshaft Assembly No. 114-8367

Ref.	*Part Number*	*Qty.*	*Description*
1	98-2940	1	Yoke
2	92-4187	2	Cross And Bearing Kit
2:1	302-58	4	Fitting-Straight
2:2	92-4188	4	Ring-Snap
3	92-4179	1	Yoke-Tube, Shaft And Seal
3:1	302-5	1	Fitting-Grease
4	92-4180	1	Seal
5	115-2351	1	Yoke
6	92-4182	1	Yoke-Telescoping

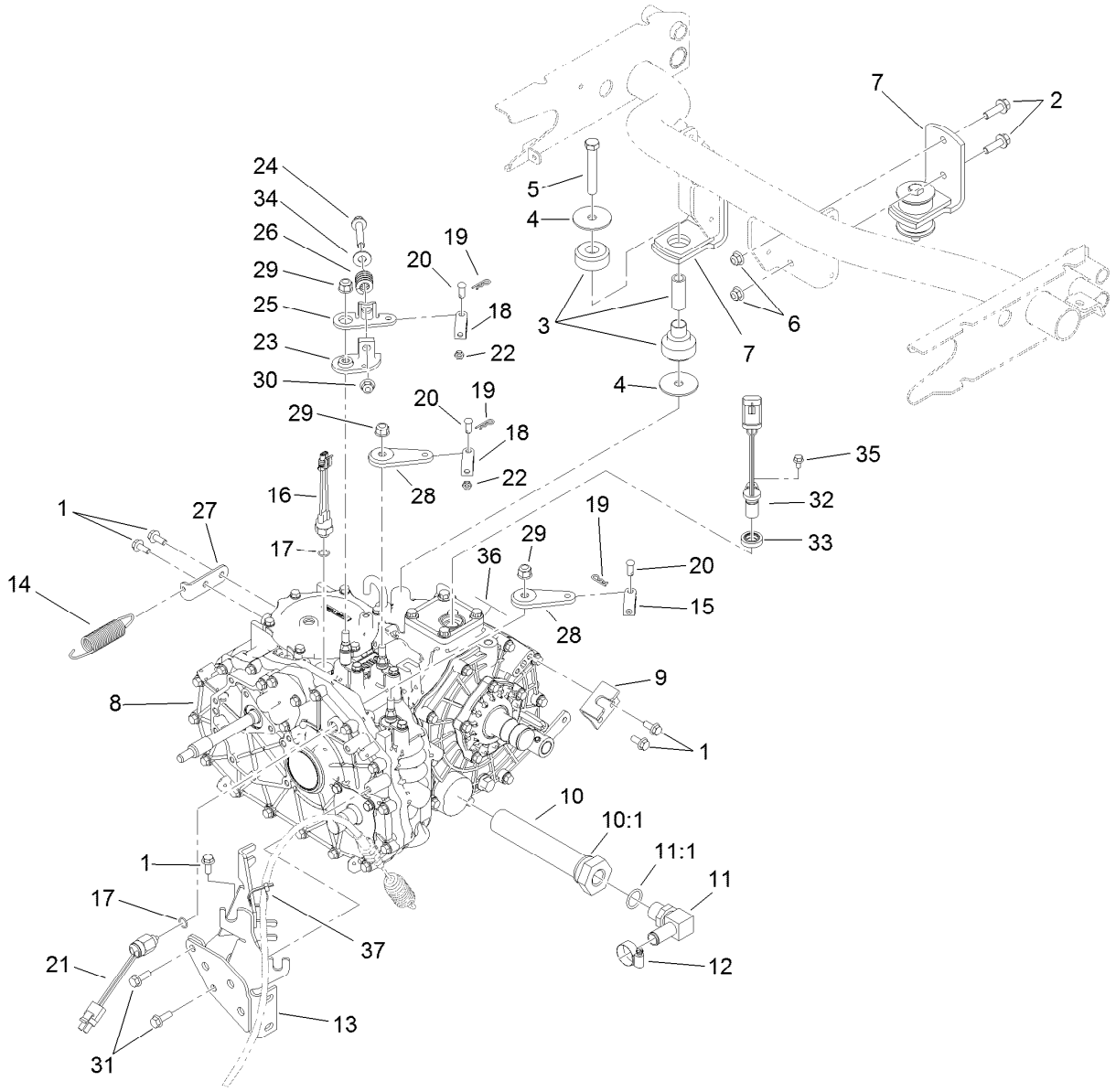

Transaxle Assembly

Ref.	Part Number	Qty.	Description
1	98-7977	5	Screw-HHF
2	3234-24	4	Screw-HHF
3	106-7865	2	Mount-Engine
4	87-5100	4	Washer-Snubbing
5	33116-080	2	Screw-HH
6	104-8301	4	Nut-HF, NI
7	87-5800-03	2	Mount-Transaxle
8	115-2175	1	4 Wheel Drive Transaxle ASM
9	87-4470	1	Bracket-Lock, Differential
10	87-3990	1	Strainer-Transaxle
10:1	237-123	1	O-Ring
11	353-987	1	Fitting-Elbow, 90
11:1	237-81	1	O-Ring
12	2412-129	1	Clamp-Hose
13	105-4207-03	1	Mount-Cable
14	68-9950	1	Spring-Traction
15	87-7160	1	Clevis-Cable
16	72-4310	1	Switch-Ball
17	237-30	2	O-Ring

Ref.	Part Number	Qty.	Description
18	87-2310	2	Clevis-Cable
19	3290-307	3	Pin-Cotter
20	283-62	3	Pin-Clevis
21	87-6710	1	Switch-Transmission
22	3220-1	2	Nut-Jam
23	87-7970	1	Arm-Shift
24	66-9302	1	Screw-HHF, Whiz
25	87-8250	1	Plate-Arm, Shift
26	87-6910	1	Spring-Compression
27	115-2240-03	1	Bracket-Fuel
28	87-7960	2	Lever-Shift
29	103-9511	3	Nut-Lock, NI
30	3290-357	1	Nut-HHF, Whiz
31	33104-025	2	Screw-HHF
32	120-4800	1	Sensor-Geartooth
33	92-3735	1	Seal-Sensor, Oil
34	3256-4	1	Washer-Flat
35	33103-012	1	Screw-HHF
36	115-7741	1	Decal-Oil, Transmission
37	3290-379	1	Tie-Cable

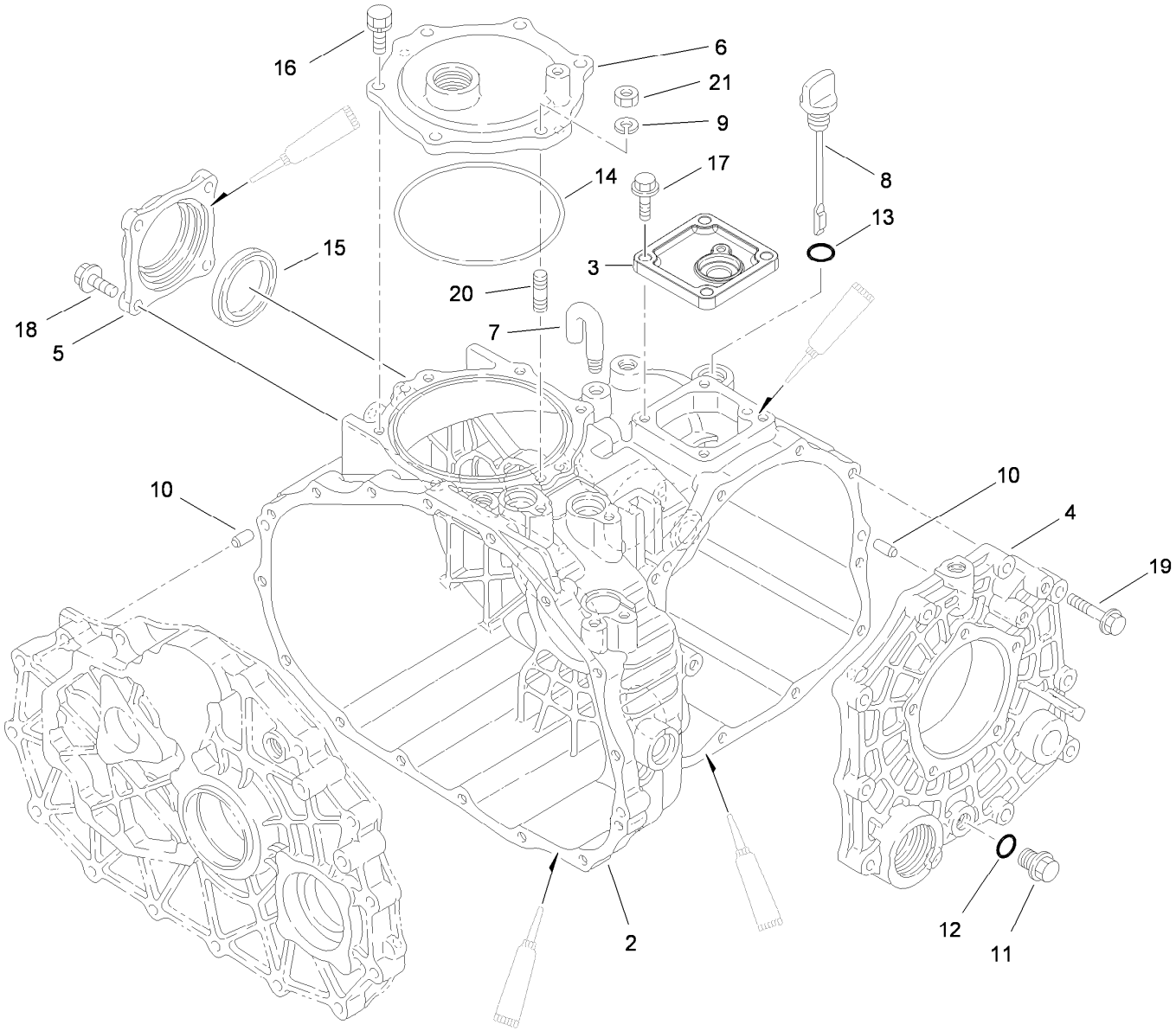

Case Assembly
4 Wheel Drive Transaxle Assembly No. 115-2175

Ref.	*Part Number*	*Qty.*	*Description*
2	92-0651	1	Case-Transmission
3	92-0810	1	Cover-Upper, Sensor
4	92-0653	1	Cover-Side
5	92-0655	1	Cover-Seal, Axle
6	92-0656	1	Cover-Upper, PTO
7	92-0743	1	Breather-Air
8	92-0662	1	Cap-Oil
9	92-0762	1	Washer-Spring
10	92-0765	4	Pin-Parallel
11	92-0773	1	Plug-Drain

Ref.	*Part Number*	*Qty.*	*Description*
12	92-0787	1	O-Ring
13	92-0788	1	O-Ring
14	92-0790	1	O-Ring
15	92-0793	1	Seal-Oil
16	92-0796	5	Bolt
17	33104-025	4	Screw-HHF
18	33104-025	4	Screw-HHF
19	33104-040	10	Screw-HHF
20	92-0805	1	Bolt 8X20
21	68-9400	1	Nut-Flange

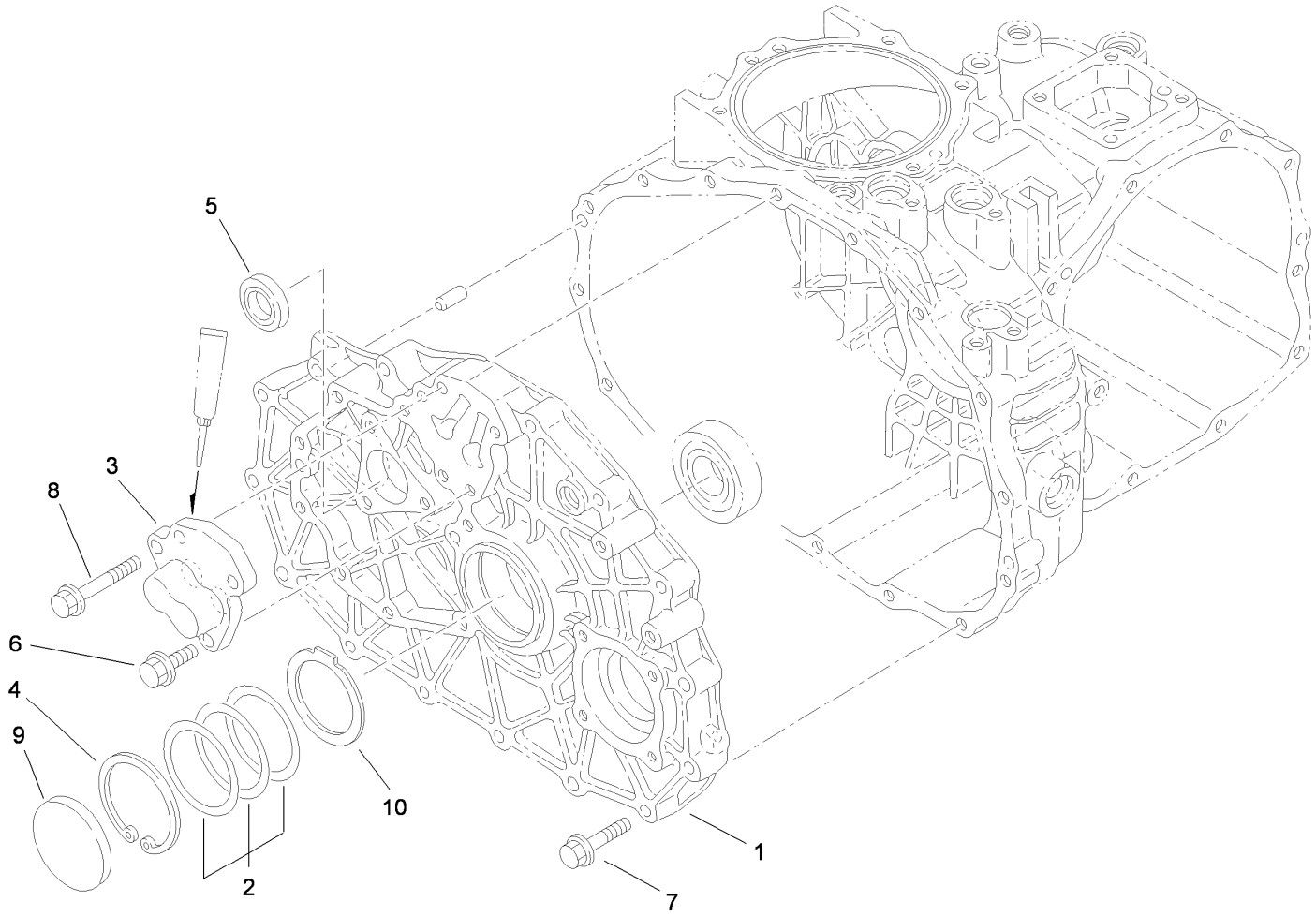

Center Plate Assembly
4 Wheel Drive Transaxle Assembly No. 115-2175

Ref.	*Part Number*	*Qty.*	*Description*
1	100-4462	1	Plate-Center, 4Wd
2	100-4460	1	Shim-Set
3	92-0706	1	Shaft-Fork
4	92-0759	1	Ring-Snap
5	92-0791	1	Seal-Oil
6	33104-025	3	Screw-HHF
7	33104-040	15	Screw-HHF
8	33104-050	1	Screw-HHF
9	92-0807	1	Cap-Sealing
10	100-4465	1	Shim (W/Tab)

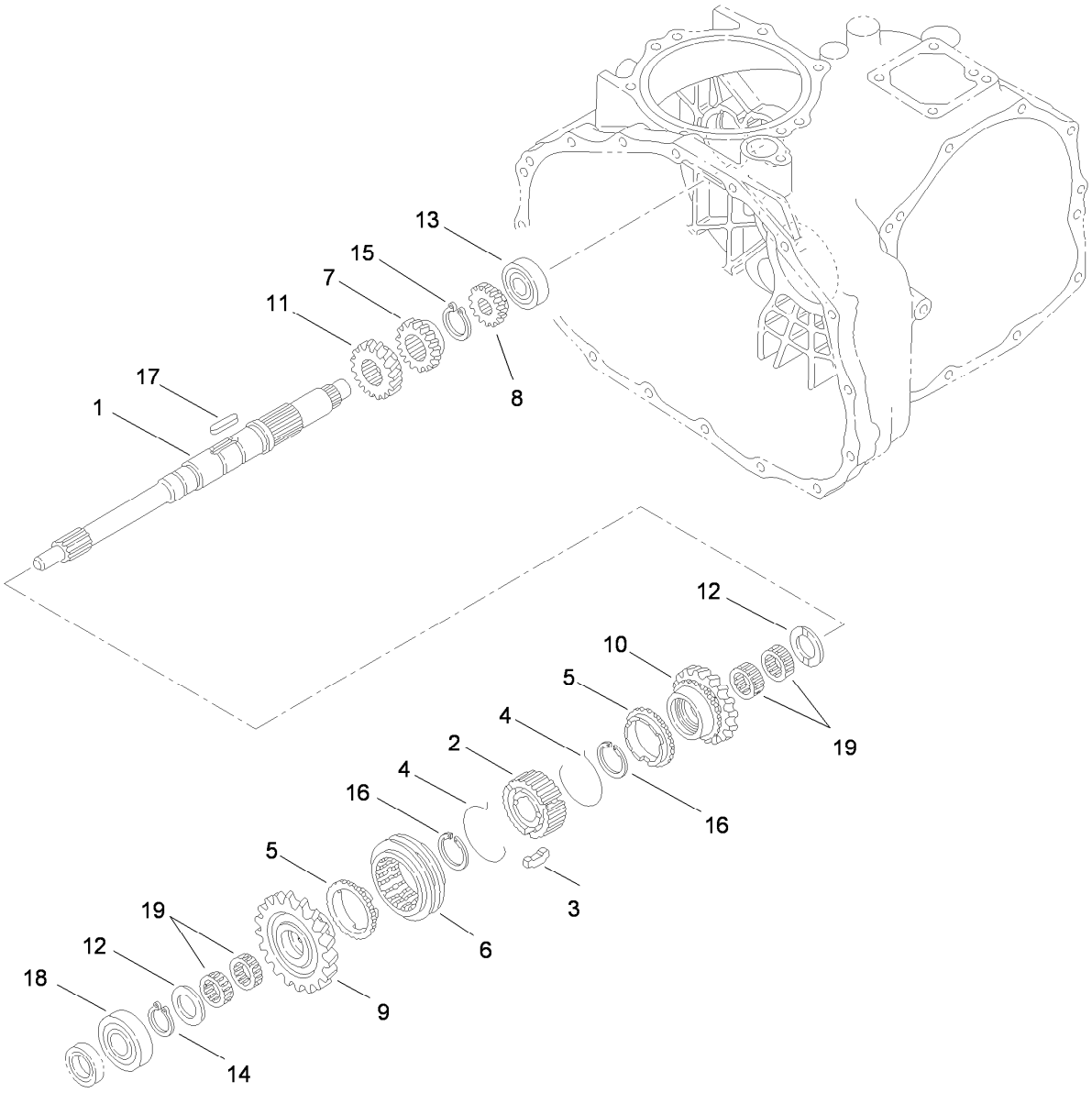

Main Shaft Assembly
4 Wheel Drive Transaxle Assembly No. 115-2175

Ref.	*Part Number*	*Qty.*	*Description*
1	92-0663	1	Shaft-Main
2	92-0664	1	Hub-Synchro
3	92-0665	3	Key-Synchro
4	92-0666	2	Spring-Synchro
5	92-0667	2	Ring-Synchro
6	92-0668	1	Shifter-Synchro
7	92-0672	1	Gear-Main, 18 Tooth
8	92-0673	1	Gear-Main, 14 Tooth
9	110-2521	1	Gear-Main, 27 Tooth
10	110-2522	1	Gear- Main, 24 Tooth

Ref.	*Part Number*	*Qty.*	*Description*
11	92-0687	1	Gear-Main, 16 Tooth
12	92-0740	2	Washer-Thrust
13	92-0650	1	Bearing
14	92-0753	1	Ring-Snap
15	92-0754	1	Ring-Snap
16	92-0763	2	Ring-Snap
17	92-0772	1	Key
18	251-8	1	Bearing-Ball
19	92-0781	4	Bearing-Needle

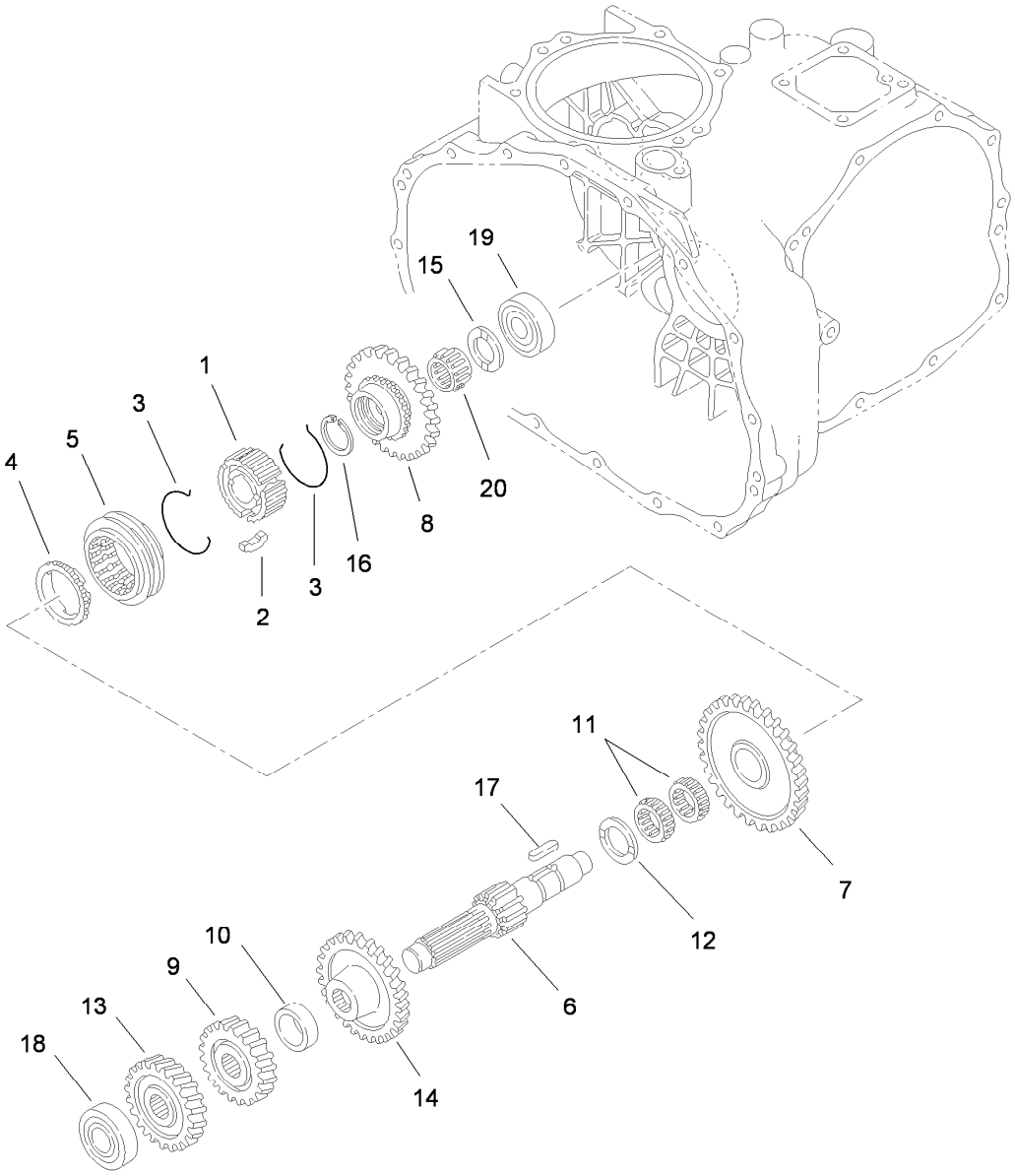

Reduction Shaft Assembly
4 Wheel Drive Transaxle Assembly No. 115-2175

Ref.	*Part Number*	*Qty.*	*Description*
1	92-0664	1	Hub-Synchro
2	92-0665	3	Key-Synchro
3	92-0666	2	Spring-Synchro
4	92-0667	1	Ring-Synchro
5	92-0668	1	Shifter-Synchro
6	92-0674	1	Shaft-Reduction
7	110-2524	1	Gear- Reduction, 49 Tooth
8	92-0819	1	Gear-Reduction, 40 Tooth
9	92-0769	1	Pin-Roll
10	92-0680	1	Collar

Ref.	*Part Number*	*Qty.*	*Description*
11	92-0681	2	Bearing-Needle
12	92-0682	1	Washer-Thrust
13	92-0822	1	Gear-Reduction, 28 Tooth
14	92-0823	1	Gear-Reduction, 43 Tooth
15	92-0740	1	Washer-Thrust
16	92-0673	1	Gear-Main, 14 Tooth
17	92-0772	1	Key
18	105-7985	1	Bearing
19	92-0778	1	Bearing
20	92-0782	1	Bearing-Needle

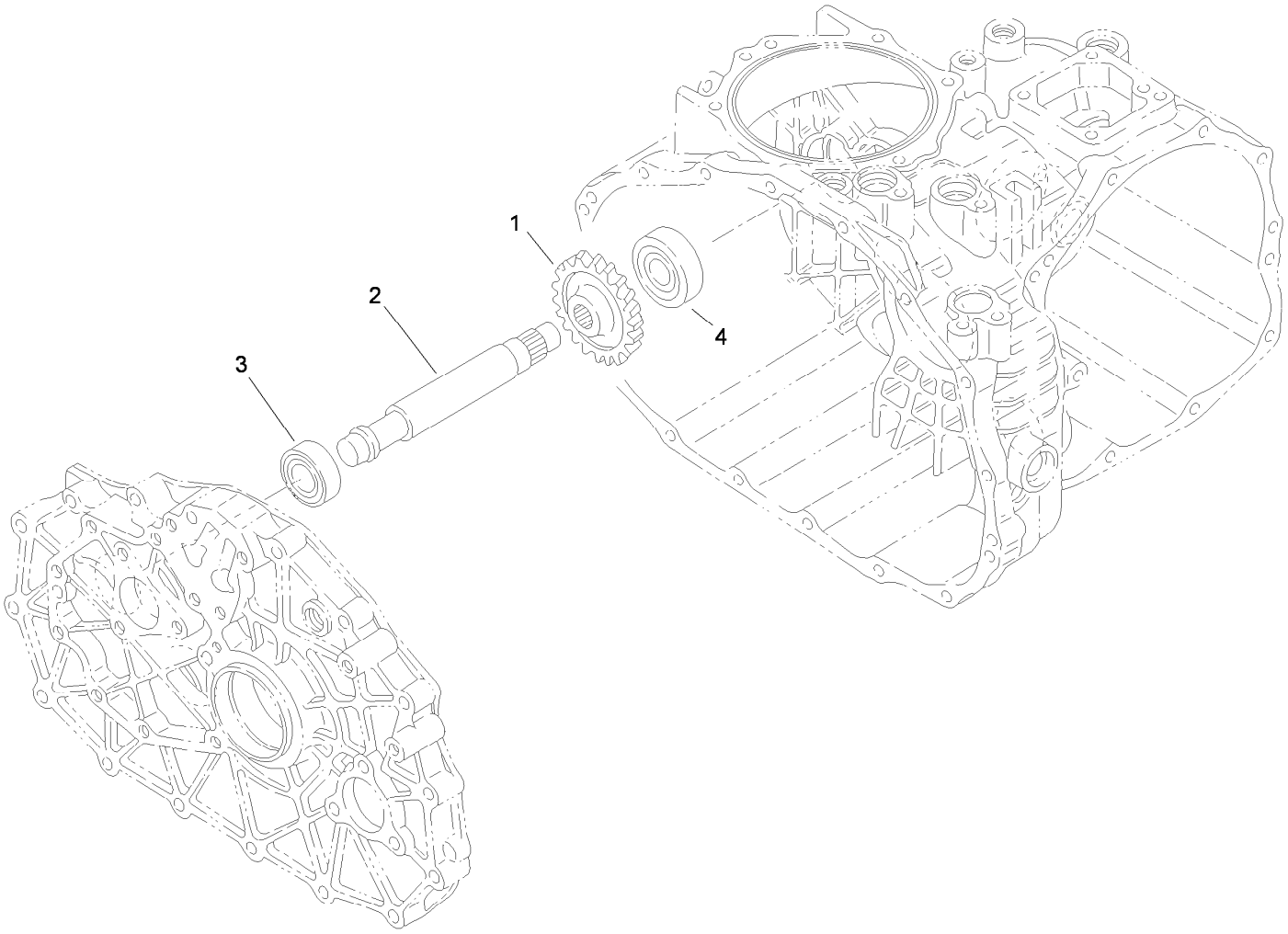

Reverse Shaft Assembly
4 Wheel Drive Transaxle Assembly No. 115-2175

Ref.	*Part Number*	*Qty.*	*Description*
1	92-0684	1	Gear-Reverse, 33 Tooth
2	92-0824	1	Shaft-Idler, Reverse
3	251-346	1	Bearing-Ball
4	92-0778	1	Bearing

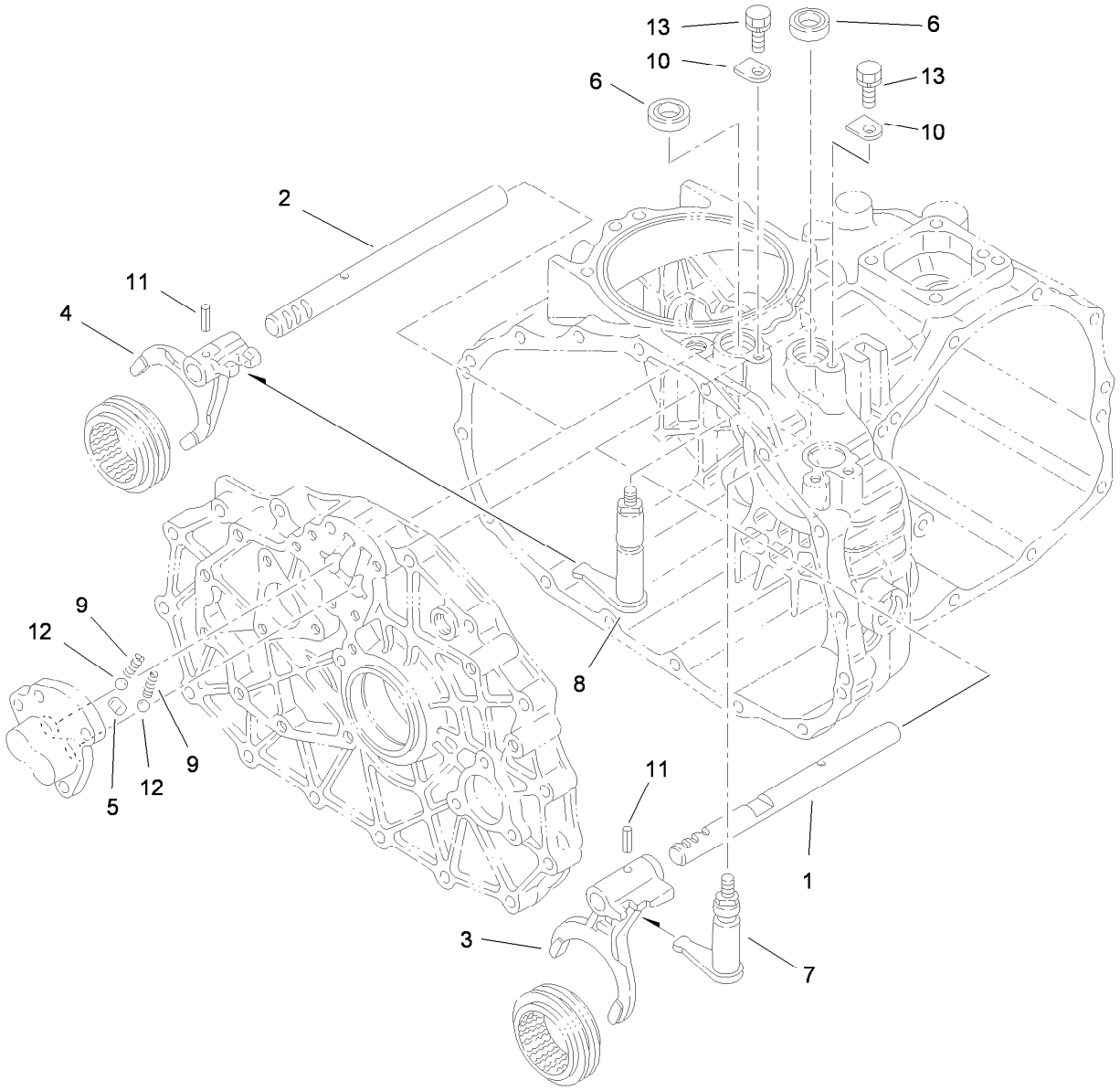

Main Shift Assembly
4 Wheel Drive Transaxle Assembly No. 115-2175

Ref.	*Part Number*	*Qty.*	*Description*
1	92-0698	1	Shaft-Fork
2	92-0699	1	Shaft-Fork
3	92-0700	1	Fork-Shift
4	92-0701	1	Fork-Shift
5	92-0705	1	Lock-Spindle
6	92-0729	2	Seal-Oil
7	92-0816	1	Arm-Shift
8	92-0817	1	Arm-Shift
9	92-0731	2	Spring
10	92-0732	2	Plate-Keeper
11	92-0769	2	Pin-Roll
12	92-0785	2	Ball-Steel
13	33104-016	2	Screw-HHF

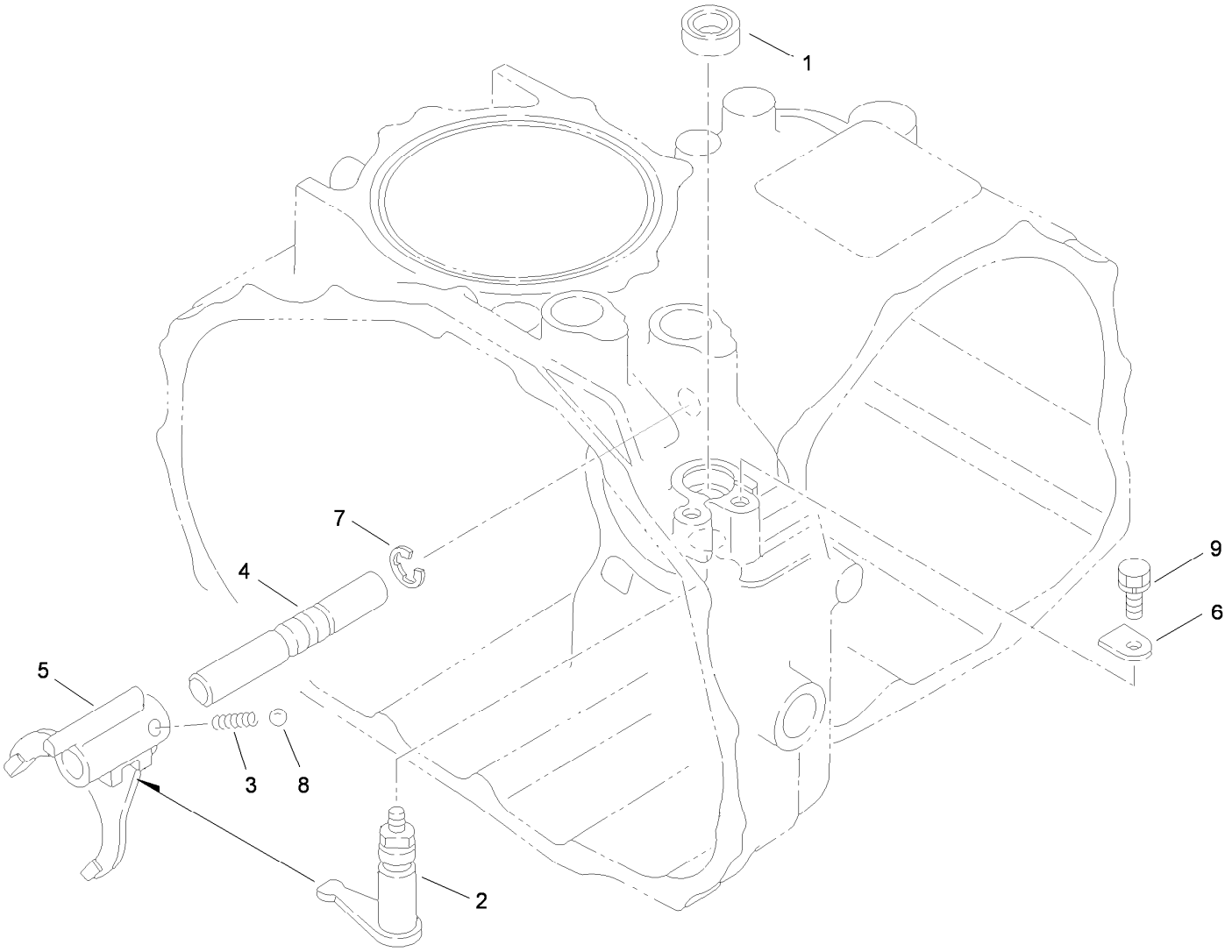

Hi-Lo Shift Assembly
4 Wheel Drive Transaxle Assembly No. 115-2175

Ref.	*Part Number*	*Qty.*	*Description*
1	92-0729	1	Seal-Oil
2	92-0818	1	Arm-Shift
3	92-0731	1	Spring
4	92-0708	1	Shaft-Fork
5	92-0709	1	Fork-Shift
6	92-0732	1	Plate-Keeper
7	92-0761	1	Ring-E
8	92-0785	1	Ball-Steel
9	33104-016	1	Screw-HHF

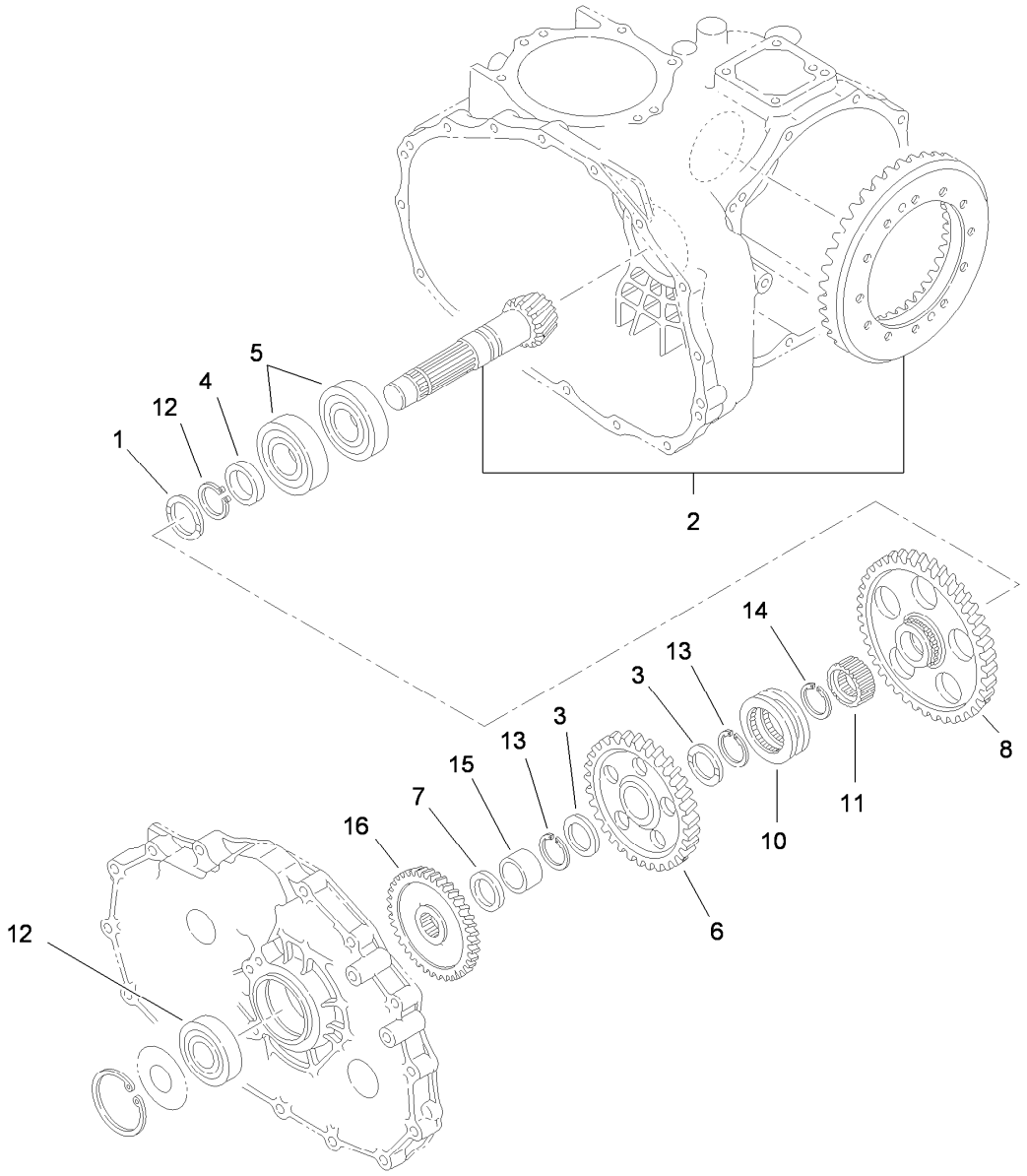

Countershaft Assembly
4 Wheel Drive Transaxle Assembly No. 115-2175

Ref.	*Part Number*	*Qty.*	*Description*
1	92-0741	1	Washer-Thrust
2	105-7983	1	Countershaft And Ring Gear ASM
3	92-0711	2	Washer-Thrust
4	92-0713	1	Collar
5	92-0714	2	Bearing
6	92-0715	1	Gear-Countershaft
7	92-0716	1	Collar
8	92-0717	1	Gear-Countershaft
10	92-0718	1	Shifter
11	105-7986	1	Collar-Spline
12	92-0712	1	Bearing-Ball
13	105-7987	2	Ring-Snap
14	92-0755	1	Ring-Snap
15	92-0783	1	Race-Inner
16	92-5186	1	Pinion

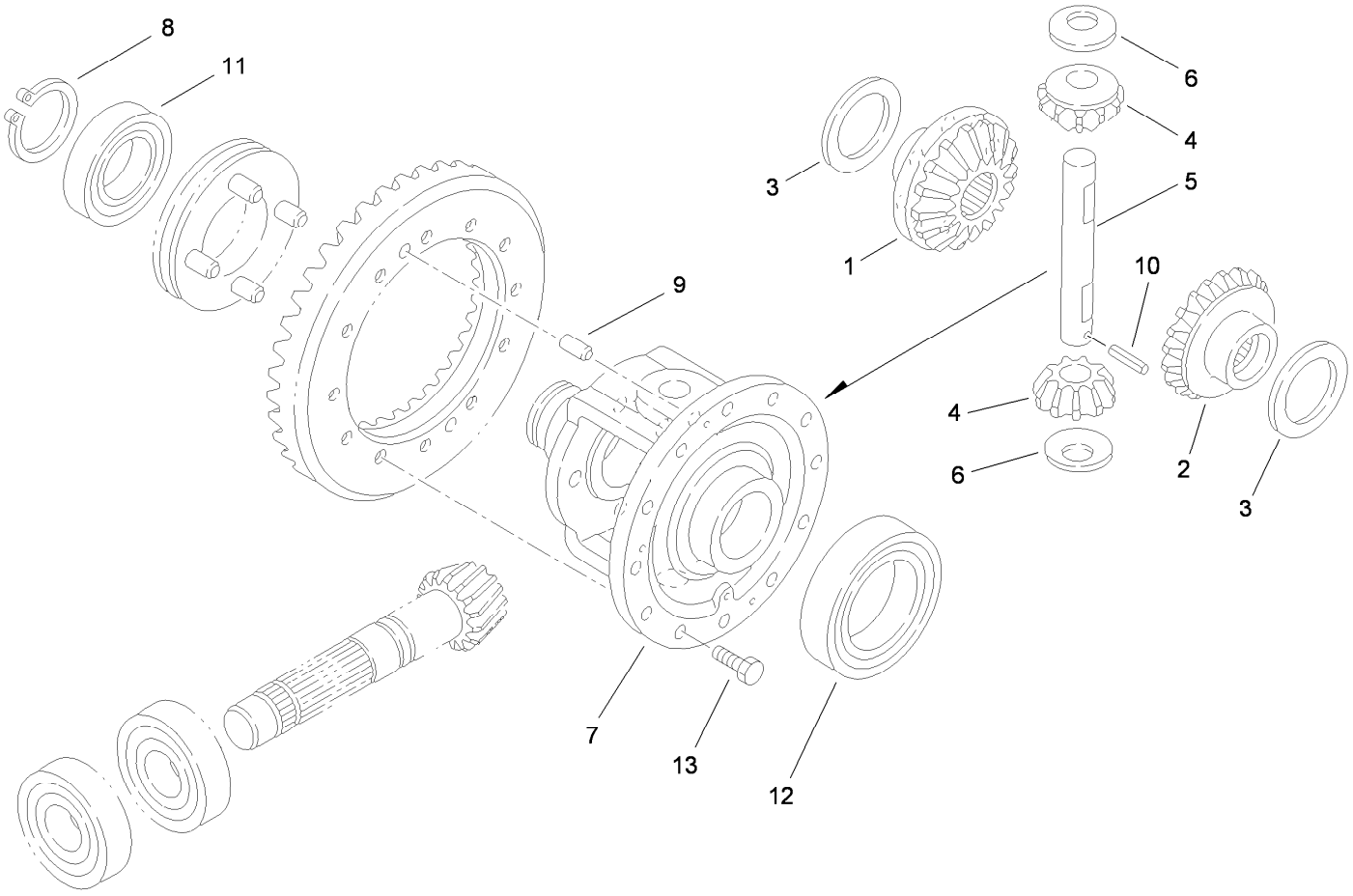

Differential Gear Assembly
4 Wheel Drive Transaxle Assembly No. 115-2175

Ref.	*Part Number*	*Qty.*	*Description*
1	92-0745	1	Gear-Side, LH
2	92-0746	1	Gear-Side, RH
3	92-0747	2	Side-Gear, Left Inner
4	92-0748	2	Pinion-Differential
5	92-0749	1	Shaft-Pinion
6	92-0750	2	Washer
7	92-0720	1	Case-Differential
8	92-0756	1	Ring-Snap
9	92-0765	2	Pin-Parallel
10	92-0768	1	Pin-Roll, Spring
11	92-0775	1	Bearing
12	92-0776	1	Bearing
13	92-0803	12	Bolt

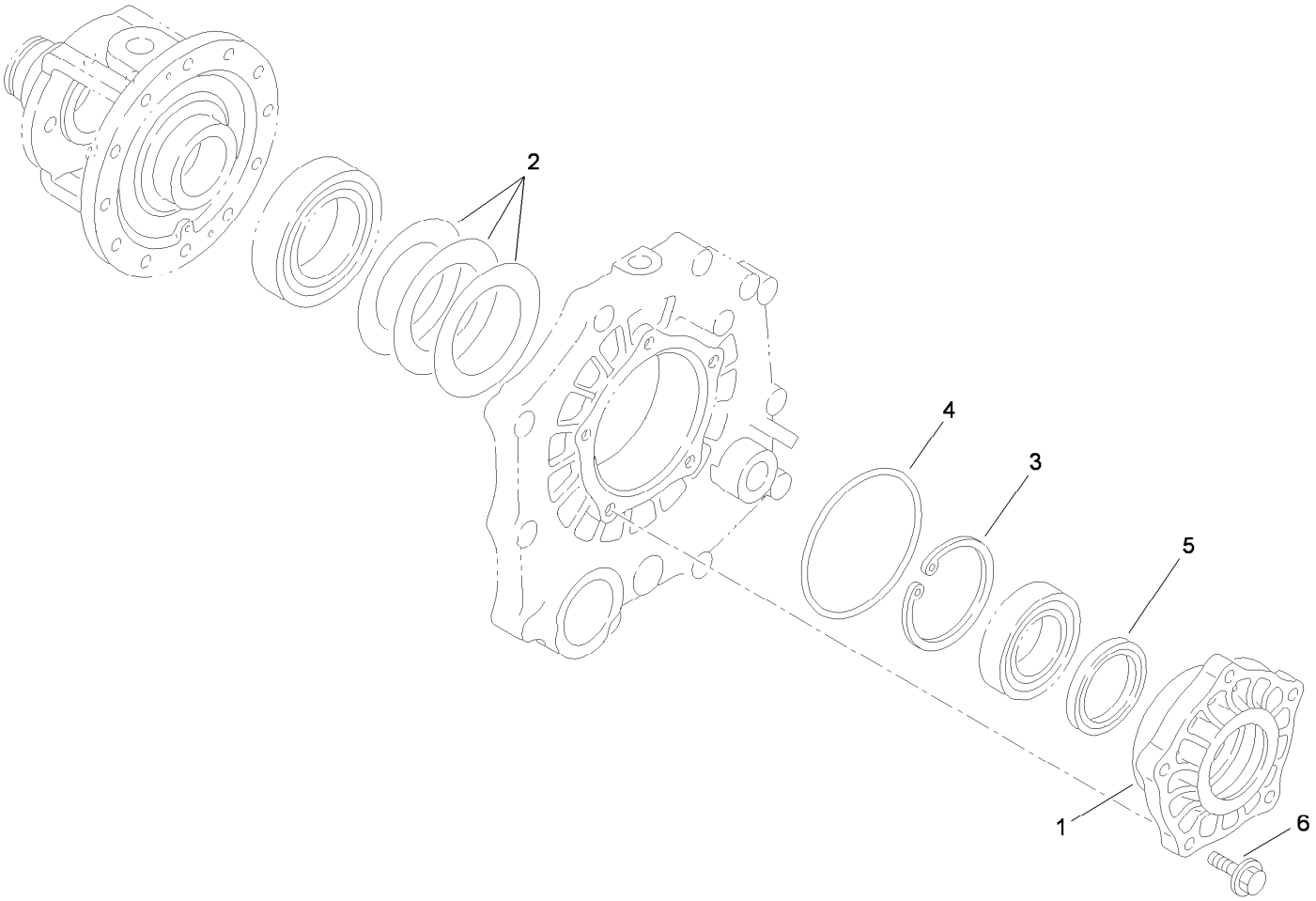

Differential Carrier Assembly
4 Wheel Drive Transaxle Assembly No. 115-2175

Ref.	*Part Number*	*Qty.*	*Description*
1	92-0654	1	Carrier-Differential
2	92-0809	1	Set-Shim
3	92-0760	1	Ring-Snap
4	92-0789	1	O-Ring
5	92-0793	1	Seal-Oil
6	33104-030	5	Screw-HHF

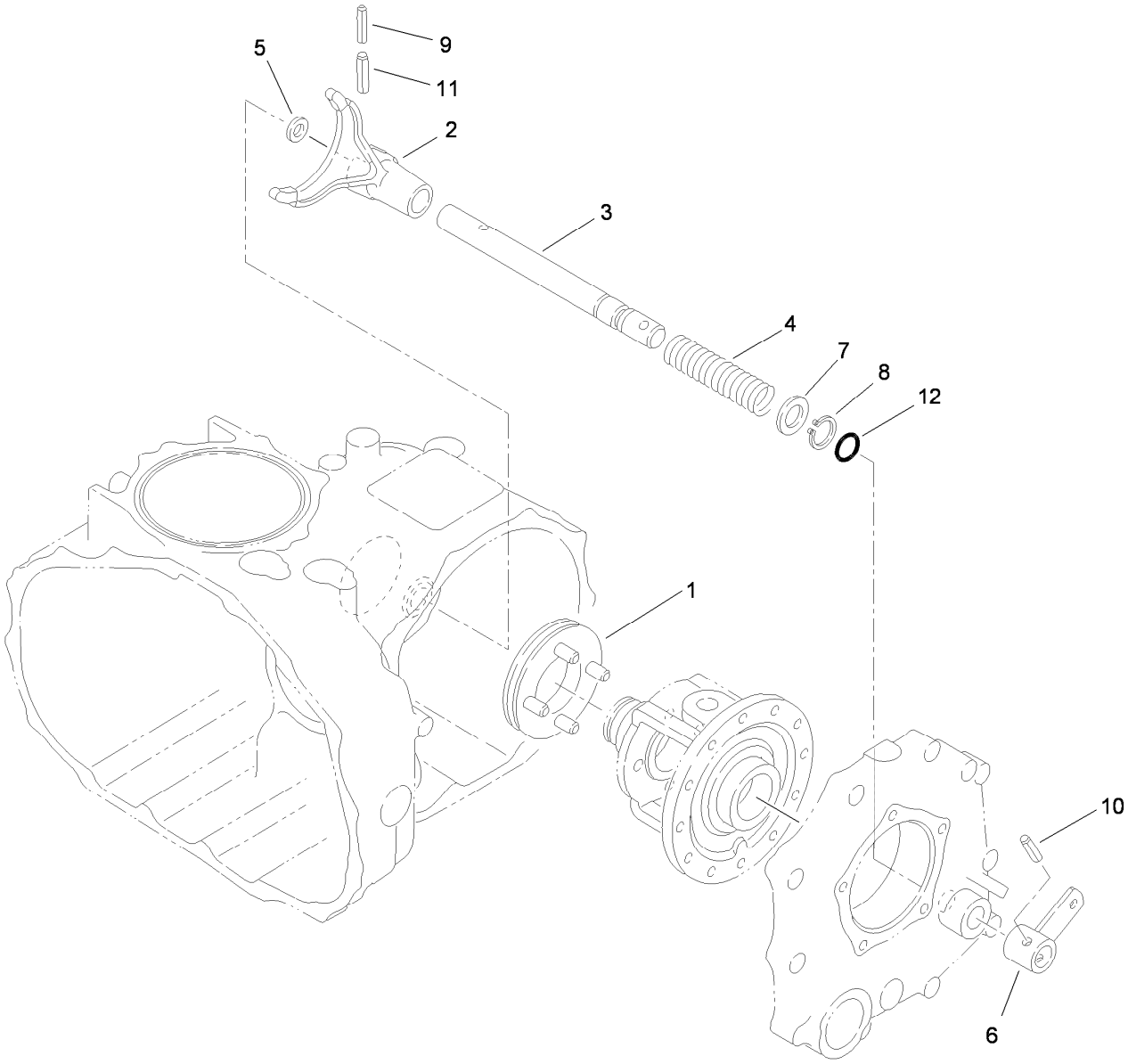

Differential Lock Assembly
4 Wheel Drive Transaxle Assembly No. 115-2175

Ref.	*Part Number*	*Qty.*	*Description*
1	92-0730	1	Slider-Differential, Lock
2	92-0721	1	Fork-Lock, Differential
3	92-0722	1	Shaft-Fork, Lock Differential
4	92-0723	1	Spring-Lock, Differential
5	92-0744	1	Washer
6	92-0724	1	Arm-Lock, Differential
7	92-0733	1	Washer
8	92-0753	1	Ring-Snap
9	92-0768	1	Pin-Roll, Spring
10	92-0770	1	Pin-Roll, Spring
11	92-0771	1	Pin-Roll, Spring
12	92-0787	1	O-Ring

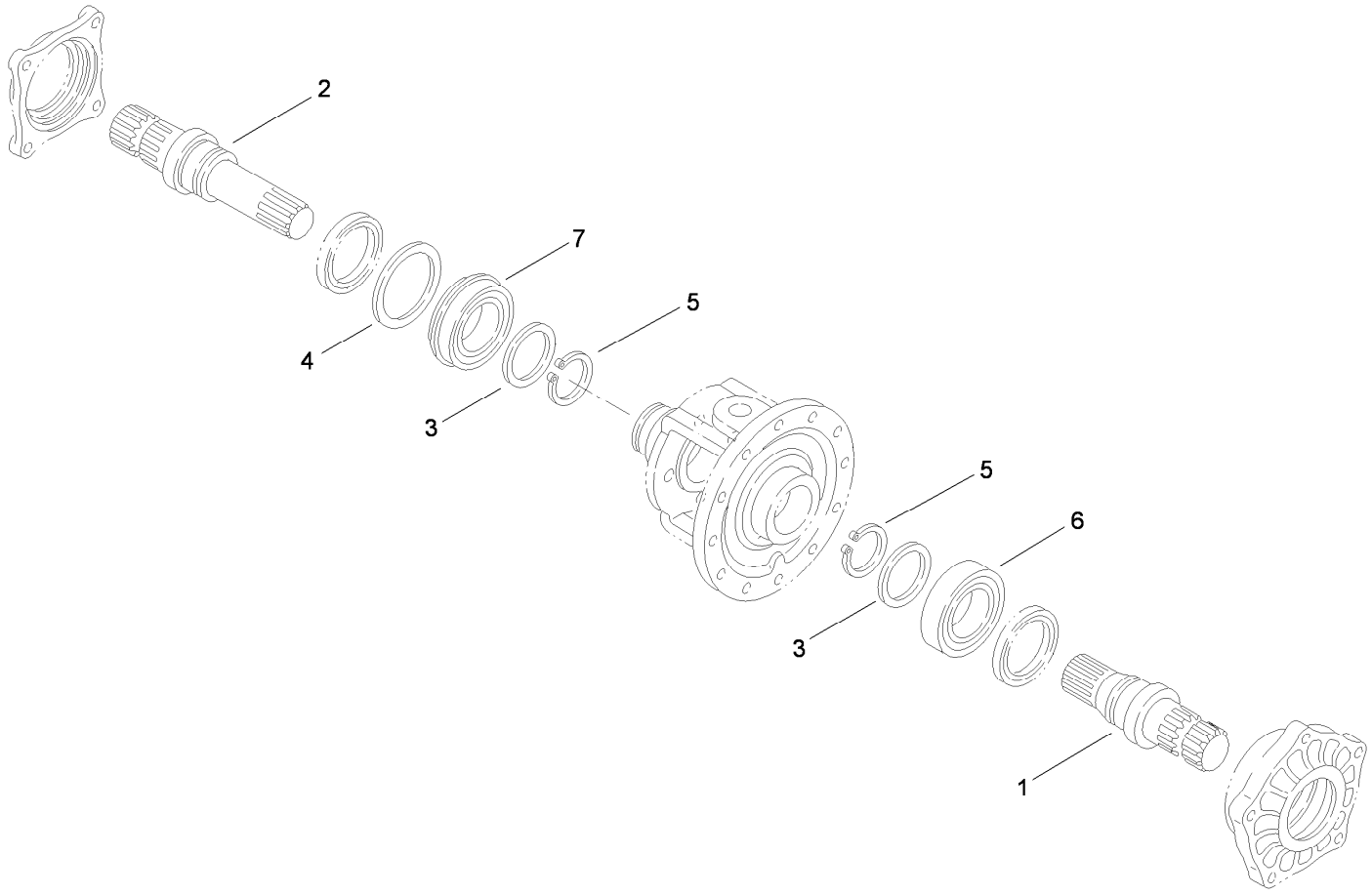

Axle Shaft Assembly
4 Wheel Drive Transaxle Assembly No. 115-2175

Ref.	*Part Number*	*Qty.*	*Description*
1	92-0725	1	Shaft-Axle, Left
2	92-0726	1	Shaft-Axle, Right
3	92-0727	2	Washer
4	92-0728	1	Washer
5	92-0756	2	Ring-Snap
6	92-0775	1	Bearing
7	92-0780	1	Bearing

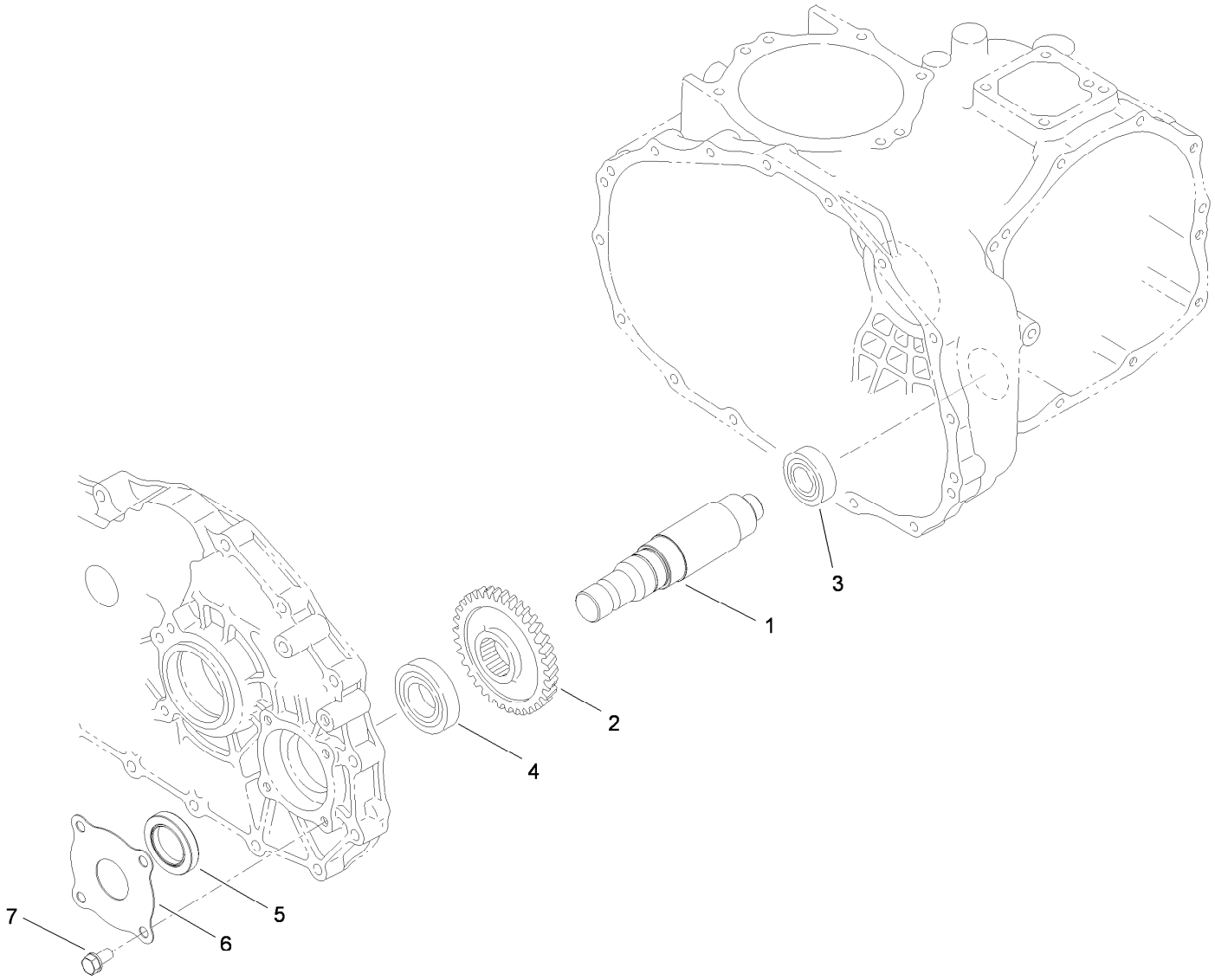

Front Drive Assembly
4 Wheel Drive Transaxle Assembly No. 115-2175

Ref.	*Part Number*	*Qty.*	*Description*
1	115-7828	1	Driveshaft-Front
2	92-5184	1	Gear
3	251-346	1	Bearing-Ball
4	92-5185	1	Bearing
5	115-7829	1	Seal
6	115-7830	1	Protector-Seal
7	33104-016	4	Screw-HHF

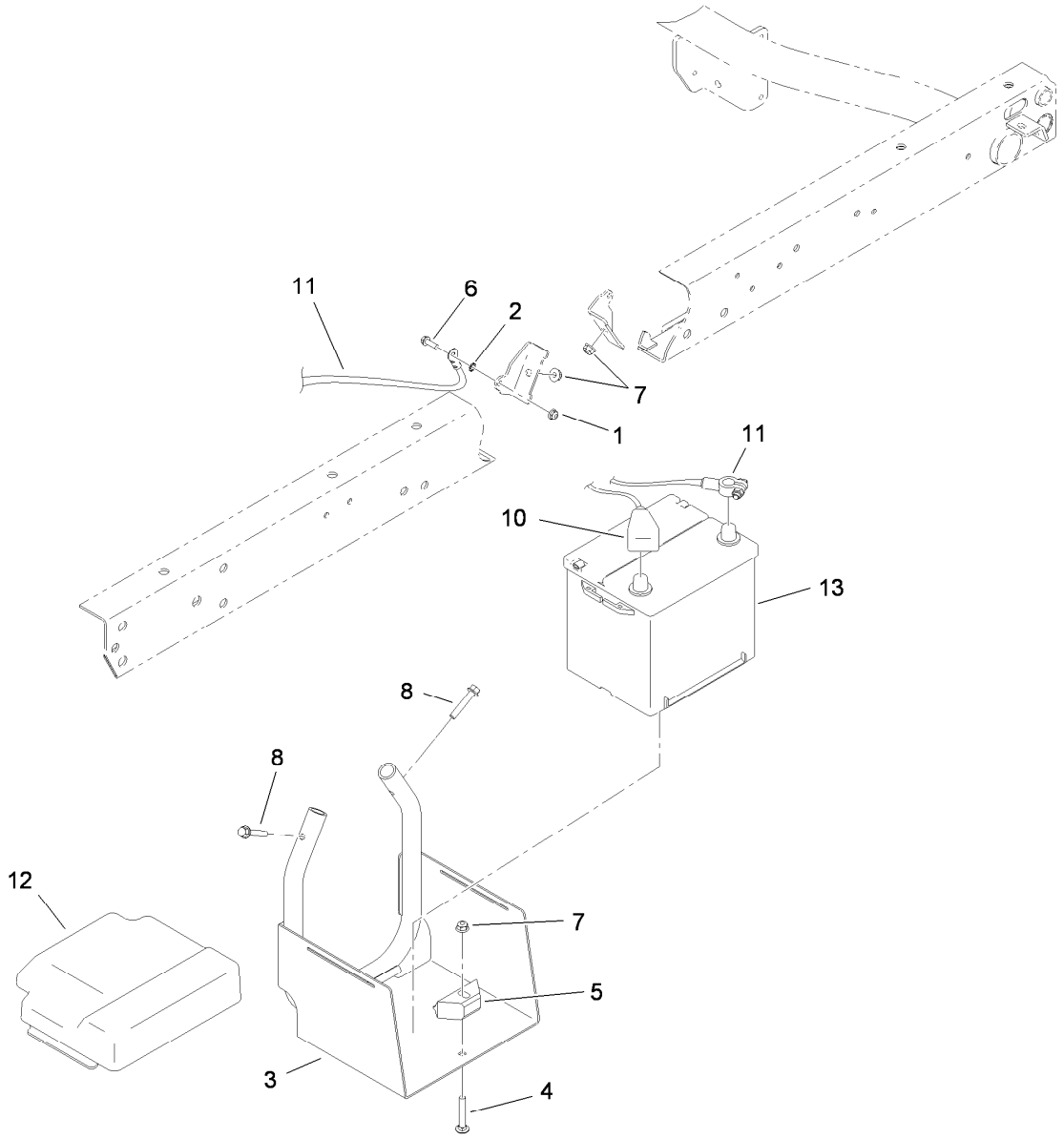

Battery Assembly

Ref.	*Part Number*	*Qty.*	*Description*
1	104-7201	1	Nut-HF
2	3255-8	1	Washer-Lock
3	115-2237-03	1	Tray-Battery
4	3230-6	1	Bolt-CARR
5	66-2490	1	Retainer-Battery
6	32105-15	1	Screw-HWH
7	104-8300	3	Nut-HF, NI
8	94-5780	2	Screw-HWH
10	87-8000	1	Cable-Battery, Positive
11	115-8112	1	Cable-Battery, Negative
12	115-2448	1	Cover-Battery
13	106-5187	1	Battery-Dry

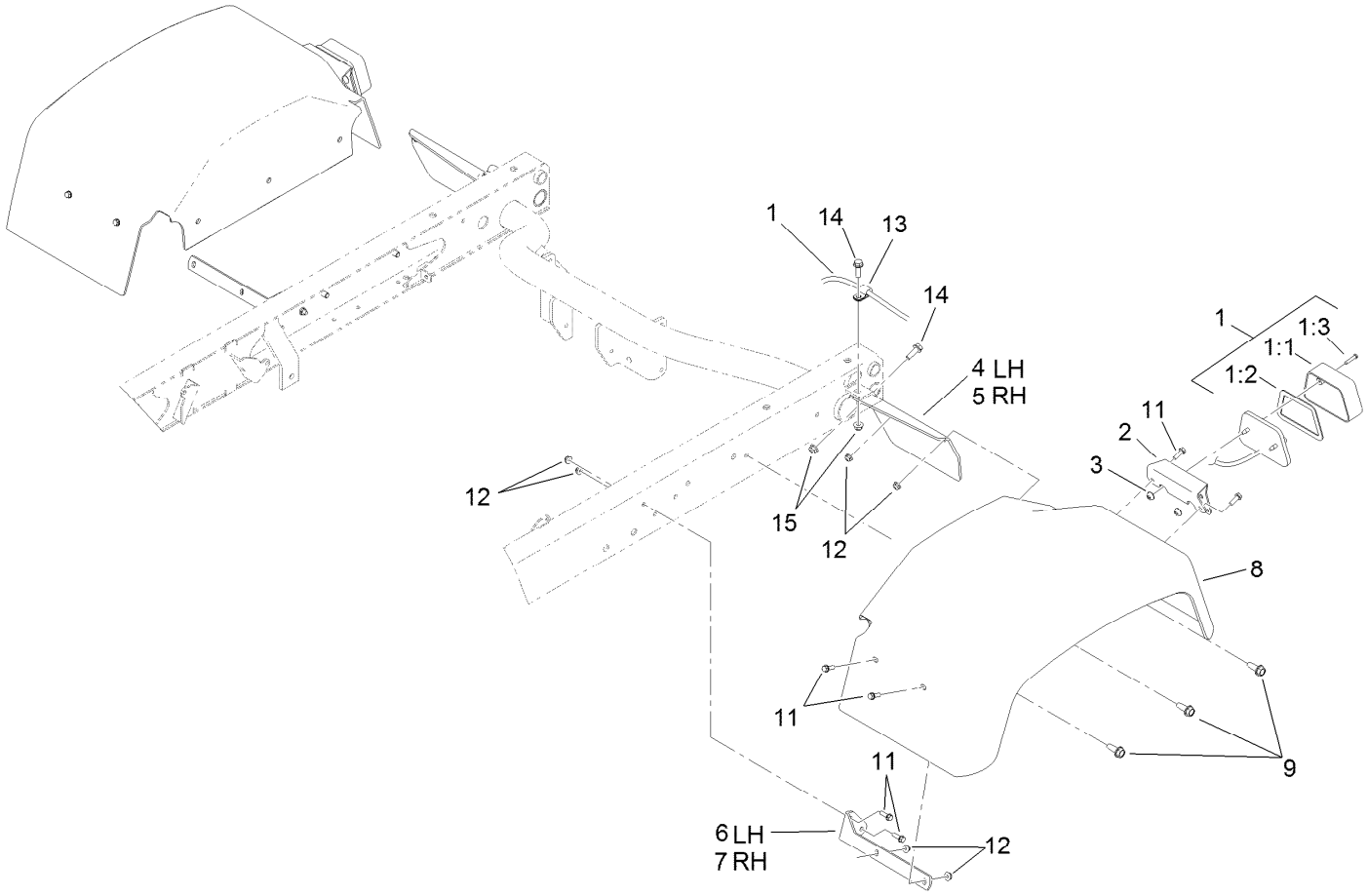

Tail Light and Fender Assembly

Ref.	Part Number	Qty.	Description
1	115-7745	2	Light-Tail, Brake
1:1	87-6300	1	Lens-Light, Tail
1:2	87-6310	1	Gasket-Light, Tail
1:3	32144-93	2	Screw-PPHTF
2	115-2289-03	2	Bracket-Light, Tail
3	3290-506	4	Palnut
4	93-8943-03	1	Bracket-Fender, Rear (LH)
5	93-8944-03	1	Bracket-Fender, Rear (RH)
6	93-8941-03	1	Bracket-Fender, Front (LH)
7	93-8942-03	1	Bracket-Fender, Front (RH)
8	87-6660	2	Fender-Rear
9	105-6245	6	Screw-Tapping
11	32105-15	12	Screw-HWH
12	104-7201	12	Nut-HF
13	2412-93	2	Clamp-R
14	3234-17	4	Screw-HHF
15	104-8300	4	Nut-HF, NI

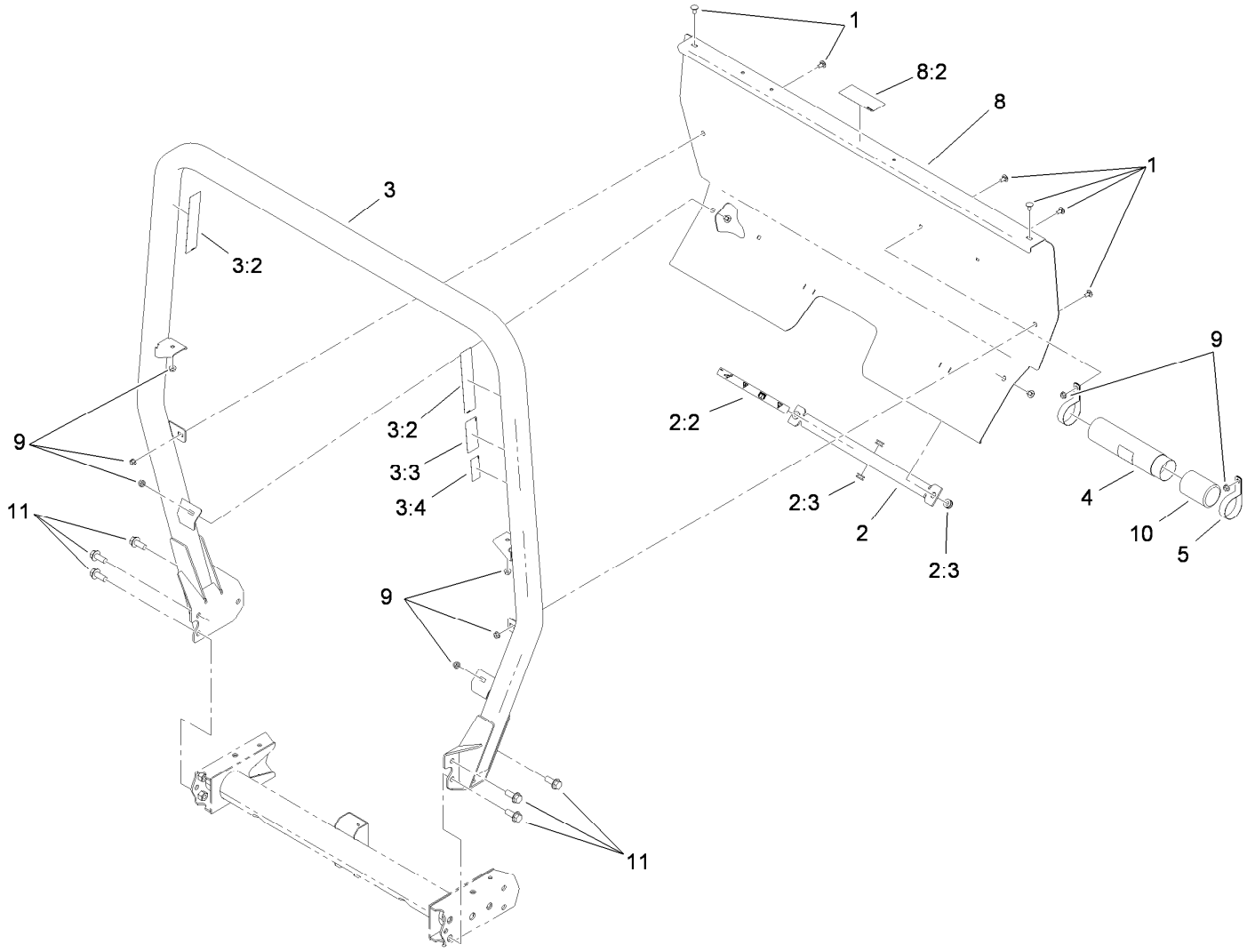

Roll-Over Protection System Assembly

Ref.	*Part Number*	*Qty.*	*Description*
1	3230-18	8	Screw-CARR
2	105-7960	1	Bed Support ASM
2:2	93-9852	1	Decal-Warning
2:3	92-5972	4	Grommet-Rubber
3	115-7910	1	ROPS ASM
3:2	106-7767	2	Decal-ROPS
3:3	93-9850	1	Decal-ROPS, CE
3:4	117-4969	1	Decal-ROPS, ISO
4	104-7050	1	Tube-Manual
5	2412-133	2	Clamp-R
8	115-2213	1	ROPS Cover ASM
8:2	105-4215	1	Decal-Caution
9	32128-20	8	Nut-HF
10	104-7048	1	Cap-Housing
11	3234-38	6	Screw-HHF

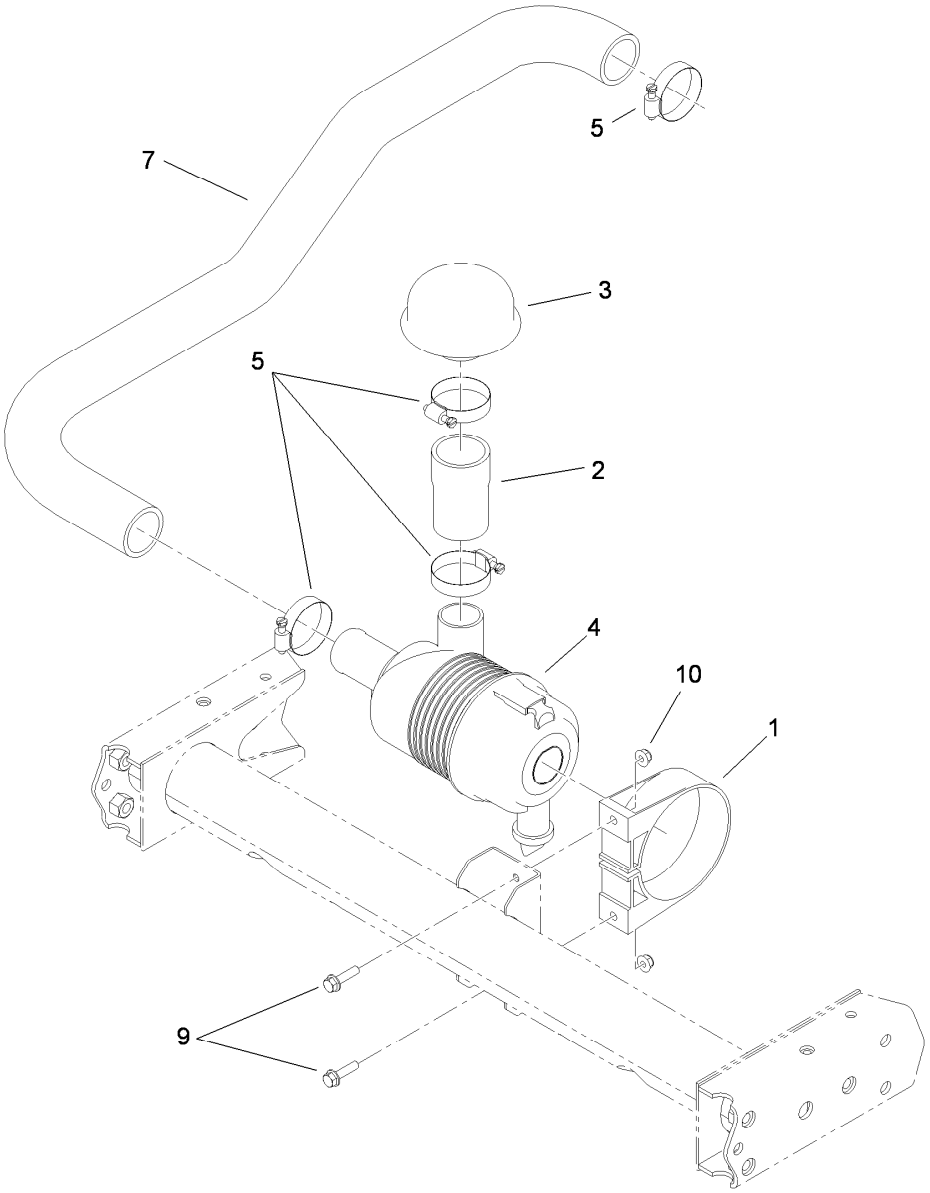

Air Cleaner Assembly

Ref.	*Part Number*	*Qty.*	*Description*
1	95-5806	1	Bracket-Mounting
2	107-7962	1	Hose-Cleaner, Air
3	46-7510	1	Hood-Inlet, Air
4	106-2416	1	Air Cleaner ASM
5	2412-92	4	Clamp-Hose
7	115-7754	1	Hose-Intake, Air
9	3234-36	2	Screw-HHF
10	104-8300	2	Nut-HF, NI

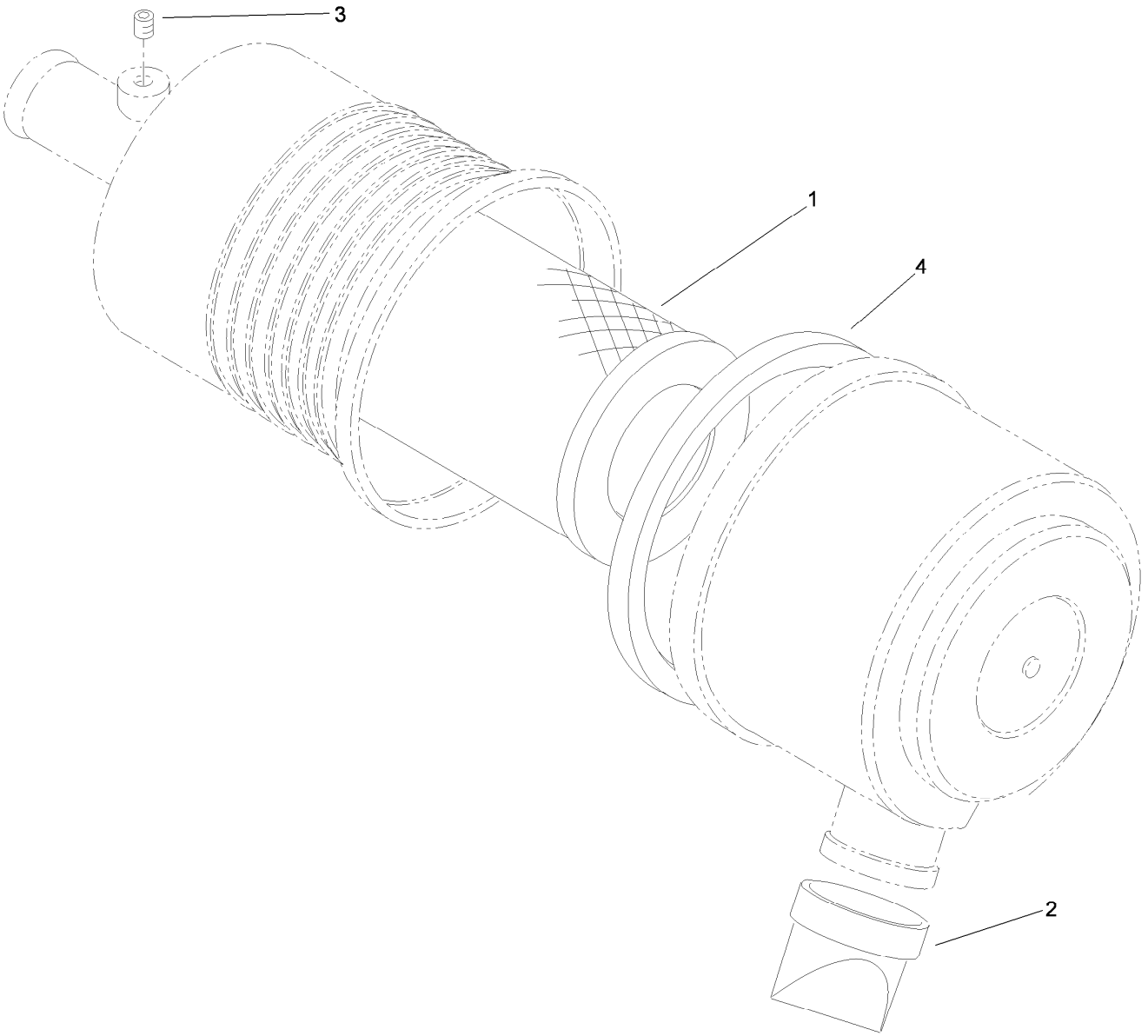

Air Cleaner Assembly No. 106-2416

Ref.	*Part Number*	*Qty.*	*Description*
1	108-3811	1	Filter-Air
2	104-0498	1	Valve-Vacuator
3	285-17	1	Plug-Pipe
4	106-6748	1	Gasket

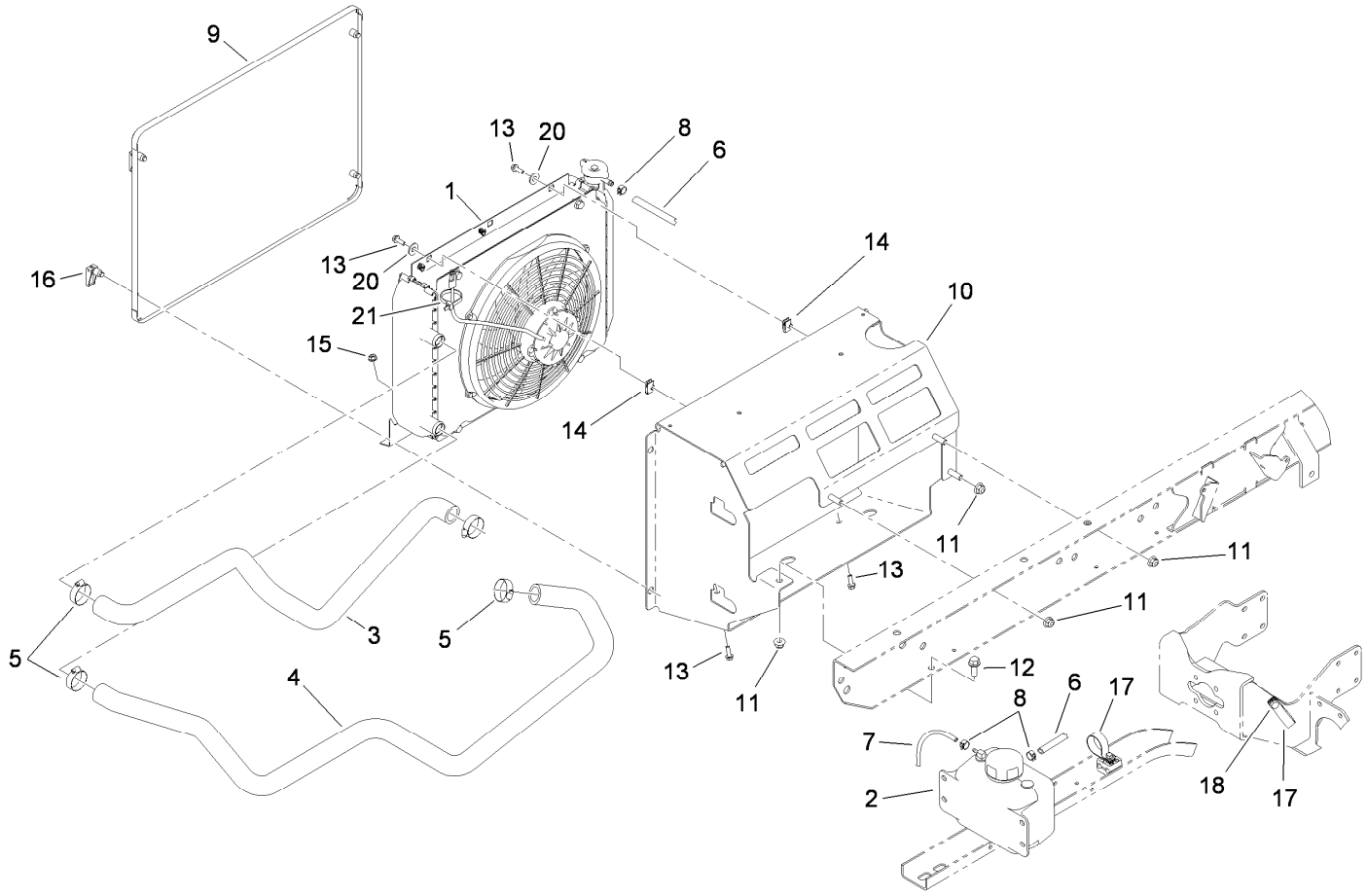

Cooling System Assembly

Ref.	Part Number	Qty.	Description
1		1	Radiator ASM ●
2	87-3710	1	Reservoir-Coolant
3	115-7753	1	Hose-Coolant, Upper
4	115-7752	1	Hose-Coolant, Lower
5	2412-34	4	Clamp-Hose
6	110-4114	1	Hose-Fuel
7	110-4104	1	Hose-Fuel
8	92-2379	3	Clamp-Hose
9	115-2428-03	1	Screen-Radiator
10	115-2434	1	Mount-Radiator

Ref.	Part Number	Qty.	Description
11	104-8301	4	Nut-HF, NI
12	3234-11	1	Screw-HHF
13	3234-4	4	Screw-HHF
14	107069	2	Clip
15	32128-33	2	Nut-HF
16	74-5950	4	Latch-Swell
17	2412-74	2	R-Clamp
18	32144-11	1	Screw-Thd Roll, HWH
20	3256-3	2	Washer-Flat
21	3290-379	1	Tie-Cable

● Not serviced separately

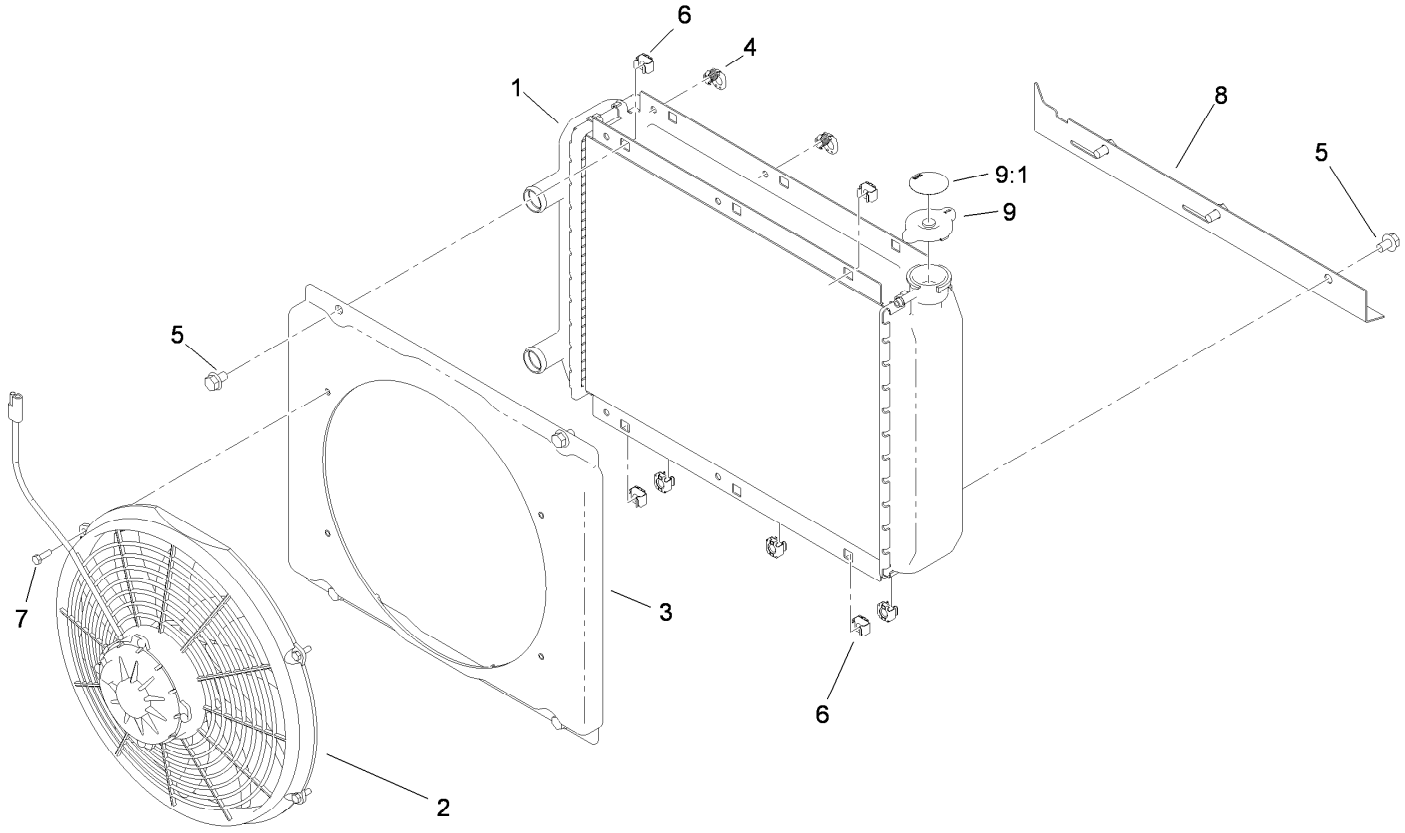

Radiator Assembly

Ref.	*Part Number*	*Qty.*	*Description*
1	114-8384	1	Radiator
2	114-8385	1	Fan-Electric
3	114-8386	1	Shroud
4	114-8387	2	Latch-Spring
5	3234-30	7	Screw-HHF
6	703856	7	Nut-Sq, Caged
7	60-6910	4	Screw-HH
8	115-7765	1	Plate-Mount, Lower
9	115-7766	1	Cap-Radiator
9:1	106-6755	1	Decal-Cap, Radiator

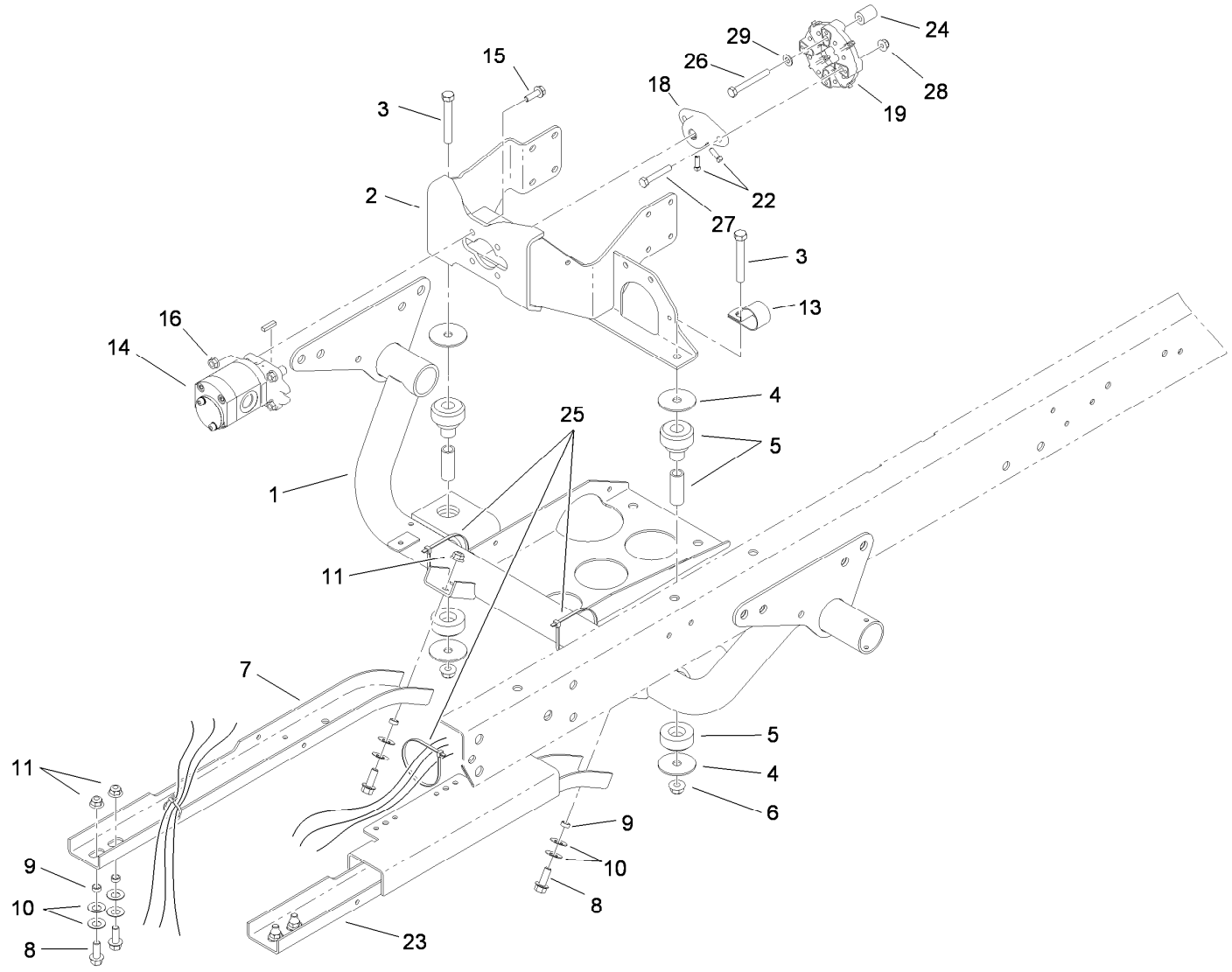

Engine Support Assembly

Ref.	Part Number	Qty.	Description
1	115-2256-03	1	Support-Engine
2	114-8443-03	1	Mount-Pump/Engine
3	324-13	2	Screw-HH
4	87-5100	4	Washer-Snubbing
5	106-7865	2	Mount-Engine
6	114-8417	2	Nut-HF, NI
7	87-4730-03	1	Guard-Belly
8	3234-11	6	Screw-HHF
9	76-9100	6	Spacer
10	3290-413	12	Washer-Belleville
11	104-8301	6	Nut-HF, NI
13	2412-82	1	Clamp-R
14	114-8302	1	HYD Pump ASM

Ref.	Part Number	Qty.	Description
15	3234-17	4	Screw-HHF
16	32128-20	4	Nut-HF
18	115-2169	1	Hub-Pump
19	119-0652	1	Coupler-Rubber
22	3241-6	2	Screw-SQH
23	115-2215-03	1	Guard-LH
24	119-0718	2	Spacer
25	3290-379	4	Tie-Cable
26	33114-070	2	Screw-HH
27	322-10	2	Screw-HH
28	104-8300	2	Nut-HF, NI
29	3256-23	2	Washer-Plain

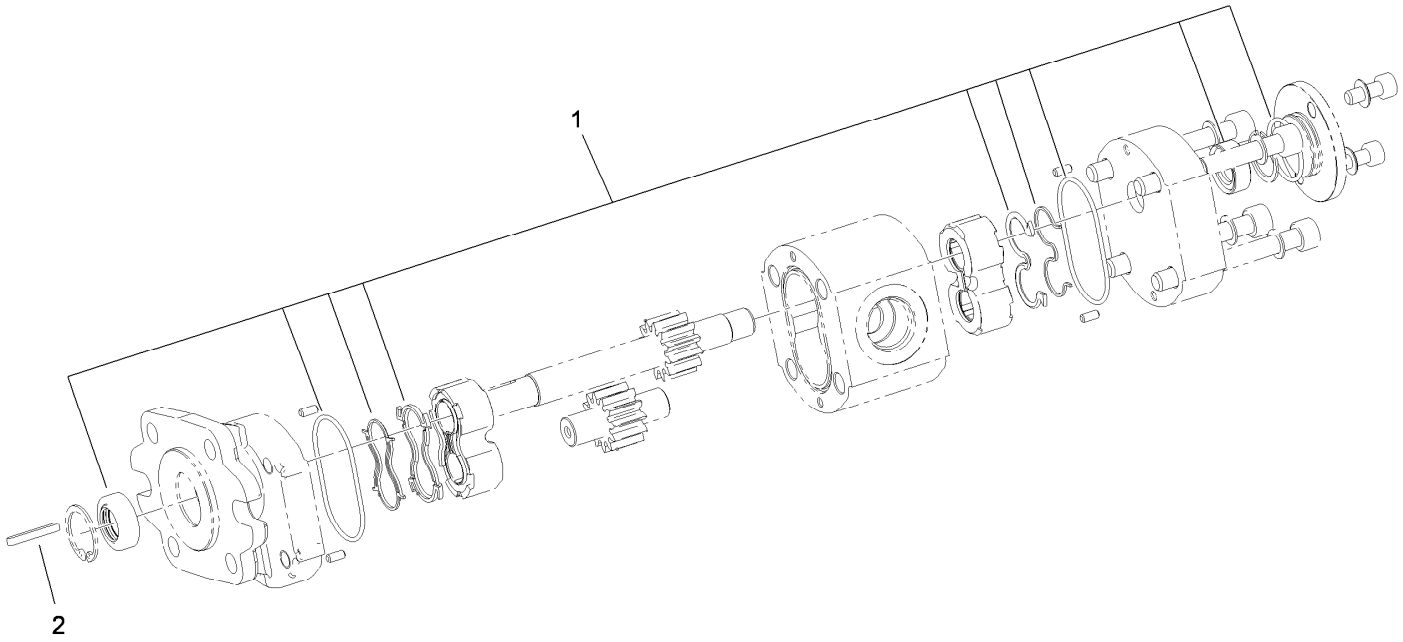

Hydraulic Gear Pump Assembly No. 114-8302

Ref.	*Part Number*	*Qty.*	*Description*
1	115-8696	1	Seal Kit
2	115-7855	1	Key-Square

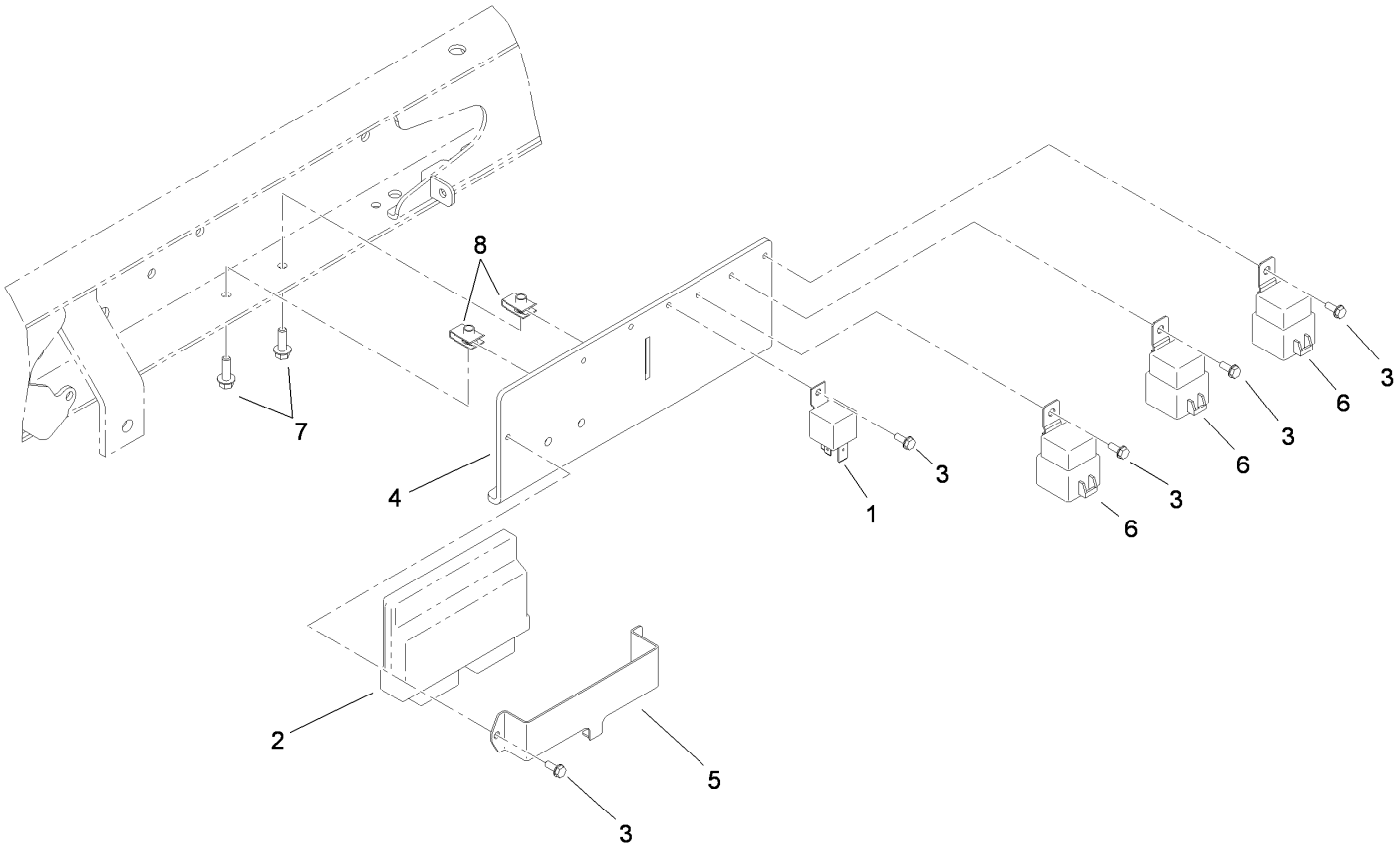

ECM and Relay Assembly

Ref.	*Part Number*	*Qty.*	*Description*
1	99-7435	1	Relay
2	114-8371	1	Module-Injection, Fuel
3	32144-112	5	Screw-HWH
4	115-2225	1	Bracket-Relay
5	115-2227	1	Holder-ECM
6	99-7430	3	Relay-Mini
7	3234-4	2	Screw-HHF
8	107069	2	Clip

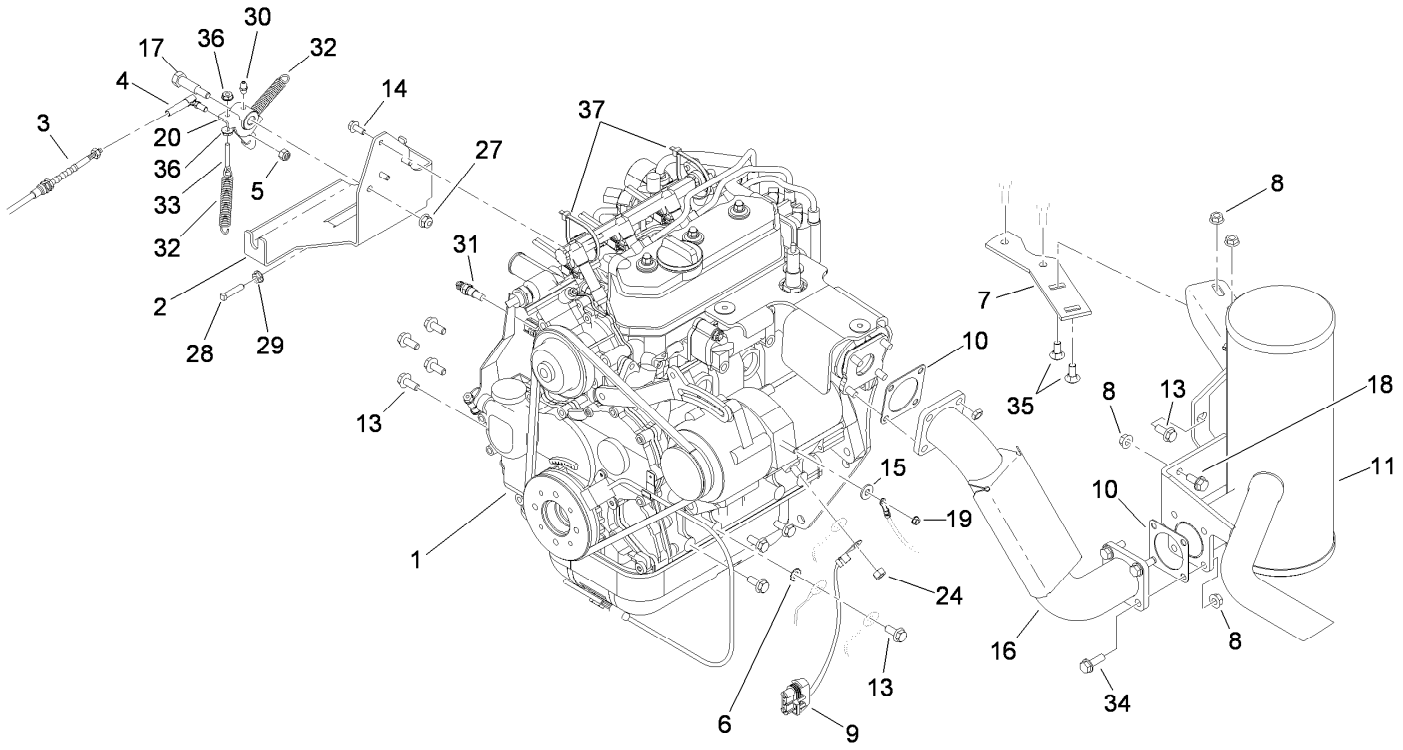

Engine Assembly

Ref.	Part Number	Qty.	Description
1	120-4870	1	Engine ASM
2	115-2447-03	1	Bracket-Throttle
3	115-2285	1	Cable-Accelerator
4	18-1720	1	Ball Joint
5	3296-3	1	Nut-Lock
6	3255-8	1	Washer-Lock
7	105-9472	1	Plate-Mount, Muffler
8	32128-20	8	Nut-HF
9	99-3441	1	Harness-Wire, Fusible Link
10	105-4209	2	Gasket-Muffler
11	115-7725	1	Muffler
13	98-7977	9	Screw-HHF
14	114-8414	3	Screw-HHF
15	3256-2	1	Washer-Flat
16	115-2179	1	Exhaust Tube ASM
17	7-0030	1	Screw-Shoulder, HH

Ref.	Part Number	Qty.	Description
18	3234-5	2	Screw-HHF
19	33003-00	1	Nut-HF
20	115-7770	1	Bellcrank ASM
24	33014-00	1	Nut-Hex
27	104-8300	1	Nut-HF, NI
28	107-7447	1	Screw-Set, SQH
29	32128-14	1	Nut-HF
30	302-5	1	Fitting-Grease
31	94-7621	1	Sender-Temperature
32	115-7769	2	Spring-Extension
33	108-6932	1	Rod-Link, Governor
34	3234-17	4	Screw-HHF
35	3230-1	2	Bolt-CARR
36	32149-8	2	Nut-Keps
37	3290-379	2	Tie-Cable

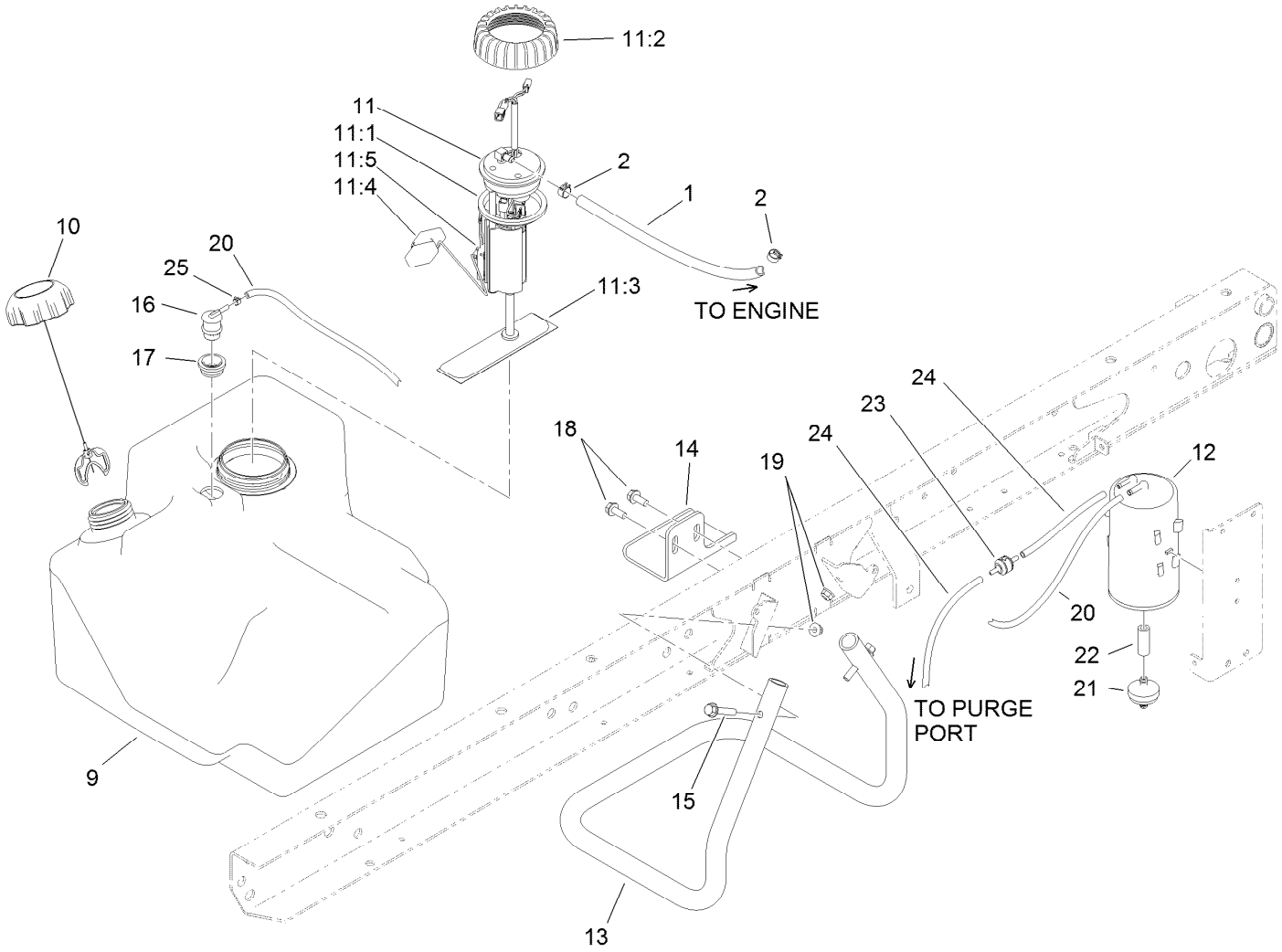

Fuel System Assembly

Ref.	Part Number	Qty.	Description
1	109-0279	1	Hose-Fuel
2	92-2379	2	Clamp-Hose
9	115-7700	1	Tank-Fuel
10	115-7788	1	Cap-Fuel
11	115-2399	1	Pump-Fuel
11:1	115-2163	1	Gasket-Pump, Fuel
11:2	115-2162	1	Cap-Pump, Fuel
11:3	115-7818	1	Fuel Filter ASM
11:4	120-4812	1	Float
11:5	127-8691	1	Sender-Fuel Level
12	115-2251	1	Canister-Carbon
13	115-7767-03	1	Tube-Support

Ref.	Part Number	Qty.	Description
14	114-8404	1	Plate-Retainer
15	94-5780	2	Screw-HWH
16	114-0285	1	Valve-Rollover
17	114-0284	1	Grommet
18	32144-11	2	Screw-Thd Roll, HWH
19	104-8300	2	Nut-HF, NI
20	110-3254	1	Hose-Fuel
21	115-7854	1	Filter-Fuel, Inline
22	106-5317	1	Hose-Fuel
23	115-7868	1	Valve-Check, Vacuum
24	115-7871	2	Hose-Fuel
25	2412-146	1	Clamp-Hose

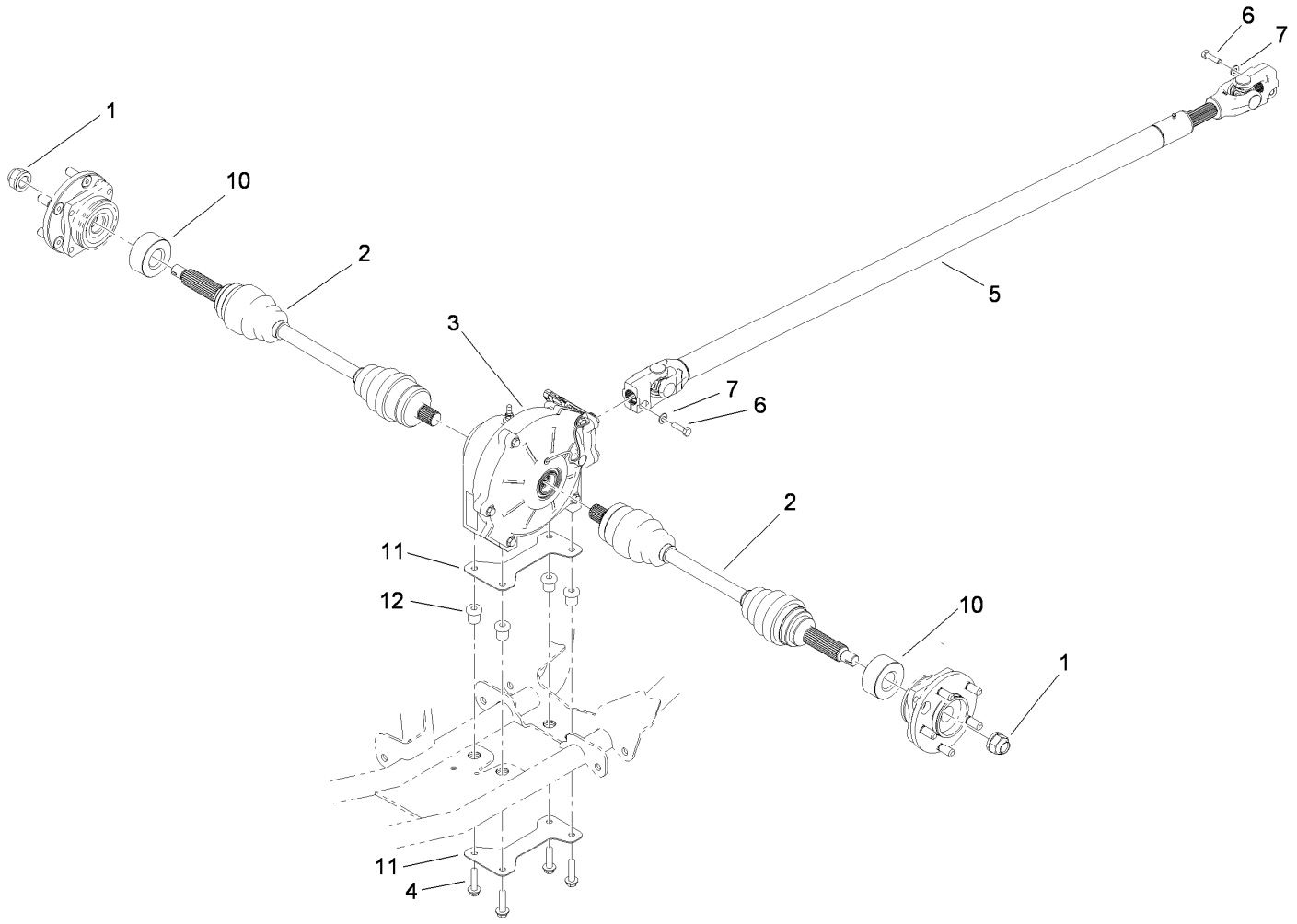

4 Wheel Drive Assembly

Ref.	*Part Number*	*Qty.*	*Description*
1	115-2164	2	Nut-Spindle
2	115-2172	2	Cv Axle ASM
3	119-0824	1	Differential ASM
4	3234-18	4	Screw-HHF
5	115-2171	1	Driveshaft ASM
6	3210-6	2	Screw-HH
7	3256-23	2	Washer-Plain
10	115-2254	2	Spacer-Axle
11	119-9477-03	2	Plate-Differential
12	63-9750	4	Mount

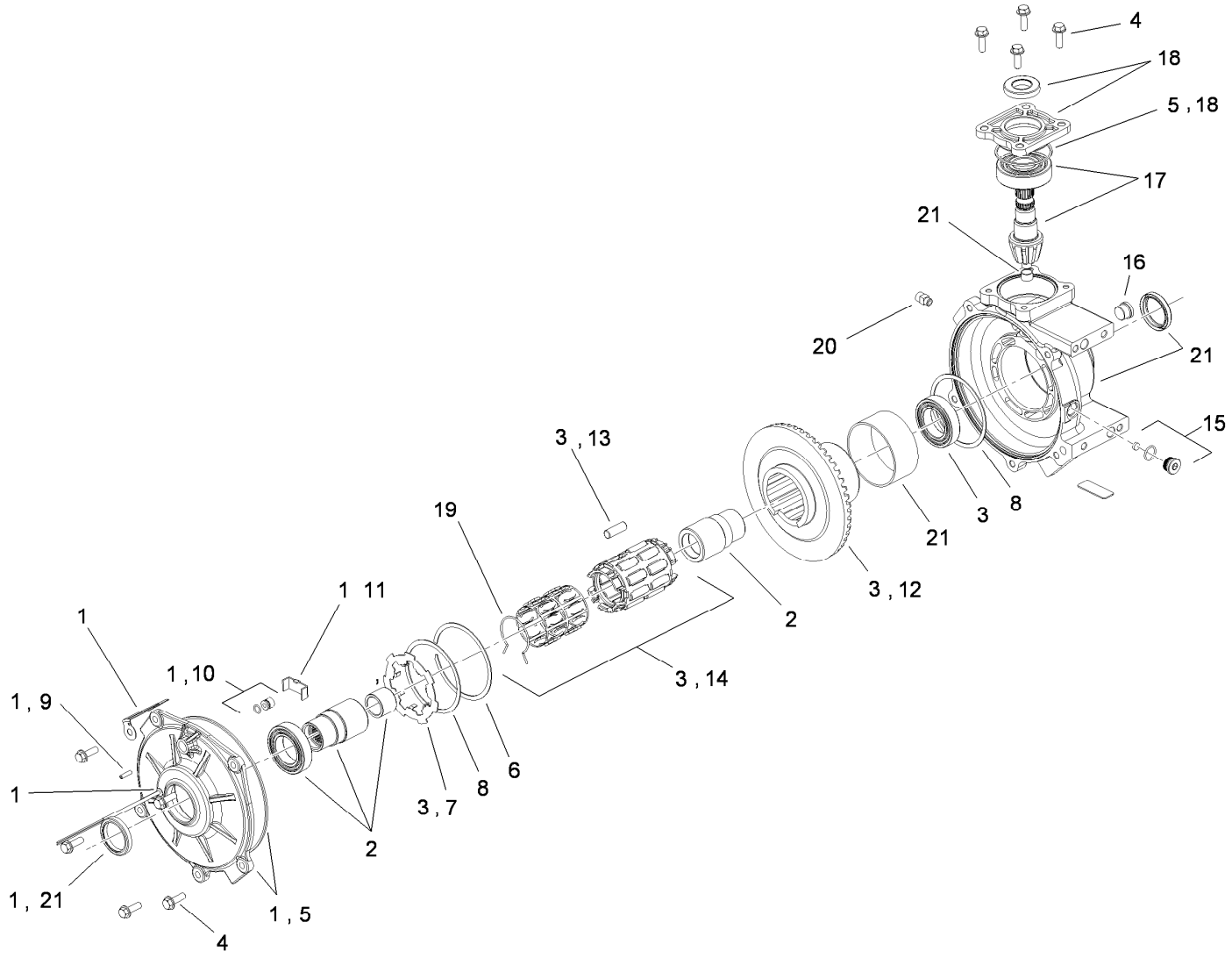

Differential Assembly No. 119-0824

Ref.	*Part Number*	*Qty.*	*Description*
1	115-7790	1	Output Cover ASM
2	119-9479	1	Output Hub ASM
3	115-7792	1	Clutch ASM
4	115-7793	1	Bolt Kit
5	115-7794	1	Seal Kit
6	115-7795	1	Ring-Retaining, Internal
7	115-7796	1	Plate-Armature, Notched
8	115-7797	1	Shim
9	115-7798	1	Screw-Set
10	115-7799	1	Thrust Button ASM
11	115-7800	1	Plate-Thrust

Ref.	*Part Number*	*Qty.*	*Description*
12	115-7801	1	Gear-Ring, 50T
13	115-7802	1	Roll Kit
14	115-7803	1	Roll Cage ASM
15	115-7804	1	Drain Plug ASM
16	115-7805	1	Plug-Oil, Fill
17	115-7806	1	Shaft-Pinion, 9T
18	115-7807	1	Input Cover ASM
19	115-7808	1	Spring-Torsion
20	117-4985	1	Vent-Protected
21	119-9480	1	Gearcase ASM

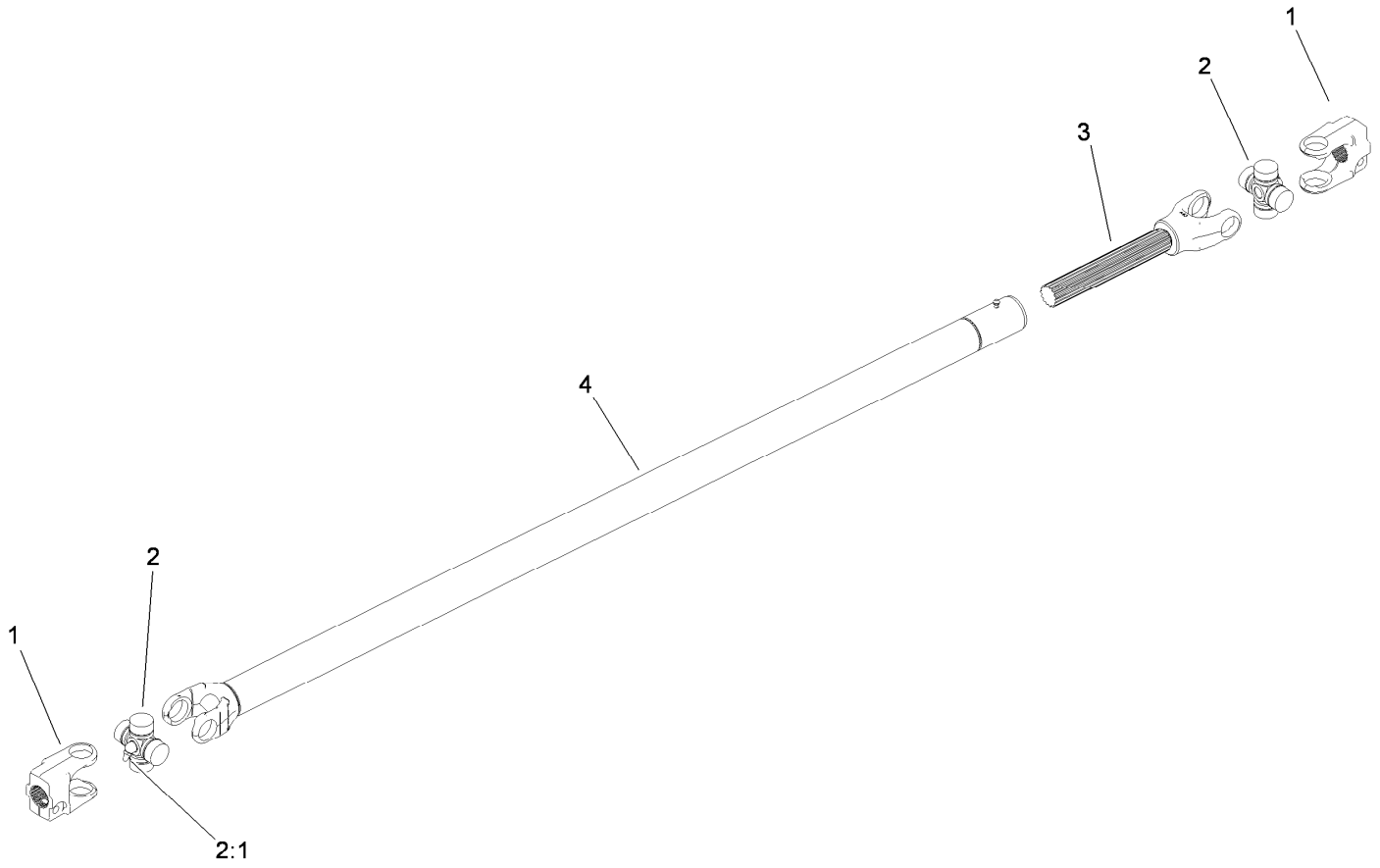

Drive Shaft Assembly No. 115-2171

Ref.	*Part Number*	*Qty.*	*Description*
1	115-7707	2	Yoke
2	54-9180	2	U-Joint Kit
2:1	62-3820	1	Fitting-Grease
3	115-7708	1	Yoke And Shaft
4	115-7709	1	Yoke, Tube And Slip Sleeve ASM

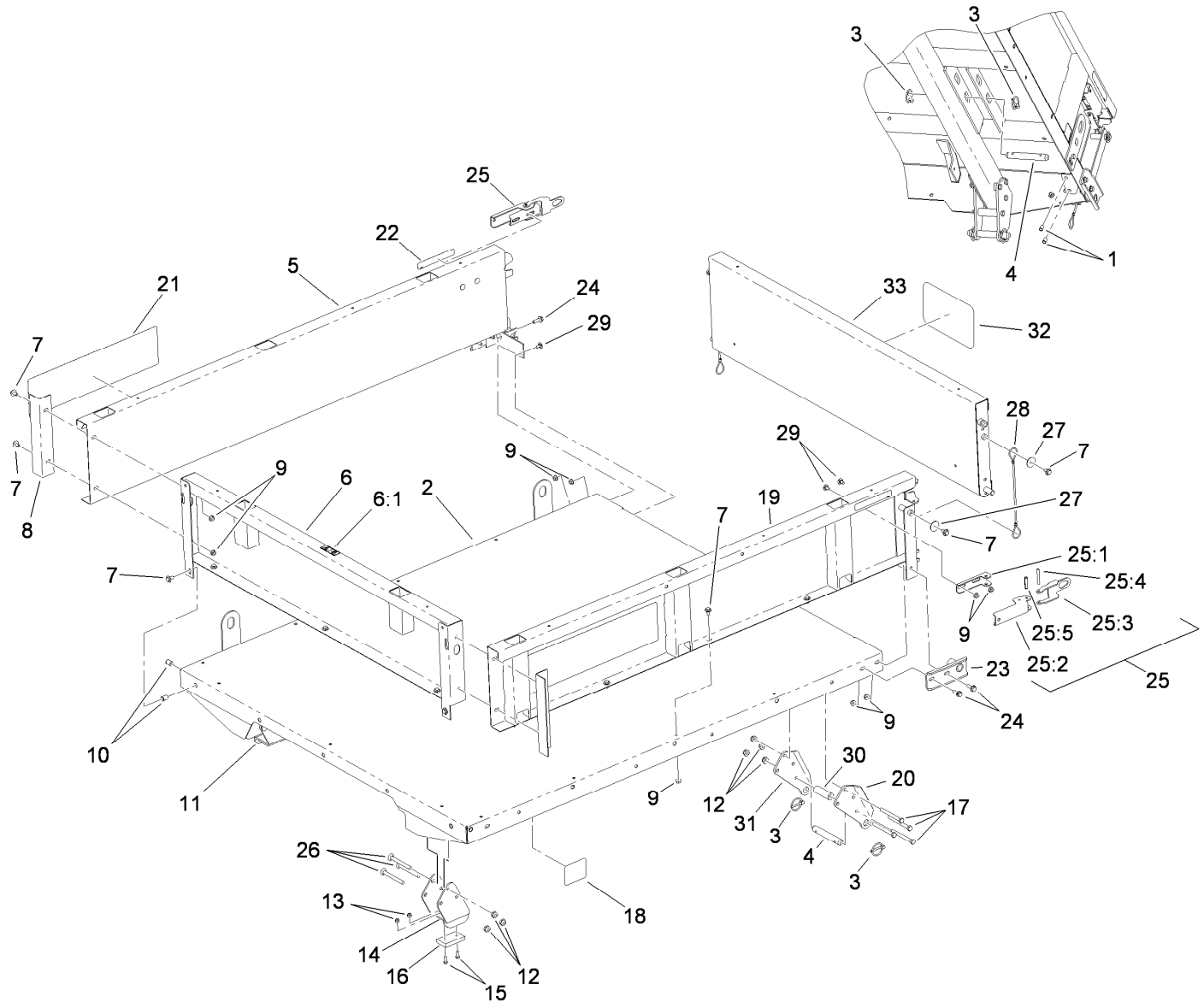

Full Bed and Side Panel Assembly

Ref.	Part Number	Qty.	Description
1	32148-6	4	Nut-Clinch
2	93-9724-03	1	Flatbed-Full
3	92-1298	8	Pin-Lynch
4	92-1233	4	Pin-Clevis
5	92-1255-03	1	Panel-Side, RH
6	92-5982	1	Front Panel ASM
6:1	115-7739	1	Decal-No Riders
7	3234-7	21	Screw-HHF
8	92-1320-03	2	Angle-Side
9	32128-20	27	Nut-HF
10	32148-7	4	Nut-Clinch
11	106-2423-03	1	Bracket-Spacer, RH
12	3296-44	14	Nut-Lock, NI
13	3296-42	4	Nut-Lock, NI
14	106-2422-03	1	Bracket-Spacer, LH
15	3250-45	4	Screw-SPH
16	93-9719	2	Block-Wear
17	323-42	8	Screw-HH
18	93-9899	2	Decal-Warning
19	92-1248-03	1	Panel-Side, LH

Ref.	Part Number	Qty.	Description
20	93-9720-03	2	Bracket-Pivot, Long (LH)
21	115-7916	2	Decal
22	93-9868	2	Decal-Caution
23	92-1265-03	2	Bracket-Pivot
24	3234-29	6	Screw-HHF
25	99-1123	2	Latch ASM
25:1	92-1271	1	Pivot-Latch
25:2	99-1113	1	Handle-Latch
25:3	99-1112	1	Plate-Retainer
25:4	32121-78	1	Pin-Roll
25:5	32121-25	1	Pin-Roll
26	3231-24	6	Screw-CARR
27	3256-57	4	Washer-Flat
28	93-9595	2	Lanyard
29	3230-18	6	Screw-CARR
30	93-9575	2	Tube-Pivot, Flatbed
31	93-9721-03	2	Bracket-Pivot, Long (RH)
32	105-4222	1	Decal
33	92-1259-03	1	Tailgate-Rear

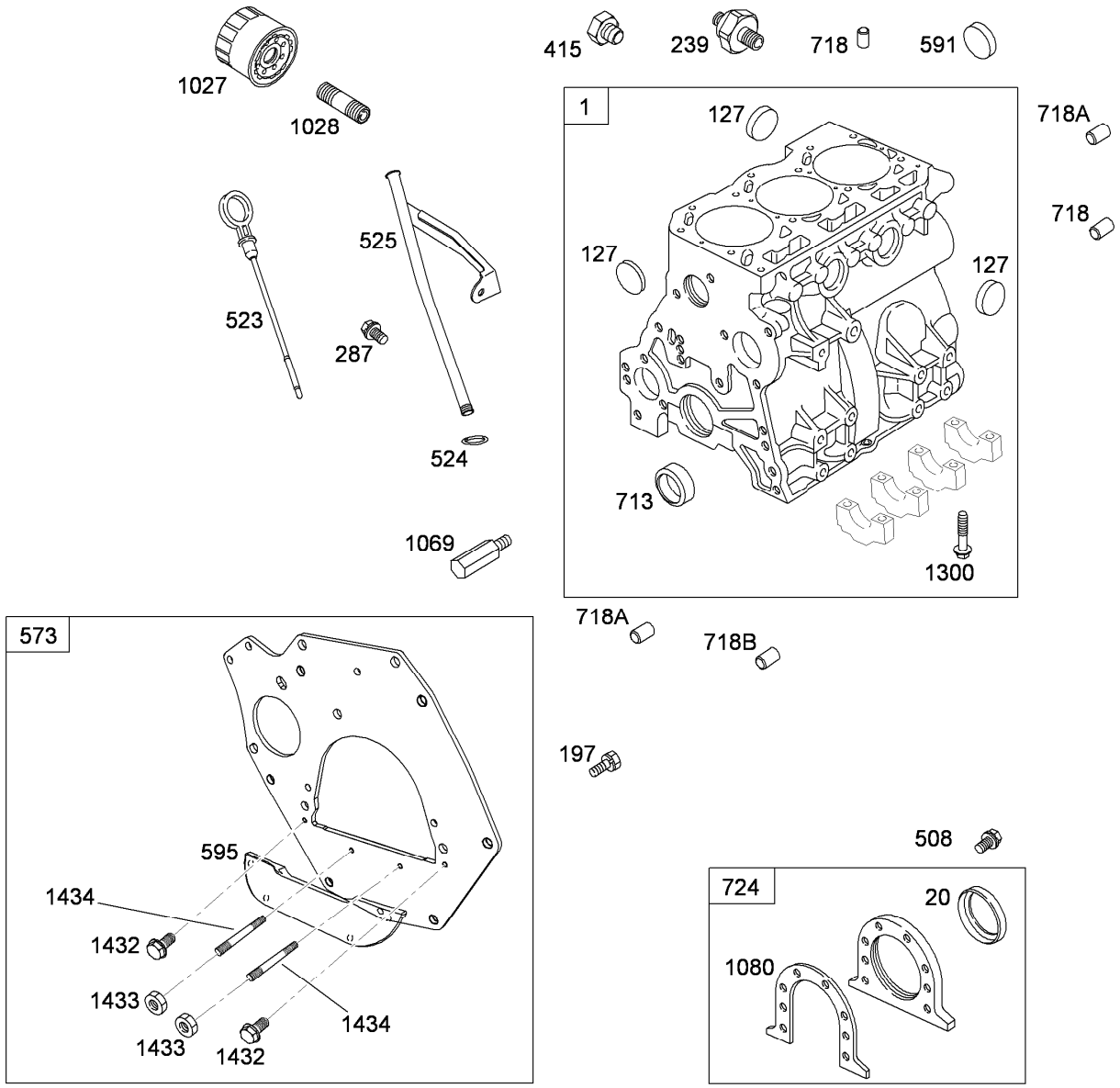

Cylinder Assembly

Ref.	Part Number	Qty.	Description
1	107-9891	1	Cylinder ASM
20	117-4887	1	Seal-Oil
127	99-9008	1	Plug-Welch
197	99-9005	1	Screw-Hex
239	107-9908	1	Switch-Pressure, Oil
287	99-9256	1	Screw-Hex
415	99-9010	1	Plug-Welch
508	99-9004	1	Screw-Hex
523	99-9259	1	Dipstick
524	99-9265	1	Seal-O-Ring
525	99-9260	1	Tube-Dipstick
573	120-7566	1	Backing Plate ASM
591	107-9892	1	Plug-Welch (Cam)
595	115-2309	1	Plate-Shield, End

Ref.	Part Number	Qty.	Description
713	99-9002	1	Bushing
718	99-9012	1	Pin-Locating
718A	99-9013	1	Pin-Locating
718B	99-9014	1	Pin-Locating
724	99-9022	1	Retainer-Seal
1027	83-1760	1	Filter-Oil
1028	105-9337	1	Adapter-Filter, Oil
1069	99-9020	1	Nozzle-Oil
1080	99-9021	1	Gasket-Retainer
1300	99-9006	1	Screw-Hex
1432	115-2307	1	Screw
1433	99-9114	1	Nut-Hex, Metric
1434	115-2306	1	Stud

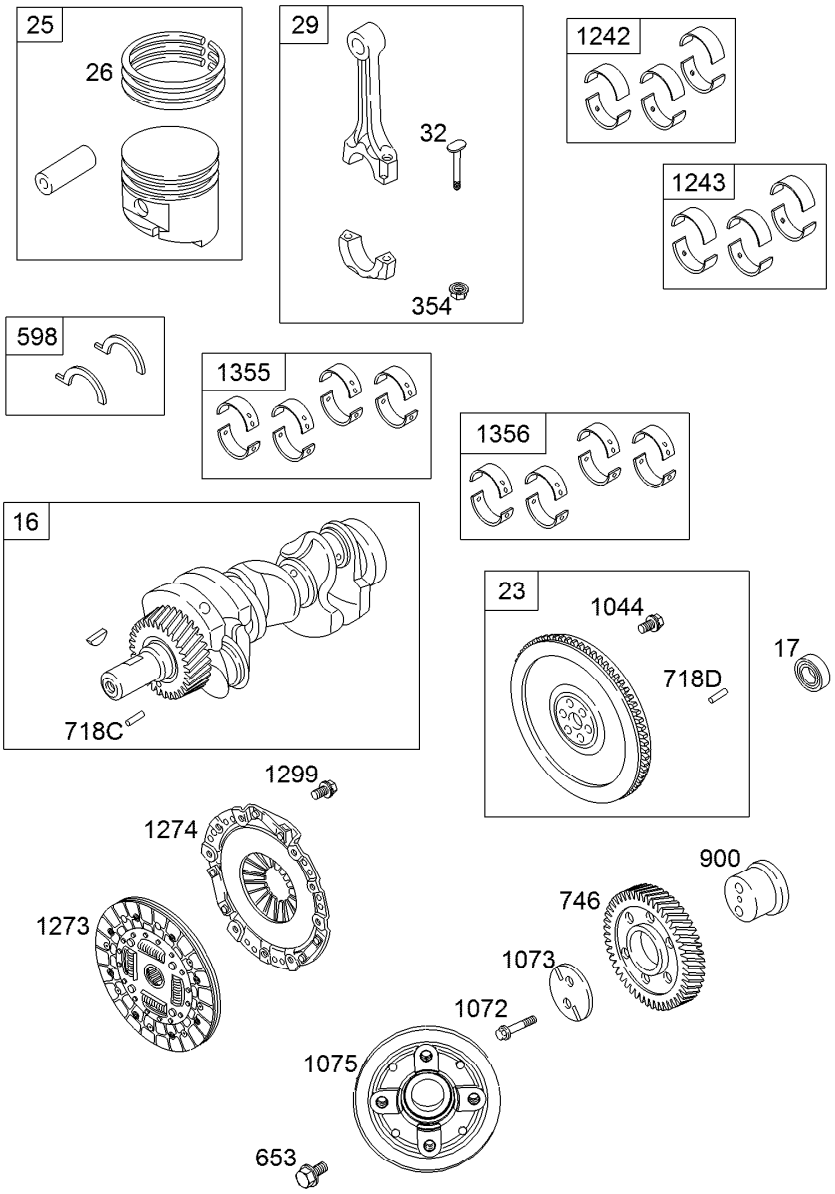

Crankshaft Assembly

Ref.	Part Number	Qty.	Description
16	105-9339	1	Crankshaft
17	105-9324	1	Bearing-Ball, Radial
23	105-9323	1	Flywheel ASM
25	117-4889	1	Piston ASM (STD)
25	117-4890	1	Piston ASM (010)
26	99-9027	1	Ring Set (Standard)
26	99-9028	1	Ring Set (.010 Oversized)
29	119-2162	1	Rod-Connecting
32	99-9030	1	Screw (Connecting Rod)
354	99-9034	1	Nut-Hex (Connecting Rod)
598	99-9035	1	Shim-Endplay (Crankshaft) (Standard)
598	99-9036	1	Shim-Endplay (.010 Oversized)
653	107-9897	1	Screw-Hex (Crankshaft Pulley)
718C	99-9037	1	Pin-Locating

Ref.	Part Number	Qty.	Description
718D	106-1852	1	Pin-Locating
746	99-9609	1	Gear-Drive
900	99-9039	1	Shaft-Gear
1044	99-9031	1	Screw-Hex (Flywheel)
1072	99-9032	1	Screw-Hex (Idle Gear Plate)
1073	99-9040	1	Plate-Gear, Idler
1075	117-4892	1	Pulley-Crankshaft
1242	117-4893	1	Rod Bearing Set (STD)
1243	99-9044	1	Rod Bearing Set (.010 Undersized)
1273	104-9219	1	Disc-Clutch
1274	104-9231	1	Plate-Pressure, Clutch
1299	99-9054	1	Screw-Hex (Pressure Plate Clutch)
1355	117-4894	1	Main Bearing Set (STD)
1356	99-9046	1	Main Bearing Set (.010 Undersized)

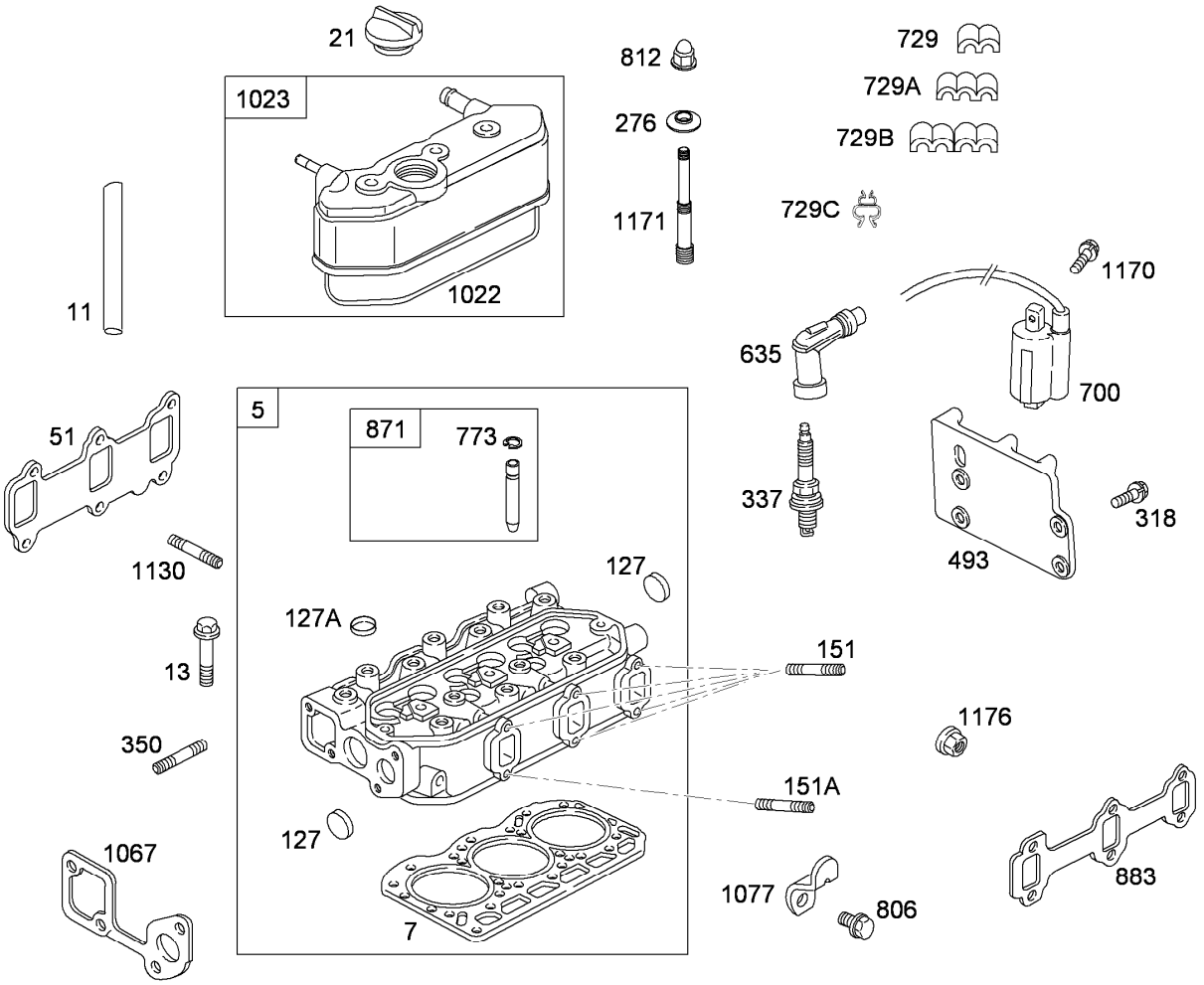

Cylinder Head Assembly

Ref.	Part Number	Qty.	Description
5	117-4895	1	Head-Cylinder
7	99-9254	1	Gasket-Head, Cylinder
11	105-9322	1	Hose-Breather
13	99-9614	1	Screw-Metric
21	99-9052	1	Cap-Fill, Oil
51	99-9173	1	Gasket-Intake
127	99-9008	1	Plug-Welch
127A	99-9060	1	Plug-Welch
151	99-9058	1	Stud-Metric
151A	99-9059	1	Stud-Metric
276	99-9063	1	Washer-Seal
318	99-9270	1	Screw-Hex
337	117-4897	1	Sparkplug
350	99-9057	1	Stud-Metric
493	99-9065	1	Bracket-Mounting
635	117-4899	1	Boot-Spark Plug
700	117-4900	1	Coil-Ignition

Ref.	Part Number	Qty.	Description
729	99-9066	1	Clip-Wire
729A	119-2163	1	Clip-Wire
729B	119-2164	1	Clip-Wire
729C	119-2165	1	Clamp
773	99-9067	1	Retainer
806	99-9270	1	Screw-Hex
812	99-9061	1	Nut-Hex, Metric
871	99-9070	1	Bushing-Guide
883	99-9178	1	Gasket-Exhaust
1022	99-9073	1	Gasket-Cover, Rocker
1023	117-4901	1	Cover-Rocker
1067	99-9168	1	Gasket-Pump, Water
1077	99-9076	1	Bracket-Lifting
1130	99-9055	1	Stud-Metric
1170	99-9056	1	Screw-Hex
1171	99-9101	1	Stud-Arm, Rocker
1176	99-9175	1	Nut-Hex, Metric

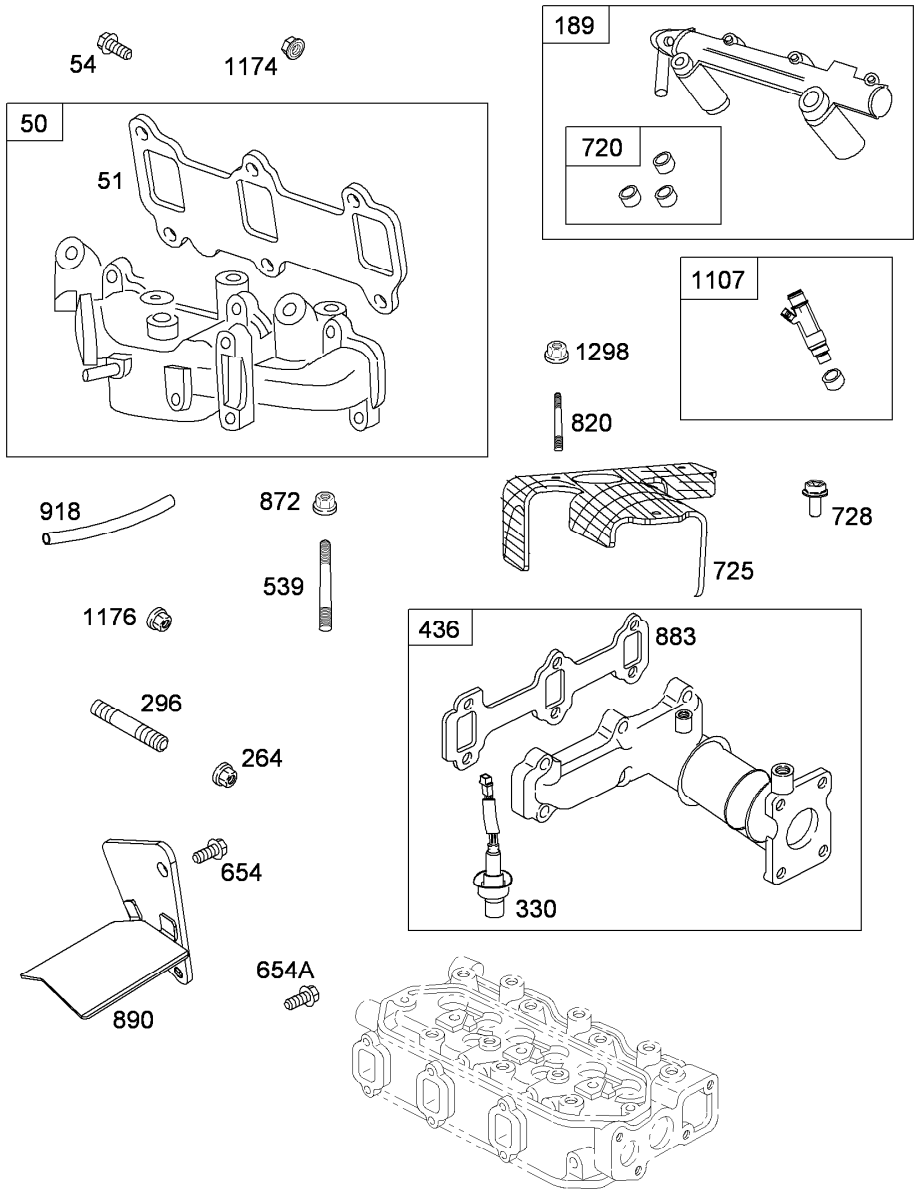

Manifold Assembly

Ref.	Part Number	Qty.	Description
50	117-4902	1	Manifold-Intake
51	99-9173	1	Gasket-Intake
54	99-9004	1	Screw-Hex
189	117-4903	1	Rail-Injector, Fuel
264	99-9176	1	Nut-Hex
296	99-9677	1	Stud-Manifold, Exhaust
330	117-4904	1	Sensor-Oxygen
436	117-4905	1	Manifold-Exhaust
539	117-4906	1	Stud
654	119-2167	1	Screw
654A	119-2166	1	Screw
720	117-4907	1	Seal-Injector, Fuel

Ref.	Part Number	Qty.	Description
725	117-4908	1	Shield-Heat
728	117-4909	1	Screw
820	99-9112	1	Stud-Metric
872	117-4910	1	Nut
883	99-9178	1	Gasket-Exhaust
890	117-4911	1	Bracket-Support
918	105-9330	1	Hose-Vacuum
1107	117-4913	1	Nozzle-Injector
1174	99-9114	1	Nut-Hex, Metric
1176	99-9175	1	Nut-Hex, Metric
1298	99-9113	1	Nut-Hex, Metric

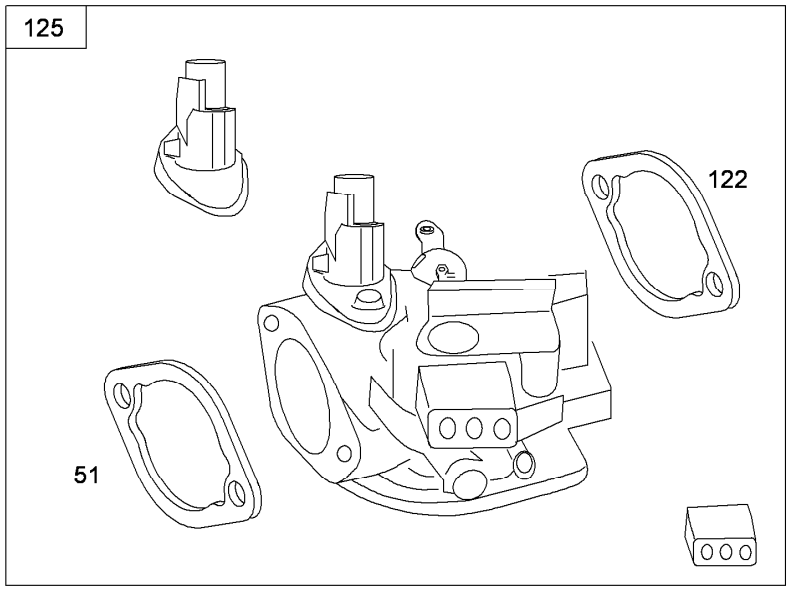

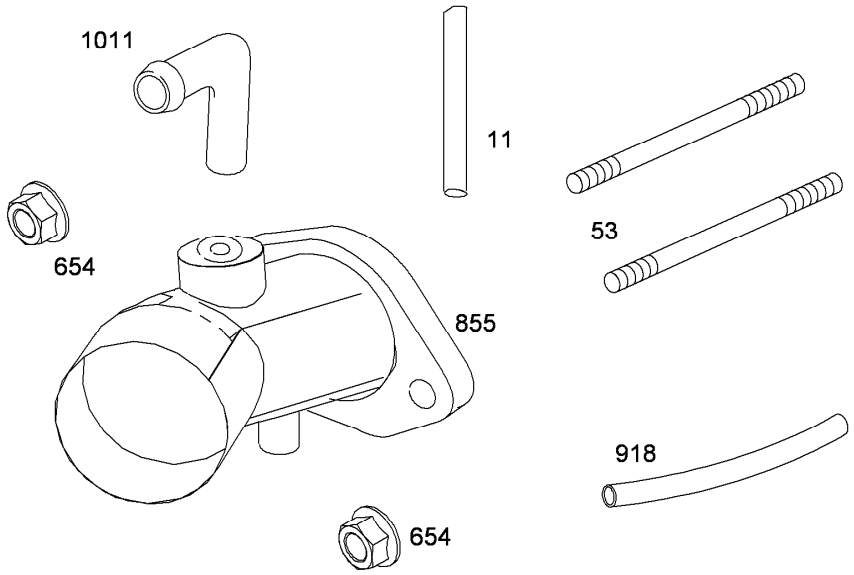

Carburetor Assembly

Ref.	*Part Number*	*Qty.*	*Description*
11	105-9322	1	Hose-Breather
51	105-9329	1	Gasket-Funnel, Air
53	106-1854	1	Stud (Carburetor)
122	99-9184	1	Spacer-Carburetor
125	117-4915	1	Body-Throttle
654	99-9186	1	Nut-Hex, Metric (Carburetor)
855	105-9328	1	Funnel-Air
918	117-4912	1	Hose-Vacuum
1011	99-9198	1	Tube-Vent

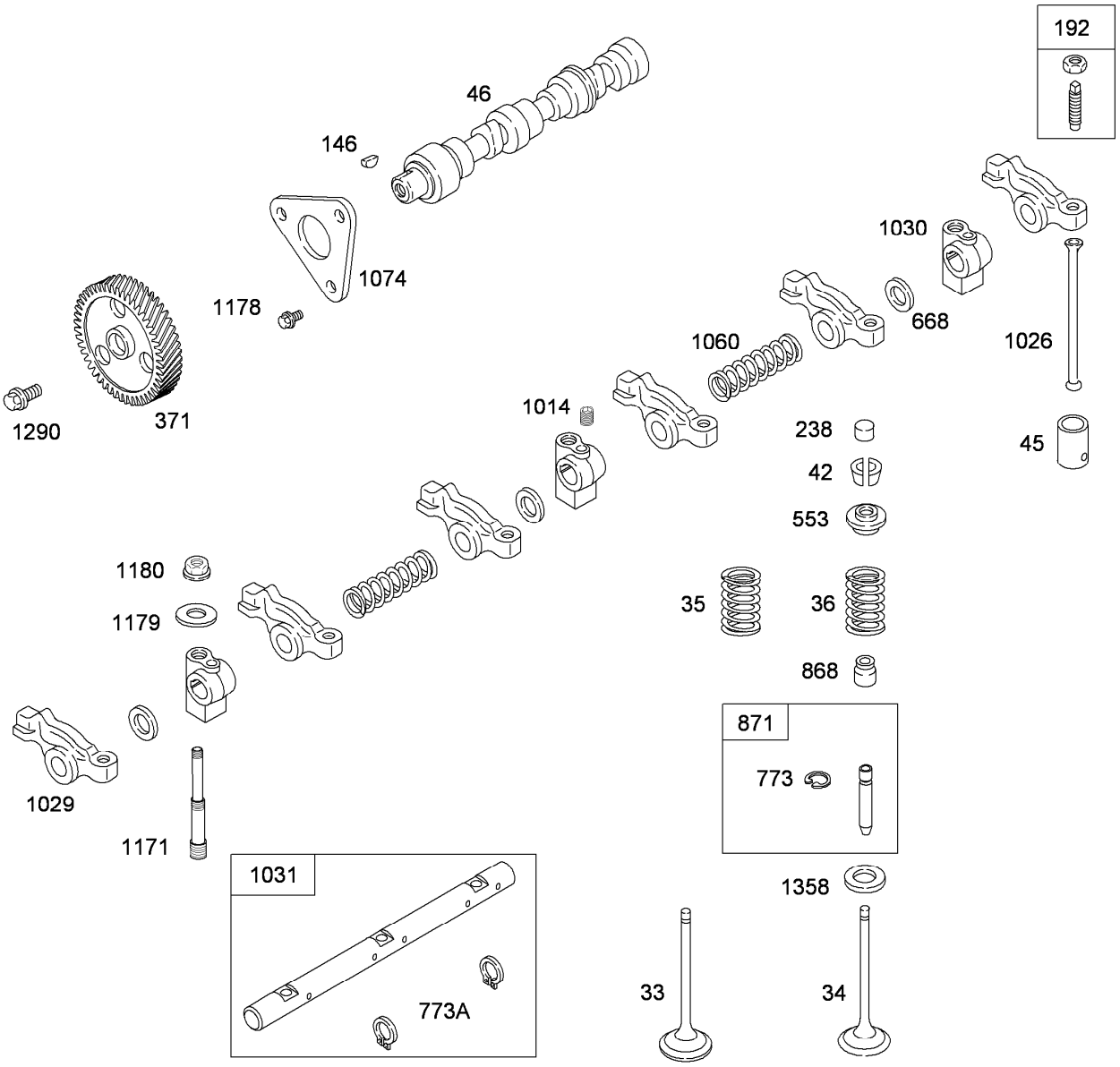

Camshaft Assembly

Ref.	Part Number	Qty.	Description
33	99-9080	1	Valve-Exhaust
34	99-9081	1	Valve-Intake
35	99-9640	1	Spring-Valve
36	99-9640	1	Spring-Valve
42	99-9086	2	Keeper-Valve (Set)
45	99-9088	1	Tappet-Valve
46	99-9097	1	Shaft-Cam
146	99-9095	1	Key-Woodruff
192	112-2978	1	Adjuster-Arm, Rocker
238	112-2979	1	Cap-Valve
371	99-9641	1	Gear-Cam
553	99-9084	1	Retainer-Valve
668	99-9093	1	Washer-Spacer
773	99-9067	1	Retainer
773A	99-9099	1	Retainer

Ref.	Part Number	Qty.	Description
868	99-9102	1	Seal-Valve
871	99-9070	1	Bushing-Guide
1014	99-9090	1	Screw-Metric
1026	112-2980	1	Rod-Push
1029	99-9104	1	Arm-Rocker
1030	99-9107	1	Support-Arm, Rocker
1031	99-9106	1	Shaft-Arm, Rocker
1060	99-9108	1	Spring-Shaft, Rocker
1074	99-9109	1	Retainer-Camshaft
1171	99-9101	1	Stud-Arm, Rocker
1178	99-9083	1	Screw-Hex
1179	99-9079	1	Washer-Flat
1180	99-9091	1	Nut-Hex, Metric
1290	99-9085	1	Screw-Metric
1358	99-9096	1	Seat-Spring, Valve

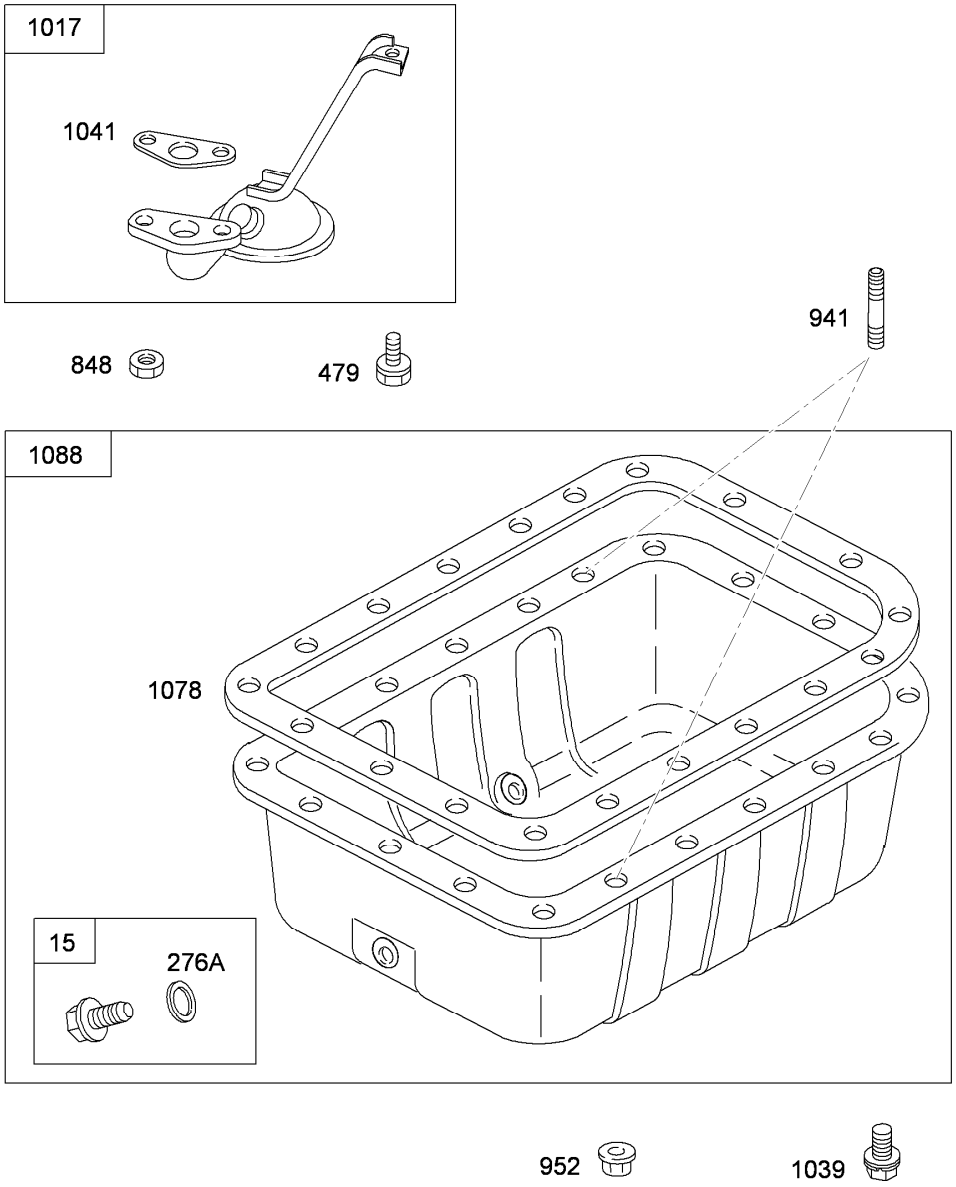

Oil Pan Assembly

Ref.	*Part Number*	*Qty.*	*Description*
15	99-9644	1	Plug-Drain, Oil
276A	99-9645	1	Washer-Seal (Oil Drain Plug)
479	99-9646	1	Screw-6Mm Hex (Oil Pump Screen)
848	99-9114	1	Nut-Hex, Metric (Oil Pump Screen)
941	99-9112	1	Stud-Metric (Oil Pan)
952	99-9113	1	Nut-Hex, Metric (Oil Pan)
1017	99-9116	1	Screen-Pump, Oil
1039	117-4919	1	Screw (Oil Pan)
1041	99-9120	1	Gasket-Strainer, Oil
1078	99-9121	1	Gasket-Pan, Oil
1088	99-9649	1	Pan-Oil

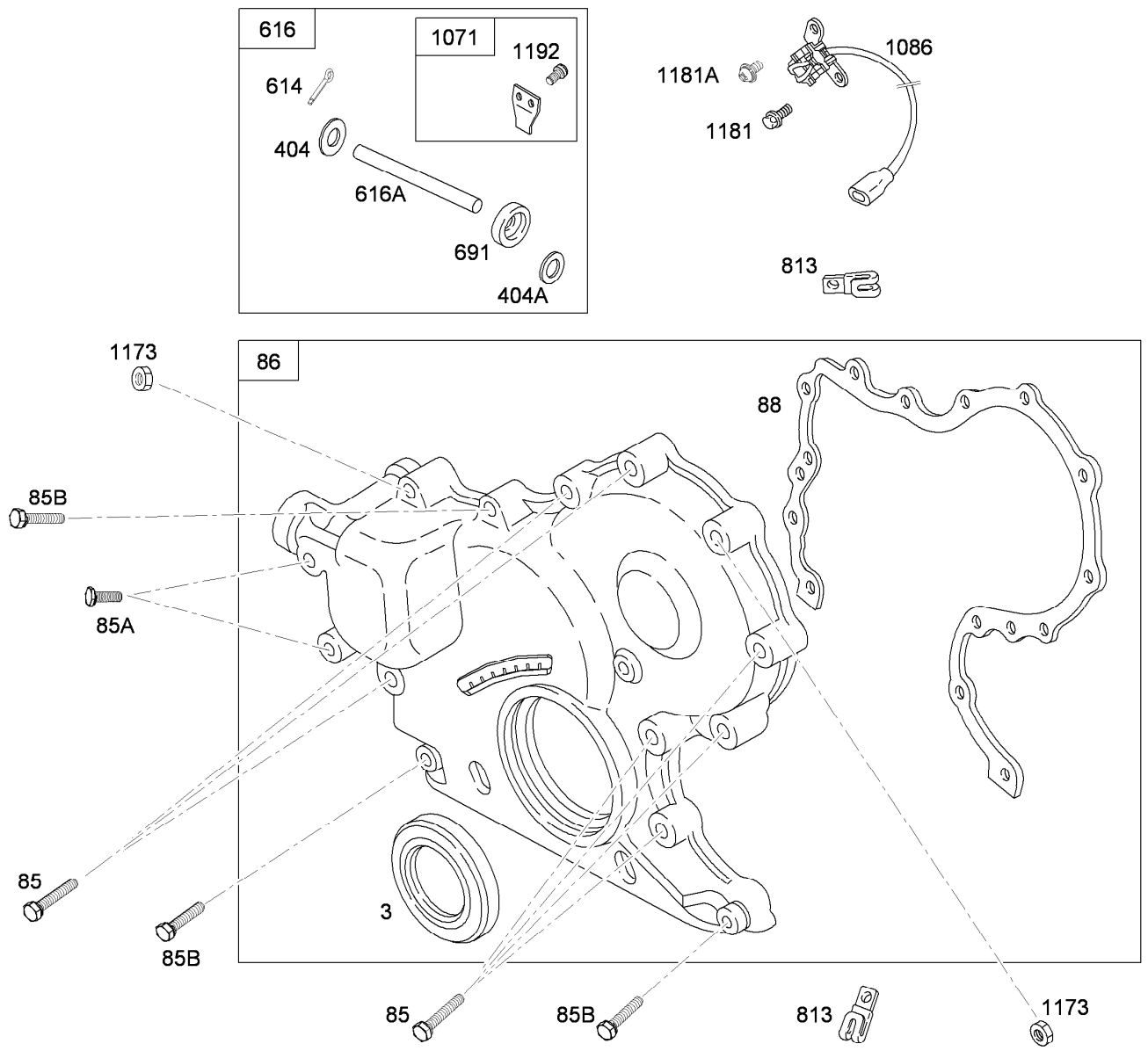

Gear Cover Assembly

Ref.	Part Number	Qty.	Description
3	115-2291	1	Seal-Oil (Magneto Side)
85	99-9128	1	Screw-Hex (Gear Cover To Gear Reduction Case)
85A	99-9127	1	Screw-Hex (Gear Cover To Gear Reduction Case)
85B	99-9129	1	Screw-Hex (Gear Cover To Gear Reduction Case)
86	115-2304	1	Gear Cover ASM
88	99-9132	1	Gasket-Cover, Gear Reduction
404	99-9140	1	Washer-Spacer (Governor Crank)
404A	99-9141	1	Washer-Spacer (Governor Crank)

Ref.	Part Number	Qty.	Description
614	99-9053	1	Pin-Cotter
616	99-9147	1	Crank-Governor
616A	99-9146	1	Crank-Governor (Shaft)
691	99-9131	1	Seal-Shaft, Governor
813	99-9208	1	Clamp
1071	99-9149	1	Paddle-Governor
1086	117-4920	1	Trigger-Ignition
1173	99-9114	1	Nut-Hex, Metric (Gear Cover)
1181	99-9128	1	Screw-Hex (Ignition Trigger)
1181A	99-9210	1	Screw-Phillips (Ignition Trigger)
1192	99-9143	1	Screw-Hex, Torx (Governor Paddle)

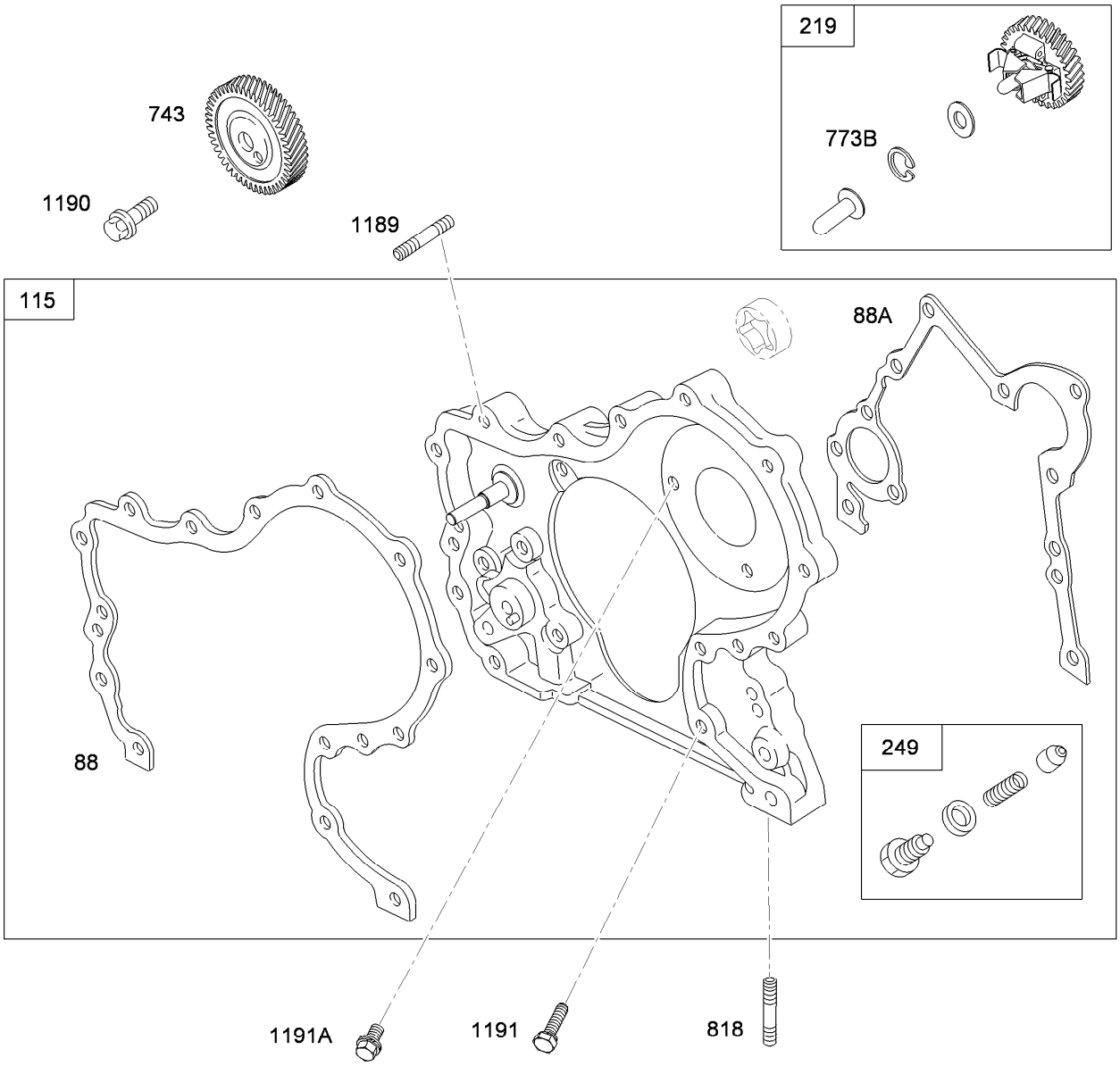

Gear Housing Assembly

Ref.	*Part Number*	*Qty.*	*Description*
88	99-9132	1	Gasket-Cover, Gear Reduction
88A	99-9136	1	Gasket-Cover, Gear Reduction
115	99-9138	1	Housing-Gear
219	99-9261	1	Gear-Governor
249	99-9142	1	Valve-Relief, Oil
743	99-9656	1	Gear-Drive
773B	99-9145	1	Retainer
818	99-9007	1	Stud-Metric
1189	99-9137	1	Stud-Metric
1190	99-9616	1	Screw-Hex
1191	99-9133	1	Screw-Hex
1191A	99-9134	1	Screw-Hex

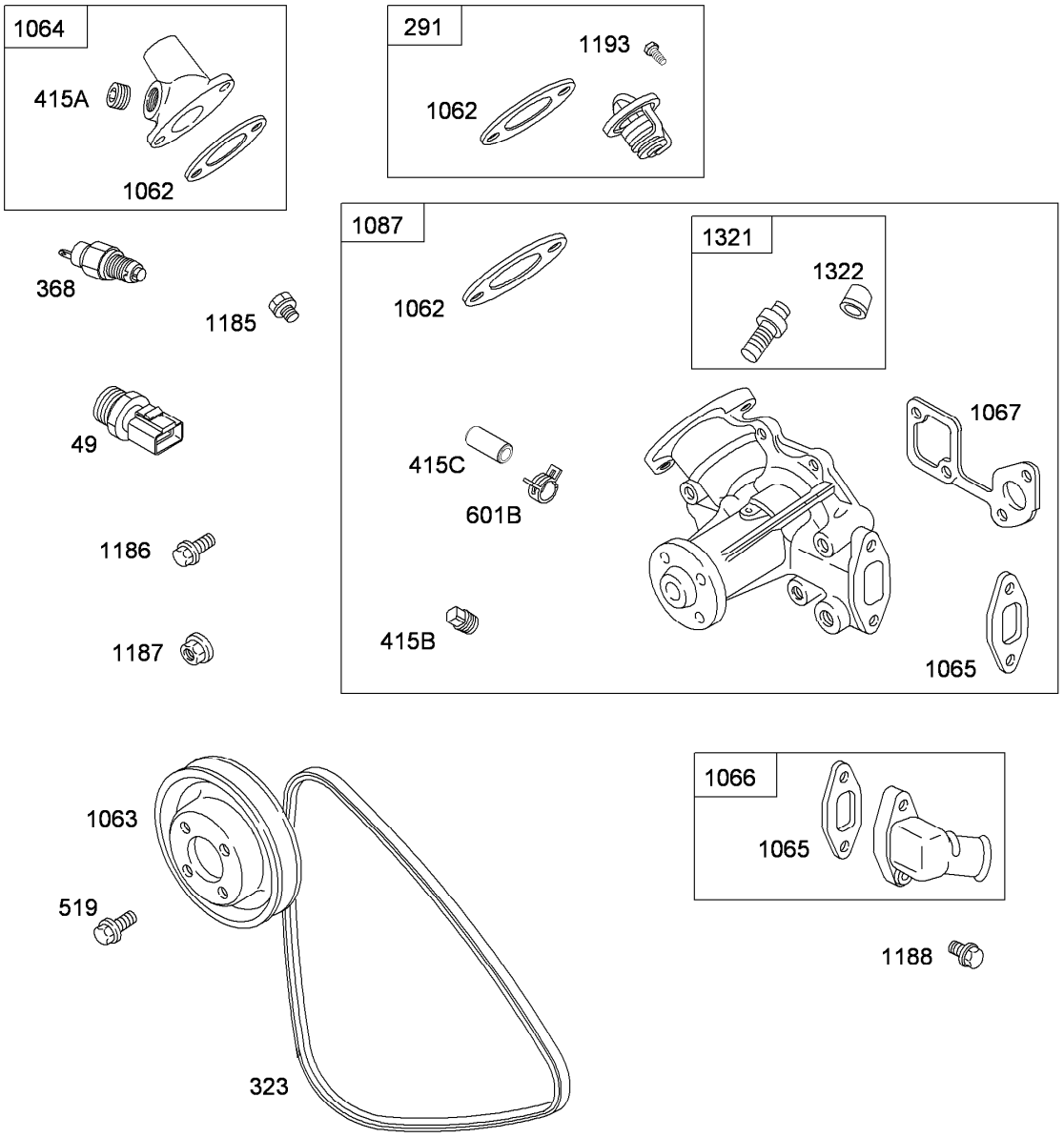

Water Pump Assembly

Ref.	Part Number	Qty.	Description
49	117-4921	1	Sensor-Temperature, Water
291	99-9155	1	Thermostat
323	117-4922	1	Belt-Vee
368	117-4923	1	Switch-Temperature, Water (Radiator Control)
415A	99-9158	1	Plug (Outlet Housing)
415B	99-9159	1	Plug (Water Pump)
415C	106-1888	1	Tube-Vent (Water Pump)
519	117-4919	1	Screw (Radiator Fan)
601B	106-1885	1	Clamp-Hose (Plug)
1062	99-9163	1	Gasket-Housing, Outlet
1063	99-9164	1	Pulley-Pump
1064	99-9165	1	Housing-Outlet

Ref.	Part Number	Qty.	Description
1065	99-9166	1	Gasket-Housing, Inlet
1066	99-9167	1	Housing-Inlet
1067	99-9168	1	Gasket-Pump, Water
1087	119-0656	1	Pump-Water
1185	99-9004	1	Screw-Hex (Outlet Housing)
1186	99-9151	1	Screw-Hex (Water Pump)
1187	99-9153	1	Nut-Hex, Metric (Water Pump)
1188	99-9004	1	Screw-Hex (Inlet Housing)
1193	99-9152	1	Screw-Metric (Thermostat)J
1321	117-4925	1	Plug-Bleeder
1322	117-4926	1	Cap-Bleeder

232

202

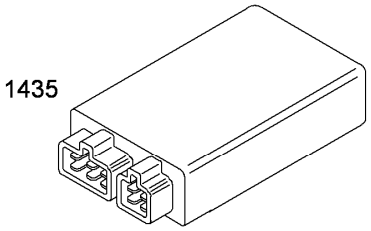

1435

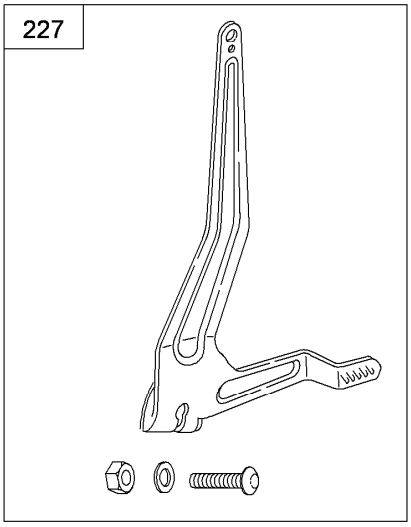

227

Controls Assembly

Ref.	*Part Number*	*Qty.*	*Description*
202	99-9187	1	Link-Governor, Mechanical
227	99-9191	1	Lever-Governor
232	99-9192	1	Spring-Link, Governor
1435	114-8371	1	Module-Injection, Fuel

1.2 kw Purple / Brown Label

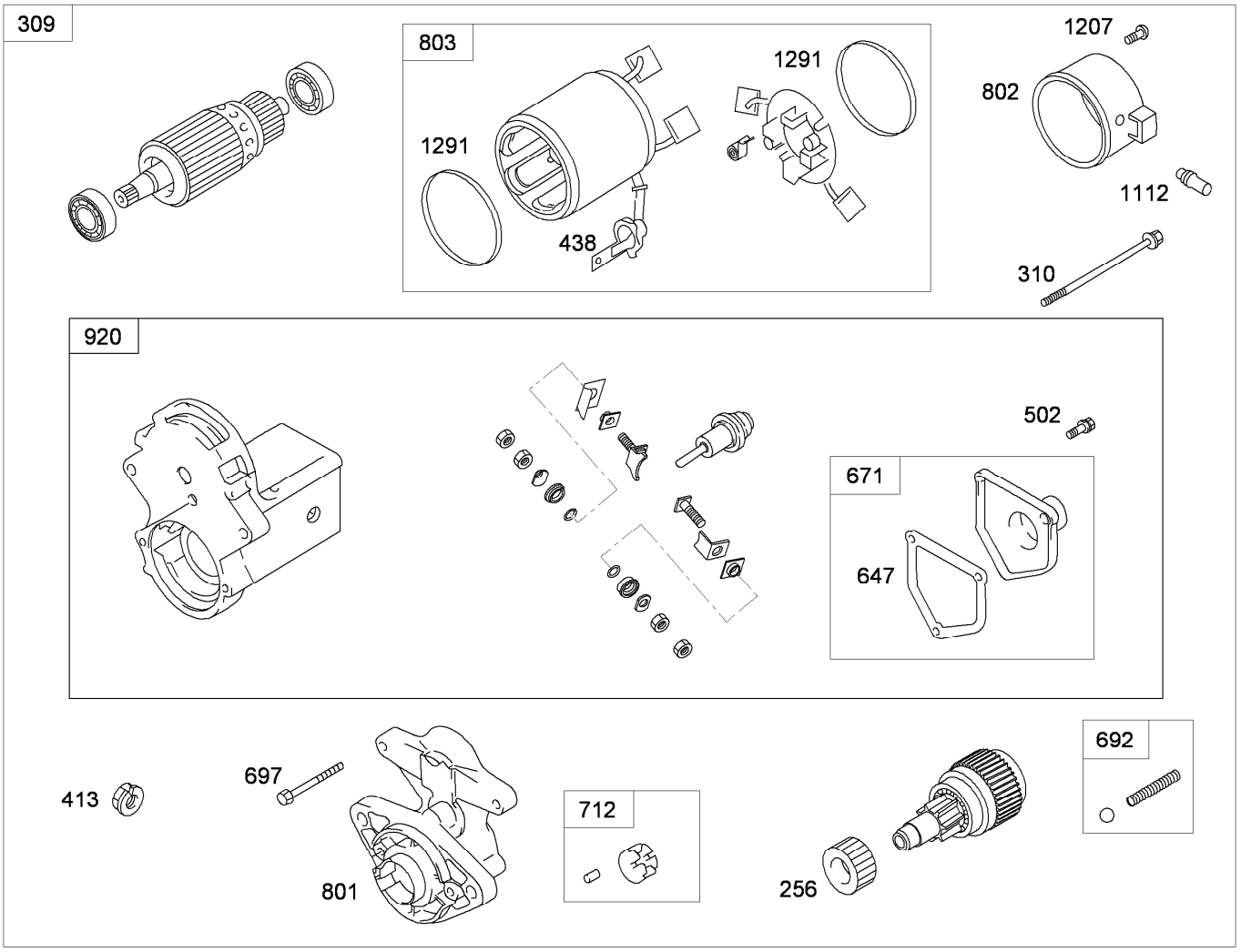

Starter Motor Assembly

Ref.	Part Number	Qty.	Description
256	112-2987	1	Gear-Drive, Starter
309	110-2598	1	Motor-Starter
310	112-2988	1	Screw (Starter Motor)
413	99-9206	1	Nut-Hex, Metric (Starter Motor)
438	112-2989	1	Boot-Terminal
502	112-2990	1	Screw (Solenoid Cover)
647	112-2993	1	Gasket-Cover, Solenoid
671	112-2994	1	Cover-Solenoid
692	112-2996	1	Detent-Spring
697	112-2997	1	Screw (Drive Cap)

Ref.	Part Number	Qty.	Description
712	112-2998	1	Roller-Clutch
801	112-2999	1	Cap-Drive
802	112-3000	1	Cap-End
803	112-3001	1	Housing-Starter
920	112-3002	1	Solenoid-Starter
1009	99-9201	1	Screw-Hex (Starter Motor)
1112	112-3003	1	Plug-Vent (End Cap)
1207	112-3004	1	Screw (End Cap)
1291	112-3005	1	Seal-O Ring (Starter Housing)

60 Amp

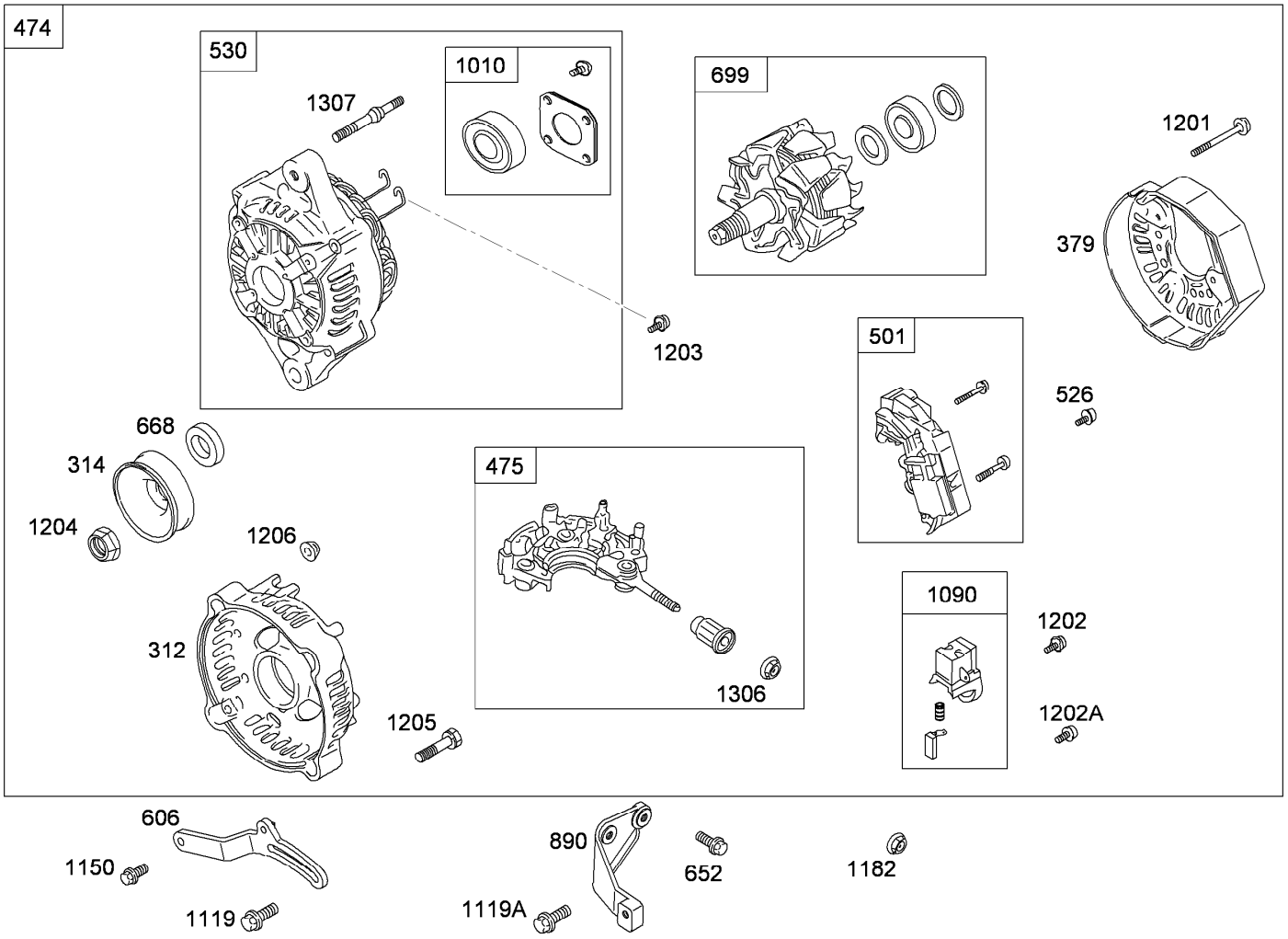

Alternator Assembly

Ref.	Part Number	Qty.	Description
312	117-4927	1	Housing-End, Brush
314	117-4928	1	Pulley-Alternator
379	117-4929	1	Cover-Brush
474	115-9473	1	Alternator-60Amp
475	117-4930	1	Rectifier
501	117-4931	1	Regulator
526	106-1894	1	Screw (Rectifier)
530	117-4932	1	Housing-End, Drive
606	99-9212	1	Bracket-Adjusting
652	99-9203	1	Screw-Hex (Support Bracket)
668	106-1896	1	Spacer (Rotor Asm)
699	117-4933	1	Rotor ASM
890	99-9211	1	Bracket-Support
1010	106-1898	1	Retainer-Bearing
1090	106-1899	1	Retainer-Brush

Ref.	Part Number	Qty.	Description
1119	99-9105	1	Screw-Hex (Alternator)
1119A	99-9205	1	Screw-Hex, Metric (Alternator)
1150	99-9202	1	Screw-Hex (Adjusting Bracket)
1182	99-9114	1	Nut-Hex, Metric (Alternator)
1201	106-1950	1	Screw (Brush Cover)
1202	106-1951	1	Screw (Brush Retainer)
1202A	106-1894	1	Screw (Brush Retainer)
1203	106-1894	1	Screw (Stator Wire)
1204	106-1954	1	Nut (Alternator Pulley)
1205	106-1955	1	Screw (Brush End Housing)
1206	106-1956	1	Nut (Brush End Housing)
1306	117-4934	1	Nut (Rectifier)
1307	117-4935	1	Stud (Drive End Housing)

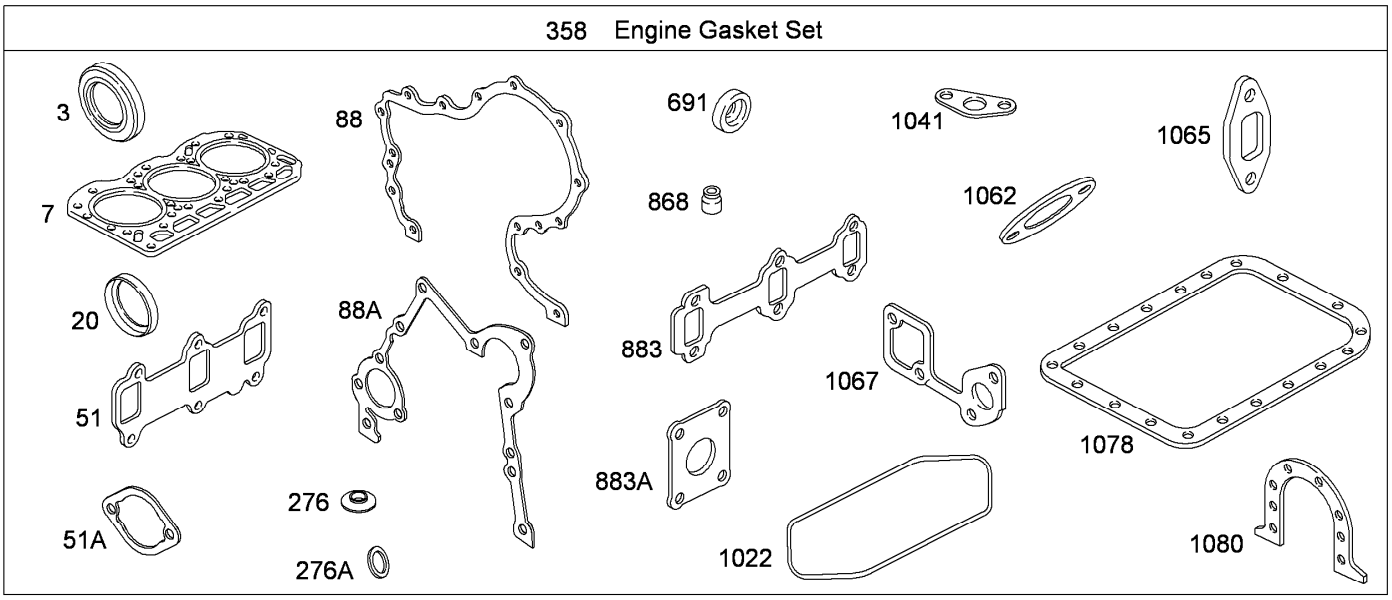

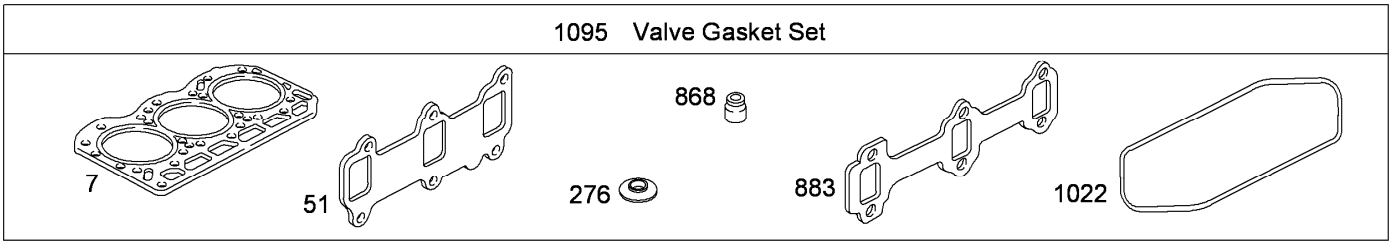

Engine Gasket Set

Ref.	*Part Number*	*Qty.*	*Description*
3	115-2291	1	Seal-Oil
7	99-9254	1	Gasket-Head, Cylinder
20	117-4887	1	Seal-Oil
51	99-9173	1	Gasket-Intake
51A	105-9329	1	Gasket-Funnel, Air
88	99-9132	1	Gasket-Cover, Gear Reduction
88A	99-9136	1	Gasket-Cover, Gear Reduction
276	99-9063	1	Washer-Seal
276A	99-9645	1	Washer-Seal
358	99-9263	1	Engine Gasket Set

Ref.	*Part Number*	*Qty.*	*Description*
691	99-9131	1	Seal-Shaft, Governor
868	99-9102	1	Seal-Valve
883	99-9178	1	Gasket-Exhaust
883A	99-9179	1	Gasket-Exhaust
1022	99-9073	1	Gasket-Cover, Rocker
1041	99-9120	1	Gasket-Strainer, Oil
1062	99-9163	1	Gasket-Housing, Outlet
1065	99-9166	1	Gasket-Housing, Inlet
1067	99-9168	1	Gasket-Pump, Water
1078	99-9121	1	Gasket-Pan, Oil
1080	99-9021	1	Gasket-Retainer
1095	99-9264	1	Valve Overhaul Kit

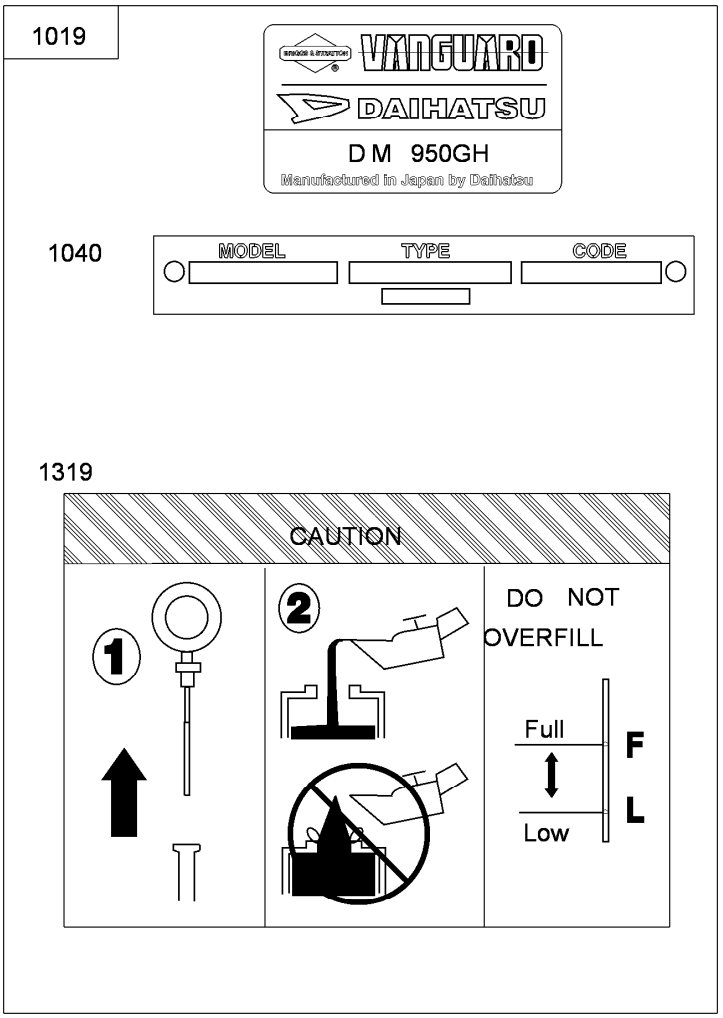

1058 Operator Manual

Engine Label Set

Ref.	*Part Number*	*Qty.*	*Description*
1019	117-4936	1	Label Kit
1040	117-4937	1	Plate-Trim
1058	115-7843	1	Manual-Engine, EFI
1319	117-4938	1	Label-Warning

Attachments and Accessories

For 07370 Workman HDX 4-Wheel Drive Utility Vehicle with Bed

Product Name	Model/Part
Full Area Flatbed	07301
Full Area Flatbed Side Kit	07302
Fold Down Side Kit	07303
High-Flow Hydraulic Kit	07316
2/3 Area Flatbed	07321
2/3 Area Flatbed Side Kit	07322
Bed Liner	07331
Cab	07339
1/3 Area Flatbed	07341
1/3 Area Stake Side Kit	07342
1/3 Area Platform Lift	07344
Heater Kit	07349
Canopy	07372
Windshield	07373
Cab Door Kit	07375
Solid Window Cab Door Kit	07376
Hitch Frame Kit	07377
4 Post Roll-Over Protection System	07378
Rear PTO Kit	07419
Hand Throttle Kit	07420
Spiker	08856
Finish Grader	08867
Backup Alarm Kit	107-8037
Premium Engine Oil, 10w30 (55 Gallon Drum)	108-1179
Premium Engine Oil, 10w30 (5 Gallon Pail)	108-1180
Premium ATF (Drum)	108-1185
Premium ATF (Pail)	108-1186
Premium All Purpose Grease (Tube)	108-1190
Remote Hydraulics Manifold Kit	110-2626
Tire-Rear, 24x13-12	110-5132
Spark Arrestor Kit	112-1688
Wheel-12in x 8.0in	114-8260
Horn Kit	115-7825
High Air Intake Kit	115-7848
Side Mirror Kit	115-7849
Roll-Over Protection System Signal Kit	117-4825
Worklight Kit	117-4827
Remote Hydraulic Float Kit	117-4828
Cab Mirror Kit	117-4830
Receiver Hitch Kit	117-4831
Trailer Signal Kit	117-4836
Trailer Brake Kit	117-4837
24x13-12 Tire and Wheel ASM	117-4838
Sprayer Cylinder Lift Kit, Workman 200 Spray System	117-4846
Engine Cover Kit	117-4867
Manual 4-Wheel Drive Control Kit	119-0817

Attachments and Accessories (continued)

Harness-Wire, Speedometer Adapter....119-1762
Tapered Nozzle Kit....119-6280
Rectangular Nozzle Kit....119-6281
Nozzle-Extension, Straight....119-6282
Nozzle-Extension, Tapered....119-6283
Nozzle-Extension, Rectangular....119-6284
Canopy for Four-Post Roll-Over Protection System Kit....119-9457
Road Light and Homologation Kit....120-5030
Brake and Signal Light Kit....120-5045
Single Nozzle Kit....41024
Hose Reel Kit....41097
Spray Gun Kit 9 (inc. 25ft Of 1/2in Hose)....41133
Pro Foam Concentrate (4 x 1 Gallon)....41157
Sonic Boom Kit....41217
Workman 200 Spray System....41235
Foam Marker Kit....41236
Spreader Base Unit....41253
Vicon Spreader....41256
Topdresser 1800....44225
Core Harvester Adapter Kit....44242
Pro Force Debris Blower....44538
Road-Ready Pro Force Debris Blower....44539
Workman HD Bed Mount Kit, Pro Force Debris Blower....44544
Bed Mount Sound Barrier Kit, Pro Force Debris Blower....44546
ProPass 200 Top Dresser with Twin Spinner and Wireless Control....44700
ProPass 200 Top Dresser with Twin Spinner....44701
Twin Spinner....44702
Conveyor and Swivel Kit....44703
Tow-Type Chassis....44704
Tow-Type Chassis Fender Kit....44705
Tow-Type Chassis Hose Assembly Kit....44706
Toro Workman Chassis....44707
Storage Stand....44712
Hydraulic Power Pack....44713
Automatic Tailgate Release Kit....92-1220
Fuse Block....92-2641
PTO Over Running Clutch Kit....92-2655
Topdresser 1800 Lift Kit....92-4452
Mid-Mount Kit for Platform Lift....93-3741
1/3 Area Cover Kit....93-9225
Rear 1/3 Area Mounting Kit....93-9249
Tire-Rear, 23x8.50-12....98-2993
Tire-Rear, Industrial....99-1091

Notes:

Count on it.