Form No. 3382-467 Rev C

TORO®

Count on it.

Parts Catalog

# Workman® HDX Utility Vehicle with Bed

**Model No. 07384—Serial No. 314000001 and Up**

**Model No. 07384H—Serial No. 314000001 and Up**

Register at www.Toro.com.
Original Instructions (EN)

*3382-467* C

# Ordering Replacement Parts

To order replacement parts, please supply the part number, the quantity, and the description of each part desired.

### Understanding Reference Numbers

Each identified part in an illustration has a reference number. The reference number for a part also appears in the parts list, along with other information about the part.

This catalog uses two special reference number formats, one to indicate parts in a service assembly and another to indicate the quantity of a given part in an illustration.

### Service Assembly Reference Numbers

Parts in service assemblies have reference numbers in the form a:b. The a represents the reference number of the entire service assembly and the b represents a sequential number unique to each part within the service assembly.

For example, a wheel assembly might be identified by reference number 6, the tire by 6:1, the valve by 6:2, and the wheel by 6:3. When you order the assembly identified by reference number 6, you receive all parts identified by reference numbers 6:1,6:2, and 6:3. However, you may also order any part individually. Reference numbers of this type appear in illustration and in parts lists.

### Reference Numbers Indicating Quantity

In an illustration, if a reference number indicates more than one part, the reference number has the form nX y. The n represents the quantity of the part, the X is the multiplication symbol, and the y represents the reference number.

For example, in an illustration, the reference number 2X 37 means that two of the parts identified by reference number 37 are indicated.

# Contents


Front Frame Assembly . . . 5
Rear Frame and Suspension Assembly . . . 6
Rear Axle Assembly . . . 7
Brake Caliper Assembly No. 119-9535 . . . 8
Driveshaft Assembly No. 114-8367 . . . 9
Front and Rear Brake Line Assembly . . . 10
Front Suspension Assembly . . . 11
Steering and Front Wheel Assembly . . . 12
Steering Linkage Assembly . . . 13
Hydraulic Cylinder Assembly No. 112-3217 . . . 14
Front Control Arm Assembly . . . 15
Brake and Clutch Pedal Assembly . . . 16
Master Cylinder Assembly No. 104-6782 . . . 17
Accelerator Assembly . . . 18
Console Assembly . . . 19
Shift Assembly No. 106-7887 . . . 21
Bumper, Hood and Seat Base Assembly . . . 22
Dash Assembly . . . 23
Steering Hydraulic Assembly . . . 24
Steering Valve Assembly No. 120-4813 . . . 25
Seat Assembly . . . 26
Roll-Over Protection System Assembly . . . 27
Full Bed and Side Panel Assembly . . . 28
Engine Sub Frame Assembly . . . 29
Engine and Exhaust Assembly . . . 30
Cooling System Assembly . . . 31
Radiator Assembly . . . 32
Clutch Linkage Assembly . . . 33
Transaxle Assembly . . . 34
Case Assembly Transaxle Assembly No. 115-7783 . . . 35
Center Plate Assembly Transaxle Assembly No. 115-7783 . . . 36
Main Shaft Assembly Transaxle Assembly No. 115-7783 . . . 37
Reduction Shaft Assembly Transaxle Assembly No. 115-7783 . . . 38
Reverse Shaft Assembly Transaxle Assembly No. 115-7783 . . . 39
Main Shift Assembly Transaxle Assembly No. 115-7783 . . . 40
Hi-Lo Shift Assembly Transaxle Assembly No. 115-7783 . . . 41
Countershaft Assembly Transaxle Assembly No. 115-7783 . . . 42
Differential Gear Assembly Transaxle Assembly No. 115-7783 . . . 43
Differential Carrier Assembly Transaxle Assembly No. 115-7783 . . . 44
Differential Lock Assembly Transaxle Assembly No. 115-7783 . . . 45
Axle Shaft Assembly Transaxle Assembly No. 115-7783 . . . 46
Battery Assembly . . . 47
Tail Light and Fender Assembly . . . 48
Fuel System Assembly . . . 49
Hydraulic Lift Cylinder Assembly . . . 50
Hydraulic Cylinder Assembly No. 106-7939 . . . 52
Main Hydraulic Pump and Lift Valve Assembly . . . 53
Control Valve Assembly No. 43-1950 . . . 54
Hydraulic Gear Pump Assembly No. 114-8302 . . . 55
Air Cleaner Assembly . . . 56
Air Cleaner Assembly No. 106-5277 . . . 57
Front and Rear Wire Harness Assembly . . . 58
Crankcase Assembly . . . 59
Oil Pan Assembly . . . 60



**© 2018—The Toro® Company**


**8111 Lyndale Avenue South**
**Bloomington, MN 55420**





**Contact us at www.Toro.com.**
**Printed in the USA.**


**All Rights Reserved**

# Contents (continued)

Cylinder Head Assembly . . . 61
Gear Case and Oil Filter Cartridge Assembly . . . 62
Cylinder Head Cover Assembly . . . 63
Dipstick, Guide and Oil Pump Assembly . . . 64
Main Bearing Case Assembly . . . 65
Cam Shaft and Idle Gear Shaft Assembly . . . 66
Piston and Crankshaft Assembly . . . 67
Flywheel, Starter and Sensor Switch Assembly . . . 68
Injection and Fuel Pump Covers Assembly . . . 69
Thermostat and Water Pump Assembly . . . 70
Alternator and Pulley Assembly . . . 72
Alternator Components Assembly . . . 73
Starter Components Assembly . . . 74
Valve and Rocker Arm Assembly . . . 75
Inlet Manifold Assembly . . . 76
Exhaust Manifold Assembly . . . 77
Wire Harness Assembly . . . 78
Electronic Control Unit Assembly . . . 79
Operator Manual and Miscellaneous Engine Parts . . . 80
Upper Engine Gasket Kit . . . 81
Lower Engine Gasket Kit . . . 82
Attachments and Accessories . . . 83

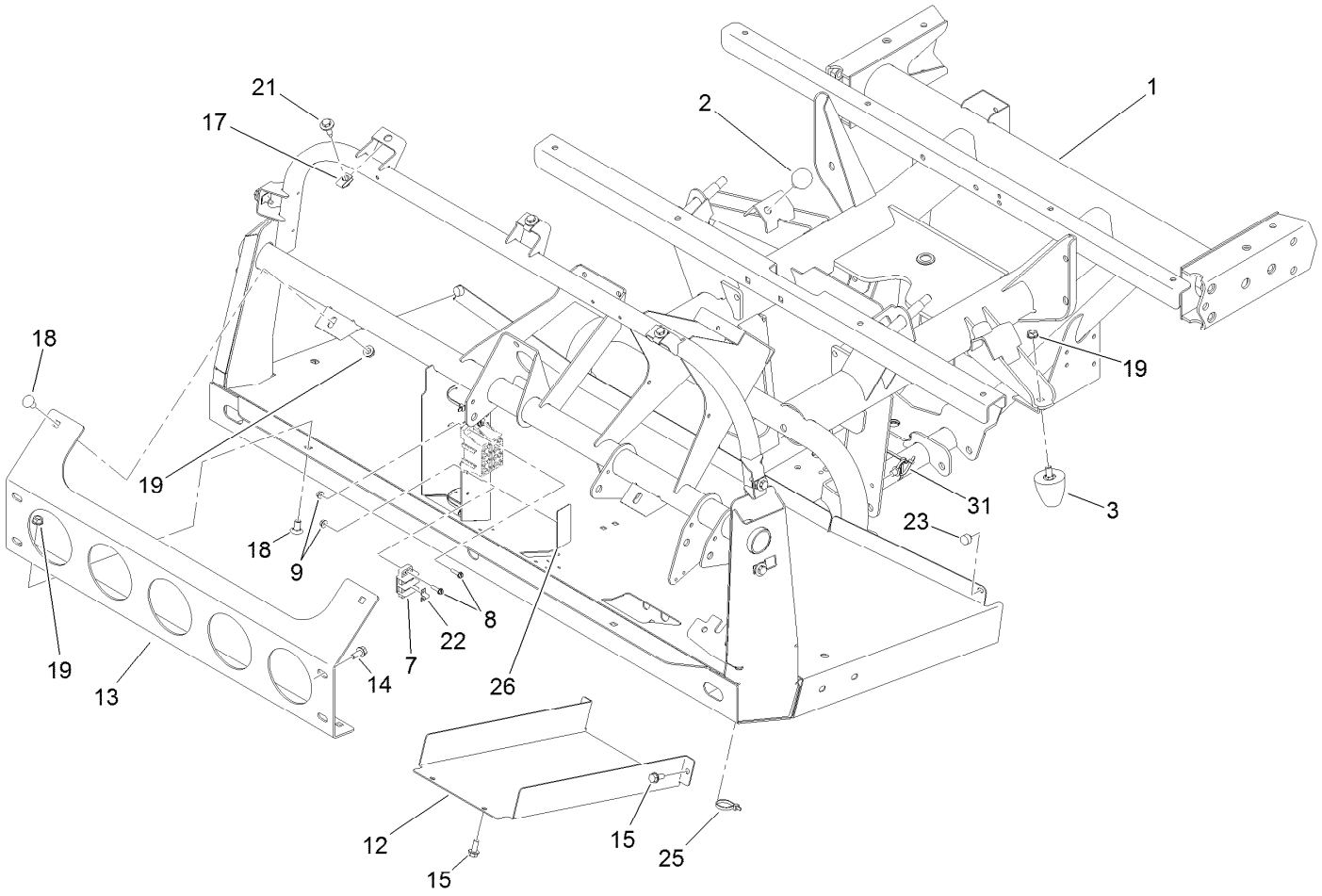


# Front Frame Assembly

| Ref. | Part Number | Qty. | Description |
|---|---|---|---|
| 1 | 120-5083-03 | 1 | Frame-Front |
| 2 | 87-2440 | 2 | Bumper-Rubber |
| 3 | 26-0071 | 2 | Snubber-Rubber |
| 7 | 42862 | 1 | Block-Terminal, Ground |
| 8 | 32105-13 | 6 | Screw-HWH |
| 9 | 3290-148 | 6 | Nut-HF |
| 12 | 106-2427-03 | 1 | Cover |
| 13 | 114-8272-03 | 1 | Bracket-Bumper |
| 14 | 3234-5 | 4 | Screw-HHF |
| 15 | 32144-11 | 4 | Screw-Thd Roll, HWH |

| Ref. | Part Number | Qty. | Description |
|---|---|---|---|
| 17 | 94-2413 | 7 | Nut-U |
| 18 | 3231-21 | 4 | Screw-CARR |
| 19 | 3290-357 | 6 | Nut-HHF, Whiz |
| 21 | 114-8418 | 7 | Screw-HWH, Sems |
| 22 | 42863 | 1 | Strip-Jumper |
| 23 | 107-8042 | 2 | Bumper-Rubber |
| 25 | 3290-379 | 9 | Tie-Cable |
| 26 | 115-7813 | 1 | Decal-Fuse |
| 31 | 32180-030 | 2 | Clip-Tie |

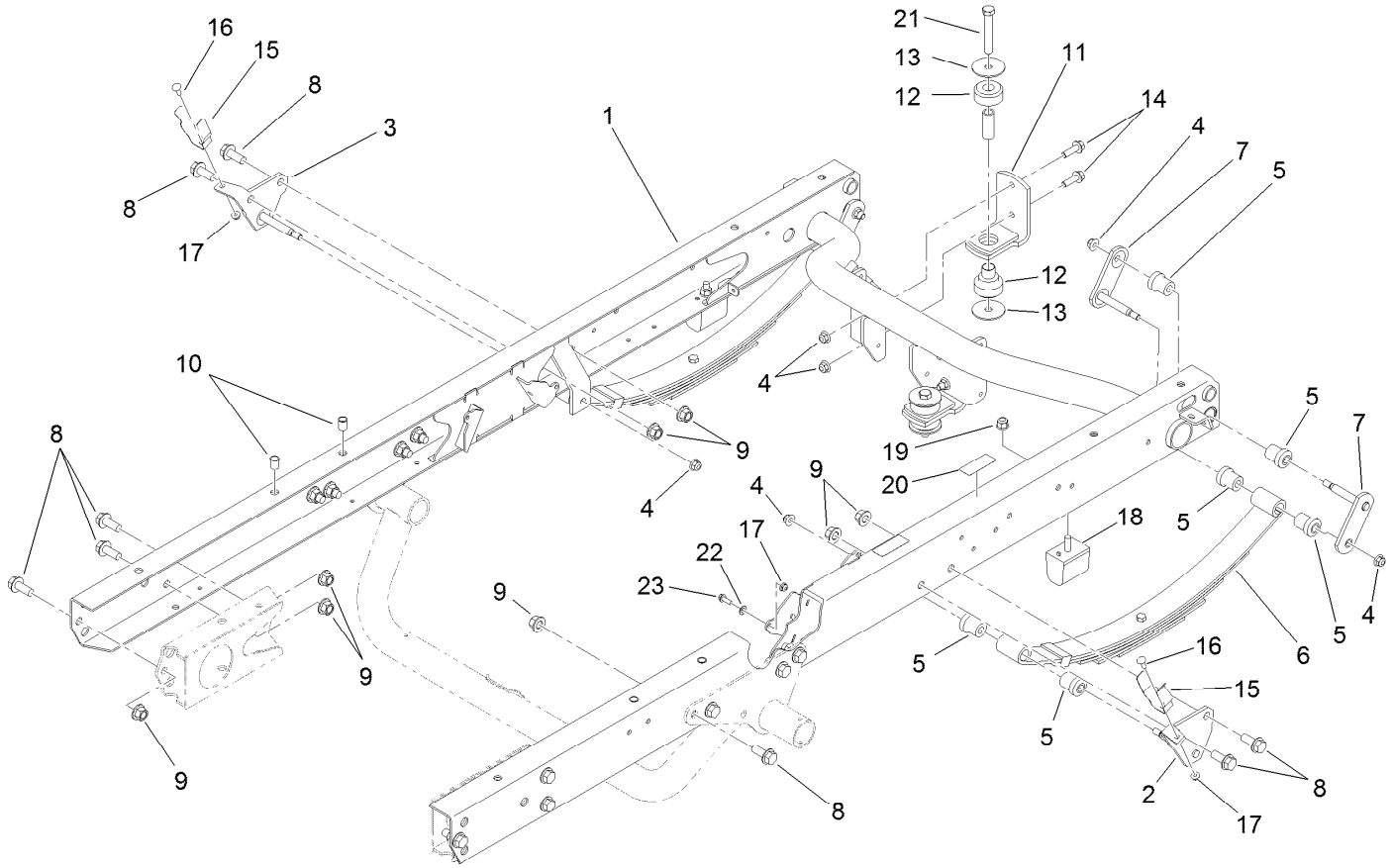


# Rear Frame and Suspension Assembly

| Ref. | Part Number | Qty. | Description |
|---|---|---|---|
| 1 | 115-2255-03 | 1 | Frame-Rear |
| 2 | 87-3960 | 1 | Mount-Spring, LH |
| 3 | 87-3940 | 1 | Mount-Spring, RH |
| 4 | 104-8301 | 10 | Nut-HF, NI |
| 5 | 87-4760 | 12 | Bushing-Rubber |
| 6 | 87-1490 | 2 | Spring-Leaf, Rear |
| 7 | 87-3980 | 4 | Shackle ASM |
| 8 | 3234-38 | 18 | Screw-HHF |
| 9 | 99-5107 | 18 | Nut-Lock |
| 10 | 32148-9 | 4 | Nut-Clinch |
| 11 | 87-5800-03 | 2 | Mount-Transaxle |
| 12 | 106-7865 | 2 | Mount-Engine |

| Ref. | Part Number | Qty. | Description |
|---|---|---|---|
| 13 | 87-5100 | 4 | Washer-Snubbing |
| 14 | 3234-24 | 4 | Screw-HHF |
| 15 | 108-3109 | 2 | Retainer-Cylinder |
| 16 | 3229-1 | 2 | Bolt-CARR |
| 17 | 104-7201 | 3 | Nut-HF |
| 18 | 87-3470 | 2 | Bumper |
| 19 | 103-9511 | 2 | Nut-Lock, NI |
| 20 | 115-2047 | 2 | Decal-Surface, Hot |
| 21 | 33116-080 | 2 | Screw-HH |
| 22 | 3255-8 | 1 | Washer-Lock |
| 23 | 32105-15 | 1 | Screw-HWH |

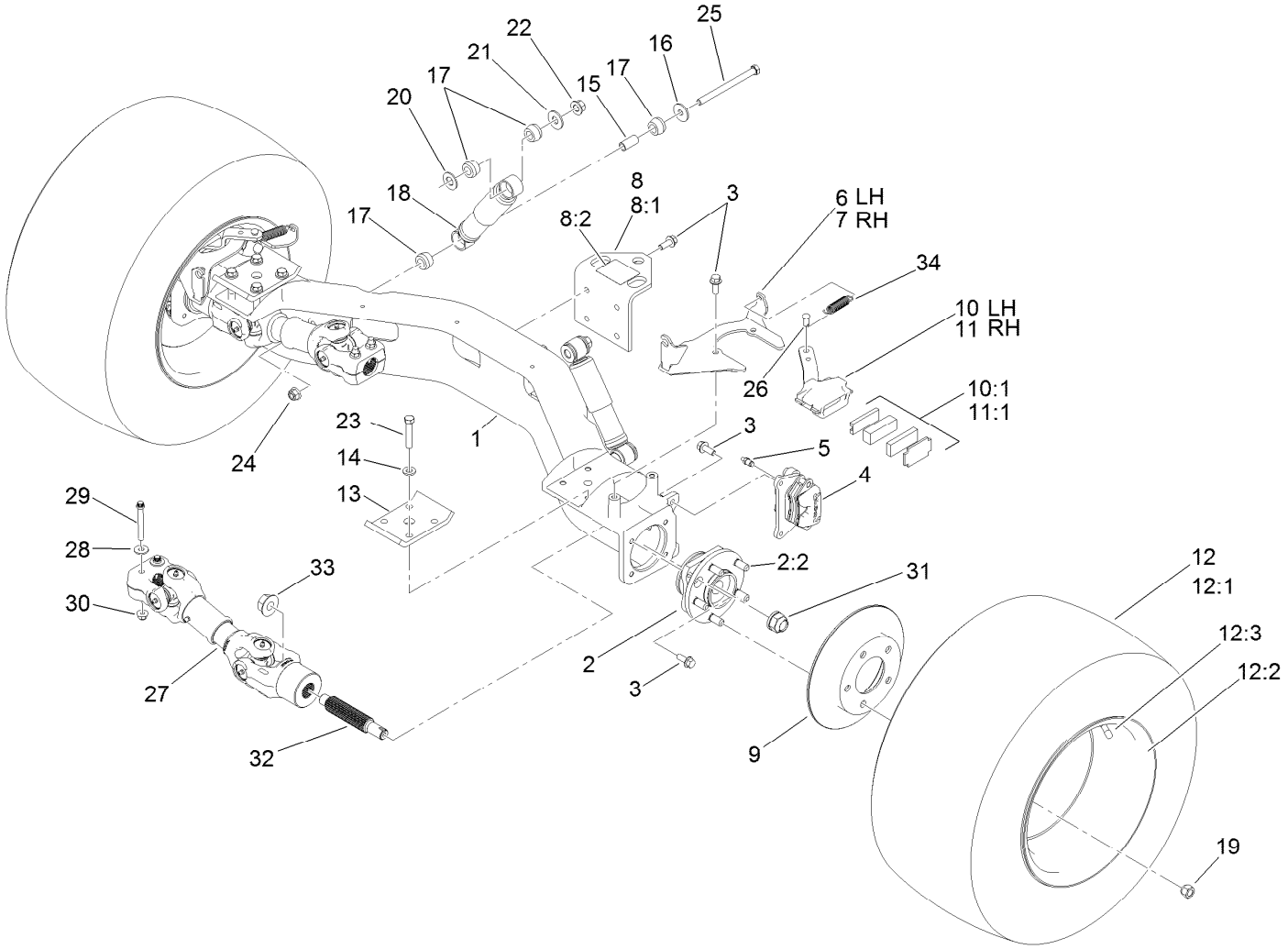


# Rear Axle Assembly

| Ref. | Part Number | Qty. | Description |
|---|---|---|---|
| 1 | 119-9515 | 1 | Axle-Rear |
| 2 | 121-9751 | 2 | Hub-Bearing, Wheel |
| 2:2 | 121-9752 | 5 | Stud-Wheel |
| 3 | 3234-11 | 20 | Screw-HHF |
| 4 | 119-9535 | 2 | Brake Caliper ASM |
| 5 | 119-9509 | 2 | Screw-Bleed |
| 6 | 115-2362-03 | 1 | Bracket-Caliper, LH |
| 7 | 115-2359-03 | 1 | Bracket-Caliper, RH |
| 8 | 115-7742 | 1 | Hitch ASM |
| 8:1 | 92-5951-03 | 1 | Angle-Hitch |
| 8:2 | 115-7740 | 1 | Decal-Load, Towing |
| 9 | 114-8351 | 2 | Rotor-Brake |
| 10 | 114-8365 | 1 | Caliper-Mechanical, LH |
| 10:1 | 115-7847 | 1 | Parking Brake Pad Kit |
| 11 | 114-8366 | 1 | Caliper-Mechanical, RH |
| 11:1 | 115-7847 | 1 | Parking Brake Pad Kit |
| 12 | 114-8288 | 2 | Tire And Wheel ASM |
| 12:1 | 106-7868 | 1 | Tire |
| 12:2 | 114-8259 | 1 | Wheel |
| 12:3 | 232-27 | 1 | Stem-Valve |
| 13 | 87-7470-03 | 2 | Plate-Spring, Clamp |

| Ref. | Part Number | Qty. | Description |
|---|---|---|---|
| 14 | 87-7480 | 8 | Washer |
| 15 | 87-3600 | 2 | Spacer-Absorber, Shock |
| 16 | 87-5330 | 2 | Washer |
| 17 | 87-3920 | 8 | Bushing |
| 18 | 87-3110 | 2 | Absorber-Shock |
| 19 | 242-50 | 10 | Nut-Lug |
| 20 | 3256-27 | 2 | Washer-Flat |
| 21 | 3256-6 | 2 | Washer-Flat |
| 22 | 99-5107 | 2 | Nut-Lock |
| 23 | 115-2398 | 8 | Bolt-HH |
| 24 | 114-8417 | 2 | Nut-HF, NI |
| 25 | 114-8424 | 2 | Screw-HH |
| 26 | 283-85 | 2 | Pin-Clevis |
| 27 | 114-8367 | 2 | Driveshaft ASM |
| 28 | 80-6990 | 4 | Washer-Hardened |
| 29 | 98-2939 | 4 | Screw-Cap |
| 30 | 104-8301 | 4 | Nut-HF, NI |
| 31 | 115-2164 | 2 | Nut-Spindle |
| 32 | 115-7771 | 2 | Shaft, Splined |
| 33 | 104-0753 | 2 | Nut-Flange |
| 34 | 104-6415 | 2 | Spring-Return, Pedal |

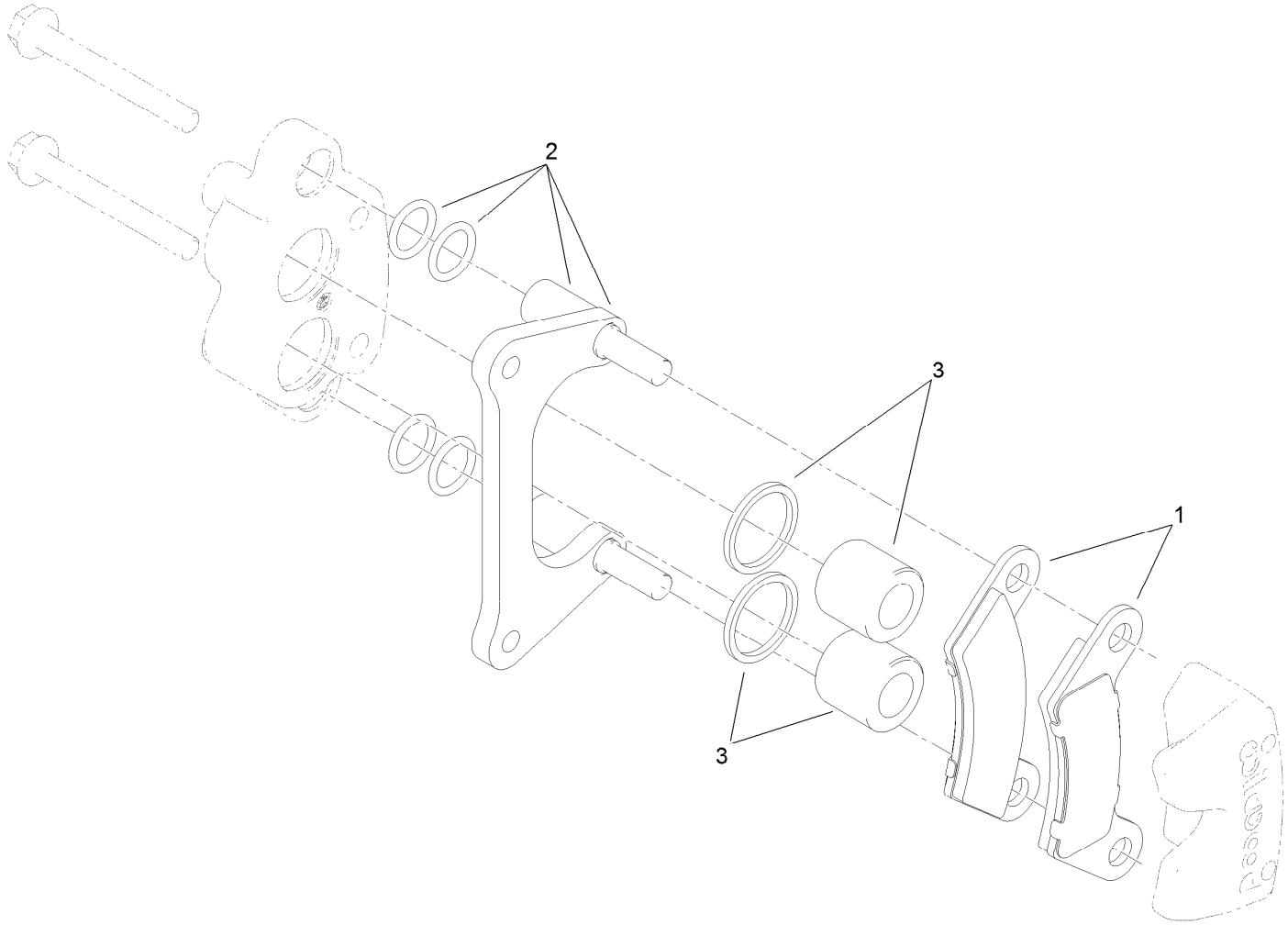


# Brake Caliper Assembly No. 119-9535

| *Ref.* | *Part Number* | *Qty.* | *Description* |
|---|---|---|---|
| 1 | 119-9510 | 1 | Pads-Brake |
| 2 | 119-9511 | 1 | Bracket Kit |
| 3 | 119-9512 | 1 | Piston Kit |

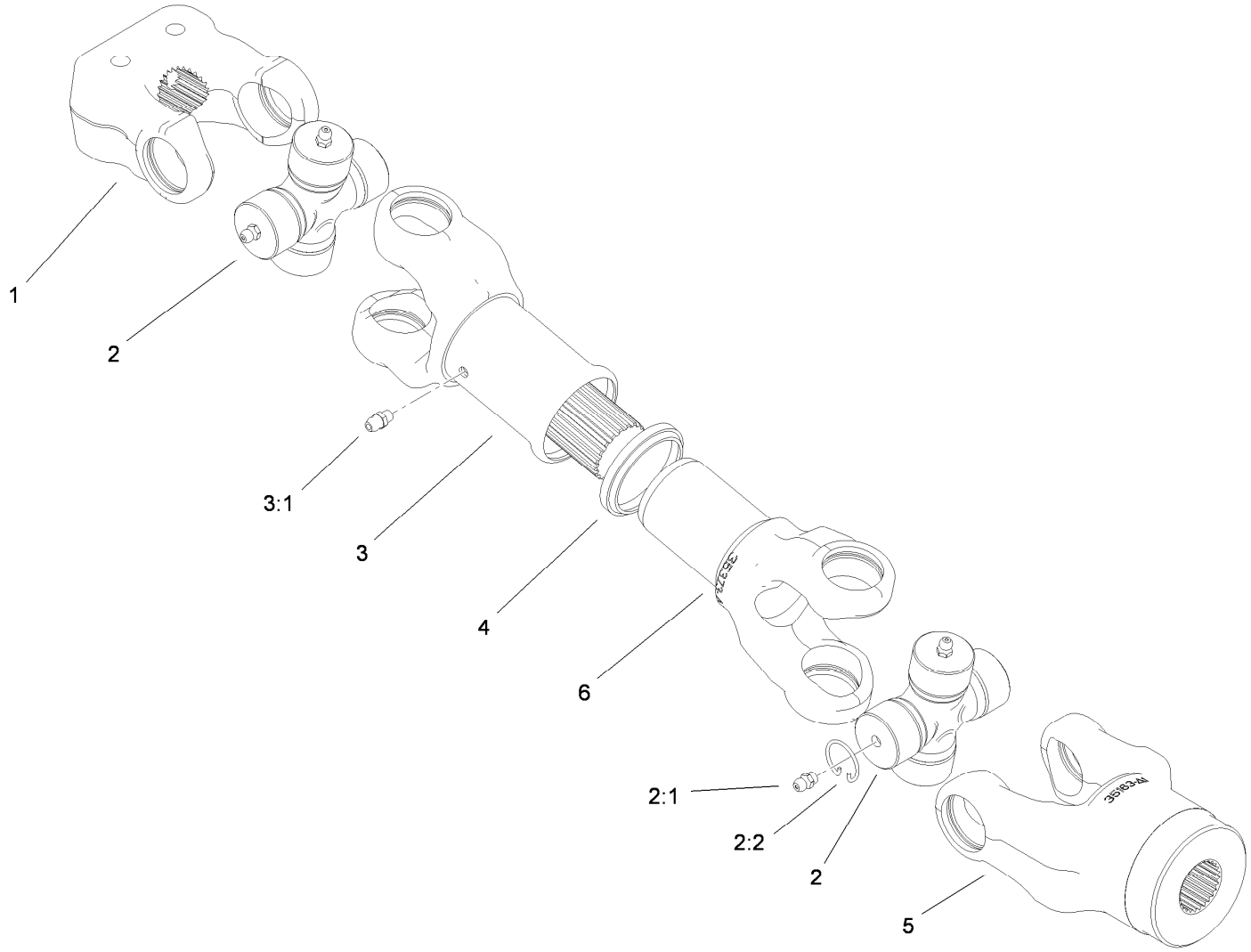


# Driveshaft Assembly No. 114-8367

| Ref. | Part Number | Qty. | Description |
|---|---|---|---|
| 1 | 98-2940 | 1 | Yoke |
| 2 | 92-4187 | 2 | Cross And Bearing Kit |
| 2:1 | 302-58 | 4 | Fitting-Straight |
| 2:2 | 92-4188 | 4 | Ring-Snap |
| 3 | 92-4179 | 1 | Yoke-Tube, Shaft And Seal |
| 3:1 | 302-5 | 1 | Fitting-Grease |
| 4 | 92-4180 | 1 | Seal |
| 5 | 115-2351 | 1 | Yoke |
| 6 | 92-4182 | 1 | Yoke-Telescoping |

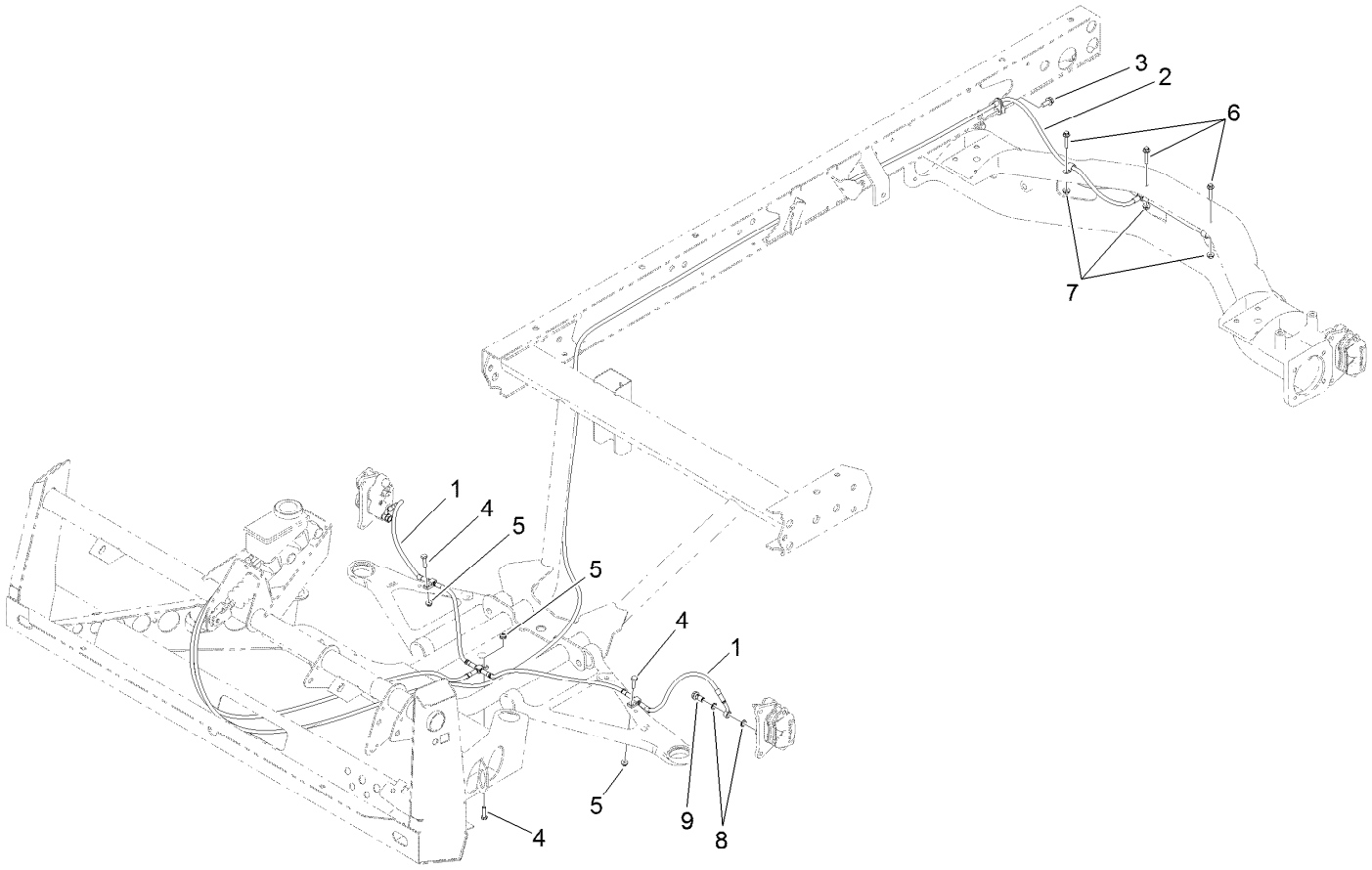


# Front and Rear Brake Line Assembly

| *Ref.* | *Part Number* | *Qty.* | *Description* |
|---|---|---|---|
| 1 | 119-9682 | 1 | Front Brake Line ASM |
| 2 | 119-9681 | 1 | Rear Brake Line ASM |
| 3 | 32144-11 | 1 | Screw-Thd Roll, HWH |
| 4 | 321-6 | 3 | Screw-HH |
| 5 | 104-7201 | 3 | Nut-HF |
| 6 | 3234-21 | 3 | Screw-HHF |
| 7 | 32128-33 | 3 | Nut-HF |
| 8 | 115-2341 | 8 | Washer-Banjo |
| 9 | 120-4875 | 4 | Bolt-Flange, Banjo |

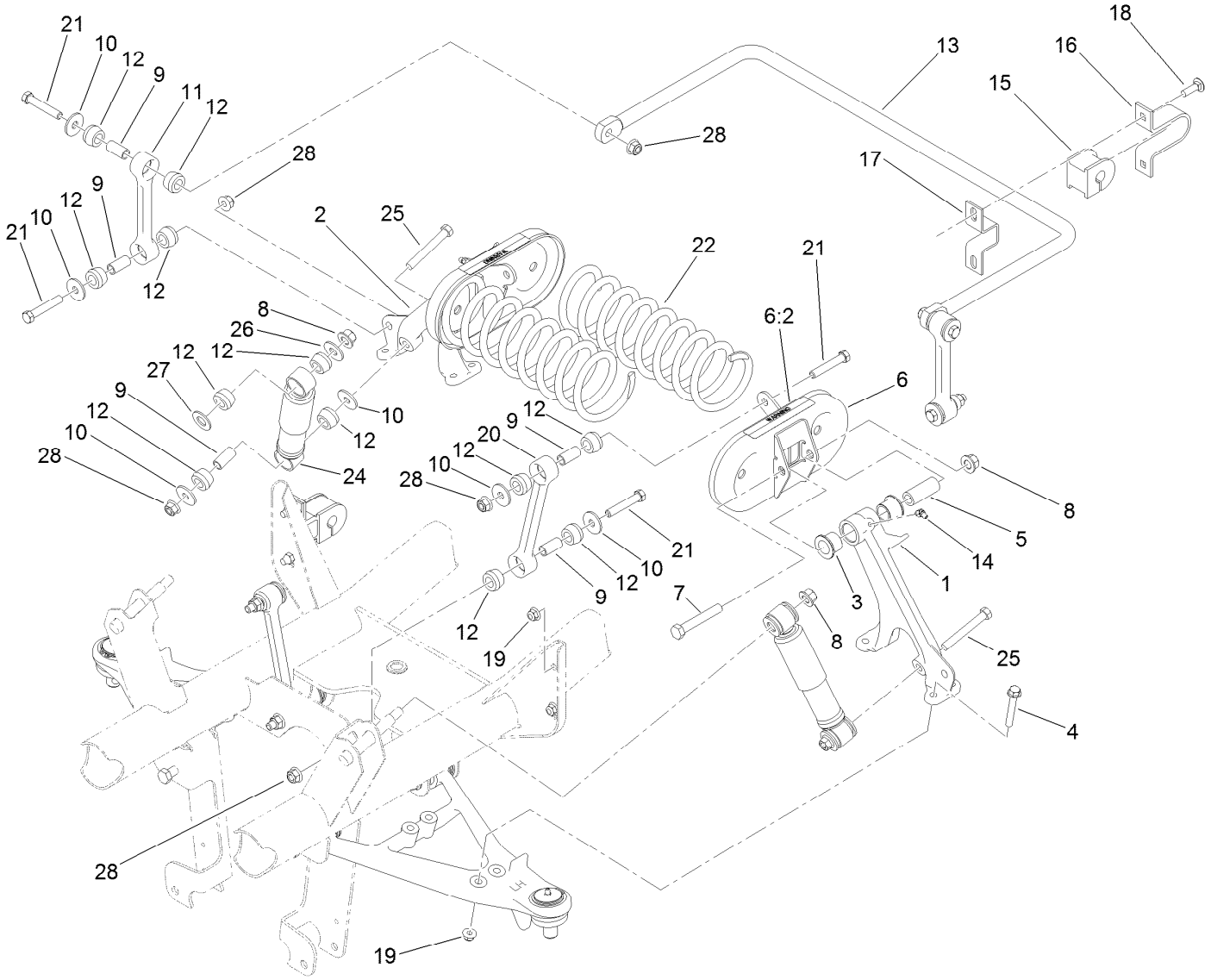


# Front Suspension Assembly

| Ref. | Part Number | Qty. | Description |
|---|---|---|---|
| 1 | 87-0160 | 1 | Tower-Control Arm, LH |
| 2 | 87-0150 | 1 | Tower-Control Arm, RH |
| 3 | 33-3090 | 4 | Bushing |
| 4 | 3234-39 | 8 | Screw-HHF |
| 5 | 87-2500 | 2 | Sleeve-Spring, Pivot |
| 6 | 105-7958 | 2 | Spring Cradle ASM |
| 6:2 | 93-9879 | 1 | Decal-Warning |
| 7 | 325-13 | 2 | Screw-HH |
| 8 | 99-5107 | 4 | Nut-Lock |
| 9 | 87-3600 | 10 | Spacer-Absorber, Shock |
| 10 | 87-5330 | 12 | Washer |
| 11 | 119-6725 | 2 | Link, Anti-Sway Bar |
| 12 | 87-3920 | 24 | Bushing |
| 13 | 87-3850-03 | 1 | Bar-Sway, Anti |

| Ref. | Part Number | Qty. | Description |
|---|---|---|---|
| 14 | 302-11 | 2 | Fitting-Lube, 45 DEG |
| 15 | 87-3910 | 2 | Bushing-Rubber |
| 16 | 87-4010-03 | 2 | Clamp-Bar, Sway |
| 17 | 87-3890-03 | 2 | Bracket-Bar, Sway |
| 18 | 3231-25 | 4 | Bolt-CARR |
| 19 | 104-8301 | 12 | Nut-HF, NI |
| 20 | 119-6724 | 2 | Link-Stabilizer |
| 21 | 324-10 | 8 | Screw-HH |
| 22 | 105-4183-01 | 2 | Spring-Compression |
| 24 | 87-3110 | 2 | Absorber-Shock |
| 25 | 324-13 | 2 | Screw-HH |
| 26 | 3256-6 | 2 | Washer-Flat |
| 27 | 3256-27 | 2 | Washer-Flat |
| 28 | 114-8417 | 10 | Nut-HF, NI |

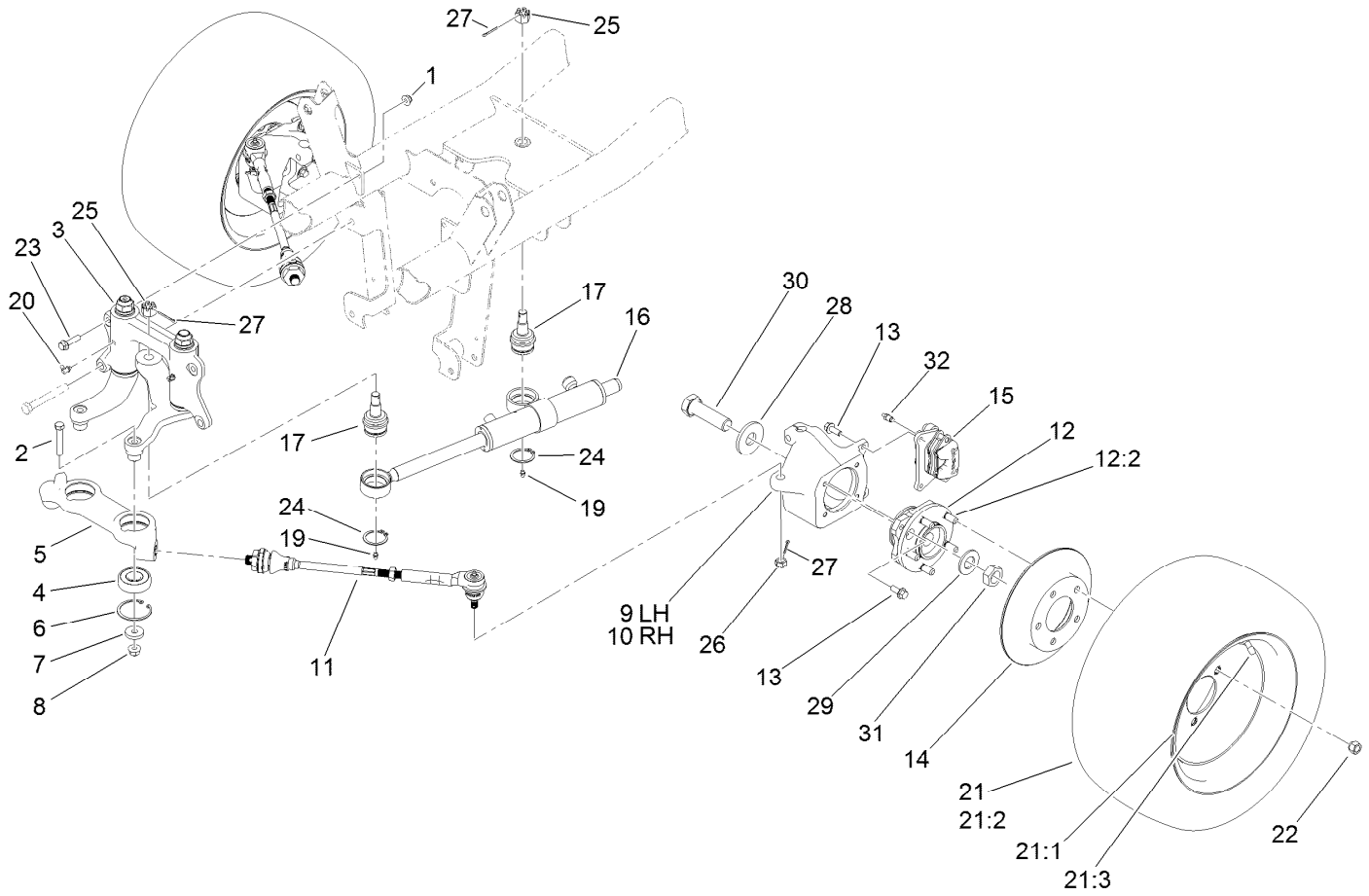


# Steering and Front Wheel Assembly

| Ref. | Part Number | Qty. | Description |
|---|---|---|---|
| 1 | 104-8301 | 2 | Nut-HF, NI |
| 2 | 324-10 | 2 | Screw-HH |
| 3 | | 1 | Steering Linkage ASM ● |
| 4 | 119-9548 | 2 | Bearing-Ball |
| 5 | 114-8296 | 1 | Link-Center |
| 6 | 32120-22 | 2 | Ring-Snap, Internal |
| 7 | 112843 | 2 | Washer |
| 8 | 114-8417 | 2 | Nut-HF, NI |
| 9 | 119-9513 | 1 | Knuckle-LH |
| 10 | 119-9514 | 1 | Knuckle-RH |
| 11 | 114-8356 | 2 | Tie Rod ASM |
| 12 | 121-9751 | 2 | Hub-Bearing, Wheel |
| 12:2 | 121-9752 | 5 | Stud-Wheel |
| 13 | 3234-11 | 12 | Screw-HHF |
| 14 | 114-8351 | 2 | Rotor-Brake |
| 15 | 119-9535 | 2 | Brake Caliper ASM |
| 16 | 112-3217 | 1 | HYD Cylinder ASM |
| 17 | 106-6774 | 2 | Joint-Ball |

| Ref. | Part Number | Qty. | Description |
|---|---|---|---|
| 19 | 302-5 | 2 | Fitting-Grease |
| 20 | 302-60 | 2 | Fitting-Grease |
| 21 | 120-4902 | 2 | Tire And Wheel ASM |
| 21:1 | 120-4901 | 1 | Wheel |
| 21:2 | 114-8273 | 1 | Tire |
| 21:3 | 232-27 | 1 | Stem-Valve |
| 22 | 242-50 | 10 | Nut-Lug |
| 23 | 114-4681 | 2 | Screw-HHF |
| 24 | 32151-104 | 2 | Ring-Retaining, External |
| 25 | 32136-14 | 2 | Nut-Hst |
| 26 | 32136-3 | 2 | Nut-SHH |
| 27 | 3272-12 | 4 | Pin-Cotter |
| 28 | 104-0719 | 2 | Washer-Hardened |
| 29 | 3256-62 | 2 | Washer-Flat |
| 30 | 115-2173 | 2 | Screw-HH |
| 31 | 3296-49 | 2 | Nut-Lock, NI |
| 32 | 119-9509 | 2 | Screw-Bleed |

● Not serviced separately

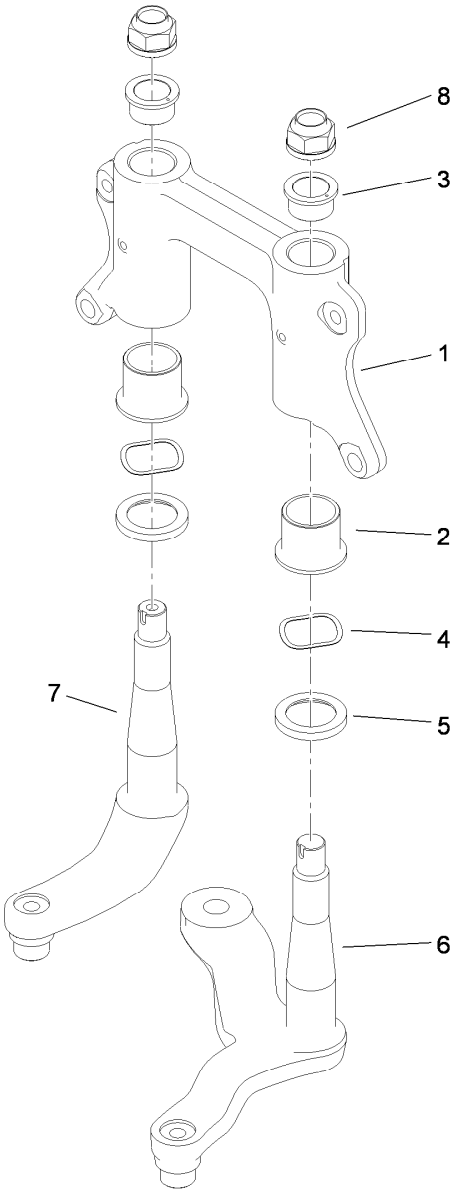


# Steering Linkage Assembly

| *Ref.* | *Part Number* | *Qty.* | *Description* |
|---|---|---|---|
| 1 | 114-8389 | 1 | Mount-Pivot |
| 2 | 69-6470 | 2 | Bushing-Castor |
| 3 | 112-1626 | 2 | Bushing-Flange |
| 4 | 93-4632 | 2 | Washer-Wavey |
| 5 | 86-6560 | 2 | Washer-Thrust |
| 6 | 114-8256 | 1 | Arm-Pitman |
| 7 | 114-8298 | 1 | Arm-Idler |
| 8 | 115-2164 | 2 | Nut-Spindle |

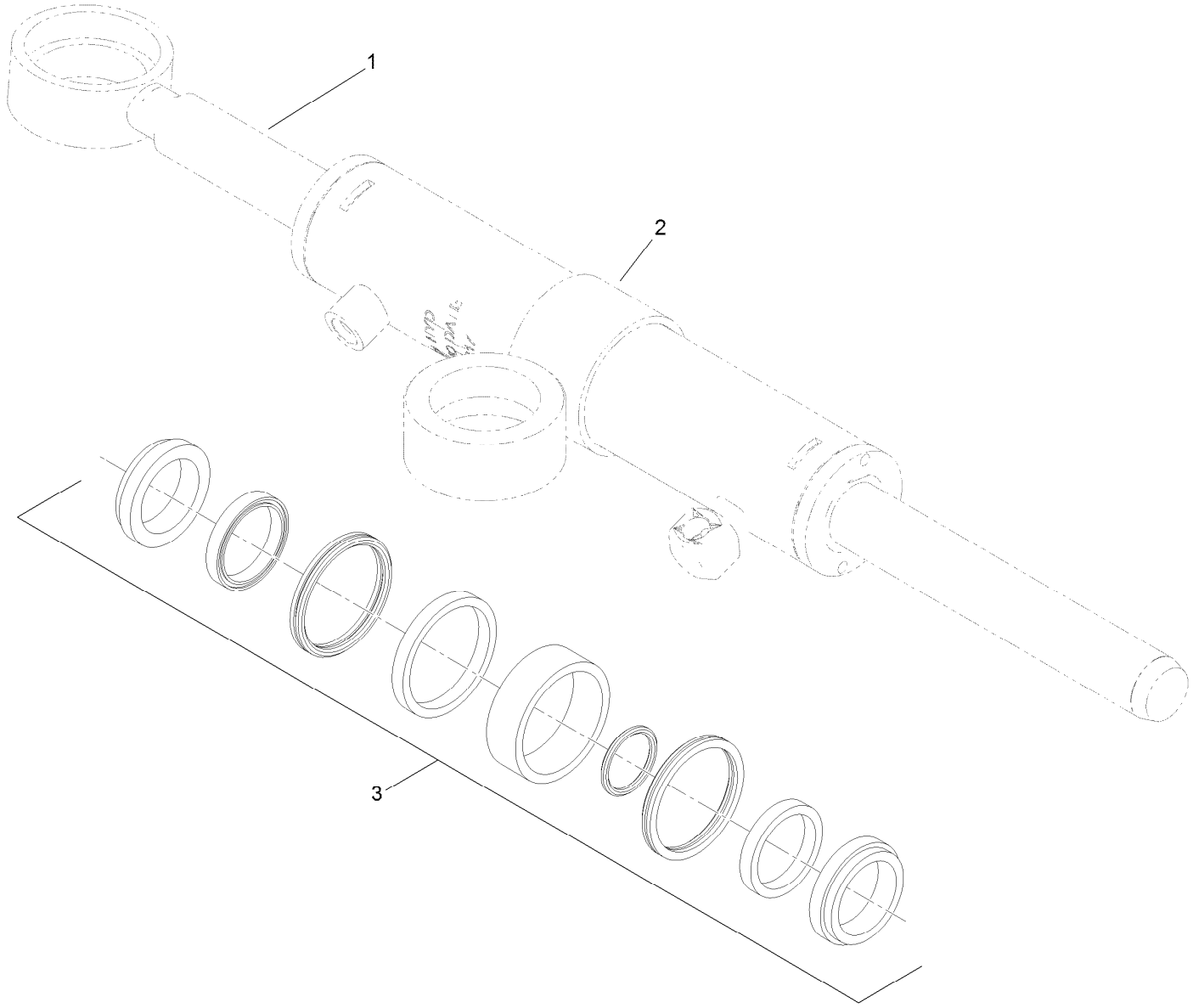


# Hydraulic Cylinder Assembly No. 112-3217

| Ref. | Part Number | Qty. | Description |
|---|---|---|---|
| 1 | | 1 | Rod-Cylinder ● |
| 2 | | 1 | Body-Cylinder ● |
| 3 | 115-2160 | 1 | Cylinder Repair Kit |

● Not serviced separately

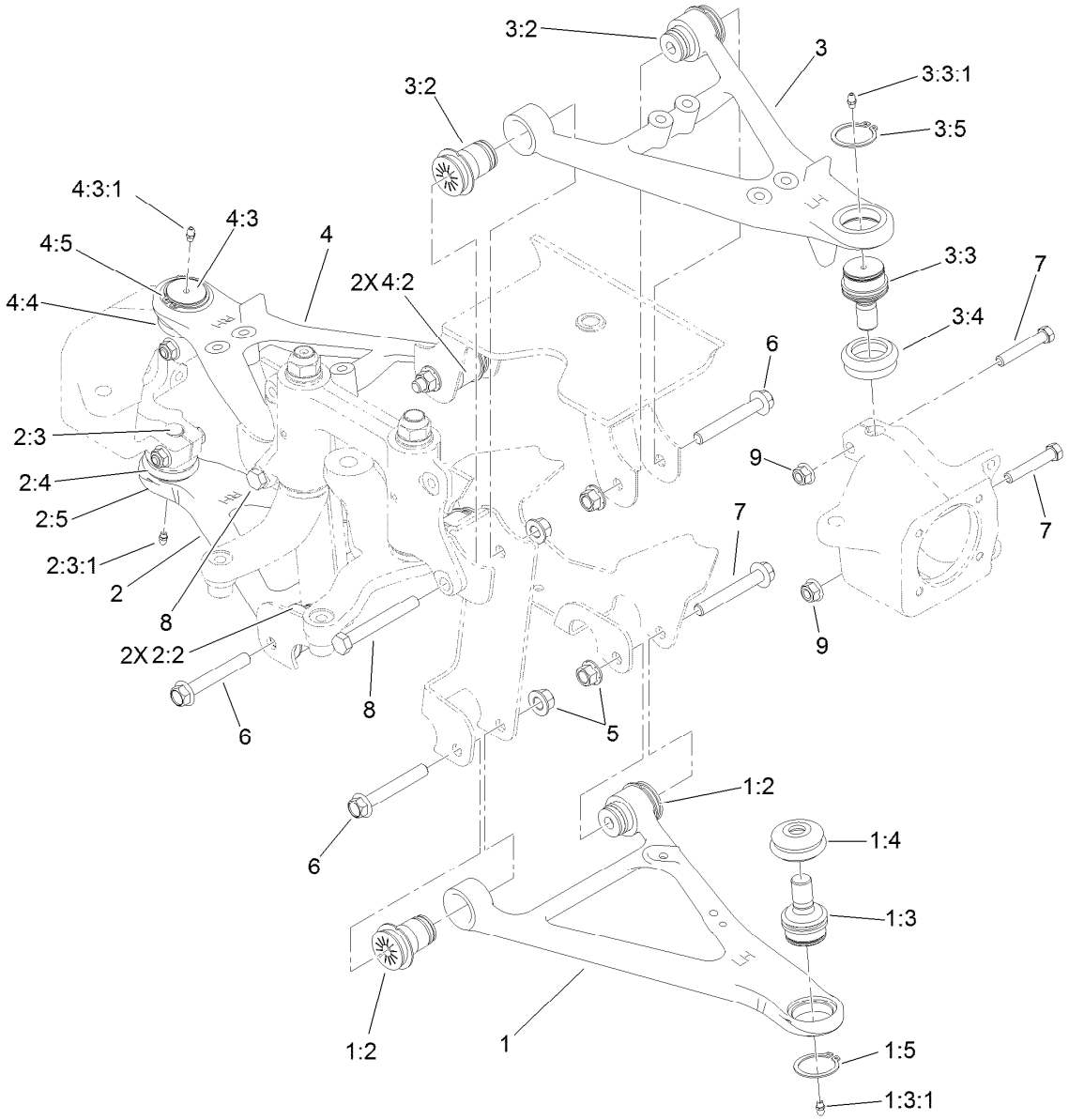


# Front Control Arm Assembly

| Ref. | Part Number | Qty. | Description |
|---|---|---|---|
| 1 | 115-2405 | 1 | Lower LH Control Arm ASM |
| 1:2 | 87-1450 | 2 | Bushing-Flange |
| 1:3 | 115-2165 | 1 | Ball Joint |
| 1:3:1 | 302-5 | 1 | Fitting-Grease |
| 1:4 | 87-2420 | 1 | Seal-Joint, Ball |
| 1:5 | 32151-104 | 1 | Ring-Retaining, External |
| 2 | 115-2407 | 1 | Lower RH Control Arm ASM |
| 2:2 | 87-1450 | 2 | Bushing-Flange |
| 2:3 | 115-2165 | 1 | Ball Joint |
| 2:3:1 | 302-5 | 1 | Fitting-Grease |
| 2:4 | 87-2420 | 1 | Seal-Joint, Ball |
| 2:5 | 32151-104 | 1 | Ring-Retaining, External |
| 3 | 115-2404 | 1 | Upper LH Control Arm ASM |
| 3:2 | 87-1450 | 2 | Bushing-Flange |
| 3:3 | 115-2165 | 1 | Ball Joint |

| Ref. | Part Number | Qty. | Description |
|---|---|---|---|
| 3:3:1 | 302-5 | 1 | Fitting-Grease |
| 3:4 | 87-2420 | 1 | Seal-Joint, Ball |
| 3:5 | 32151-104 | 1 | Ring-Retaining, External |
| 4 | 115-2406 | 1 | Upper RH Control Arm ASM |
| 4:2 | 87-1450 | 2 | Bushing-Flange |
| 4:3 | 115-2165 | 1 | Ball Joint |
| 4:3:1 | 302-5 | 1 | Fitting-Grease |
| 4:4 | 87-2420 | 1 | Seal-Joint, Ball |
| 4:5 | 32151-104 | 1 | Ring-Retaining, External |
| 5 | 99-5107 | 8 | Nut-Lock |
| 6 | 114-8419 | 6 | Screw-HHF |
| 7 | 324-10 | 4 | Screw-HH |
| 8 | 325-17 | 2 | Screw-HH |
| 9 | 114-8417 | 4 | Nut-HF, NI |

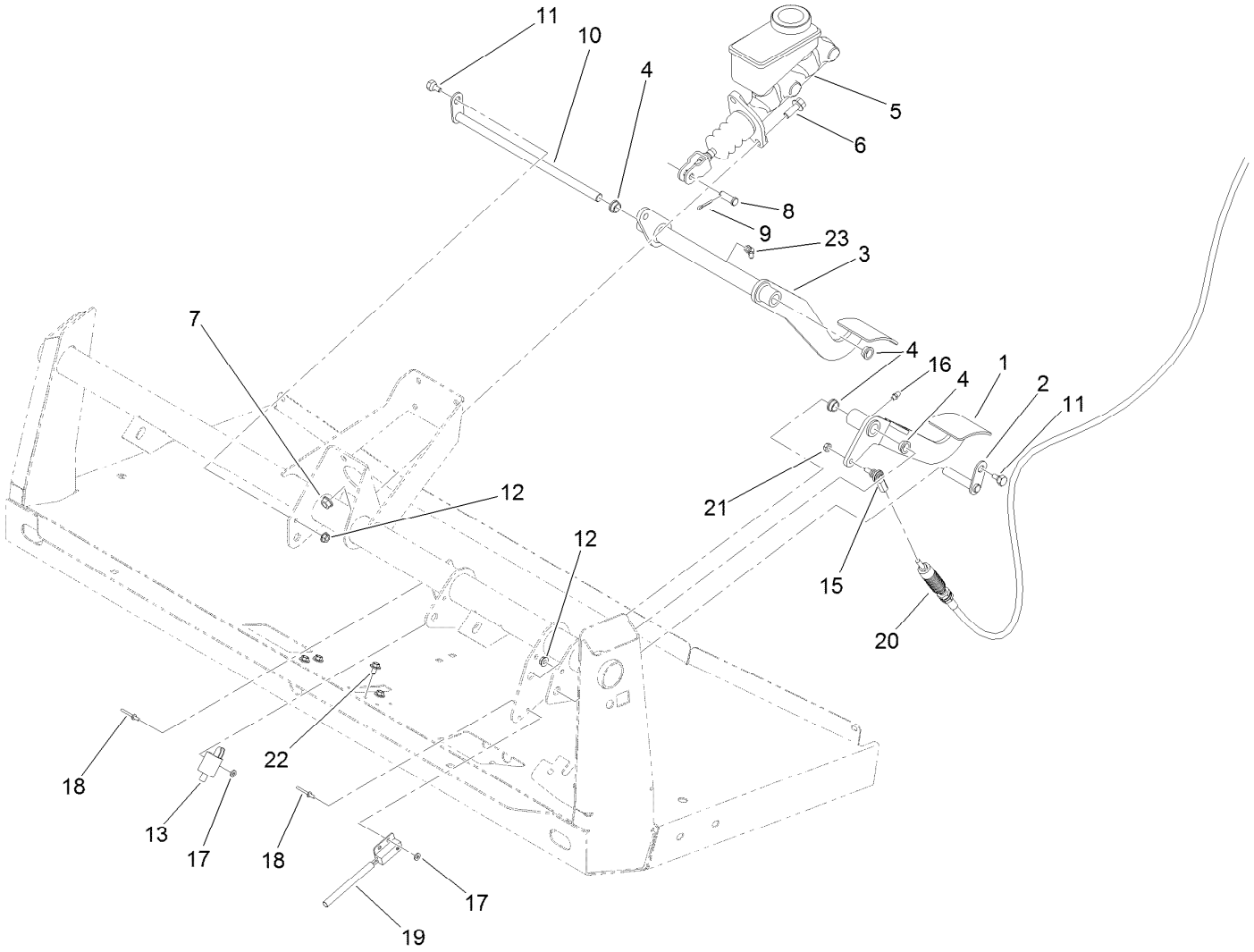


# Brake and Clutch Pedal Assembly

| Ref. | Part Number | Qty. | Description |
|---|---|---|---|
| 1 | 127-7357-03 | 1 | Pedal-Clutch |
| 2 | 115-2269 | 1 | Pin-Pivot |
| 3 | 120-5023-03 | 1 | Pedal-Brake |
| 4 | 256-156 | 4 | Bushing-Flange |
| 5 | 104-6782 | 1 | Master Cylinder ASM |
| 6 | 3234-11 | 2 | Screw-HHF |
| 7 | 3290-357 | 2 | Nut-HHF, Whiz |
| 8 | 283-2 | 1 | Pin-Clevis |
| 9 | 3272-10 | 1 | Pin-Cotter |
| 10 | 106-2475 | 1 | Shaft-Brake |
| 11 | 63-3410 | 2 | Screw-Shoulder |

| Ref. | Part Number | Qty. | Description |
|---|---|---|---|
| 12 | 32128-33 | 2 | Nut-HF |
| 13 | 95-1653 | 1 | Switch-Pole, Single |
| 15 | 110-2554 | 1 | Rod End-Spherical |
| 16 | 302-5 | 1 | Fitting-Grease |
| 17 | 3256-21 | 4 | Washer-Flat |
| 18 | 3269-25 | 4 | Rivet-Pop |
| 19 | 105-0023 | 1 | Switch-Proximity |
| 20 | 115-2284 | 1 | Cable-Clutch |
| 21 | 3296-13 | 1 | Nut-Lock, NI |
| 22 | 46-6810 | 4 | Screw And Washer ASM |
| 23 | 302-60 | 1 | Fitting-Grease |

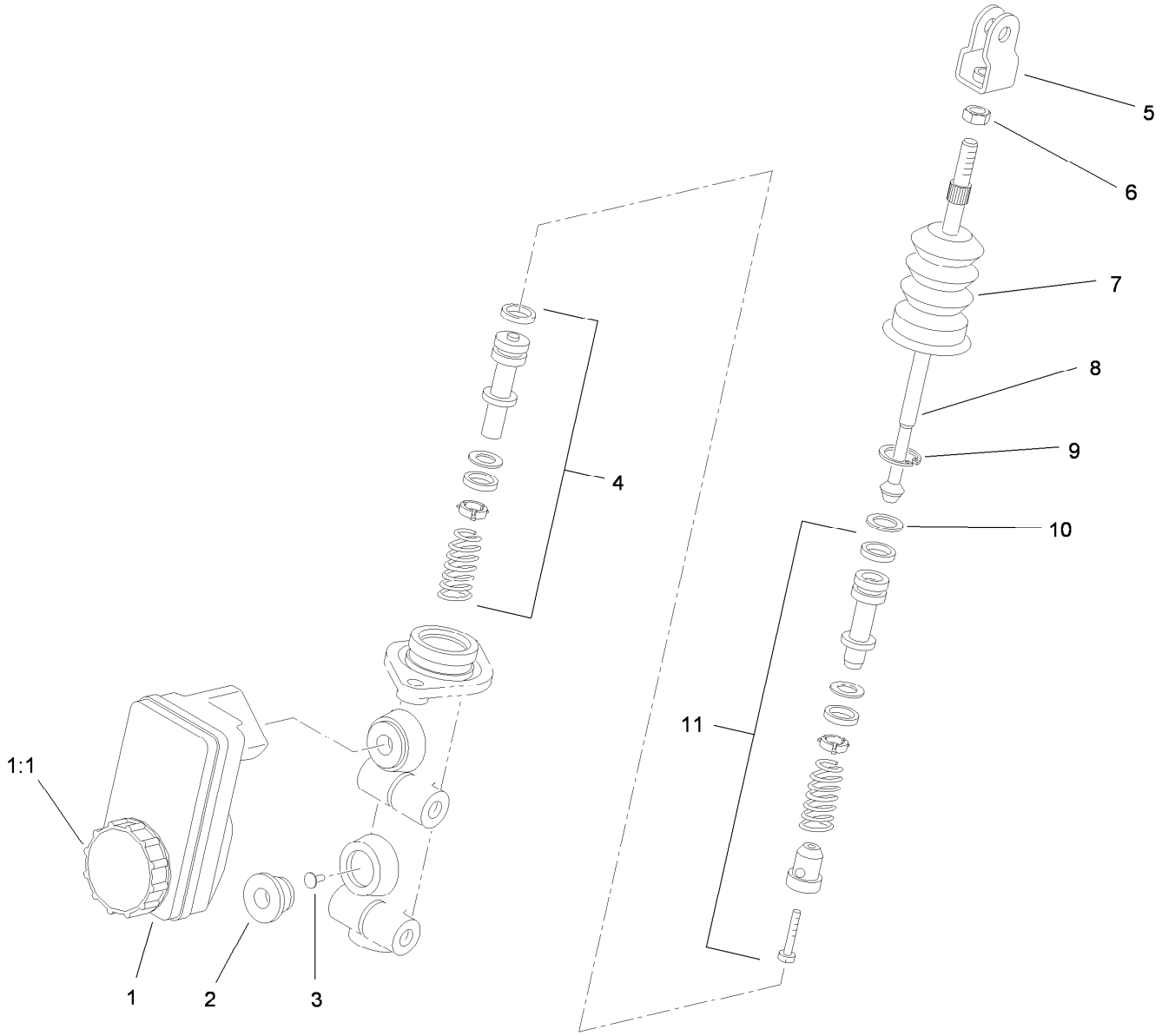


# Master Cylinder Assembly No. 104-6782

| *Ref.* | *Part Number* | *Qty.* | *Description* |
|---|---|---|---|
| 1 | 104-6845 | 1 | Reservoir ASM |
| 1:1 | 92-4112 | 1 | Cap ASM |
| 2 | 93-8971 | 2 | Seal-Port, Flange |
| 3 | 92-4103 | 1 | Pin-Stop |
| 4 | 92-4102 | 1 | Secondary Piston ASM |
| 5 | 92-4110 | 1 | Clevis |
| 6 | 21-0360 | 1 | Nut-Hex |
| 7 | 94-5209 | 1 | Cover-Dust |
| 8 | 94-5210 | 1 | Rod-Push |
| 9 | 92-4109 | 1 | Ring-Snap |
| 10 | 92-4108 | 1 | Retainer-Washer |
| 11 | 92-4101 | 1 | Primary Piston ASM |

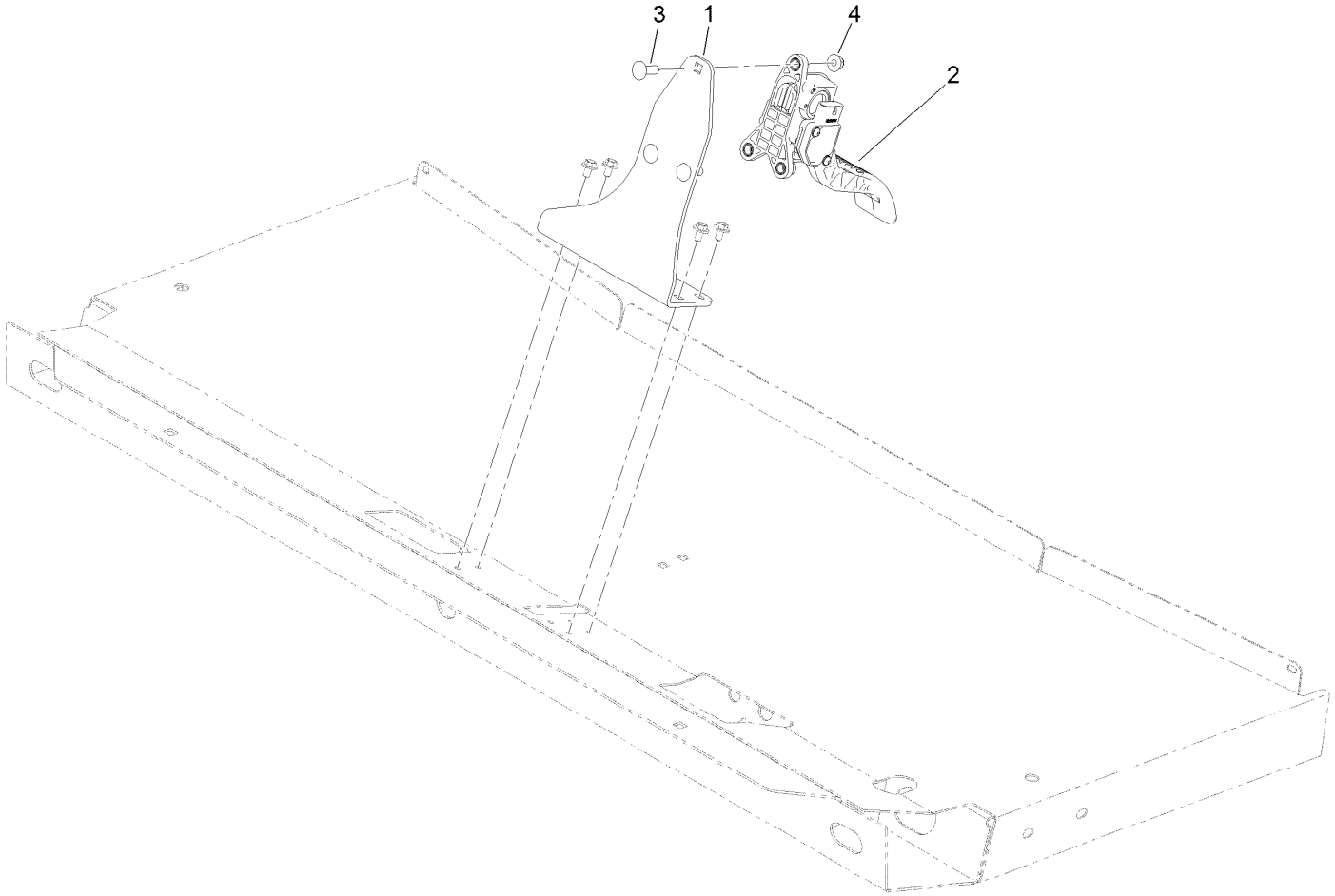


# Accelerator Assembly

| Ref. | Part Number | Qty. | Description |
|---|---|---|---|
| 1 | 121-9668-03 | 1 | Bracket-Mount, Pedal |
| 2 | 121-9675 | 1 | Pedal-Accelerator |
| 3 | 3230-22 | 3 | Screw-CARR |
| 4 | 104-8300 | 3 | Nut-HF, NI |

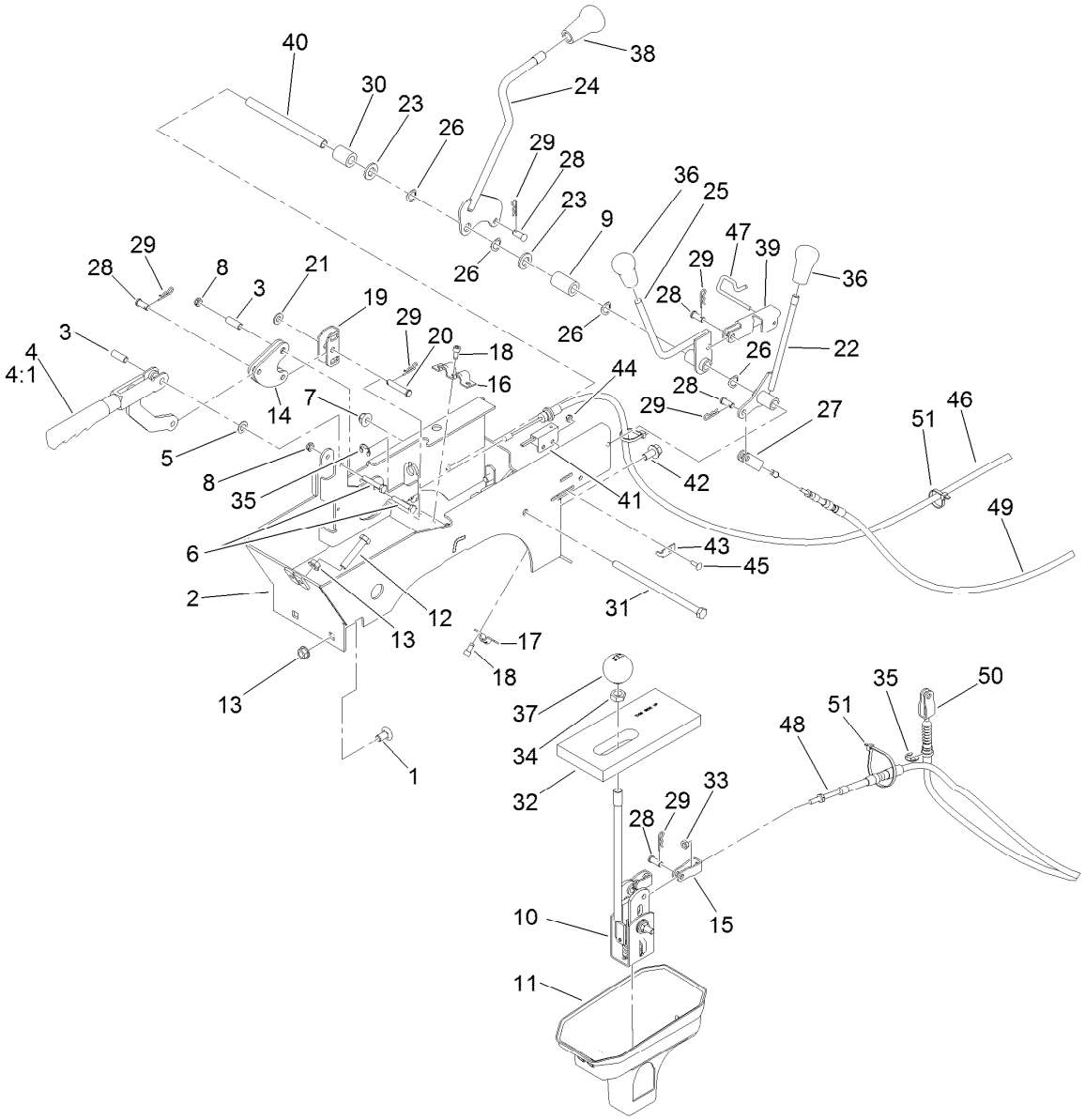


# Console Assembly

| Ref. | Part Number | Qty. | Description |
|---|---|---|---|
| 1 | 3231-21 | 2 | Screw-CARR |
| 2 | 108-6914-03 | 1 | Support-Lever |
| 3 | 114402 | 2 | Spacer |
| 4 | 104-6842 | 1 | Lever-Brake, Park |
| 4:1 | 106-7972 | 1 | Grip-Handle |
| 5 | 3290-477 | 1 | Washer-Curved |
| 6 | 321-9 | 2 | Screw-HH |
| 7 | 104-8301 | 1 | Nut-HF, NI |
| 8 | 3296-56 | 2 | Nut-Lock, NI |
| 9 | 120-5037 | 1 | Spacer |
| 10 | 106-7887 | 1 | Shift ASM |
| 11 | 106-2376 | 1 | Boot-Shift, Lower |
| 12 | 323-10 | 2 | Screw-HH |
| 13 | 3290-357 | 4 | Nut-HHF, Whiz |
| 14 | 106-7814 | 2 | Bellcrank |
| 15 | 87-2310 | 2 | Clevis-Cable |
| 16 | 87-4960 | 1 | Clamp-Cable |
| 17 | 87-4340 | 1 | Clamp-Cable |
| 18 | 65-5220 | 5 | Screw-HSH, Thread Forming |
| 19 | 87-3480 | 1 | Bracket-Equalizer, Cable |
| 20 | 94-3829 | 1 | Pin-Clevis |
| 21 | 3256-23 | 1 | Washer-Plain |
| 22 | 106-7828 | 1 | Lever |
| 23 | 33096-00 | 2 | Washer-Flat |
| 24 | 112-3008 | 1 | Lever-Lock, Differential |
| 25 | 106-7960 | 1 | Lever-HYD |
| 26 | 3290-221 | 4 | Washer-Spring |
| 27 | 87-7160 | 1 | Clevis-Cable |
| 28 | 283-62 | 6 | Pin-Clevis |
| 29 | 3290-307 | 7 | Pin-Cotter |
| 30 | 66-6501 | 1 | Spacer-Wheel |
| 31 | 323-36 | 1 | Screw-HH |
| 32 | 87-6570 | 1 | Seal-Boot, Lower |
| 33 | 3220-1 | 2 | Nut-Jam |
| 34 | 3218-18 | 1 | Nut-Jam |
| 35 | 32120-47 | 3 | Ring-Retaining, External |
| 36 | 106-7903 | 2 | Knob-Control |
| 37 | 87-6720 | 1 | Knob-Shift |
| 38 | 106-7952 | 1 | Knob |
| 39 | 115-2250 | 1 | Link |
| 40 | 106-7833 | 1 | Spacer |

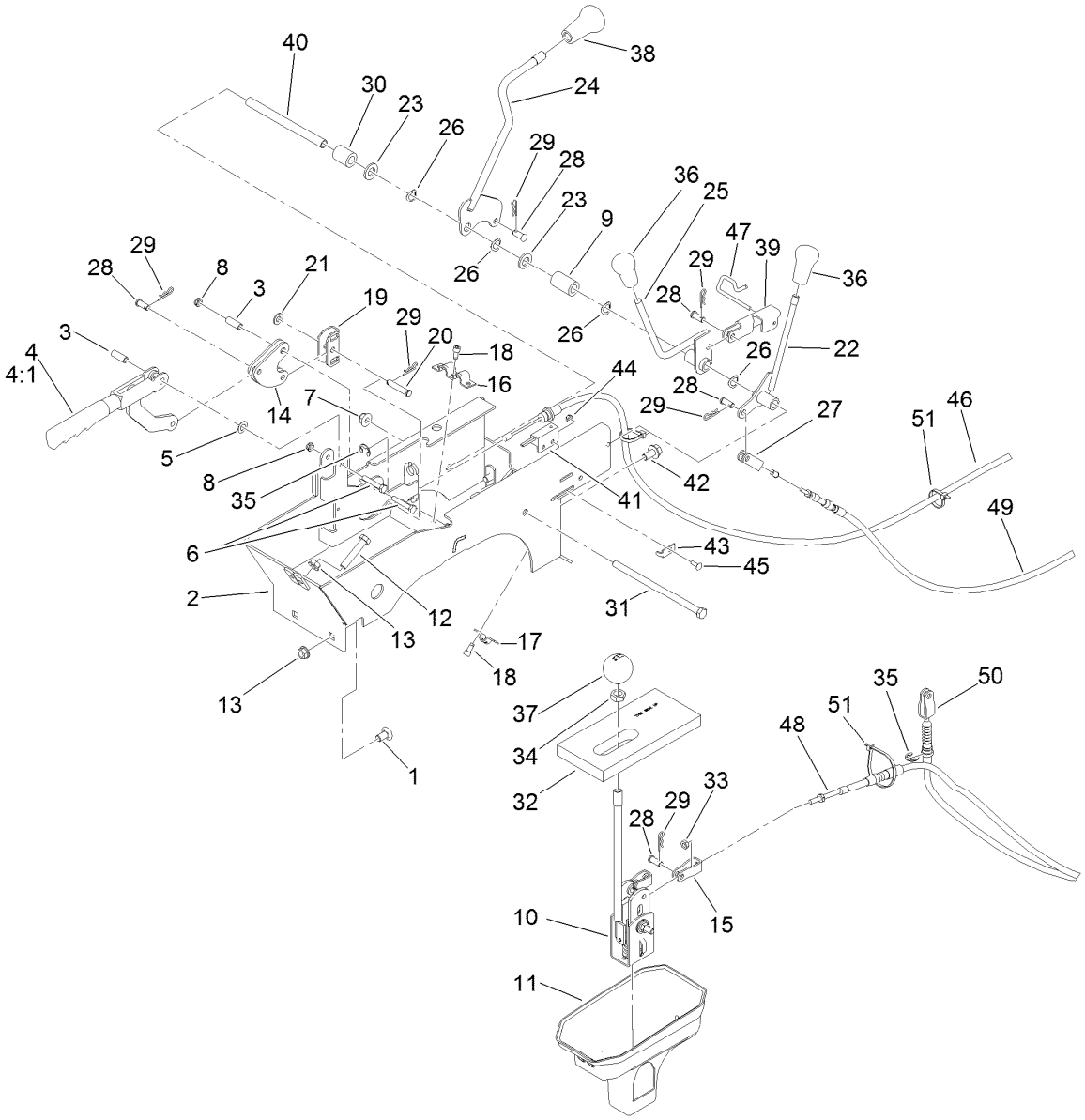


# Console Assembly (continued)

| Ref. | Part Number | Qty. | Description |
|---|---|---|---|
| 41 | 100-1270 | 1 | Switch-Proximity |
| 42 | 3234-12 | 2 | Screw-HHF |
| 43 | 100-4872 | 1 | Plate-Switch, Neutral |
| 44 | 3296-12 | 1 | Nut-Lock, NI |
| 45 | 3229-34 | 1 | Screw-CARR |
| 46 | 115-2283 | 2 | Cable-Brake, Park |

| Ref. | Part Number | Qty. | Description |
|---|---|---|---|
| 47 | 115-2350 | 1 | Pin-Retainer |
| 48 | 121-6327 | 2 | Cable-Selector, Gear |
| 49 | 115-7812 | 1 | Cable-Hi Low |
| 50 | 115-2287 | 1 | Cable-Lock, Differential |
| 51 | 3290-379 | 5 | Tie-Cable |

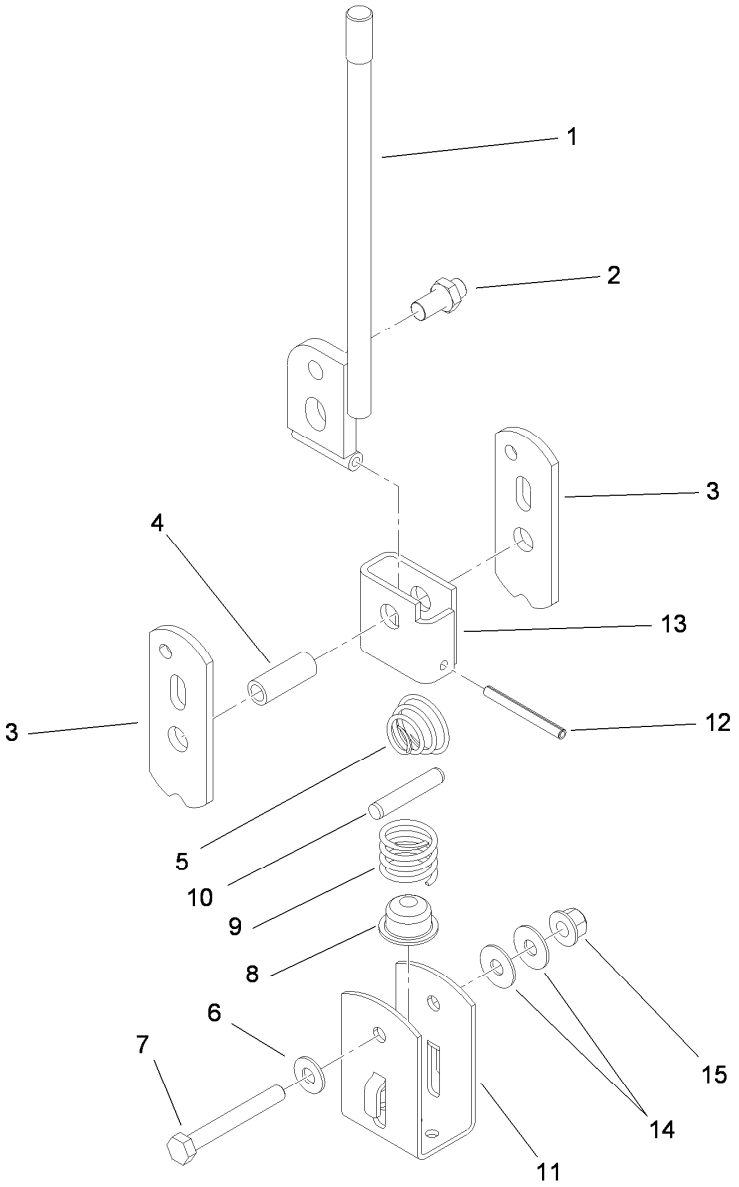


# Shift Assembly No. 106-7887

| Ref. | Part Number | Qty. | Description |
|---|---|---|---|
| 1 | 87-2040 | 1 | Lever-Shift |
| 2 | 87-3650 | 1 | Pin-Shift |
| 3 | 87-3540 | 2 | Link-Shift |
| 4 | 87-2520 | 1 | Tube-Pivot |
| 5 | 87-2900 | 1 | Spring-Compression |
| 6 | 87-8640 | 1 | Washer-Flat |
| 7 | 322-12 | 1 | Screw-HH |
| 8 | 87-3530 | 1 | Button-Shifter |
| 9 | 87-3660 | 1 | Spring-Compression |
| 10 | 3290-507 | 1 | Pin-Dowel |
| 11 | 87-3520 | 1 | Clevis |
| 12 | 32121-48 | 1 | Pin-Spring |
| 13 | 87-6040 | 1 | Bracket-Shifter |
| 14 | 3290-456 | 2 | Washer-Belleville |
| 15 | 104-8300 | 1 | Nut-HF, NI |

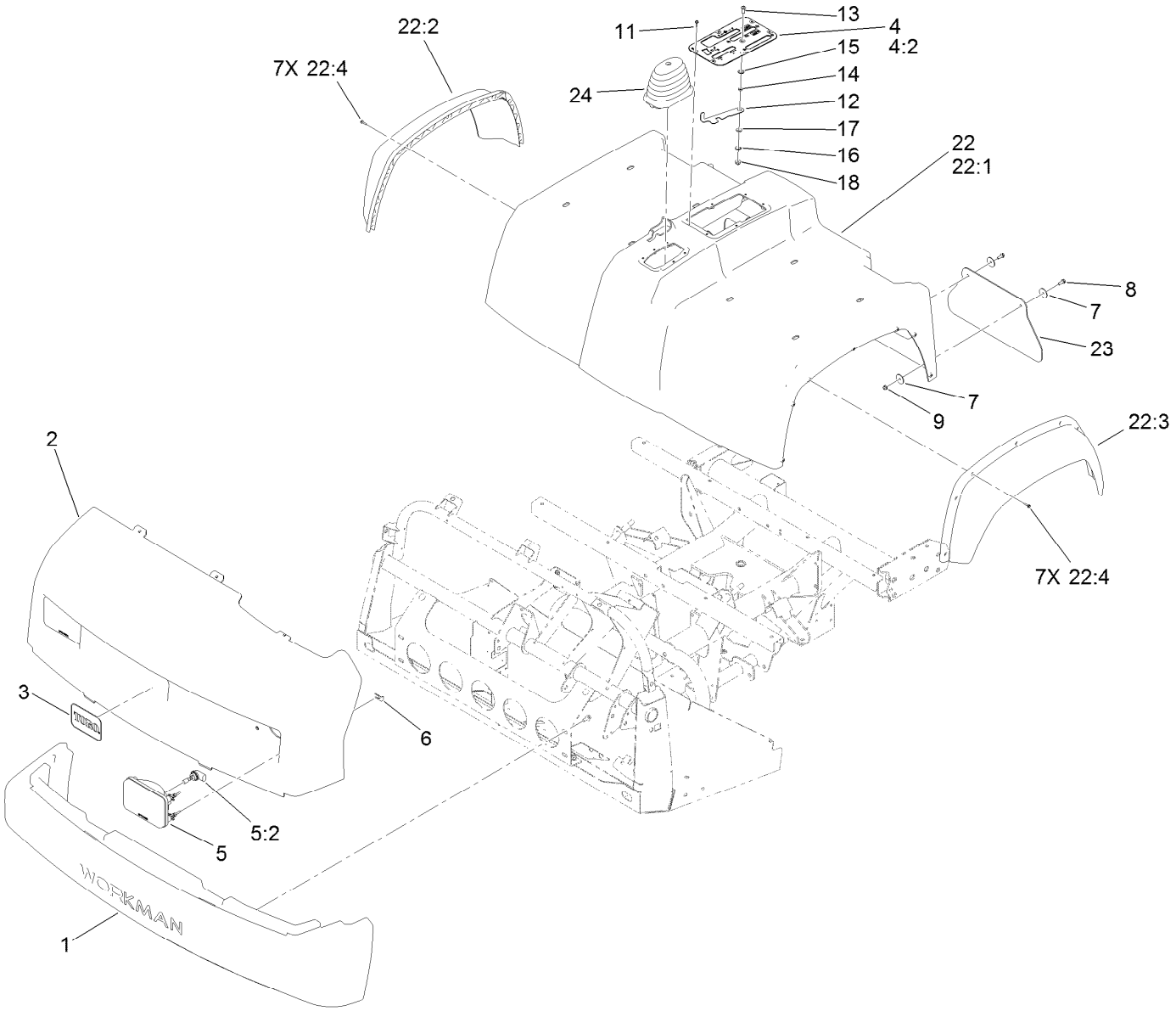


# Bumper, Hood and Seat Base Assembly

| Ref. | Part Number | Qty. | Description |
|---|---|---|---|
| 1 | 112-3185 | 1 | Bumper |
| 2 | 112-3183 | 1 | Hood |
| 3 | 117-4950 | 1 | Decal |
| 4 | 106-7886 | 1 | Control Plate ASM |
| 4:2 | 106-2377 | 1 | Decal-Console |
| 5 | 114-8322 | 2 | Headlight ASM |
| 5:2 | 115-2395 | 1 | Bulb-Light |
| 6 | 114-8341 | 6 | Clip-Speed |
| 7 | 3256-55 | 8 | Washer-Flat |
| 8 | 3234-4 | 4 | Screw-HHF |
| 9 | 104-7201 | 4 | Nut-HF |
| 11 | 98-1375 | 6 | Screw-HWH |
| 12 | 106-7984 | 1 | Lever-Detent |

| Ref. | Part Number | Qty. | Description |
|---|---|---|---|
| 13 | 3274-55 | 1 | Screw-HSBH |
| 14 | 82-4240 | 1 | Spacer-Bearing |
| 15 | 94-8196 | 1 | Washer-Nylon |
| 16 | 3290-221 | 1 | Washer-Spring |
| 17 | 3256-23 | 1 | Washer-Plain |
| 18 | 104-8300 | 1 | Nut-HF, NI |
| 22 | 115-7815 | 1 | Seat Base ASM |
| 22:1 | | 1 | Base-Seat ● |
| 22:2 | 114-8407 | 1 | Fender-Front, RH |
| 22:3 | 114-8408 | 1 | Fender-Front, LH |
| 22:4 | 117-5036 | 14 | Screw-HWH |
| 23 | 106-2378 | 2 | Mudflap |
| 24 | 117-8063 | 1 | Boot-Shift |

● Not serviced separately

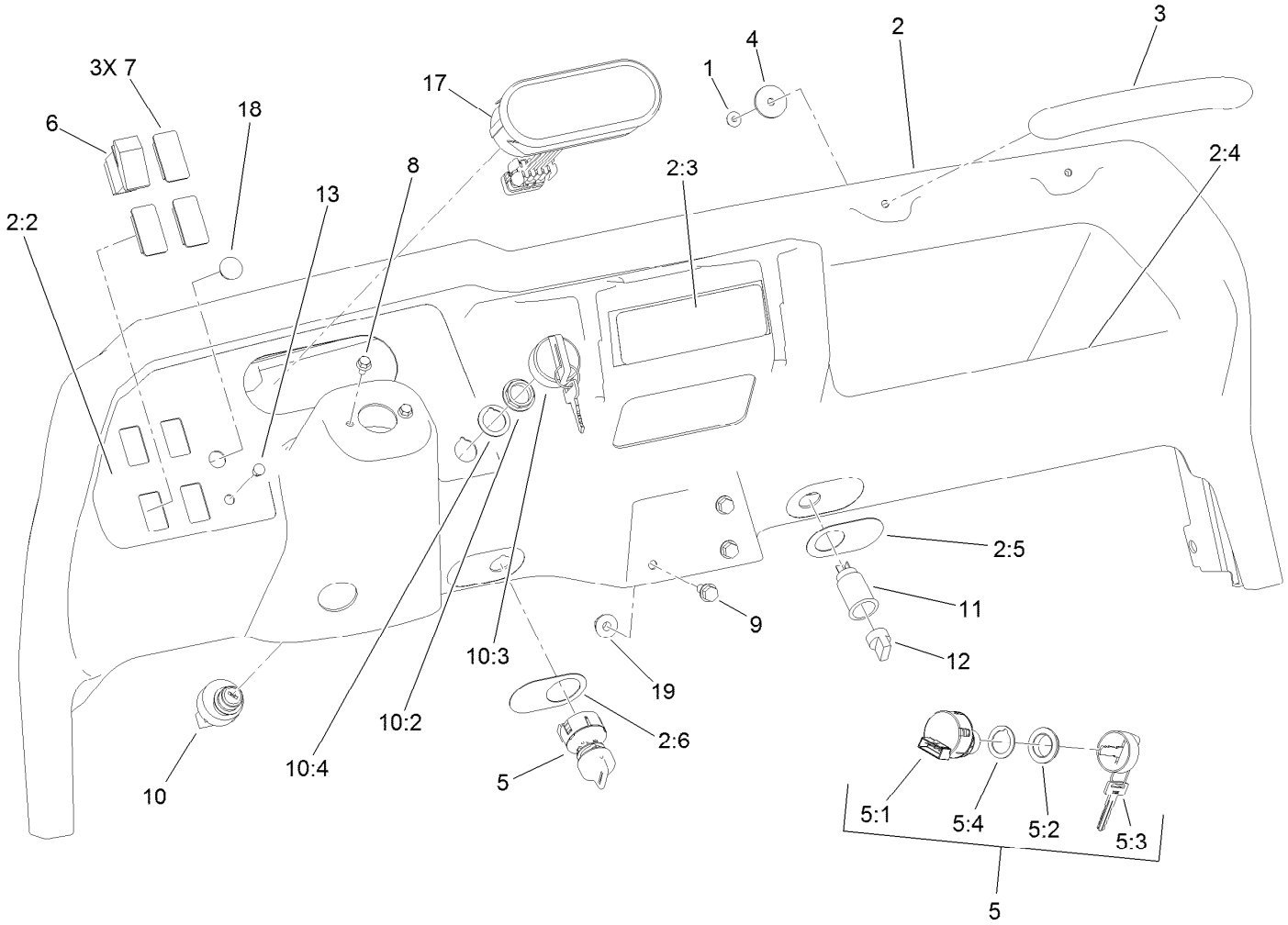


# Dash Assembly

| Ref. | Part Number | Qty. | Description |
|---|---|---|---|
| 1 | 104-7201 | 2 | Nut-HF |
| 2 | 115-7912 | 1 | Dash ASM |
| 2:2 | 115-2281 | 1 | Decal-Dash |
| 2:3 | 115-7746 | 1 | Decal-Danger |
| 2:4 | 115-2282 | 1 | Decal-Warning, Dash |
| 2:5 | 106-2353 | 1 | Decal-Powerpoint |
| 2:6 | 106-2355 | 1 | Decal-Switch, Supervisor |
| 3 | 117-4948 | 1 | Handle-Grab |
| 4 | 103995 | 2 | Washer |
| 5 | 110-2580 | 1 | Switch-Key, Supervisor |
| 5:1 | | 1 | Switch-Key ● |
| 5:2 | 108-8660 | 1 | Nut-Mounting |
| 5:3 | 110-5221 | 1 | Set-Key, Supervisor |
| 5:4 | 108-8659 | 1 | Washer-Backup |

| Ref. | Part Number | Qty. | Description |
|---|---|---|---|
| 6 | 95-8999 | 1 | Switch |
| 7 | 99-7420 | 3 | Plug-Hole |
| 8 | 33103-012 | 2 | Screw-HHF |
| 9 | 3234-5 | 3 | Screw-HHF |
| 10 | 106-5269 | 1 | Ignition Switch ASM |
| 10:2 | 108-8660 | 1 | Nut-Mounting |
| 10:3 | 106-5270 | 1 | Ignition Key Set |
| 10:4 | 108-8659 | 1 | Washer-Backup |
| 11 | 99-7411 | 1 | Point-Power |
| 12 | 99-7416 | 1 | Cap |
| 13 | 104-9368 | 1 | Plug-Dome |
| 17 | 120-4808 | 1 | Cluster-Instrument |
| 18 | 94-5627 | 1 | Plug |
| 19 | 104-8300 | 3 | Nut-HF, NI |

● Not serviced separately

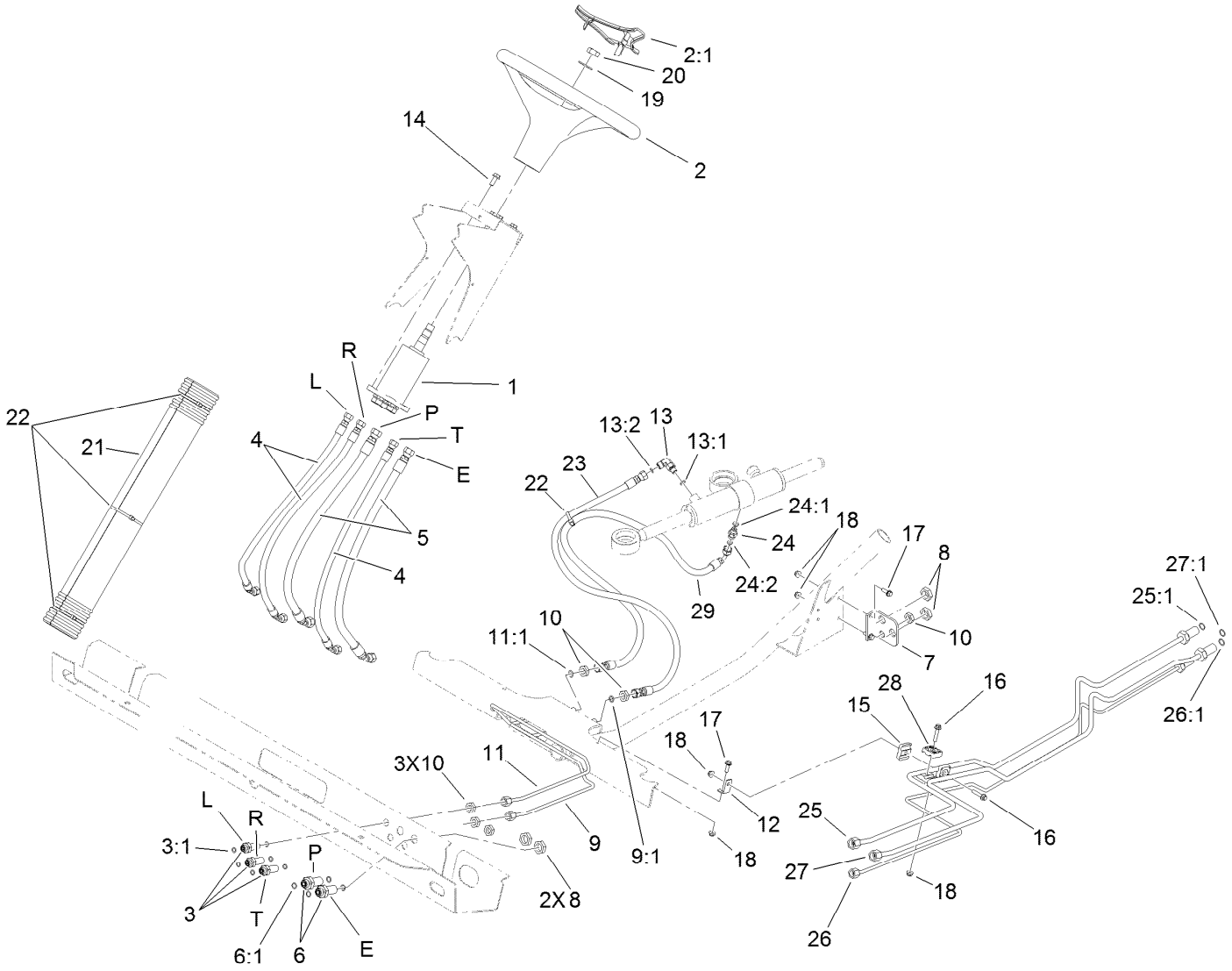


# Steering Hydraulic Assembly

| Ref. | Part Number | Qty. | Description |
|---|---|---|---|
| 1 | 120-4813 | 1 | Pump-Steering |
| 2 | 98-1471 | 1 | Wheel-Steering |
| 2:1 | 98-1468 | 1 | Cover-Wheel, Steering |
| 3 | 94-1444 | 3 | Union-Bulkhead |
| 3:1 | 237-21 | 2 | O-Ring |
| 4 | 106-7974 | 3 | Hose-HYD |
| 5 | 106-7975 | 2 | Hose-HYD |
| 6 | 340-71 | 2 | Fitting-Straight, Bulkhead |
| 6:1 | 237-22 | 2 | O-Ring |
| 7 | 106-7801-03 | 1 | Bracket-Line, Steering |
| 8 | 340-70 | 4 | Nut-Lock |
| 9 | 106-7804 | 1 | Tube-HYD |
| 9:1 | 237-21 | 1 | O-Ring |
| 10 | 3219-10 | 6 | Nut-Hex |
| 11 | 106-7806 | 1 | Tube-HYD |
| 11:1 | 237-21 | 1 | O-Ring |
| 12 | 106-7807 | 1 | Bracket-Line, Steering |
| 13 | 340-132 | 1 | Fitting-Elbow, 90 DEG |
| 13:1 | 237-78 | 1 | O-Ring |
| 13:2 | 237-21 | 1 | O-Ring |
| 14 | 98-7977 | 4 | Screw-HHF |

| Ref. | Part Number | Qty. | Description |
|---|---|---|---|
| 15 | 106-7839 | 2 | Clamp-Tube |
| 16 | 3234-21 | 2 | Screw-HHF |
| 17 | 3234-4 | 3 | Screw-HHF |
| 18 | 104-7201 | 5 | Nut-HF |
| 19 | 3256-27 | 1 | Washer-Flat |
| 20 | 3296-33 | 1 | Nut-Lock, NI |
| 21 | 106-6713 | 1 | Cover-Lines, Steering |
| 22 | 3290-379 | 4 | Tie-Cable |
| 23 | 108-6505 | 1 | Hose-HYD |
| 24 | 340-92 | 1 | Fitting-Straight |
| 24:1 | 237-78 | 1 | O-Ring |
| 24:2 | 237-21 | 1 | O-Ring |
| 25 | 115-7701 | 1 | Tube-HYD |
| 25:1 | 237-22 | 1 | O-Ring |
| 26 | 115-7702 | 1 | Tube-HYD |
| 26:1 | 237-22 | 1 | O-Ring |
| 27 | 115-7703 | 1 | Tube-HYD |
| 27:1 | 237-21 | 1 | O-Ring |
| 28 | 56-7973 | 2 | Clamp-Tube |
| 29 | 117-4861 | 1 | Hose-HYD |

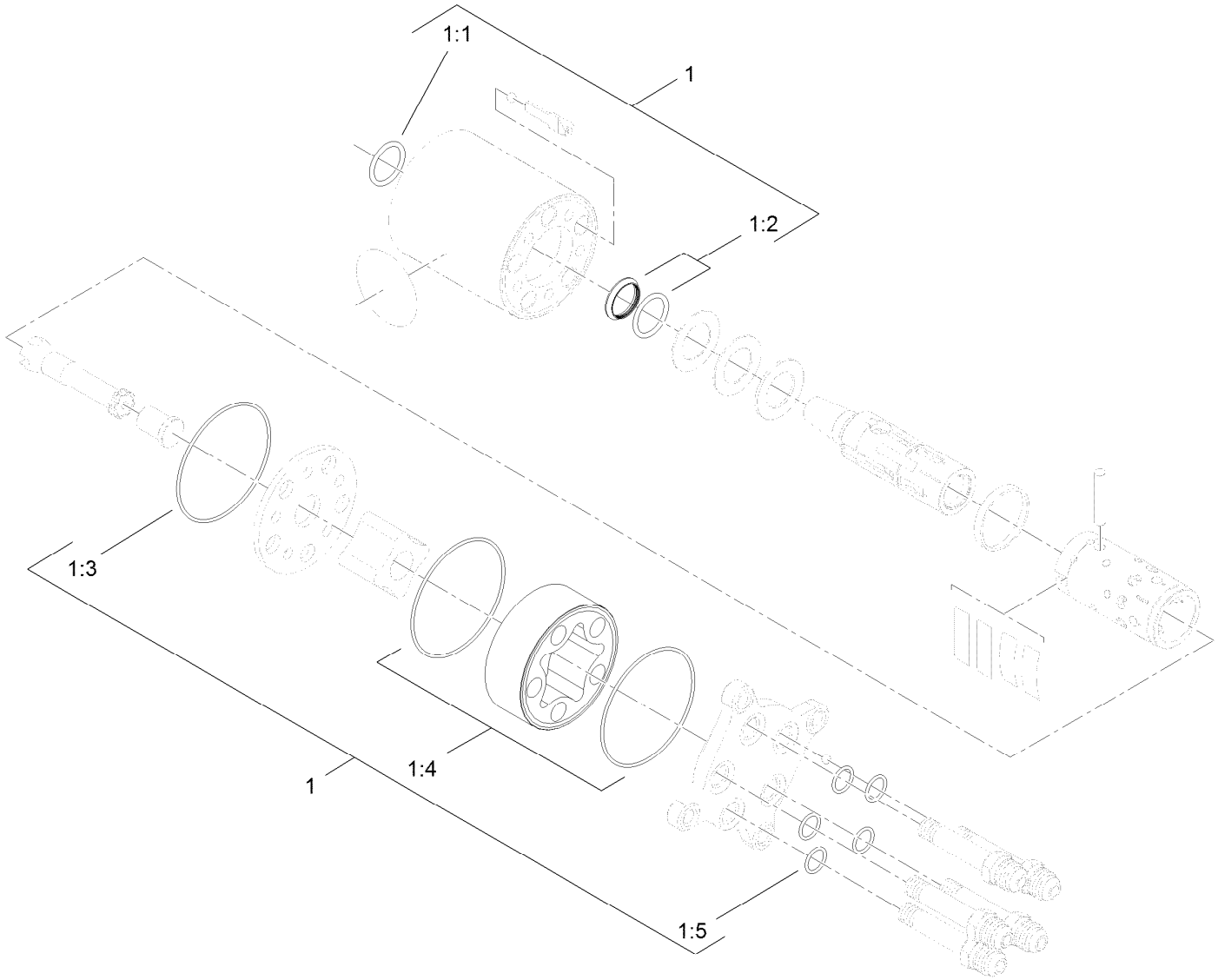


# Steering Valve Assembly No. 120-4813

| *Ref.* | *Part Number* | *Qty.* | *Description* |
|---|---|---|---|
| 1 | 106-6716 | 1 | Seal Kit |
| 1:1 | | 1 | Ring-Seal, Dust ● |
| 1:2 | | 1 | Seal-Shaft ● |
| 1:3 | | 1 | O-Ring ● |
| 1:4 | | 2 | O-Ring ● |
| 1:5 | | 5 | O-Ring ● |

● Not serviced separately

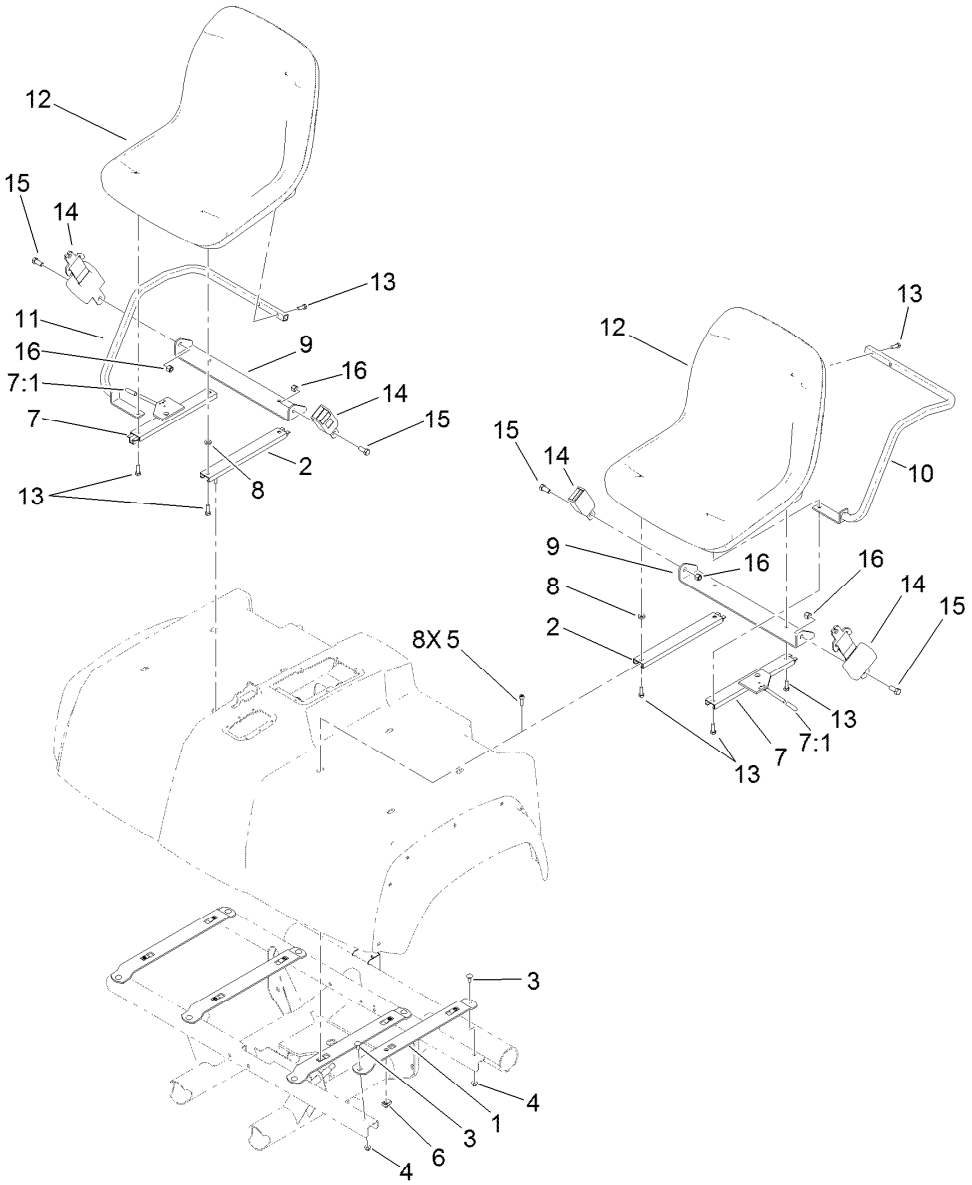


# Seat Assembly

| Ref. | Part Number | Qty. | Description |
|---|---|---|---|
| 1 | 115-2435-03 | 4 | Bracket-Seat |
| 2 | 119-0655 | 2 | Adjuster-Seat, Non Locking |
| 3 | 3230-1 | 8 | Bolt-CARR |
| 4 | 104-8300 | 8 | Nut-HF, NI |
| 5 | 3274-22 | 8 | Screw-HSH |
| 6 | 115-7721 | 8 | Nut-Clip, U |
| 7 | 121-9763 | 2 | Adjuster-Seat, Locking |
| 7:1 | 2410-49 | 1 | Cap-Vinyl |
| 8 | 104-7658 | 2 | Spacer |

| Ref. | Part Number | Qty. | Description |
|---|---|---|---|
| 9 | 119-0727-03 | 2 | Bracket-Belt, Seat |
| 10 | 119-0731-03 | 1 | Armrest-LH |
| 11 | 119-0732-03 | 1 | Armrest-RH |
| 12 | 112-2923 | 2 | Seat ASM |
| 13 | 33114-030 | 12 | Screw-HH |
| 14 | 110-0413 | 2 | Seatbelt-Retractable |
| 15 | 3212-4 | 4 | Screw-HH |
| 16 | 3296-7 | 4 | Nut-Lock |

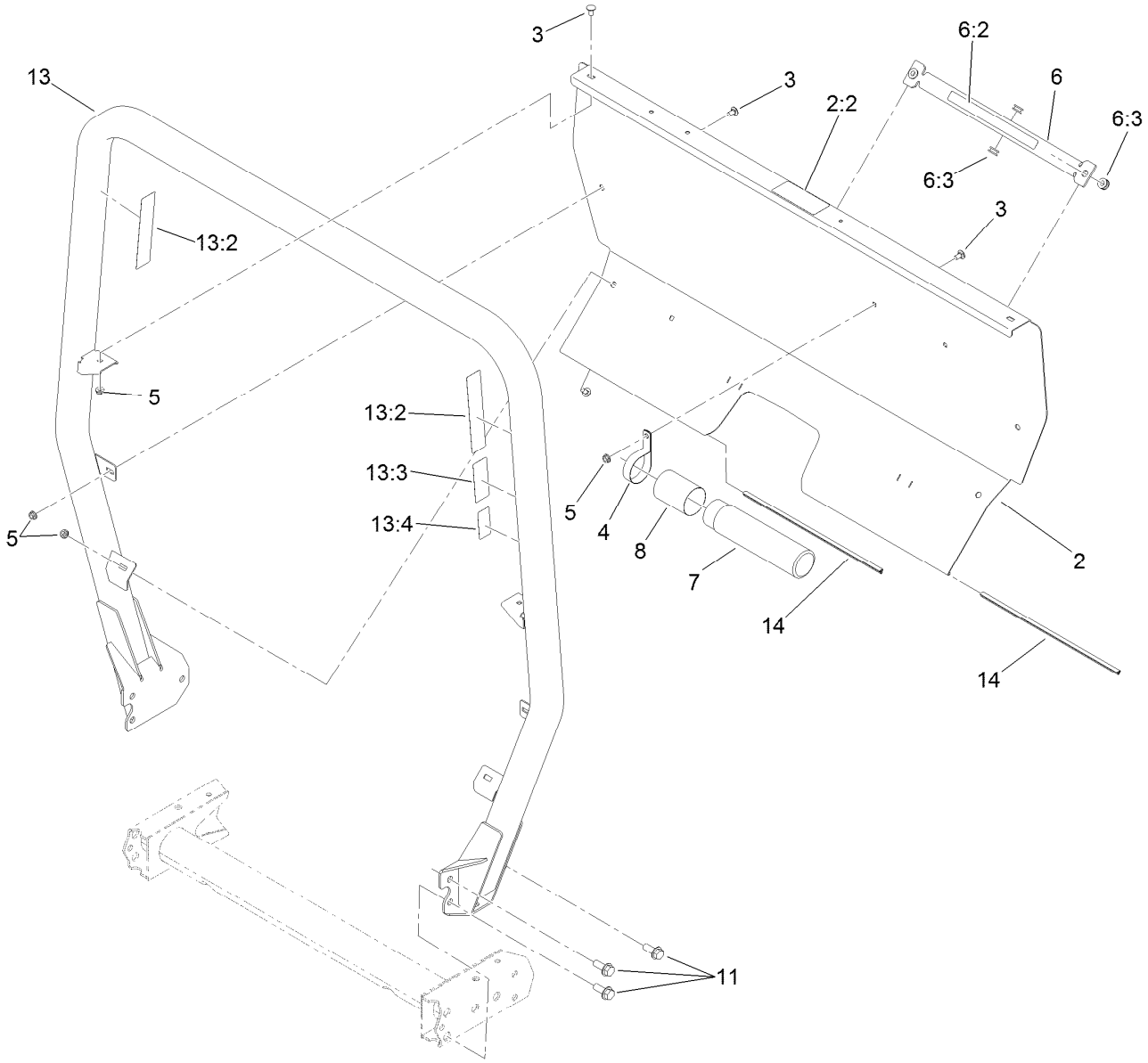


# Roll-Over Protection System Assembly

| Ref. | Part Number | Qty. | Description |
|---|---|---|---|
| 2 | 115-2213 | 1 | ROPS Cover ASM |
| 2:2 | 105-4215 | 1 | Decal-Caution |
| 3 | 3230-18 | 8 | Screw-CARR |
| 4 | 2412-133 | 2 | Clamp-R |
| 5 | 32128-20 | 8 | Nut-HF |
| 6 | 105-7960 | 1 | Bed Support ASM |
| 6:2 | 93-9852 | 1 | Decal-Warning |
| 6:3 | 92-5972 | 4 | Grommet-Rubber |

| Ref. | Part Number | Qty. | Description |
|---|---|---|---|
| 7 | 104-7050 | 1 | Tube-Manual |
| 8 | 104-7048 | 1 | Cap-Housing |
| 11 | 3234-38 | 6 | Screw-HHF |
| 13 | 115-7910 | 1 | ROPS ASM |
| 13:2 | 106-7767 | 2 | Decal-ROPS |
| 13:3 | 93-9850 | 1 | Decal-ROPS, CE |
| 13:4 | 117-4969 | 1 | Decal-ROPS, ISO |
| 14 | 121-6294 | 2 | Seal-Bulb |

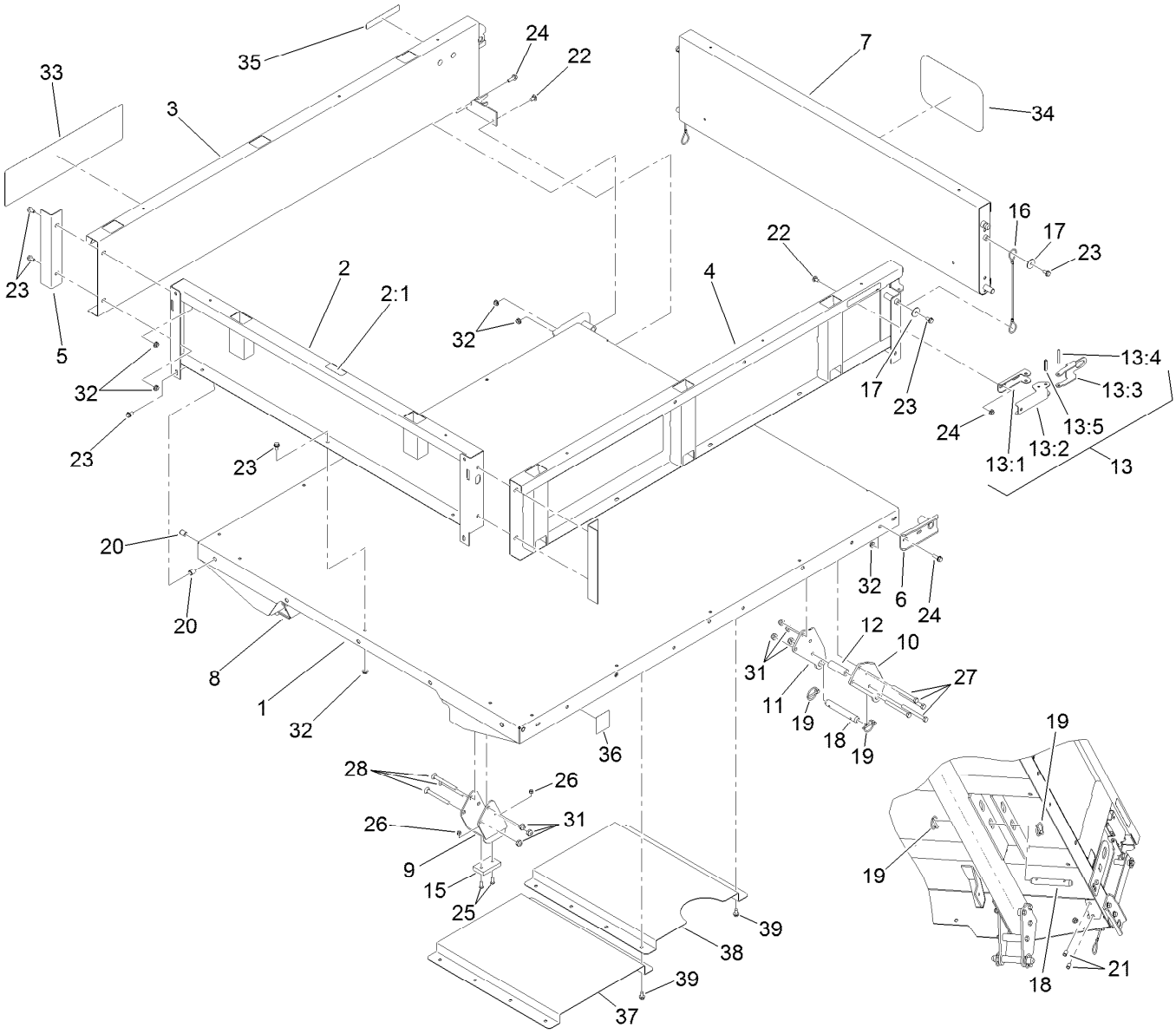


# Full Bed and Side Panel Assembly

| Ref. | Part Number | Qty. | Description |
|---|---|---|---|
| 1 | 93-9724-03 | 1 | Flatbed-Full |
| 2 | 92-5982 | 1 | Front Panel ASM |
| 2:1 | 115-7739 | 1 | Decal-No Riders |
| 3 | 92-1255-03 | 1 | Panel-Side, RH |
| 4 | 92-1248-03 | 1 | Panel-Side, LH |
| 5 | 92-1320-03 | 2 | Angle-Side |
| 6 | 92-1265-03 | 2 | Bracket-Pivot |
| 7 | 92-1259-03 | 1 | Tailgate-Rear |
| 8 | 106-2423-03 | 1 | Bracket-Spacer, RH |
| 9 | 106-2422-03 | 1 | Bracket-Spacer, LH |
| 10 | 93-9720-03 | 2 | Bracket-Pivot, Long (LH) |
| 11 | 93-9721-03 | 2 | Bracket-Pivot, Long (RH) |
| 12 | 93-9575 | 2 | Tube-Pivot, Flatbed |
| 13 | 99-1123 | 2 | Latch ASM |
| 13:1 | 92-1271 | 1 | Pivot-Latch |
| 13:2 | 99-1113 | 1 | Handle-Latch |
| 13:3 | 99-1112 | 1 | Plate-Retainer |
| 13:4 | 32121-78 | 1 | Pin-Roll |
| 13:5 | 32121-25 | 1 | Pin-Roll |
| 15 | 93-9719 | 2 | Block-Wear |
| 16 | 93-9595 | 2 | Lanyard |

| Ref. | Part Number | Qty. | Description |
|---|---|---|---|
| 17 | 3256-57 | 4 | Washer-Flat |
| 18 | 92-1233 | 4 | Pin-Clevis |
| 19 | 92-1298 | 8 | Pin-Lynch |
| 20 | 32148-7 | 4 | Nut-Clinch |
| 21 | 32148-6 | 4 | Nut-Clinch |
| 22 | 3230-18 | 6 | Screw-CARR |
| 23 | 3234-7 | 21 | Screw-HHF |
| 24 | 3234-29 | 6 | Screw-HHF |
| 25 | 3250-45 | 4 | Screw-SPH |
| 26 | 3296-42 | 4 | Nut-Lock, NI |
| 27 | 323-42 | 8 | Screw-HH |
| 28 | 3231-24 | 6 | Screw-CARR |
| 31 | 3296-44 | 14 | Nut-Lock, NI |
| 32 | 32128-20 | 27 | Nut-HF |
| 33 | 115-7914 | 2 | Decal |
| 34 | 105-4222 | 1 | Decal |
| 35 | 93-9868 | 2 | Decal-Caution |
| 36 | 93-9899 | 2 | Decal-Warning |
| 37 | 121-6300 | 1 | Shield-Heat, Bed (Front) |
| 38 | 121-6301 | 1 | Shield-Heat, Bed (Rear) |
| 39 | 32144-70 | 12 | Screw-HWHTF |

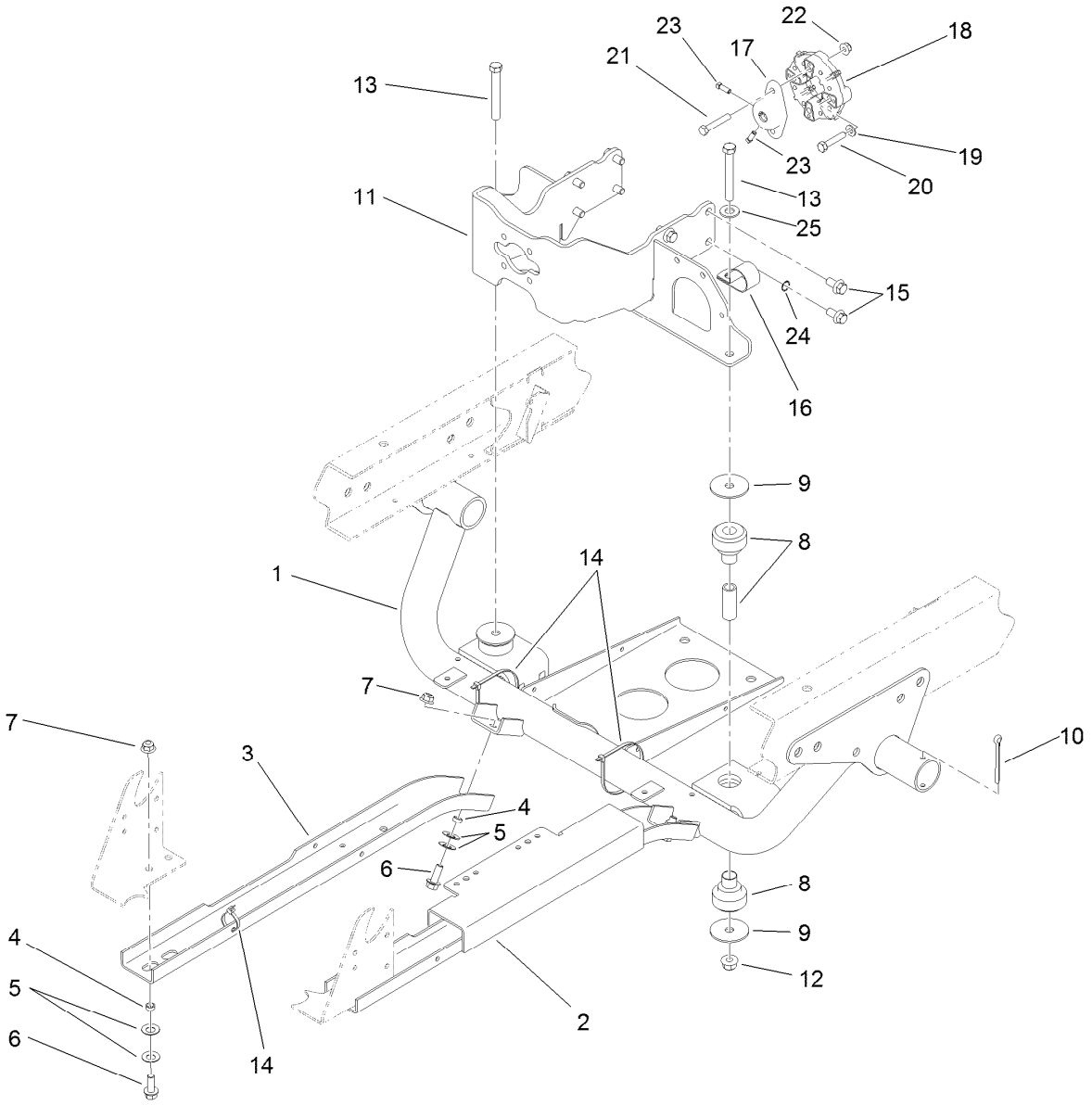


# Engine Sub Frame Assembly

| Ref. | Part Number | Qty. | Description |
|---|---|---|---|
| 1 | 119-9679-03 | 1 | Support-Engine |
| 2 | 115-2215-03 | 1 | Guard-LH |
| 3 | 87-4730-03 | 1 | Guard-Belly |
| 4 | 76-9100 | 6 | Spacer |
| 5 | 3290-413 | 12 | Washer-Belleville |
| 6 | 3234-11 | 6 | Screw-HHF |
| 7 | 104-8301 | 6 | Nut-HF, NI |
| 8 | 106-7865 | 2 | Mount-Engine |
| 9 | 87-5100 | 4 | Washer-Snubbing |
| 10 | 3272-37 | 2 | Pin-Cotter |
| 11 | 121-6259-03 | 1 | Mount-Pump, Engine |
| 12 | 114-8417 | 2 | Nut-HF, NI |
| 13 | 324-13 | 2 | Screw-HH |

| Ref. | Part Number | Qty. | Description |
|---|---|---|---|
| 14 | 3290-379 | 4 | Tie-Cable |
| 15 | 120-4839 | 8 | Screw-HHF |
| 16 | 2412-82 | 1 | Clamp-R |
| 17 | 115-2169 | 1 | Hub-Pump |
| 18 | 119-0652 | 1 | Coupler-Rubber |
| 19 | 3256-23 | 2 | Washer-Plain |
| 20 | 33114-040 | 2 | Screw-HH |
| 21 | 322-21 | 2 | Screw-HH |
| 22 | 104-8300 | 2 | Nut-HF, NI |
| 23 | 3241-6 | 2 | Screw-SQH |
| 24 | 3254-20 | 1 | Washer-Lock, Int |
| 25 | 3256-26 | 1 | Washer-Flat |

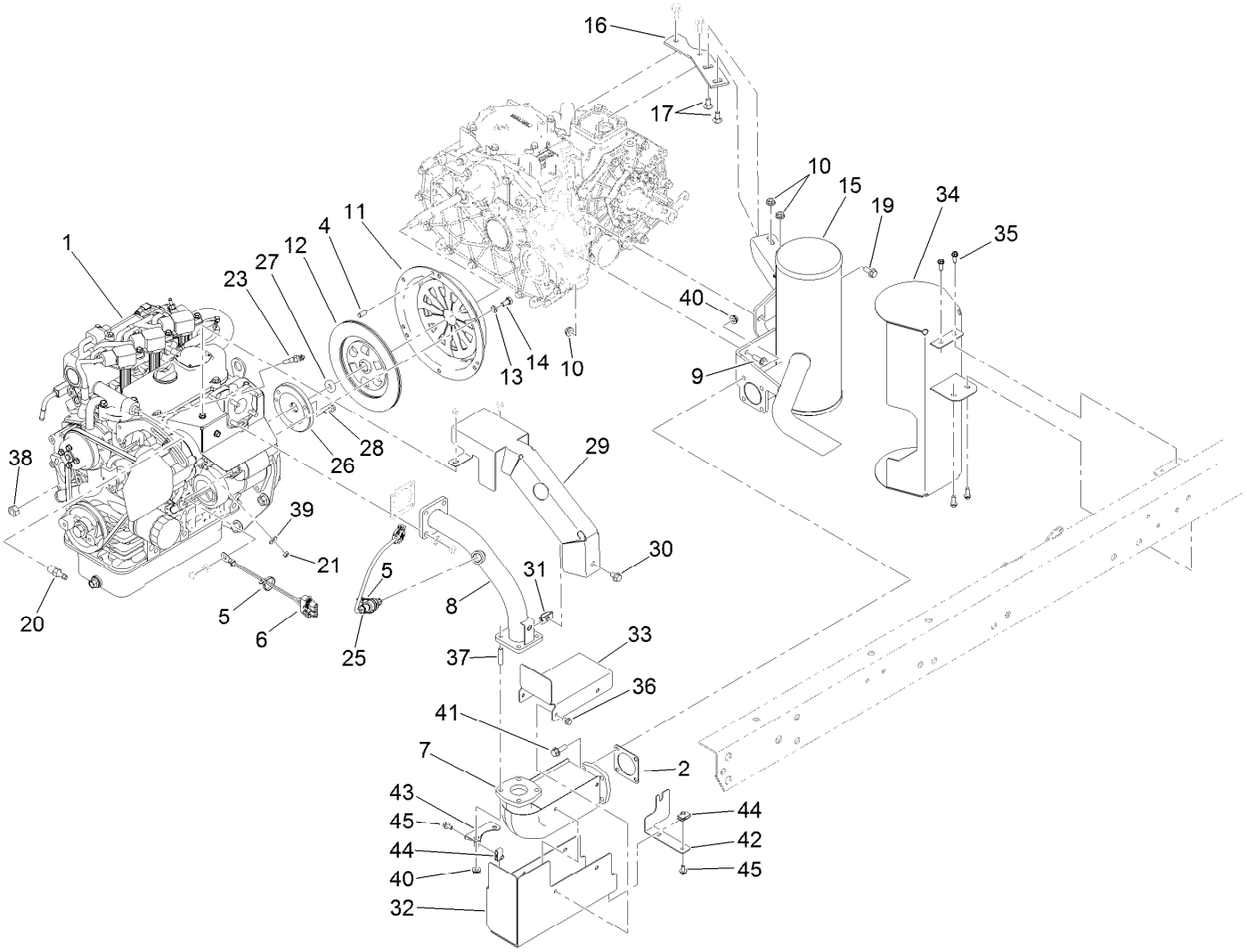


# Engine and Exhaust Assembly

| Ref. | Part Number | Qty. | Description |
|---|---|---|---|
| 1 | 120-4880 | 1 | Engine ASM |
| 2 | 105-4209 | 1 | Gasket-Muffler |
| 4 | 42-7160 | 3 | Pin |
| 5 | 3290-379 | 2 | Tie-Cable |
| 6 | 99-3441 | 1 | Harness-Wire, Fusible Link |
| 7 | 120-4895 | 1 | Converter-Catalytic |
| 8 | 121-6291 | 1 | Pipe-Exhaust |
| 9 | 3234-17 | 2 | Screw-HHF |
| 10 | 32128-20 | 4 | Nut-HF |
| 11 | 87-4690 | 1 | Cover-Clutch |
| 12 | 87-4700 | 1 | Disc-Clutch |
| 13 | 3253-4 | 6 | Washer-Lock |
| 14 | 33114-016 | 6 | Screw-HH |
| 15 | 115-7725 | 1 | Muffler |
| 16 | 105-9472 | 1 | Plate-Mount, Muffler |
| 17 | 3230-1 | 2 | Bolt-CARR |
| 19 | 98-7977 | 1 | Screw-HHF |
| 20 | 353-783 | 1 | Fitting-STR |
| 21 | 33013-00 | 1 | Nut-Hex |
| 23 | 120-5075 | 1 | Sender-Temperature |
| 25 | 121-3511 | 1 | Sensor-O2 F/W |
| 26 | 120-5006 | 1 | Holder-Bearing, Pilot |
| 27 | 115-6870 | 1 | Bearing-Ball, Sealed |
| 28 | 33103-020 | 3 | Screw-HHF |
| 29 | 121-6305 | 1 | Shield-Exhaust |
| 30 | 3234-30 | 1 | Screw-HHF |
| 31 | 110-3510 | 1 | Nut-Retainer |
| 32 | 121-6307 | 1 | Shield-Heat, Lower |
| 33 | 121-6308 | 1 | Shield-Heat, Upper |
| 34 | 121-6302 | 1 | Shield-Heat, Muffler |
| 35 | 49-2040 | 4 | Screw-HWHTF |
| 36 | 33103-012 | 4 | Screw-HHF |
| 37 | 121-6289 | 4 | Stud-Exhaust |
| 38 | 110-8815 | 1 | Nut-Hex |
| 39 | 3256-2 | 1 | Washer-Flat |
| 40 | 121-6322 | 8 | Nut-HF, Serrated |
| 41 | 121-6324 | 4 | Screw-HHF |
| 42 | 121-6328 | 1 | Mount-Muffler, Heat Shield |
| 43 | 121-6329 | 1 | Mount-Muffler, Heat Shield |
| 44 | 107069 | 3 | Clip |
| 45 | 3234-13 | 3 | Screw-HHF |

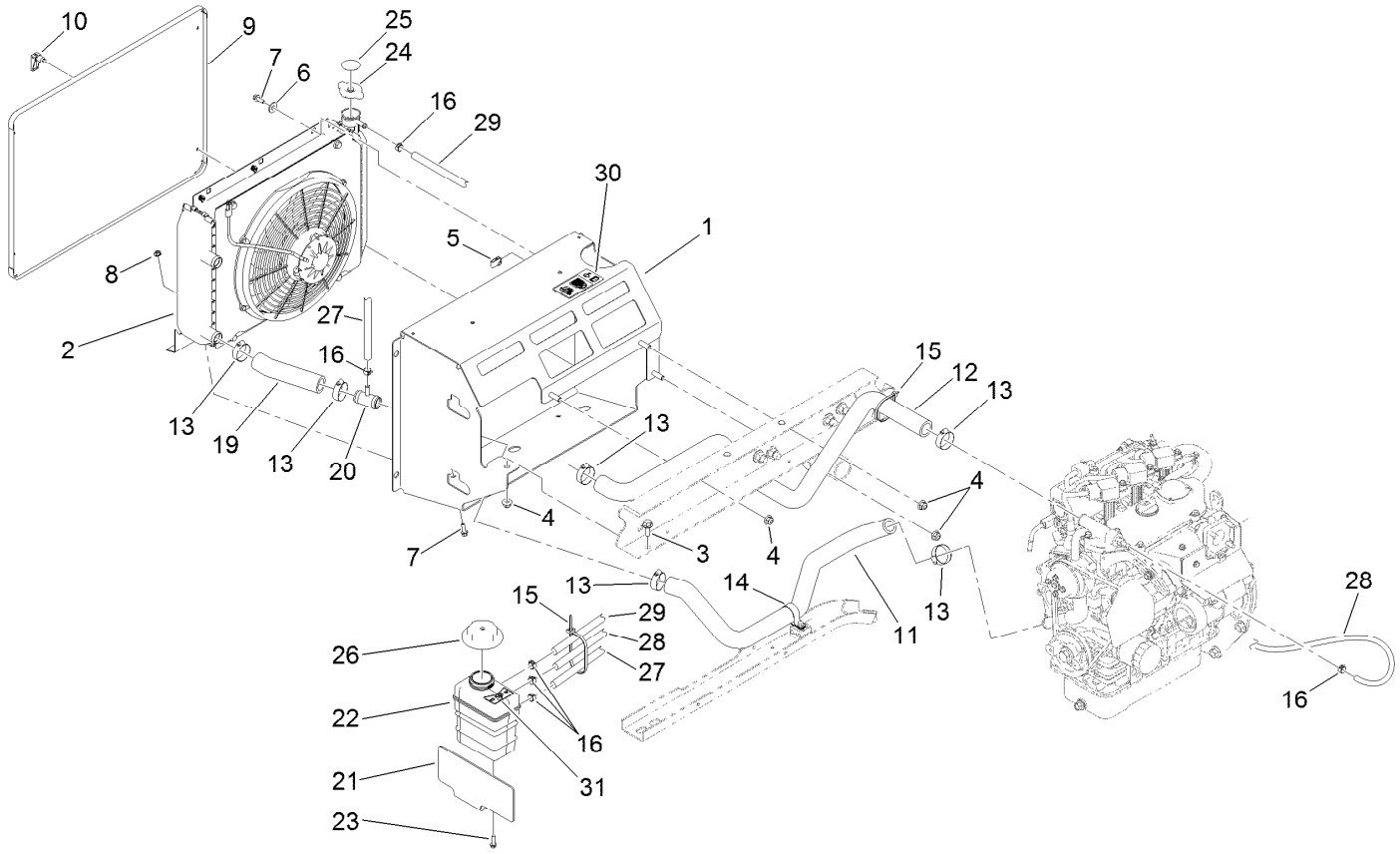


# Cooling System Assembly

| Ref. | Part Number | Qty. | Description |
|---|---|---|---|
| 1 | 115-2434 | 1 | Mount-Radiator |
| 2 | | 1 | Radiator ASM ● |
| 3 | 3234-11 | 1 | Screw-HHF |
| 4 | 104-8301 | 4 | Nut-HF, NI |
| 5 | 107069 | 2 | Clip |
| 6 | 3256-3 | 2 | Washer-Flat |
| 7 | 3234-4 | 4 | Screw-HHF |
| 8 | 32128-33 | 2 | Nut-HF |
| 9 | 115-2428-03 | 1 | Screen-Radiator |
| 10 | 74-5950 | 4 | Latch-Swell |
| 11 | 119-9487 | 1 | Hose-Coolant, Lower |
| 12 | 119-9486 | 1 | Hose-Coolant, Upper |
| 13 | 2412-34 | 6 | Clamp-Hose |
| 14 | 2412-74 | 1 | R-Clamp |
| 15 | 3290-379 | 4 | Tie-Cable |
| 16 | 92-2379 | 6 | Clamp-Hose |
| 19 | 120-4905 | 1 | Hose-Coolant, Lower |
| 20 | 120-4851 | 1 | Tee |
| 21 | 120-4906-03 | 1 | Plate-Mount, Tank |
| 22 | 120-4856 | 1 | Tank-Surge |
| 23 | 46-8091 | 2 | Screw-HWH |
| 24 | 120-4866 | 1 | Cap-System, Cooling |
| 25 | 106-6755 | 1 | Decal-Cap, Radiator |
| 26 | 120-4867 | 1 | Cap-Coolant, Threaded (15 PSI) |
| 27 | 120-5019 | 1 | Hose-Coolant |
| 28 | 120-5020 | 1 | Hose-Coolant |
| 29 | 120-5021 | 1 | Hose-Coolant |
| 30 | 121-6286 | 1 | Decal-Fill, Radiator |
| 31 | 121-6287 | 1 | Decal-Tank, Overflow |

● Not serviced separately

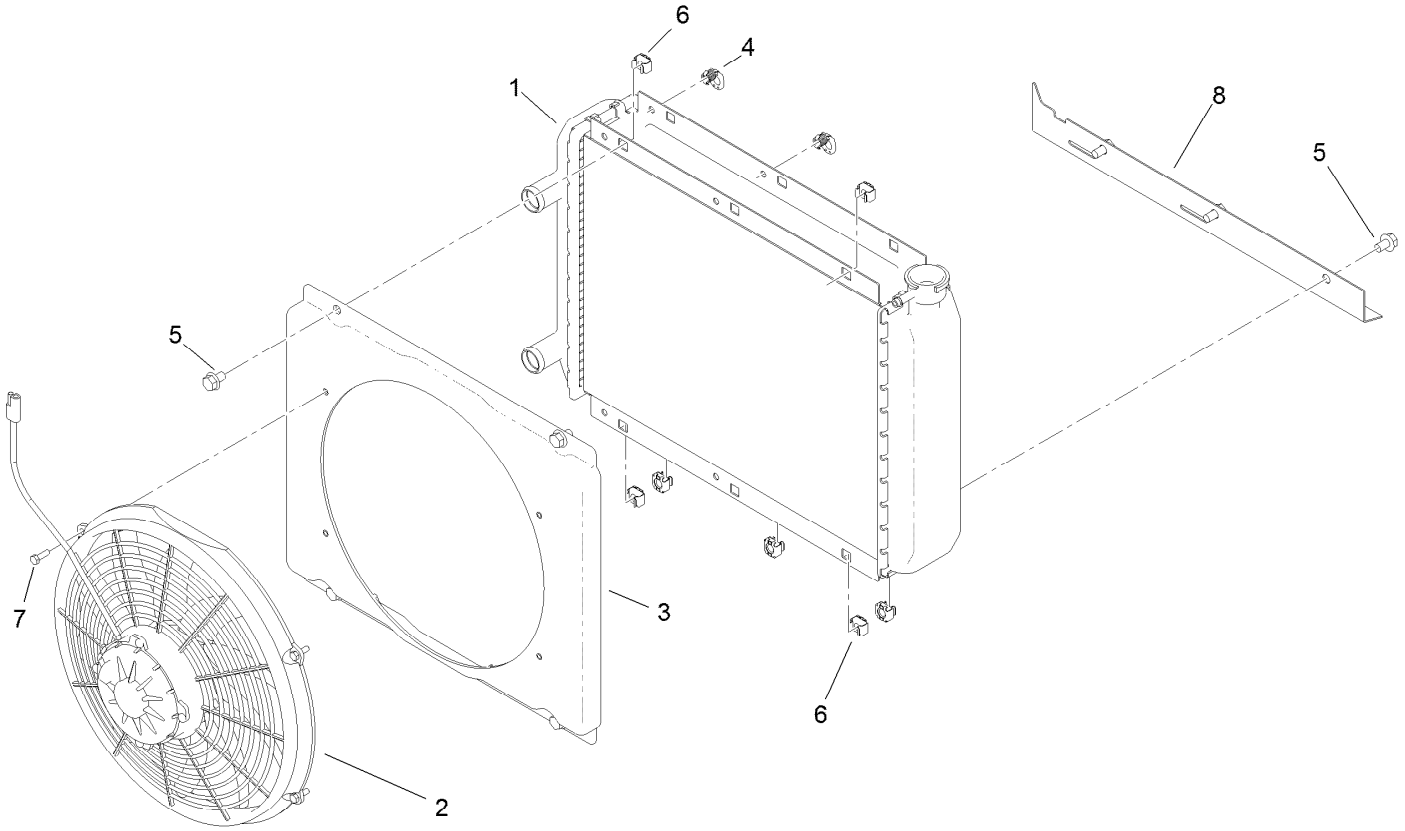


# Radiator Assembly

| Ref. | Part Number | Qty. | Description |
|---|---|---|---|
| 1 | 114-8384 | 1 | Radiator |
| 2 | 114-8385 | 1 | Fan-Electric |
| 3 | 114-8386 | 1 | Shroud |
| 4 | 114-8387 | 2 | Latch-Spring |
| 5 | 3234-30 | 7 | Screw-HHF |
| 6 | 703856 | 7 | Nut-Sq, Caged |
| 7 | 60-6910 | 4 | Screw-HH |
| 8 | 115-7765 | 1 | Plate-Mount, Lower |

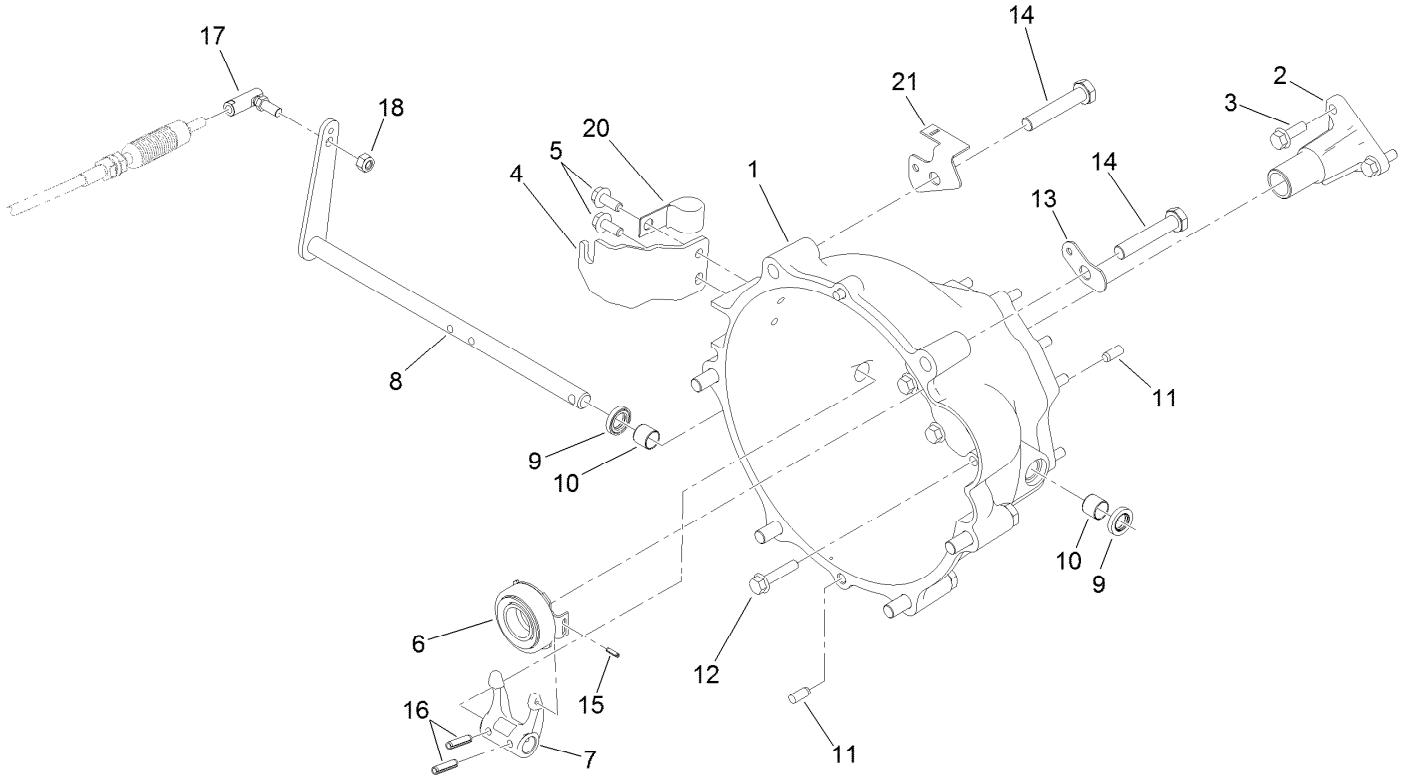


# Clutch Linkage Assembly

| Ref. | Part Number | Qty. | Description |
|---|---|---|---|
| 1 | 119-9498 | 1 | Bell Housing |
| 2 | 120-4886 | 1 | Guide-Release |
| 3 | 33104-025 | 3 | Screw-HHF |
| 4 | 115-2313 | 1 | Bracket-Cable, Clutch |
| 5 | 98-7977 | 2 | Screw-HHF |
| 6 | 110-2538 | 1 | Bearing-Release, Clutch |
| 7 | 87-5300 | 1 | Fork-Clutch |
| 8 | 115-2311 | 1 | Lever-Clutch |
| 9 | 87-1920 | 2 | Seal-Oil |
| 10 | 87-3770 | 2 | Bushing-Housing, Bell |

| Ref. | Part Number | Qty. | Description |
|---|---|---|---|
| 11 | 87-1910 | 4 | Pin-Dowel |
| 12 | 33104-040 | 9 | Screw-HHF |
| 13 | 87-6410 | 1 | Bracket-Harness |
| 14 | 107-7983 | 6 | Screw-HH |
| 15 | 32121-7 | 1 | Pin-Roll, Slotted |
| 16 | 32121-24 | 2 | Pin-Spring |
| 17 | 2411-33 | 1 | Balljoint-RH (W/Grommet) |
| 18 | 3296-4 | 1 | Nut-Lock |
| 20 | 120-5018 | 1 | Clip-Open J, Coated |
| 21 | 120-5093 | 1 | Bracket-Clip, Harness |

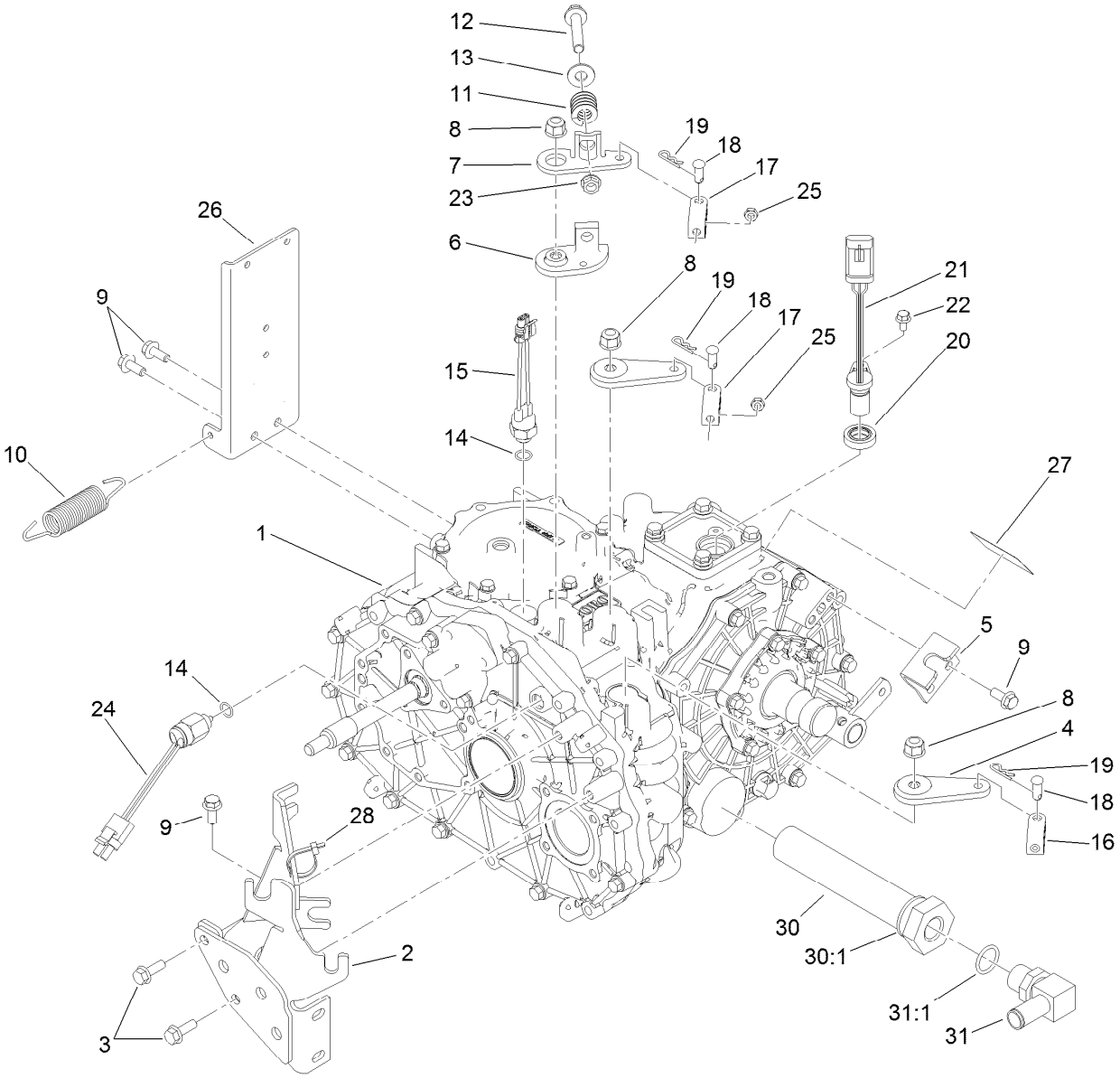


# Transaxle Assembly

| Ref. | Part Number | Qty. | Description |
|---|---|---|---|
| 1 | 115-7783 | 1 | 2 Wheel Drive Transaxle ASM |
| 2 | 105-4207-03 | 1 | Mount-Cable |
| 3 | 33104-025 | 2 | Screw-HHF |
| 4 | 87-7960 | 2 | Lever-Shift |
| 5 | 87-4470 | 1 | Bracket-Lock, Differential |
| 6 | 87-7970 | 1 | Arm-Shift |
| 7 | 87-8250 | 1 | Plate-Arm, Shift |
| 8 | 103-9511 | 3 | Nut-Lock, NI |
| 9 | 98-7977 | 5 | Screw-HHF |
| 10 | 68-9950 | 1 | Spring-Traction |
| 11 | 87-6910 | 1 | Spring-Compression |
| 12 | 66-9302 | 1 | Screw-HHF, Whiz |
| 13 | 3256-4 | 1 | Washer-Flat |
| 14 | 237-30 | 2 | O-Ring |
| 15 | 72-4310 | 1 | Switch-Ball |
| 16 | 87-7160 | 1 | Clevis-Cable |

| Ref. | Part Number | Qty. | Description |
|---|---|---|---|
| 17 | 87-2310 | 2 | Clevis-Cable |
| 18 | 283-62 | 3 | Pin-Clevis |
| 19 | 3290-307 | 3 | Pin-Cotter |
| 20 | 92-3735 | 1 | Seal-Sensor, Oil |
| 21 | 120-4800 | 1 | Sensor-Geartooth |
| 22 | 33103-012 | 1 | Screw-HHF |
| 23 | 3290-357 | 1 | Nut-HHF, Whiz |
| 24 | 87-6710 | 1 | Switch-Transmission |
| 25 | 3220-1 | 2 | Nut-Jam |
| 26 | 115-2240-03 | 1 | Bracket-Fuel |
| 27 | 115-7741 | 1 | Decal-Oil, Transmission |
| 28 | 3290-379 | 1 | Tie-Cable |
| 30 | 87-3990 | 1 | Strainer-Transaxle |
| 30:1 | 237-123 | 1 | O-Ring |
| 31 | 353-987 | 1 | Fitting-Elbow, 90 |
| 31:1 | 237-81 | 1 | O-Ring |

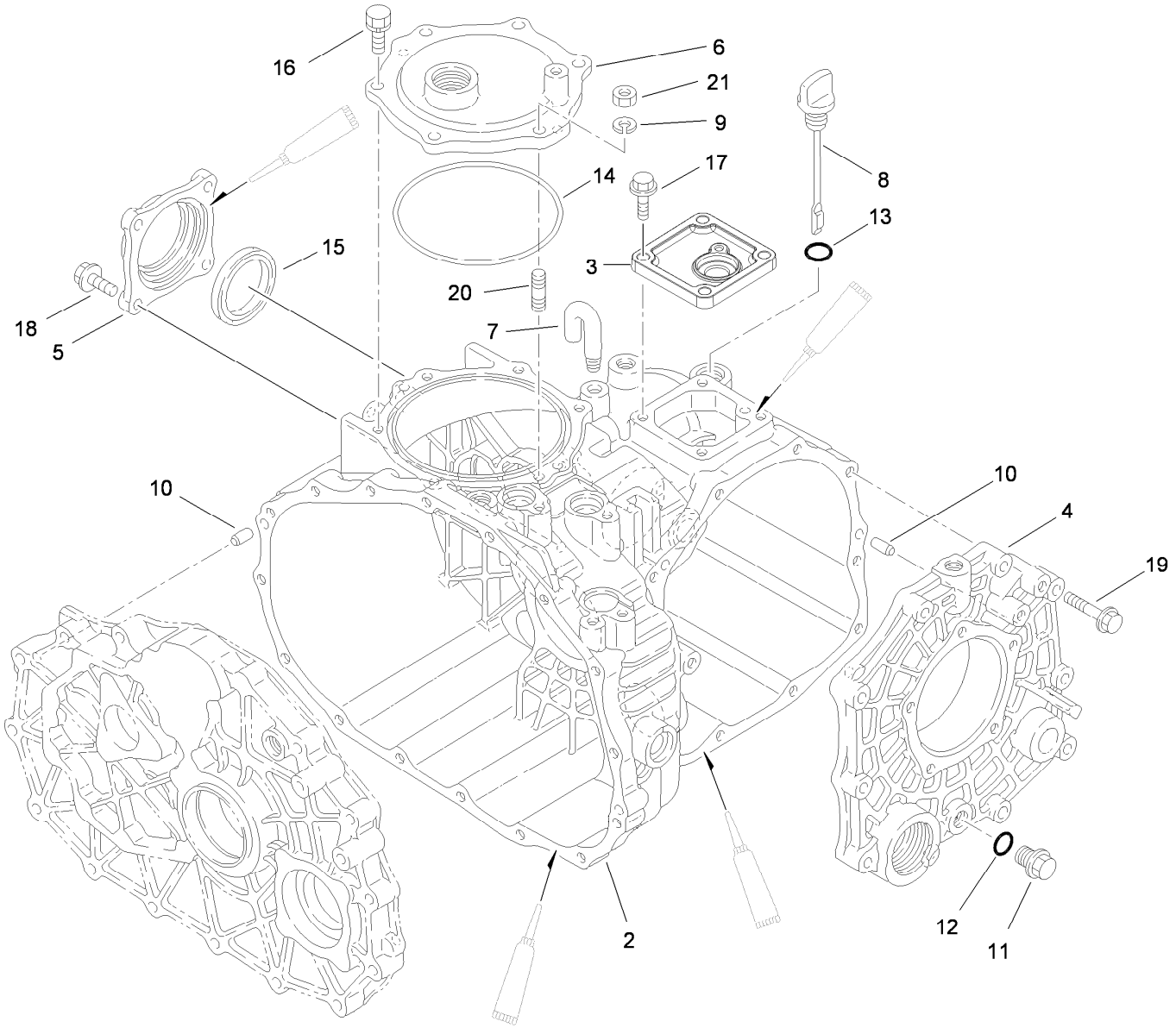


# Case Assembly
# Transaxle Assembly No. 115-7783

| Ref. | Part Number | Qty. | Description |
|---|---|---|---|
| 2 | 92-0651 | 1 | Case-Transmission |
| 3 | 92-0810 | 1 | Cover-Upper, Sensor |
| 4 | 92-0653 | 1 | Cover-Side |
| 5 | 92-0655 | 1 | Cover-Seal, Axle |
| 6 | 92-0656 | 1 | Cover-Upper, PTO |
| 7 | 92-0743 | 1 | Breather-Air |
| 8 | 92-0662 | 1 | Cap-Oil |
| 9 | 92-0762 | 1 | Washer-Spring |
| 10 | 92-0765 | 4 | Pin-Parallel |
| 11 | 92-0773 | 1 | Plug-Drain |

| Ref. | Part Number | Qty. | Description |
|---|---|---|---|
| 12 | 92-0787 | 1 | O-Ring |
| 13 | 92-0788 | 1 | O-Ring |
| 14 | 92-0790 | 1 | O-Ring |
| 15 | 92-0793 | 1 | Seal-Oil |
| 16 | 92-0796 | 5 | Bolt |
| 17 | 33104-025 | 4 | Screw-HHF |
| 18 | 33104-025 | 4 | Screw-HHF |
| 19 | 33104-040 | 10 | Screw-HHF |
| 20 | 92-0805 | 1 | Bolt 8X20 |
| 21 | 68-9400 | 1 | Nut-Flange |

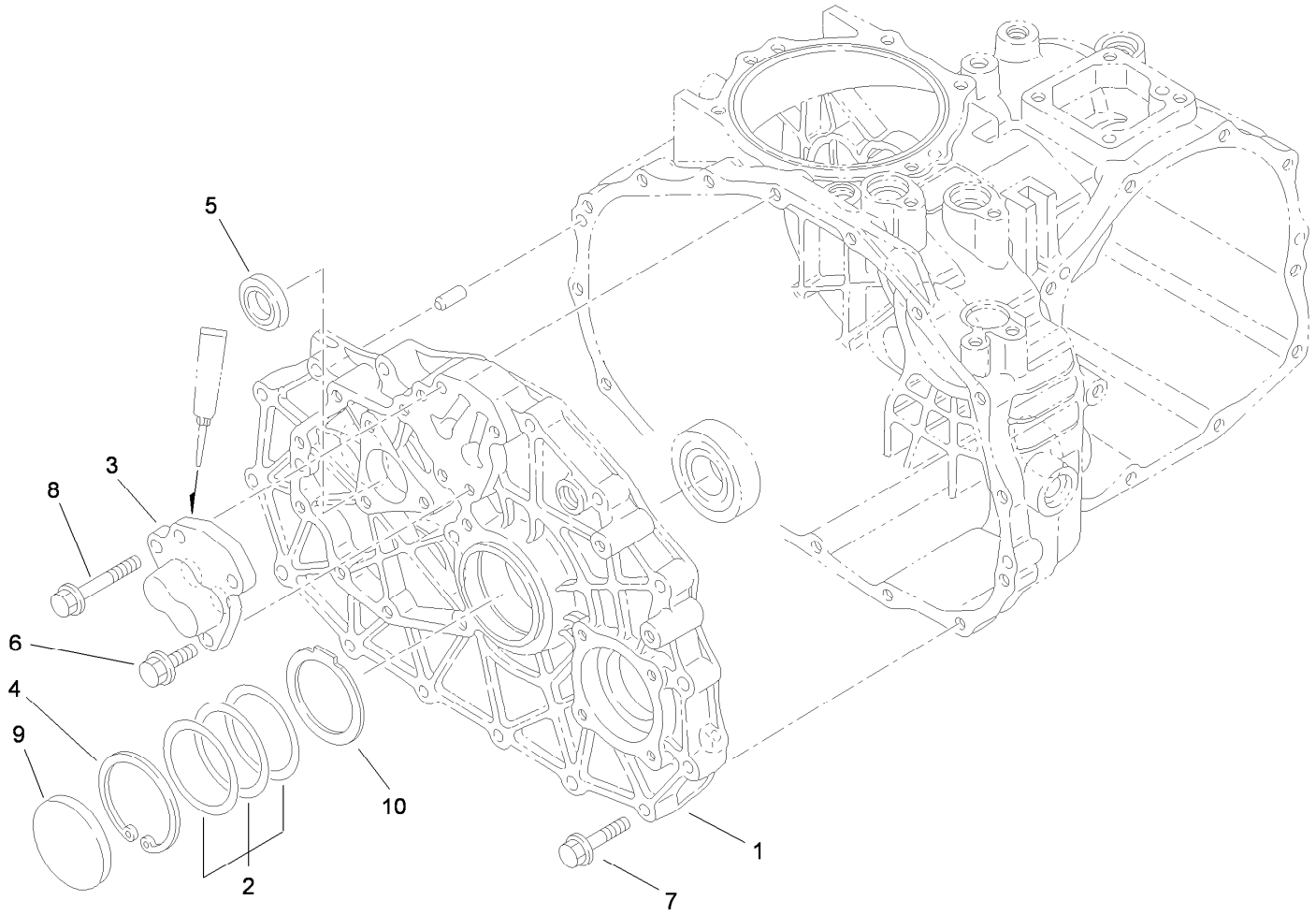


# Center Plate Assembly
# Transaxle Assembly No. 115-7783

| *Ref.* | *Part Number* | *Qty.* | *Description* |
|---|---|---|---|
| 1 | 100-4461 | 1 | Plate-Center |
| 2 | 100-4460 | 1 | Shim-Set |
| 3 | 92-0706 | 1 | Shaft-Fork |
| 4 | 92-0759 | 1 | Ring-Snap |
| 5 | 92-0791 | 1 | Seal-Oil |
| 6 | 33104-025 | 3 | Screw-HHF |
| 7 | 33104-040 | 15 | Screw-HHF |
| 8 | 33104-050 | 1 | Screw-HHF |
| 9 | 92-0807 | 1 | Cap-Sealing |
| 10 | 100-4465 | 1 | Shim (W/Tab) |

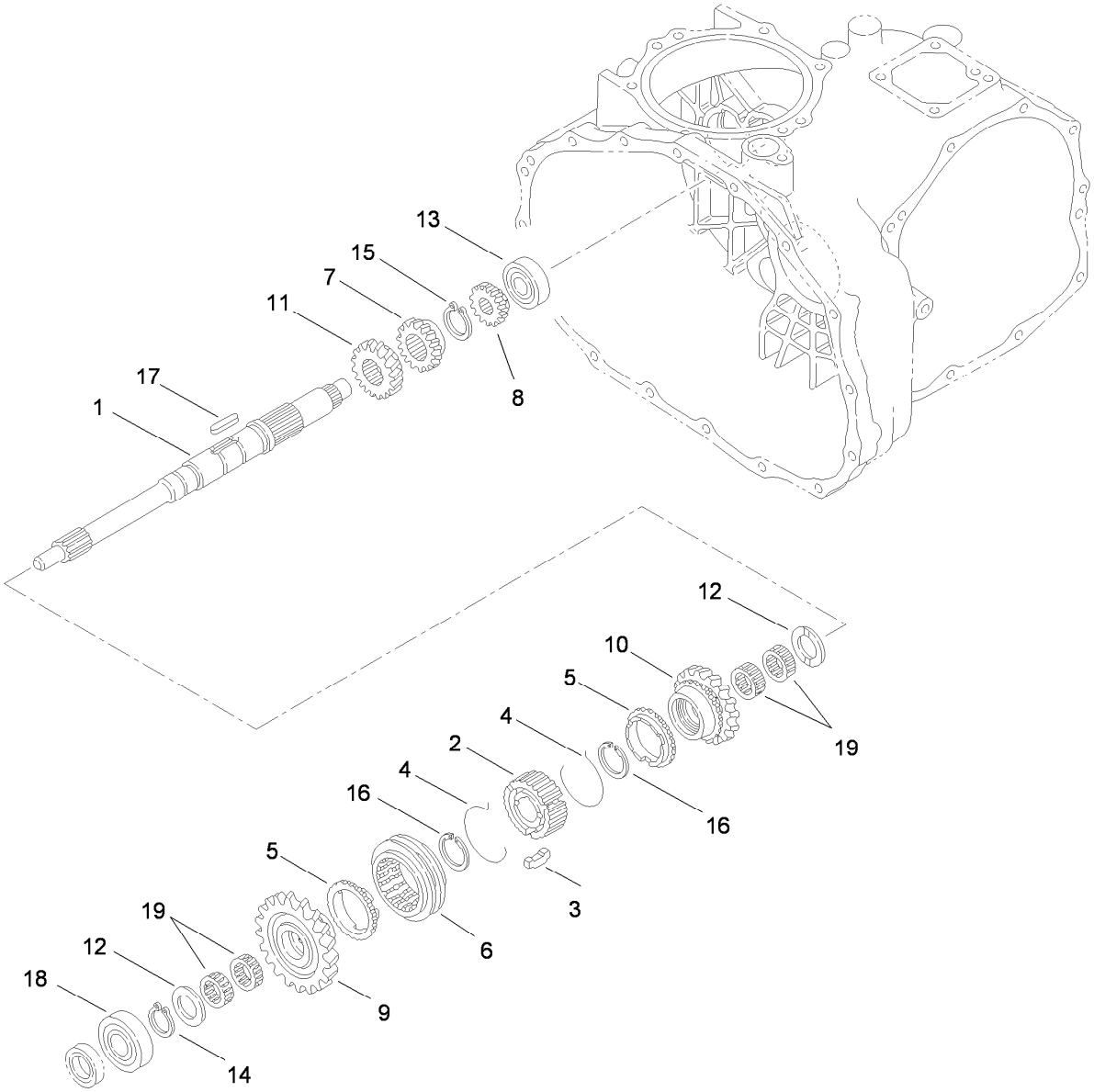


# Main Shaft Assembly
# Transaxle Assembly No. 115-7783

| Ref. | Part Number | Qty. | Description |
|---|---|---|---|
| 1 | 92-0663 | 1 | Shaft-Main |
| 2 | 92-0664 | 1 | Hub-Synchro |
| 3 | 92-0665 | 3 | Key-Synchro |
| 4 | 92-0666 | 2 | Spring-Synchro |
| 5 | 92-0667 | 2 | Ring-Synchro |
| 6 | 92-0668 | 1 | Shifter-Synchro |
| 7 | 92-0672 | 1 | Gear-Main, 18 Tooth |
| 8 | 92-0673 | 1 | Gear-Main, 14 Tooth |
| 9 | 110-2521 | 1 | Gear-Main, 27 Tooth |
| 10 | 110-2522 | 1 | Gear- Main, 24 Tooth |

| Ref. | Part Number | Qty. | Description |
|---|---|---|---|
| 11 | 92-0687 | 1 | Gear-Main, 16 Tooth |
| 12 | 92-0740 | 2 | Washer-Thrust |
| 13 | 92-0650 | 1 | Bearing |
| 14 | 92-0753 | 1 | Ring-Snap |
| 15 | 92-0754 | 1 | Ring-Snap |
| 16 | 92-0763 | 2 | Ring-Snap |
| 17 | 92-0772 | 1 | Key |
| 18 | 251-8 | 1 | Bearing-Ball |
| 19 | 92-0781 | 4 | Bearing-Needle |

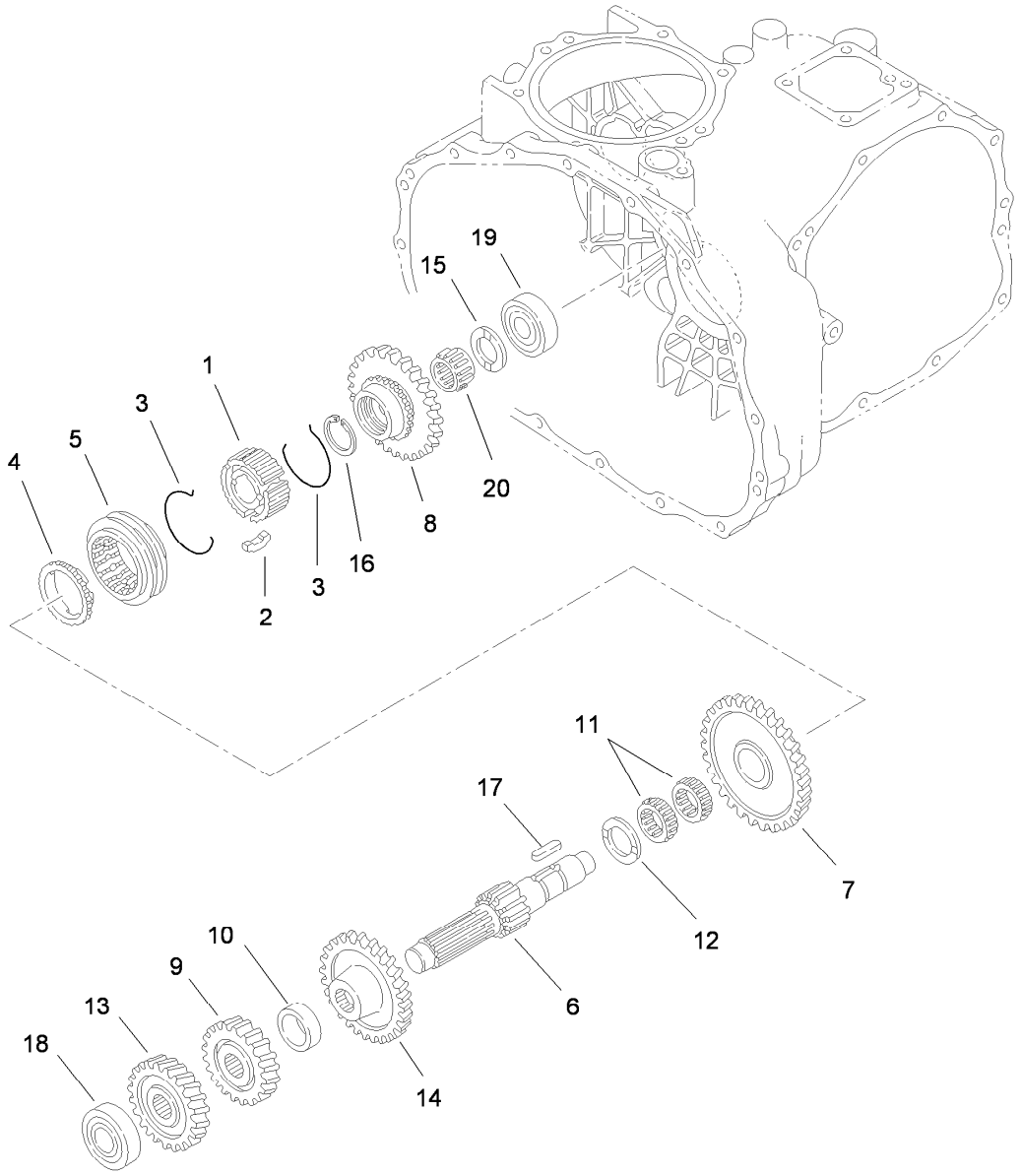


# Reduction Shaft Assembly
# Transaxle Assembly No. 115-7783

| Ref. | Part Number | Qty. | Description |
|---|---|---|---|
| 1 | 92-0664 | 1 | Hub-Synchro |
| 2 | 92-0665 | 3 | Key-Synchro |
| 3 | 92-0666 | 2 | Spring-Synchro |
| 4 | 92-0667 | 1 | Ring-Synchro |
| 5 | 92-0668 | 1 | Shifter-Synchro |
| 6 | 92-0674 | 1 | Shaft-Reduction |
| 7 | 110-2524 | 1 | Gear- Reduction, 49 Tooth |
| 8 | 92-0819 | 1 | Gear-Reduction, 40 Tooth |
| 9 | 92-0769 | 1 | Pin-Roll |
| 10 | 92-0680 | 1 | Collar |

| Ref. | Part Number | Qty. | Description |
|---|---|---|---|
| 11 | 92-0681 | 2 | Bearing-Needle |
| 12 | 92-0682 | 1 | Washer-Thrust |
| 13 | 92-0822 | 1 | Gear-Reduction, 28 Tooth |
| 14 | 92-0823 | 1 | Gear-Reduction, 43 Tooth |
| 15 | 92-0740 | 1 | Washer-Thrust |
| 16 | 92-0673 | 1 | Gear-Main, 14 Tooth |
| 17 | 92-0772 | 1 | Key |
| 18 | 105-7985 | 1 | Bearing |
| 19 | 92-0778 | 1 | Bearing |
| 20 | 92-0782 | 1 | Bearing-Needle |

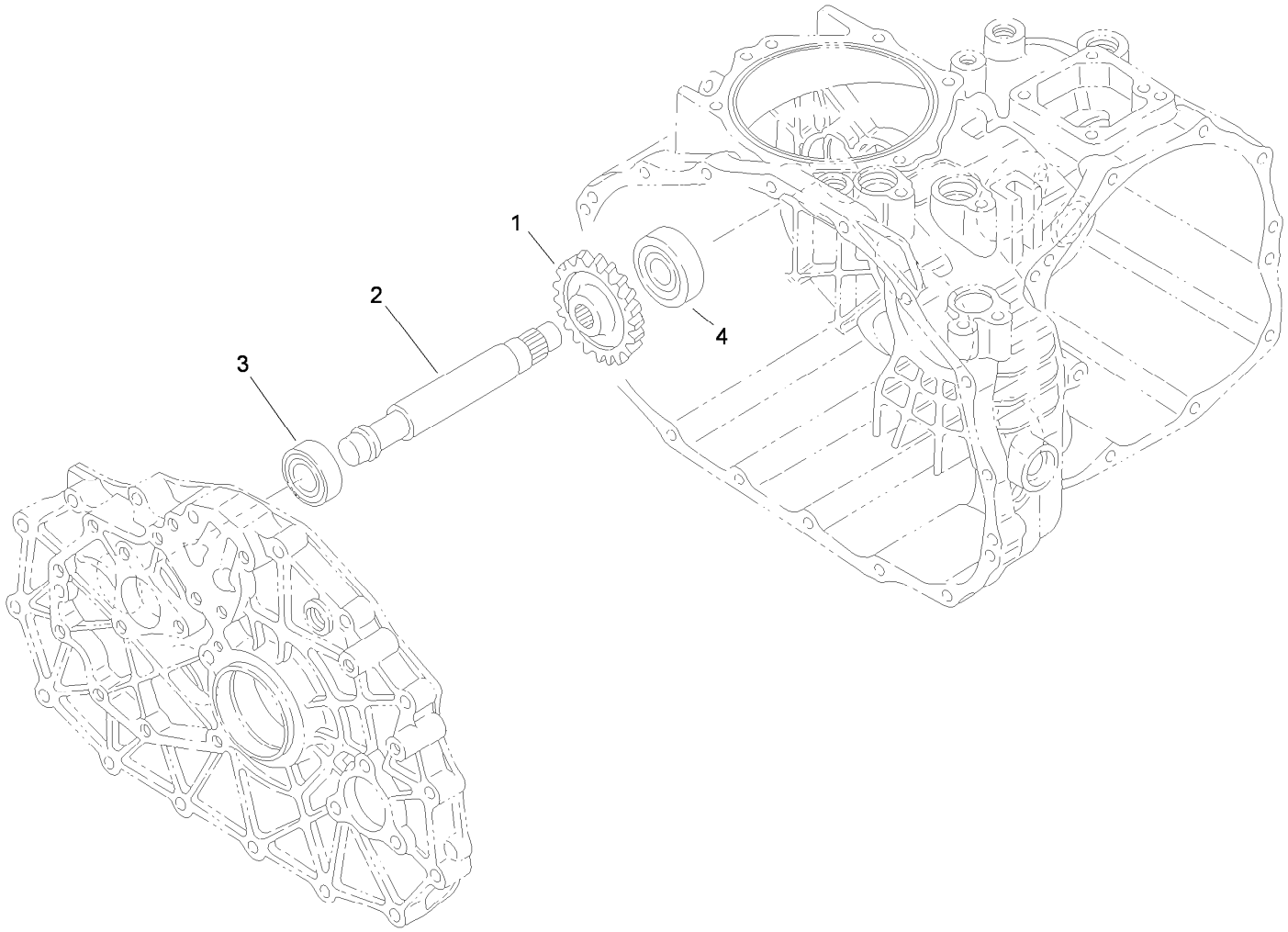


# Reverse Shaft Assembly
# Transaxle Assembly No. 115-7783

| *Ref.* | *Part Number* | *Qty.* | *Description* |
|---|---|---|---|
| 1 | 92-0684 | 1 | Gear-Reverse, 33 Tooth |
| 2 | 92-0824 | 1 | Shaft-Idler, Reverse |
| 3 | 251-346 | 1 | Bearing-Ball |
| 4 | 92-0778 | 1 | Bearing |

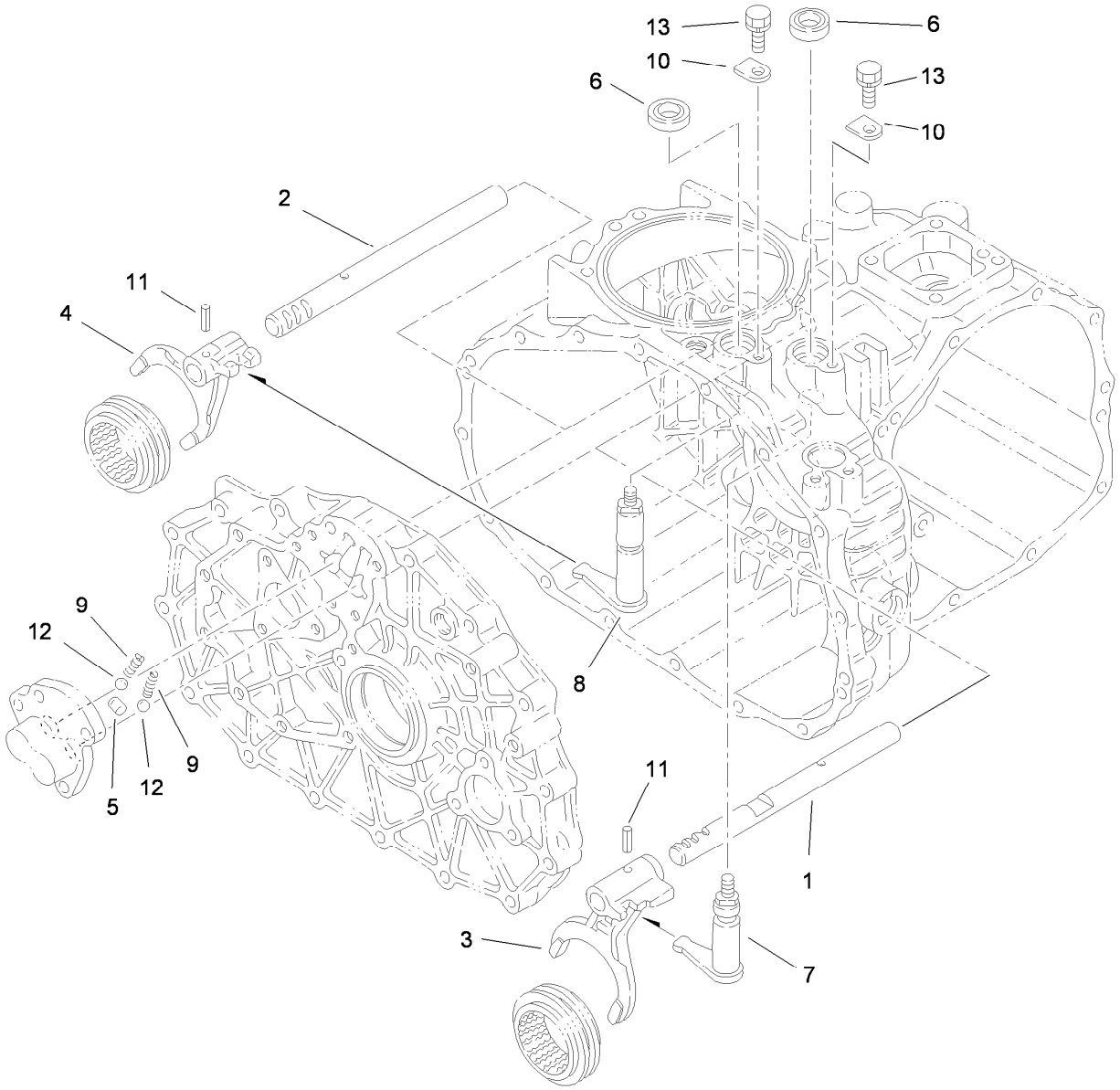


# Main Shift Assembly
# Transaxle Assembly No. 115-7783

| *Ref.* | *Part Number* | *Qty.* | *Description* |
|---|---|---|---|
| 1 | 92-0698 | 1 | Shaft-Fork |
| 2 | 92-0699 | 1 | Shaft-Fork |
| 3 | 92-0700 | 1 | Fork-Shift |
| 4 | 92-0701 | 1 | Fork-Shift |
| 5 | 92-0705 | 1 | Lock-Spindle |
| 6 | 92-0729 | 2 | Seal-Oil |
| 7 | 92-0816 | 1 | Arm-Shift |
| 8 | 92-0817 | 1 | Arm-Shift |
| 9 | 92-0731 | 2 | Spring |
| 10 | 92-0732 | 2 | Plate-Keeper |
| 11 | 92-0769 | 2 | Pin-Roll |
| 12 | 92-0785 | 2 | Ball-Steel |
| 13 | 33104-016 | 2 | Screw-HHF |

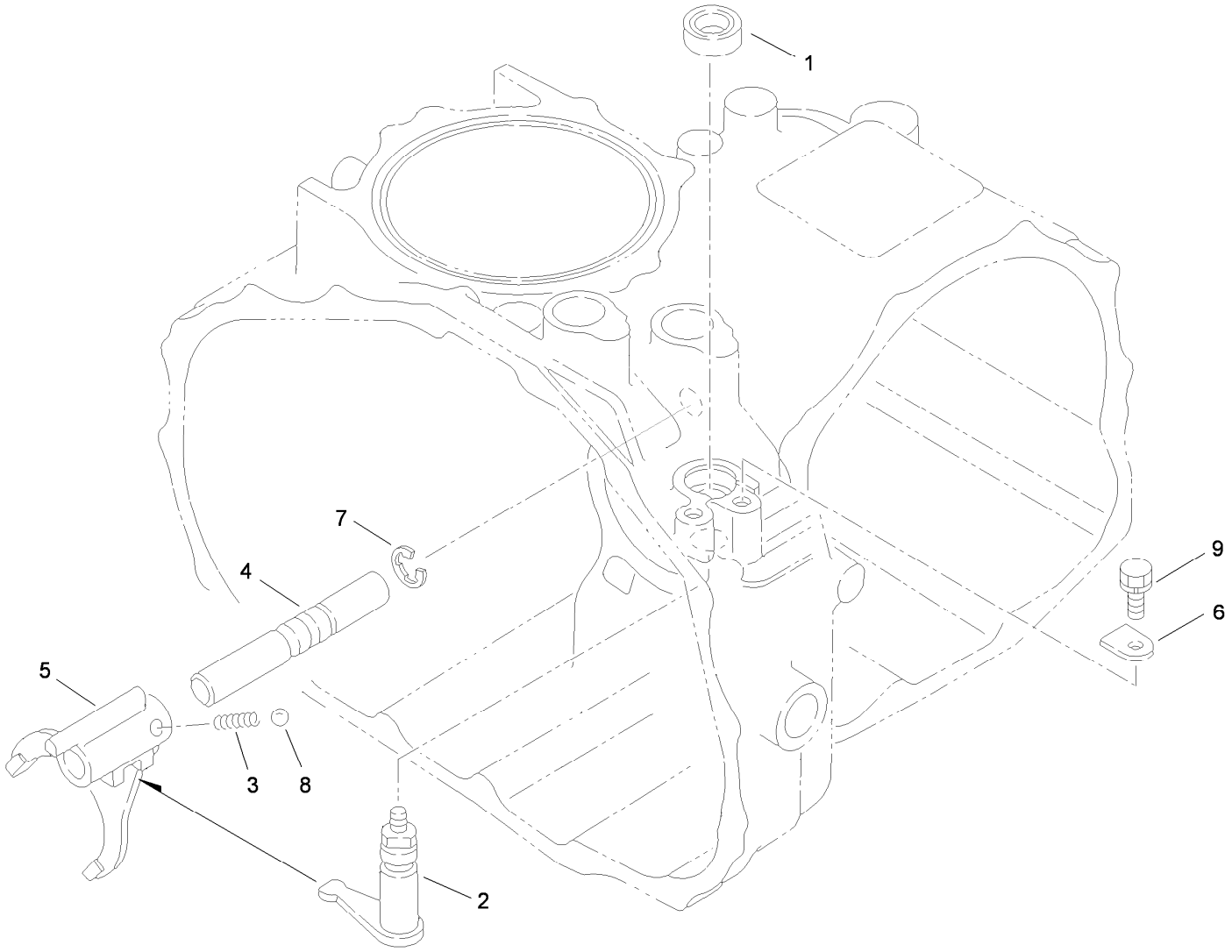


# Hi-Lo Shift Assembly
# Transaxle Assembly No. 115-7783

| *Ref.* | *Part Number* | *Qty.* | *Description* |
|---|---|---|---|
| 1 | 92-0729 | 1 | Seal-Oil |
| 2 | 92-0818 | 1 | Arm-Shift |
| 3 | 92-0731 | 1 | Spring |
| 4 | 92-0708 | 1 | Shaft-Fork |
| 5 | 92-0709 | 1 | Fork-Shift |
| 6 | 92-0732 | 1 | Plate-Keeper |
| 7 | 92-0761 | 1 | Ring-E |
| 8 | 92-0785 | 1 | Ball-Steel |
| 9 | 33104-016 | 1 | Screw-HHF |

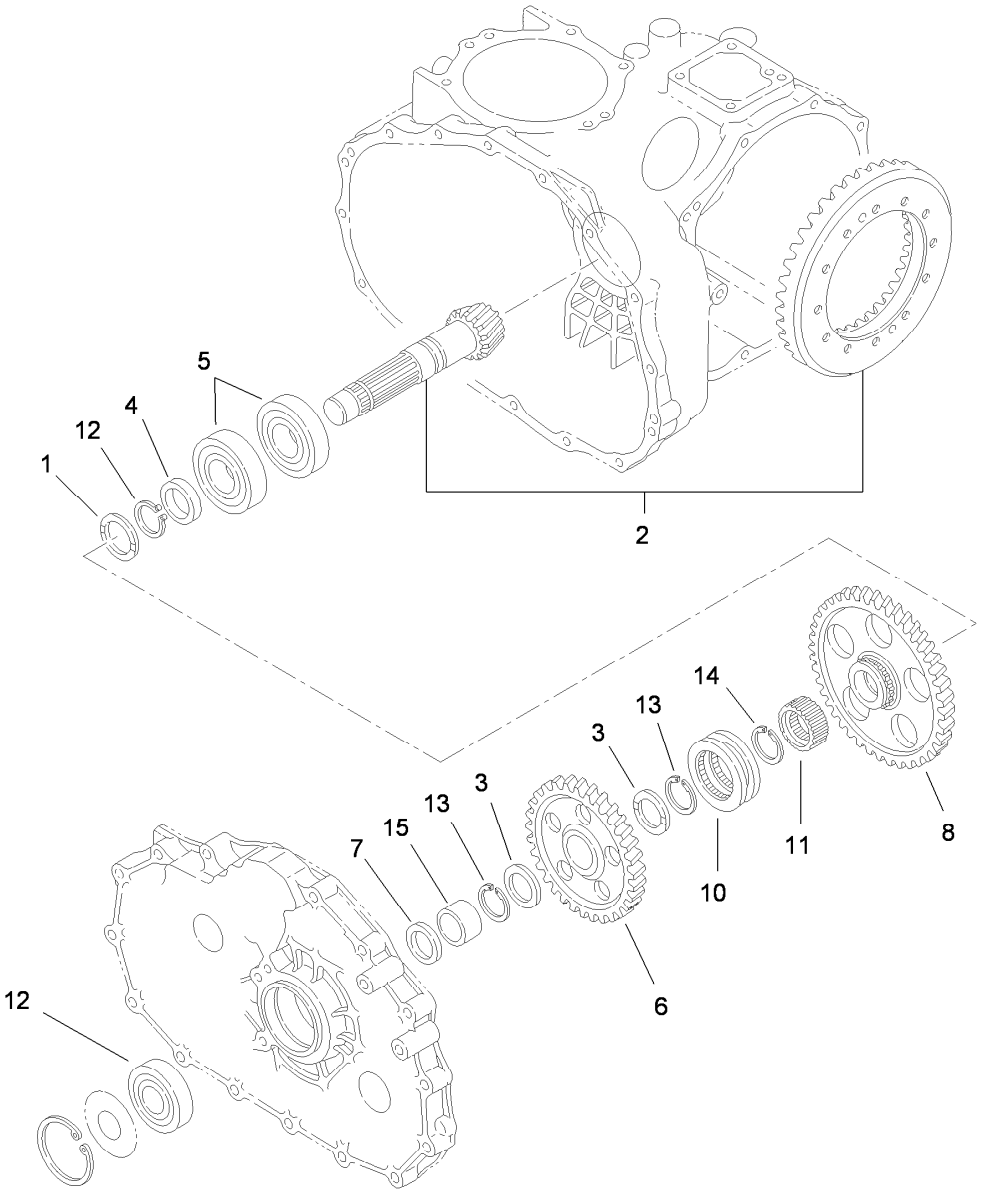


# Countershaft Assembly
# Transaxle Assembly No. 115-7783

| *Ref.* | *Part Number* | *Qty.* | *Description* |
|---|---|---|---|
| 1 | 92-0741 | 1 | Washer-Thrust |
| 2 | 105-7983 | 1 | Countershaft And Ring Gear ASM |
| 3 | 92-0711 | 2 | Washer-Thrust |
| 4 | 92-0713 | 1 | Collar |
| 5 | 92-0714 | 2 | Bearing |
| 6 | 92-0715 | 1 | Gear-Countershaft |
| 7 | 92-0716 | 1 | Collar |
| 8 | 92-0717 | 1 | Gear-Countershaft |
| 10 | 92-0718 | 1 | Shifter |
| 11 | 105-7986 | 1 | Collar-Spline |
| 12 | 92-0712 | 1 | Bearing-Ball |
| 13 | 105-7987 | 2 | Ring-Snap |
| 14 | 92-0755 | 1 | Ring-Snap |
| 15 | 92-0783 | 1 | Race-Inner |

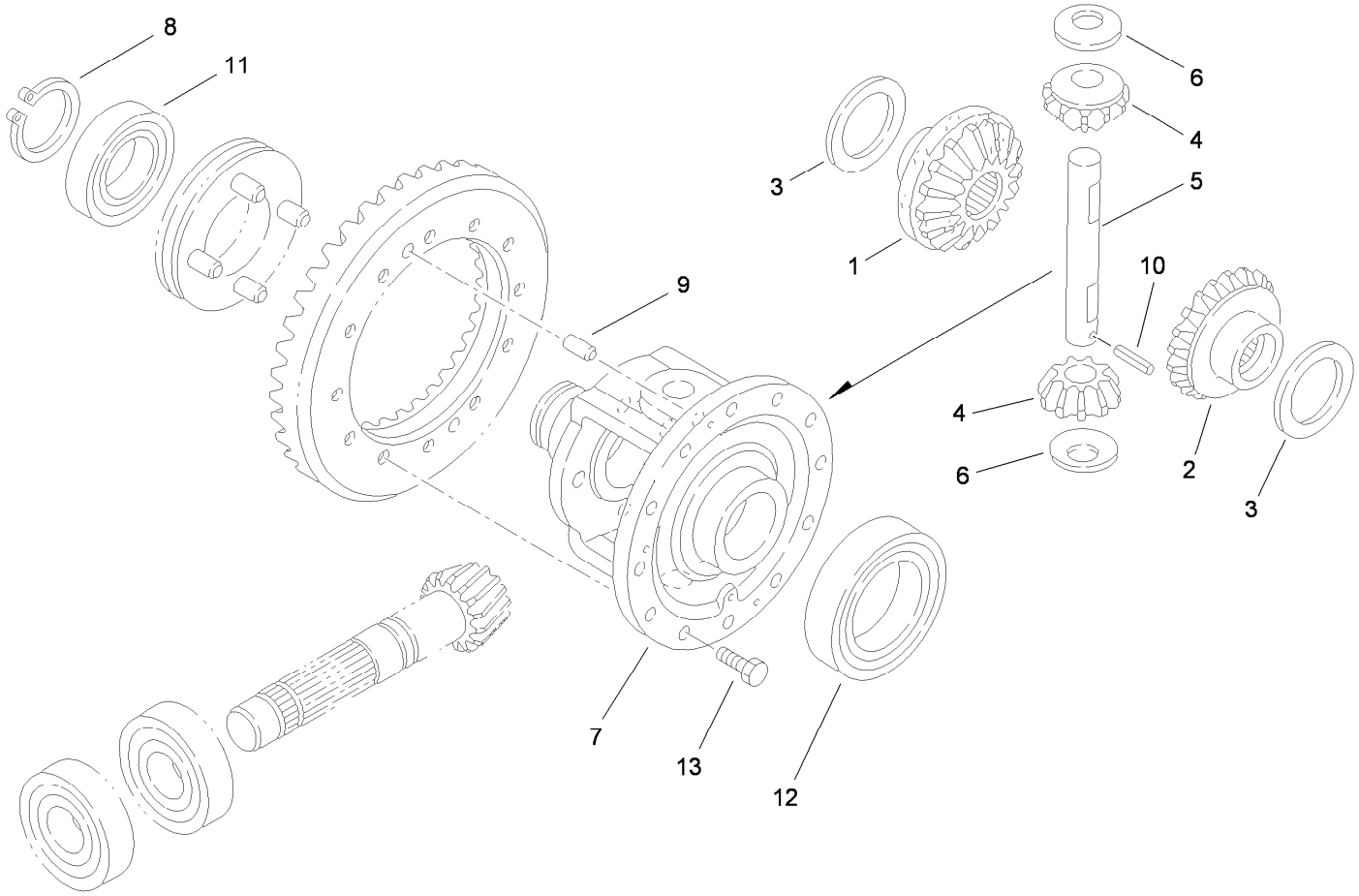


# Differential Gear Assembly
# Transaxle Assembly No. 115-7783

| *Ref.* | *Part Number* | *Qty.* | *Description* |
|---|---|---|---|
| 1 | 92-0745 | 1 | Gear-Side, LH |
| 2 | 92-0746 | 1 | Gear-Side, RH |
| 3 | 92-0747 | 2 | Side-Gear, Left Inner |
| 4 | 92-0748 | 2 | Pinion-Differential |
| 5 | 92-0749 | 1 | Shaft-Pinion |
| 6 | 92-0750 | 2 | Washer |
| 7 | 92-0720 | 1 | Case-Differential |
| 8 | 92-0756 | 1 | Ring-Snap |
| 9 | 92-0765 | 2 | Pin-Parallel |
| 10 | 92-0768 | 1 | Pin-Roll, Spring |
| 11 | 92-0775 | 1 | Bearing |
| 12 | 92-0776 | 1 | Bearing |
| 13 | 92-0803 | 12 | Bolt |

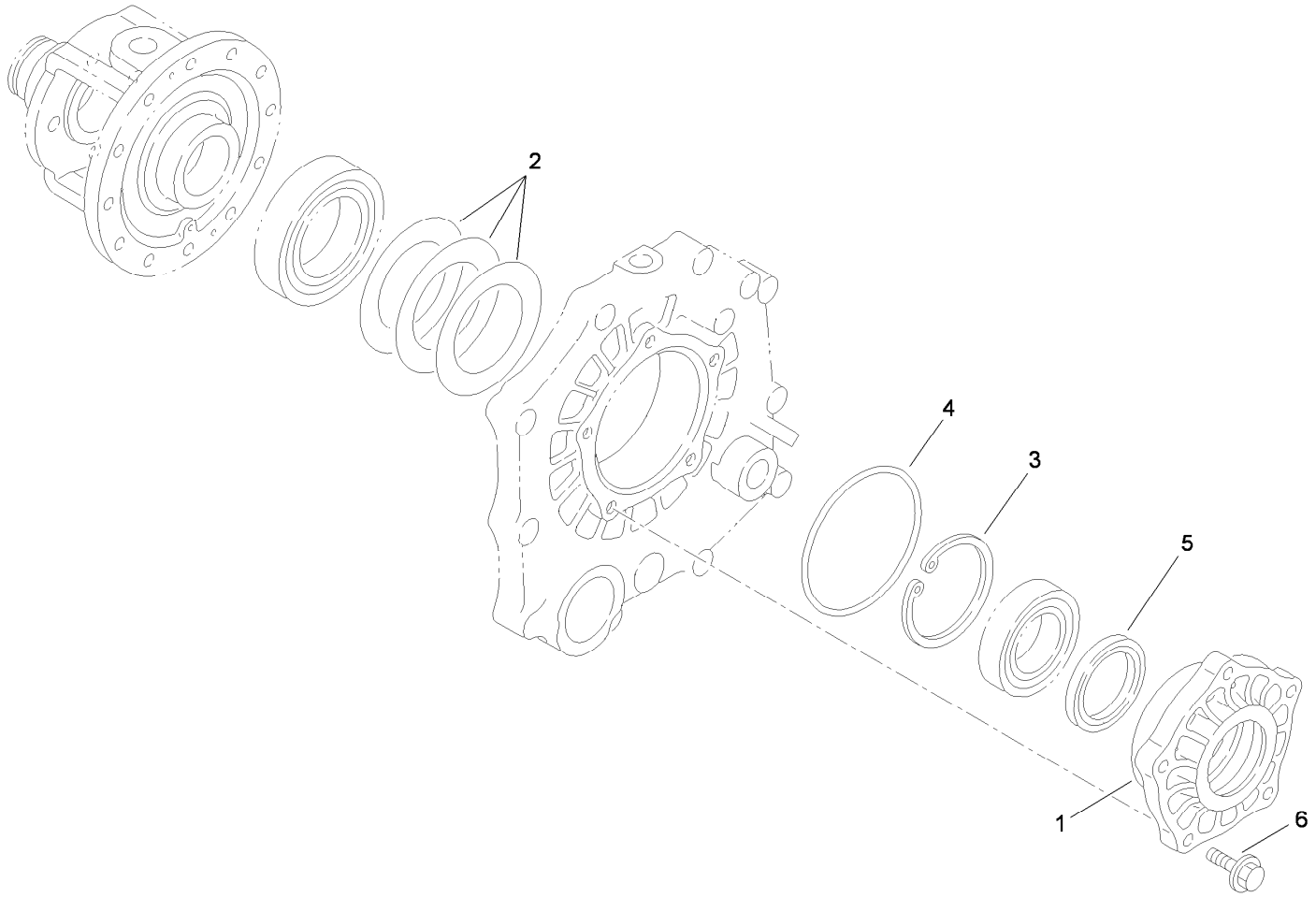


# Differential Carrier Assembly
# Transaxle Assembly No. 115-7783

| *Ref.* | *Part Number* | *Qty.* | *Description* |
|---|---|---|---|
| 1 | 92-0654 | 1 | Carrier-Differential |
| 2 | 92-0809 | 1 | Set-Shim |
| 3 | 92-0760 | 1 | Ring-Snap |
| 4 | 92-0789 | 1 | O-Ring |
| 5 | 92-0793 | 1 | Seal-Oil |
| 6 | 33104-030 | 5 | Screw-HHF |

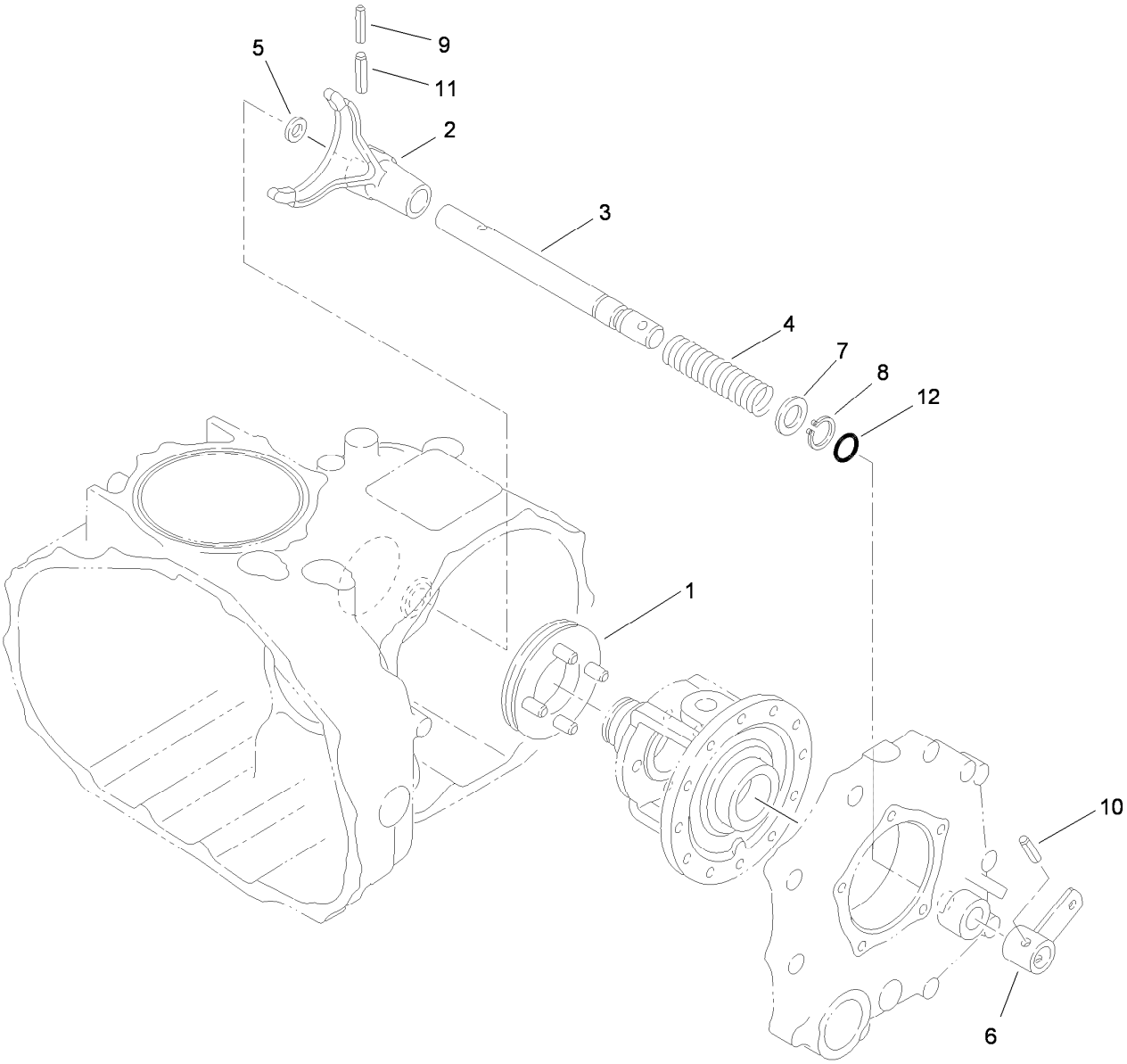


# Differential Lock Assembly
# Transaxle Assembly No. 115-7783

| *Ref.* | *Part Number* | *Qty.* | *Description* |
|---|---|---|---|
| 1 | 92-0730 | 1 | Slider-Differential, Lock |
| 2 | 92-0721 | 1 | Fork-Lock, Differential |
| 3 | 92-0722 | 1 | Shaft-Fork, Lock Differential |
| 4 | 92-0723 | 1 | Spring-Lock, Differential |
| 5 | 92-0744 | 1 | Washer |
| 6 | 92-0724 | 1 | Arm-Lock, Differential |
| 7 | 92-0733 | 1 | Washer |
| 8 | 92-0753 | 1 | Ring-Snap |
| 9 | 92-0768 | 1 | Pin-Roll, Spring |
| 10 | 92-0770 | 1 | Pin-Roll, Spring |
| 11 | 92-0771 | 1 | Pin-Roll, Spring |
| 12 | 92-0787 | 1 | O-Ring |

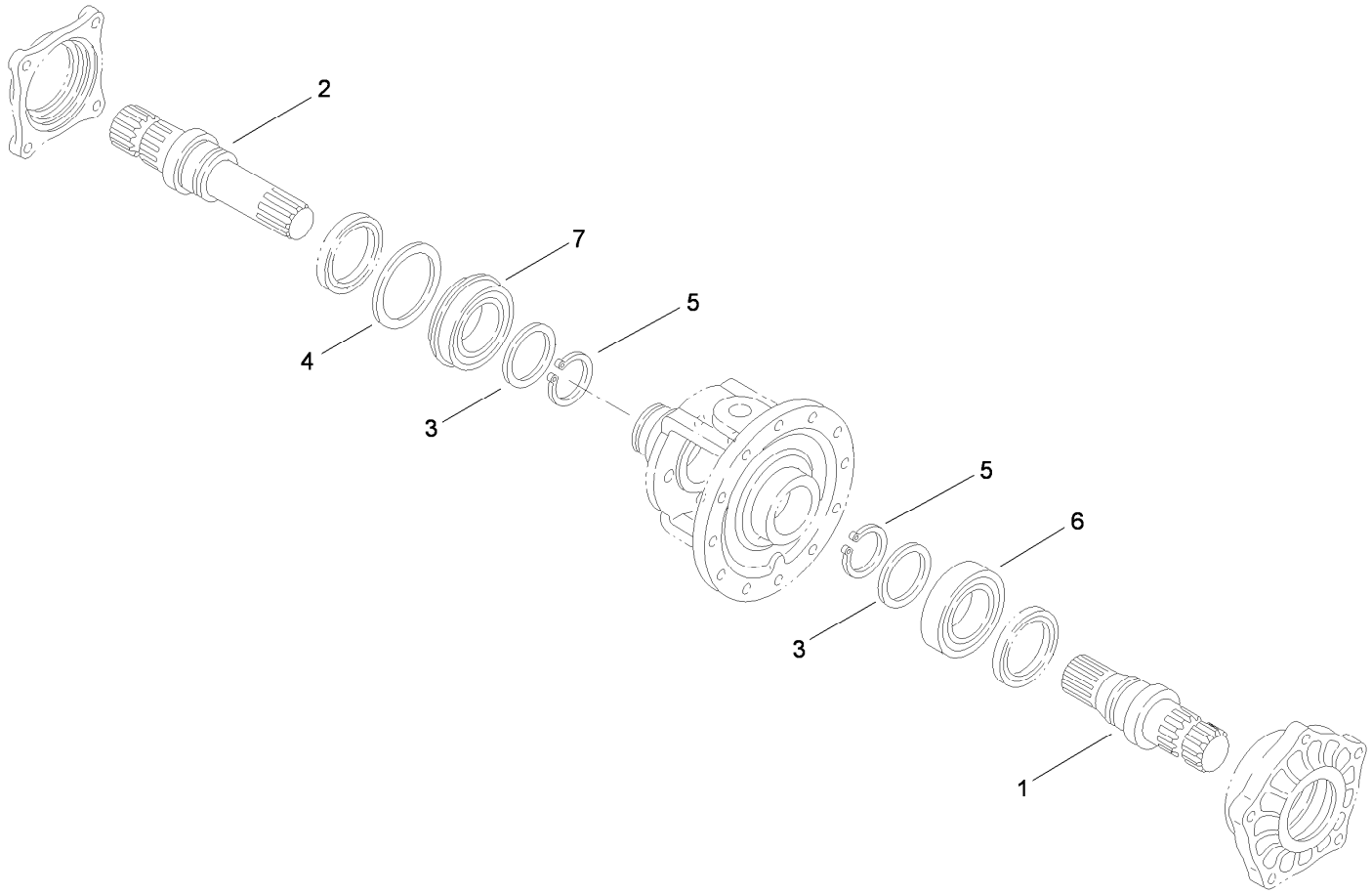


# Axle Shaft Assembly
# Transaxle Assembly No. 115-7783

| *Ref.* | *Part Number* | *Qty.* | *Description* |
|---|---|---|---|
| 1 | 92-0725 | 1 | Shaft-Axle, Left |
| 2 | 92-0726 | 1 | Shaft-Axle, Right |
| 3 | 92-0727 | 2 | Washer |
| 4 | 92-0728 | 1 | Washer |
| 5 | 92-0756 | 2 | Ring-Snap |
| 6 | 92-0775 | 1 | Bearing |
| 7 | 92-0780 | 1 | Bearing |

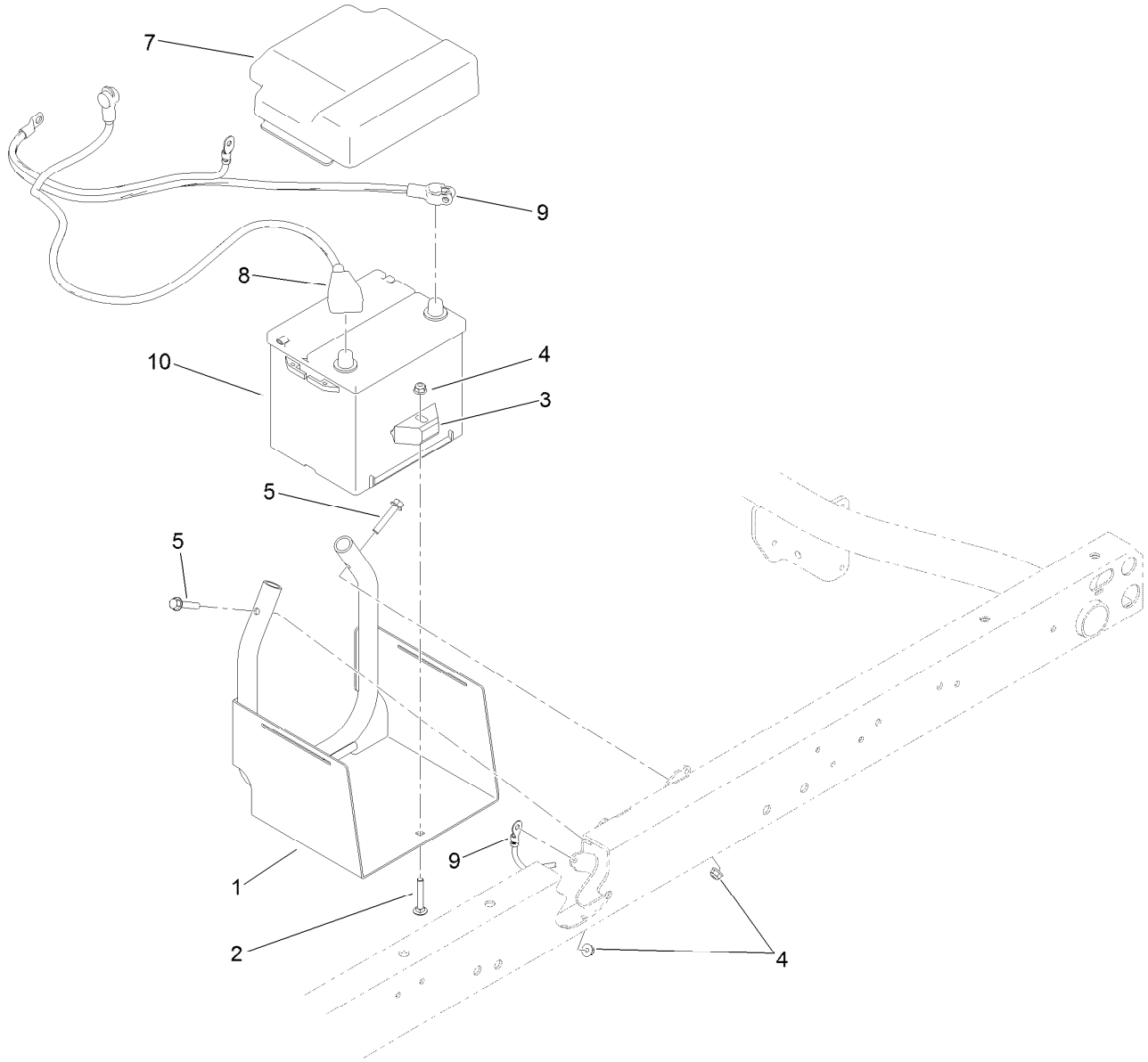


# Battery Assembly

| Ref. | Part Number | Qty. | Description |
|---|---|---|---|
| 1 | 115-2237-03 | 1 | Tray-Battery |
| 2 | 3230-6 | 1 | Bolt-CARR |
| 3 | 66-2490 | 1 | Retainer-Battery |
| 4 | 104-8300 | 3 | Nut-HF, NI |
| 5 | 94-5780 | 2 | Screw-HWH |
| 7 | 119-9496 | 1 | Cover-Battery |
| 8 | 122-0204 | 1 | Cable-Battery, Positive |
| 9 | 122-0120 | 1 | Cable-Battery, Negative |
| 10 | 106-5187 | 1 | Battery-Dry |

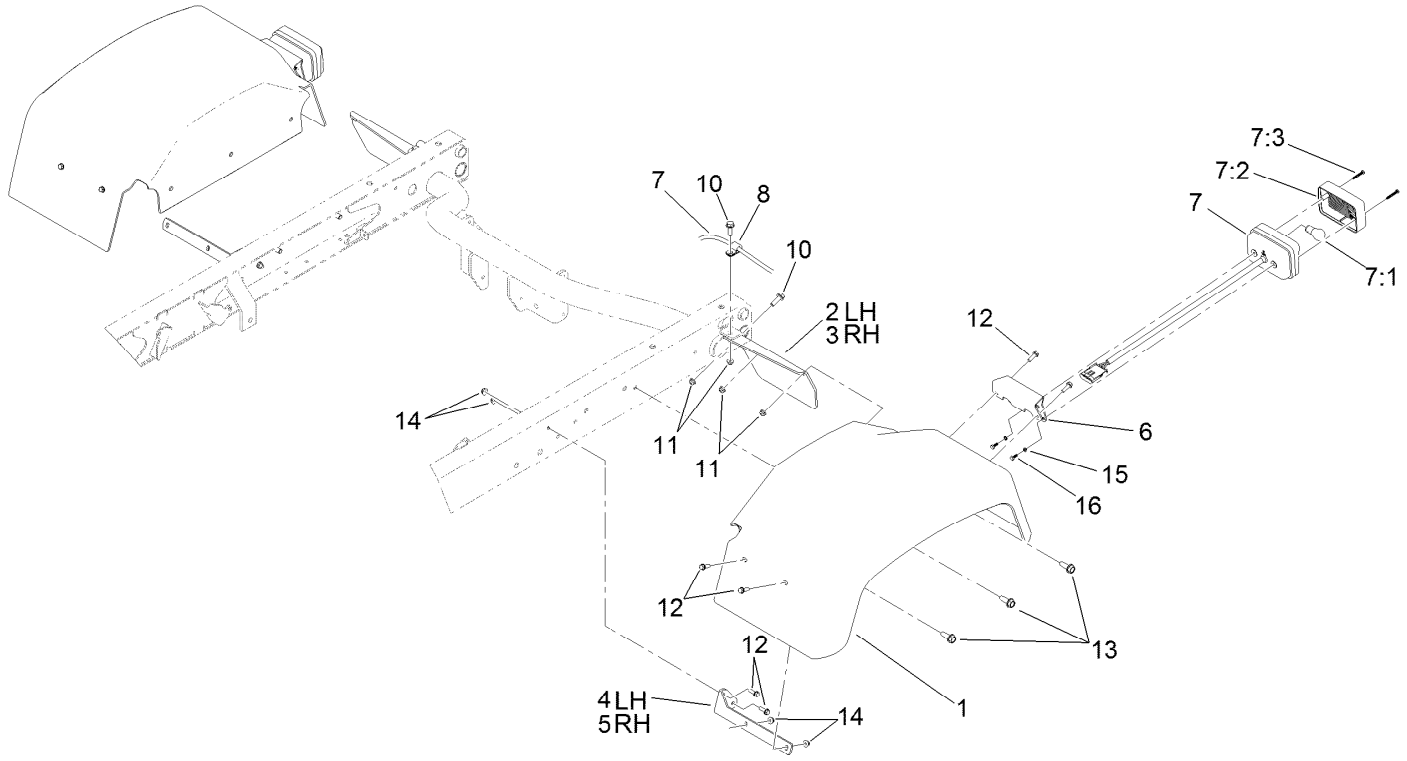


# Tail Light and Fender Assembly

| Ref. | Part Number | Qty. | Description |
|---|---|---|---|
| 1 | 87-6660 | 2 | Fender-Rear |
| 2 | 93-8943-03 | 1 | Bracket-Fender, Rear (LH) |
| 3 | 93-8944-03 | 1 | Bracket-Fender, Rear (RH) |
| 4 | 93-8941-03 | 1 | Bracket-Fender, Front (LH) |
| 5 | 93-8942-03 | 1 | Bracket-Fender, Front (RH) |
| 6 | 121-6269-03 | 2 | Bracket-Light, Tail |
| 7 | 120-4820 | 2 | Light-Tail, Brake |
| 7:1 | 115-7858 | 1 | Bulb-7528 |
| 7:2 | 121-6271 | 1 | Lens-Light, Tail |

| Ref. | Part Number | Qty. | Description |
|---|---|---|---|
| 7:3 | 121-6272 | 2 | Screw-PPH |
| 8 | 2412-93 | 2 | Clamp-R |
| 10 | 3234-17 | 4 | Screw-HHF |
| 11 | 104-8300 | 4 | Nut-HF, NI |
| 12 | 32105-15 | 12 | Screw-HWH |
| 13 | 105-6245 | 6 | Screw-Tapping |
| 14 | 104-7201 | 12 | Nut-HF |
| 15 | 43-5920 | 4 | Washer-Lock, Spring |
| 16 | 121-6320 | 4 | Screw-HH |

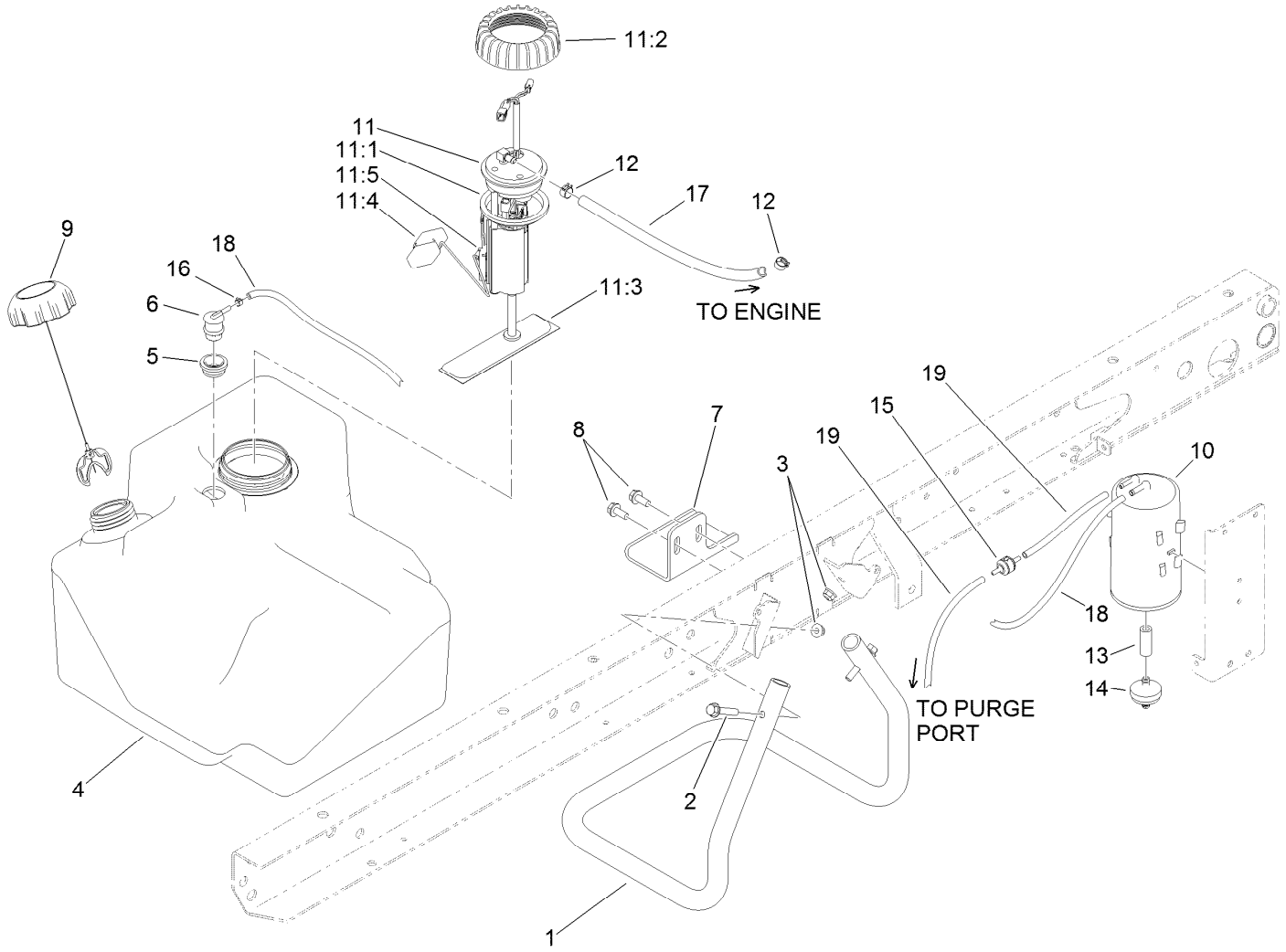


# Fuel System Assembly

| Ref. | Part Number | Qty. | Description |
|---|---|---|---|
| 1 | 115-7767-03 | 1 | Tube-Support |
| 2 | 94-5780 | 2 | Screw-HWH |
| 3 | 104-8300 | 2 | Nut-HF, NI |
| 4 | 115-7700 | 1 | Tank-Fuel |
| 5 | 114-0284 | 1 | Grommet |
| 6 | 114-0285 | 1 | Valve-Rollover |
| 7 | 114-8404 | 1 | Plate-Retainer |
| 8 | 32144-11 | 2 | Screw-Thd Roll, HWH |
| 9 | 115-7788 | 1 | Cap-Fuel |
| 10 | 115-2251 | 1 | Canister-Carbon |
| 11 | 115-2399 | 1 | Pump-Fuel |
| 11:1 | 115-2163 | 1 | Gasket-Pump, Fuel |

| Ref. | Part Number | Qty. | Description |
|---|---|---|---|
| 11:2 | 115-2162 | 1 | Cap-Pump, Fuel |
| 11:3 | 115-7818 | 1 | Fuel Filter ASM |
| 11:4 | 120-4812 | 1 | Float |
| 11:5 | 127-8691 | 1 | Sender-Fuel Level |
| 12 | 92-2379 | 2 | Clamp-Hose |
| 13 | 106-5317 | 1 | Hose-Fuel |
| 14 | 115-7854 | 1 | Filter-Fuel, Inline |
| 15 | 115-7868 | 1 | Valve-Check, Vacuum |
| 16 | 2412-146 | 1 | Clamp-Hose |
| 17 | 109-0287 | 1 | Hose-Fuel |
| 18 | 110-3254 | 1 | Hose-Fuel |
| 19 | 115-7871 | 2 | Hose-Fuel |

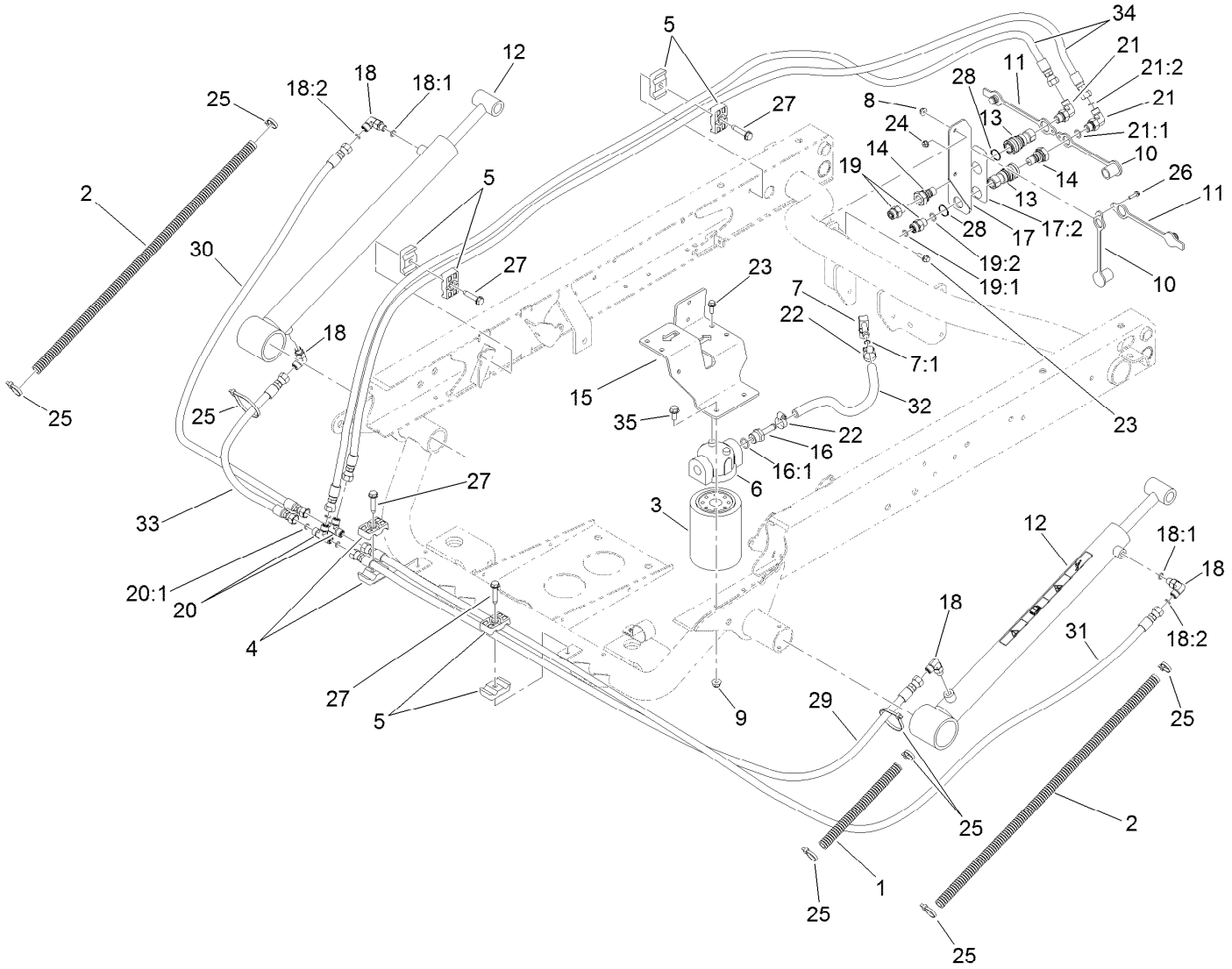


# Hydraulic Lift Cylinder Assembly

| Ref. | Part Number | Qty. | Description |
|---|---|---|---|
| 1 | 24-7922 | 1 | Conduit-Convoluted, Split |
| 2 | 24-7923 | 2 | Conduit-Convoluted, Split |
| 3 | 54-0110 | 1 | Filter-Oil, Transmission |
| 4 | 56-7971 | 2 | Clamp-Tube |
| 5 | 56-7976 | 6 | Clamp-Tube |
| 6 | 87-8780 | 1 | Head-Filter |
| 7 | 100-4887 | 1 | Fitting-Elbow, 90 |
| 7:1 | 237-42 | 1 | O-Ring |
| 8 | 104-7201 | 2 | Nut-HF |
| 9 | 104-8300 | 2 | Nut-HF, NI |
| 10 | 106-7881 | 2 | Cap-Dust, HYD |
| 11 | 106-7882 | 2 | Plug-Dust, HYD |
| 12 | 106-7939 | 2 | HYD Cylinder ASM |
| 13 | 106-7968 | 2 | Coupler-Quick, Female |
| 14 | 106-7969 | 2 | Coupler-Quick, Male |
| 15 | 115-2168-03 | 1 | Bracket-Filter |
| 16 | 115-2231 | 1 | Fitting-STR |
| 16:1 | 237-79 | 1 | O-Ring |
| 17 | 115-7715 | 1 | Coupler Bracket ASM |
| 17:2 | 115-7723 | 1 | Decal-Disconnect, Quick |
| 18 | 340-132 | 4 | Fitting-Elbow, 90 DEG |

| Ref. | Part Number | Qty. | Description |
|---|---|---|---|
| 18:1 | 237-78 | 1 | O-Ring |
| 18:2 | 237-21 | 1 | O-Ring |
| 19 | 340-2 | 2 | Fitting-Straight |
| 19:1 | 237-22 | 1 | O-Ring |
| 19:2 | 237-42 | 1 | O-Ring |
| 20 | 340-21 | 2 | Fitting |
| 20:1 | 237-21 | 3 | O-Ring |
| 21 | 340-82 | 2 | Fitting-Elbow, 90 DEG |
| 21:1 | 237-42 | 1 | O-Ring |
| 21:2 | 237-21 | 1 | O-Ring |
| 22 | 2412-36 | 2 | Clamp-Hose |
| 23 | 3234-4 | 4 | Screw-HHF |
| 24 | 3290-148 | 1 | Nut-HF |
| 25 | 3290-379 | 6 | Tie-Cable |
| 26 | 32105-13 | 1 | Screw-HWH |
| 27 | 32144-57 | 4 | Screw |
| 28 | 32151-83 | 2 | Ring-Snap |
| 29 | 115-7711 | 1 | Hose-HYD |
| 30 | 108-6508 | 1 | Hose-HYD |
| 31 | 104-3716 | 1 | Hose-HYD |
| 32 | 115-2228 | 1 | Hose-HYD |

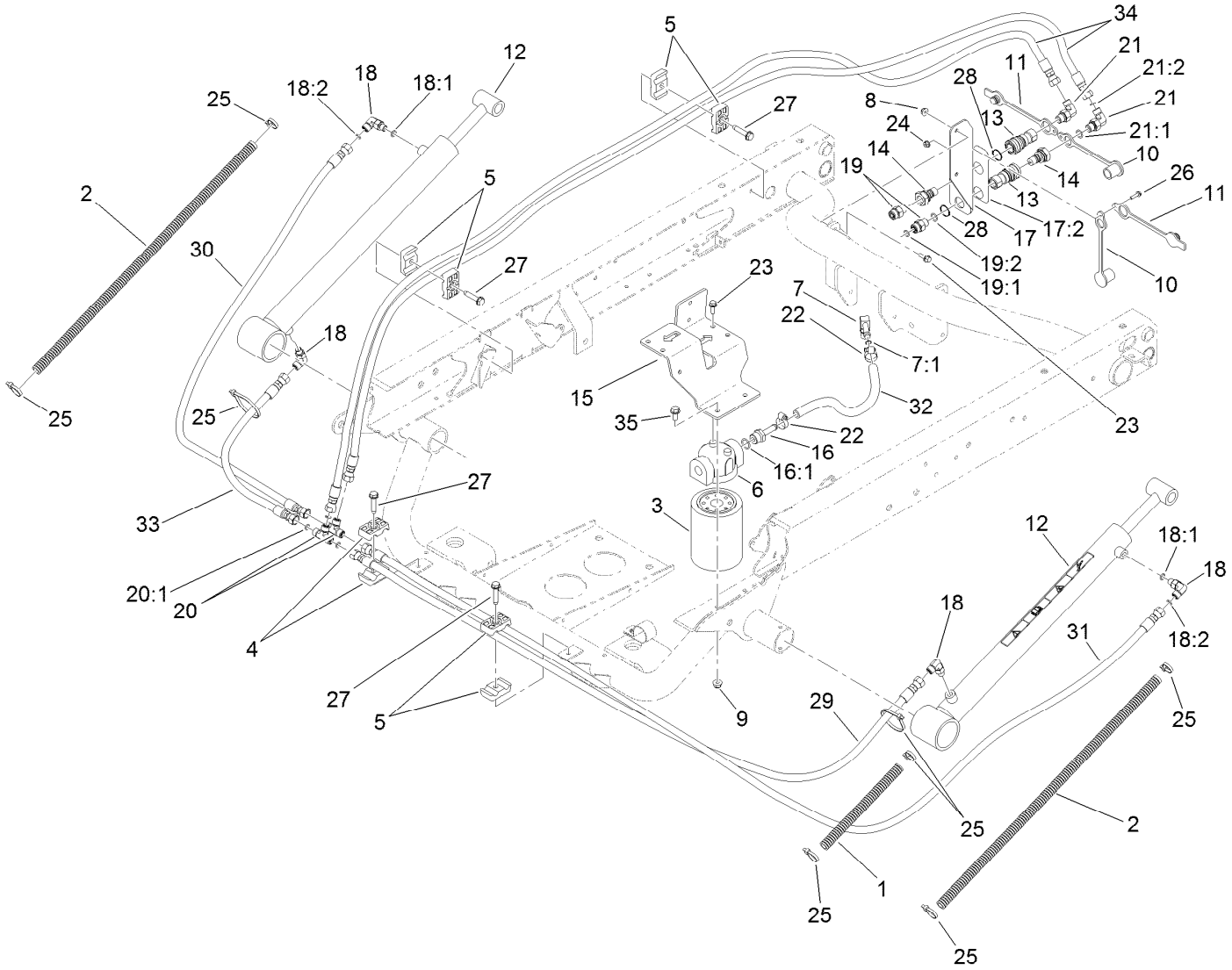


# Hydraulic Lift Cylinder Assembly (continued)

| Ref. | Part Number | Qty. | Description |
|---|---|---|---|
| 33 | 110-0931 | 1 | Hose-HYD |

| Ref. | Part Number | Qty. | Description |
|---|---|---|---|
| 34 | 106-3680 | 2 | Hose-HYD |
| 35 | 3234-5 | 2 | Screw-HHF |

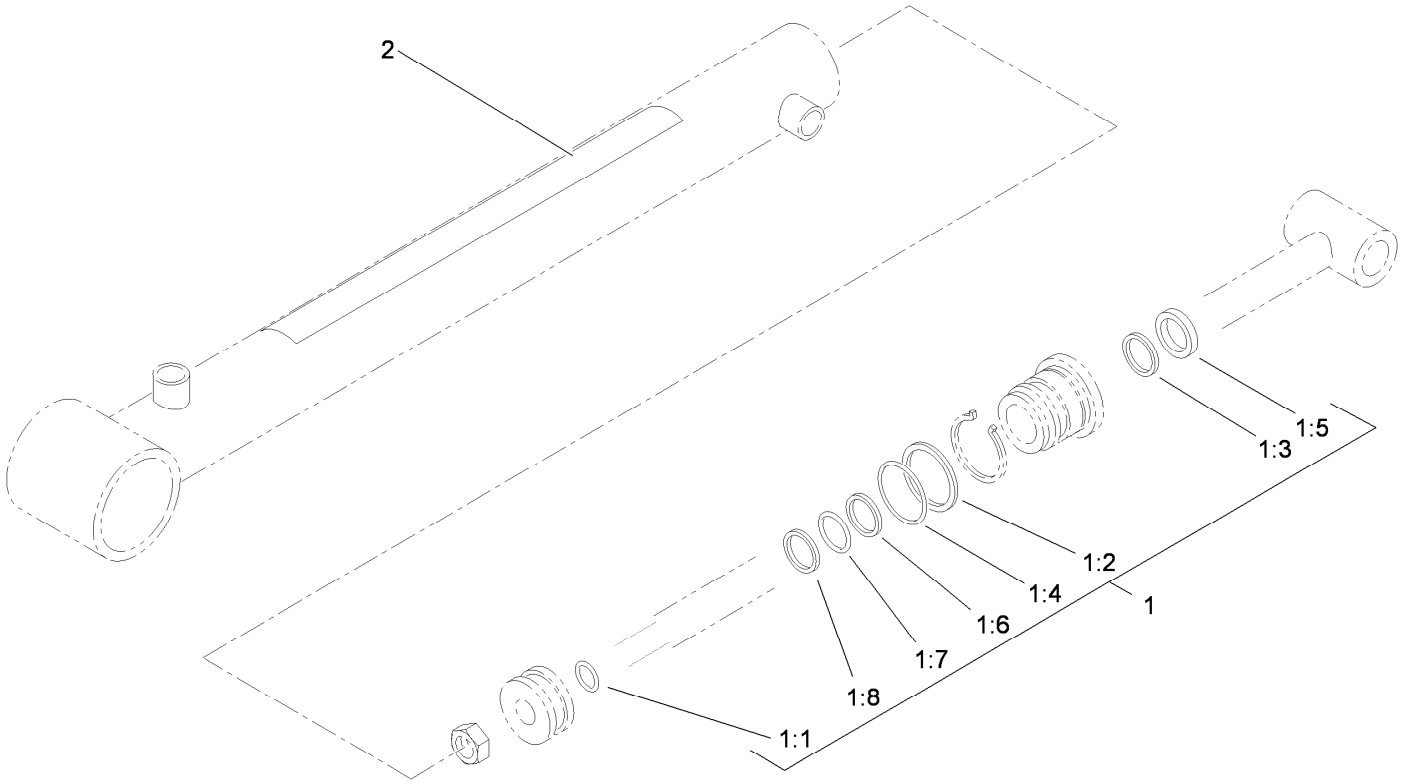


# Hydraulic Cylinder Assembly No. 106-7939

| *Ref.* | *Part Number* | *Qty.* | *Description* |
|---|---|---|---|
| 1 | 106-7941 | 1 | Seal Kit |
| 1:1 | | 1 | O-Ring ● |
| 1:2 | | 1 | O-Ring ● |
| 1:3 | | 1 | Seal ● |
| 1:4 | | 1 | Back-Up ● |
| 1:5 | | 1 | Wiper ● |
| 1:6 | | 1 | Seal ● |
| 1:7 | | 1 | O-Ring ● |
| 1:8 | | 1 | Ring-Wear ● |
| 2 | 93-9852 | 1 | Decal-Warning |

● Not serviced separately

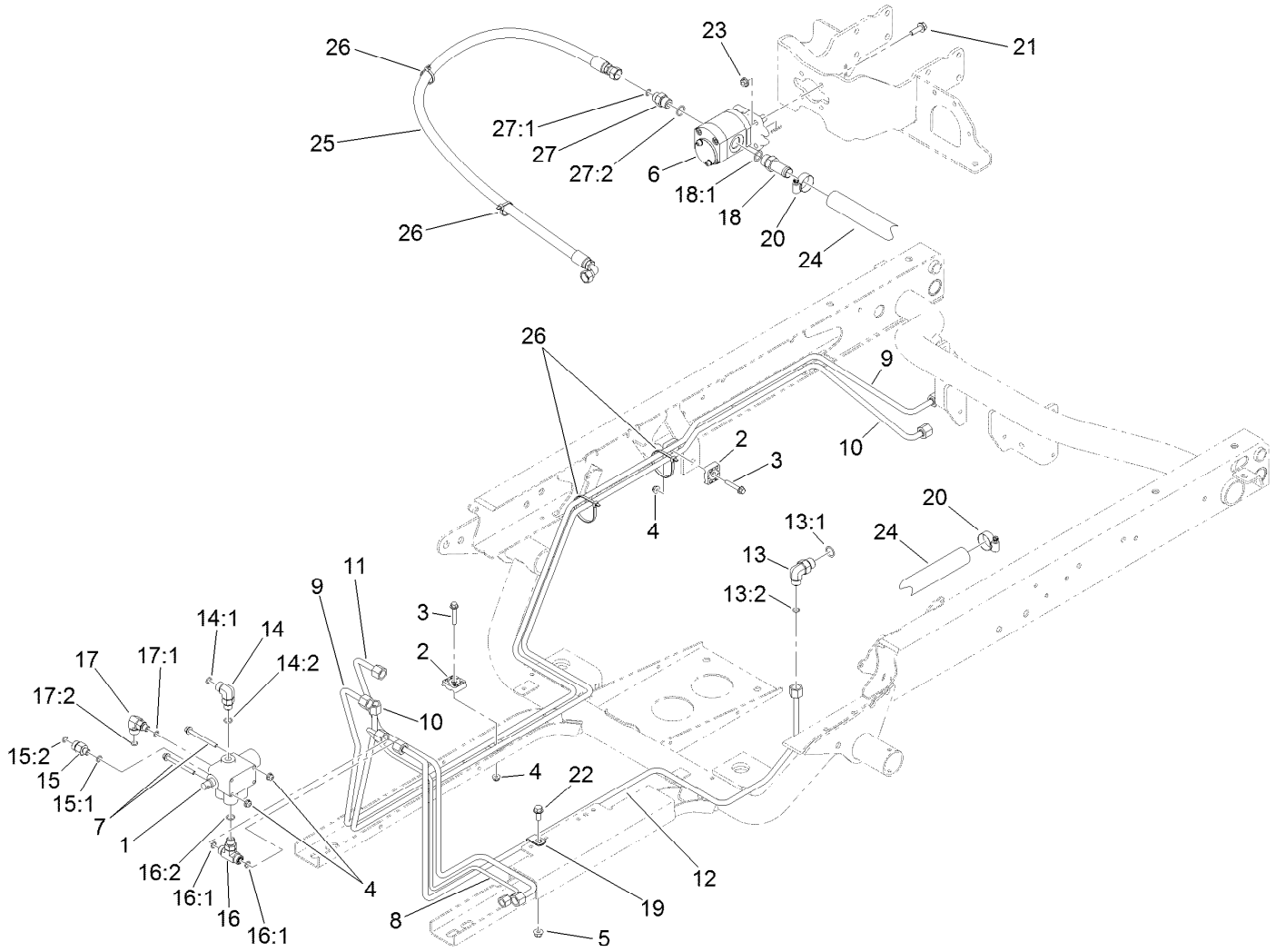


# Main Hydraulic Pump and Lift Valve Assembly

| Ref. | Part Number | Qty. | Description |
|---|---|---|---|
| 1 | 43-1950 | 1 | HYD Control Valve ASM |
| 2 | 56-7973 | 4 | Clamp-Tube |
| 3 | 94-5781 | 2 | Screw-HHF |
| 4 | 104-7201 | 4 | Nut-HF |
| 5 | 104-8300 | 1 | Nut-HF, NI |
| 6 | 114-8302 | 1 | HYD Pump ASM |
| 7 | 114-8410 | 2 | Screw-HHF |
| 8 | 115-2216 | 1 | Tube-HYD |
| 9 | 115-2217 | 1 | Tube-HYD |
| 10 | 115-2218 | 1 | Tube-HYD |
| 11 | 115-2223 | 1 | Tube-HYD |
| 12 | 115-2224 | 1 | Tube-HYD |
| 13 | 340-18 | 1 | Fitting-HYD, 90 DEG |
| 13:1 | 237-79 | 1 | O-Ring |
| 13:2 | 237-22 | 1 | O-Ring |
| 14 | 340-77 | 1 | Fitting-Elbow, 90 DEG |
| 14:1 | 237-22 | 1 | O-Ring |
| 14:2 | 237-42 | 1 | O-Ring |
| 15 | 340-88 | 1 | Fitting-Straight |
| 15:1 | 237-22 | 1 | O-Ring |

| Ref. | Part Number | Qty. | Description |
|---|---|---|---|
| 15:2 | 237-78 | 1 | O-Ring |
| 16 | 340-94 | 1 | Adapter |
| 16:1 | 237-22 | 2 | O-Ring |
| 16:2 | 237-42 | 1 | O-Ring |
| 17 | 340-97 | 1 | Fitting-Elbow, 90 DEG |
| 17:1 | 237-22 | 1 | O-Ring |
| 17:2 | 237-78 | 1 | O-Ring |
| 18 | 354-136 | 1 | Fitting-STR |
| 18:1 | 237-80 | 1 | O-Ring |
| 19 | 2412-113 | 1 | Clamp-R |
| 20 | 2412-129 | 2 | Clamp-Hose |
| 21 | 3234-17 | 4 | Screw-HHF |
| 22 | 3234-5 | 1 | Screw-HHF |
| 23 | 32128-20 | 4 | Nut-HF |
| 24 | 87-3670 | 1 | Hose-Suction |
| 25 | 121-6283 | 1 | Hose-HYD |
| 26 | 3290-379 | 4 | Tie-Cable |
| 27 | 340-3 | 1 | Fitting-Straight |
| 27:1 | 237-22 | 1 | O-Ring |
| 27:2 | 237-79 | 1 | O-Ring |

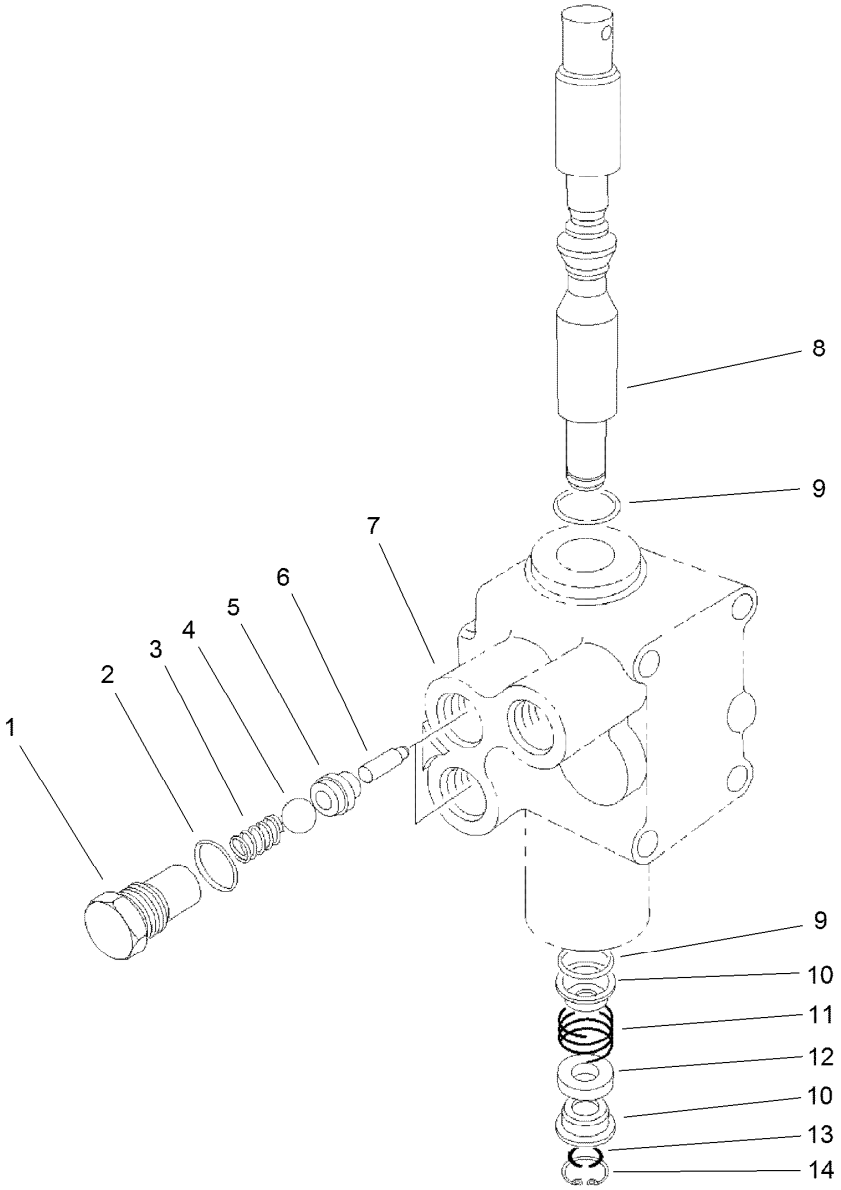


# Control Valve Assembly No. 43-1950

| Ref. | Part Number | Qty. | Description |
|---|---|---|---|
| 1 | 22-8330 | 2 | Plug |
| 2 | 237-42 | 2 | O-Ring |
| 3 | 22-8340 | 2 | Spring |
| 4 | 22-8350 | 2 | Ball |
| 5 | 22-8370 | 2 | Seat-Valve |
| 6 | 22-8360 | 2 | Pin |
| 7 | | 1 | Body ● |
| 8 | 22-8420 | 1 | Spool |
| 9 | 22-8500 | 2 | O-Ring |
| 10 | 22-8380 | 2 | Retainer |
| 11 | 22-8410 | 1 | Spring |
| 12 | 23-3030 | 1 | Spacer |
| 13 | 22-8480 | 1 | Ring-Snap |
| 14 | 22-8490 | 1 | Ring-Snap |

● Not serviced separately

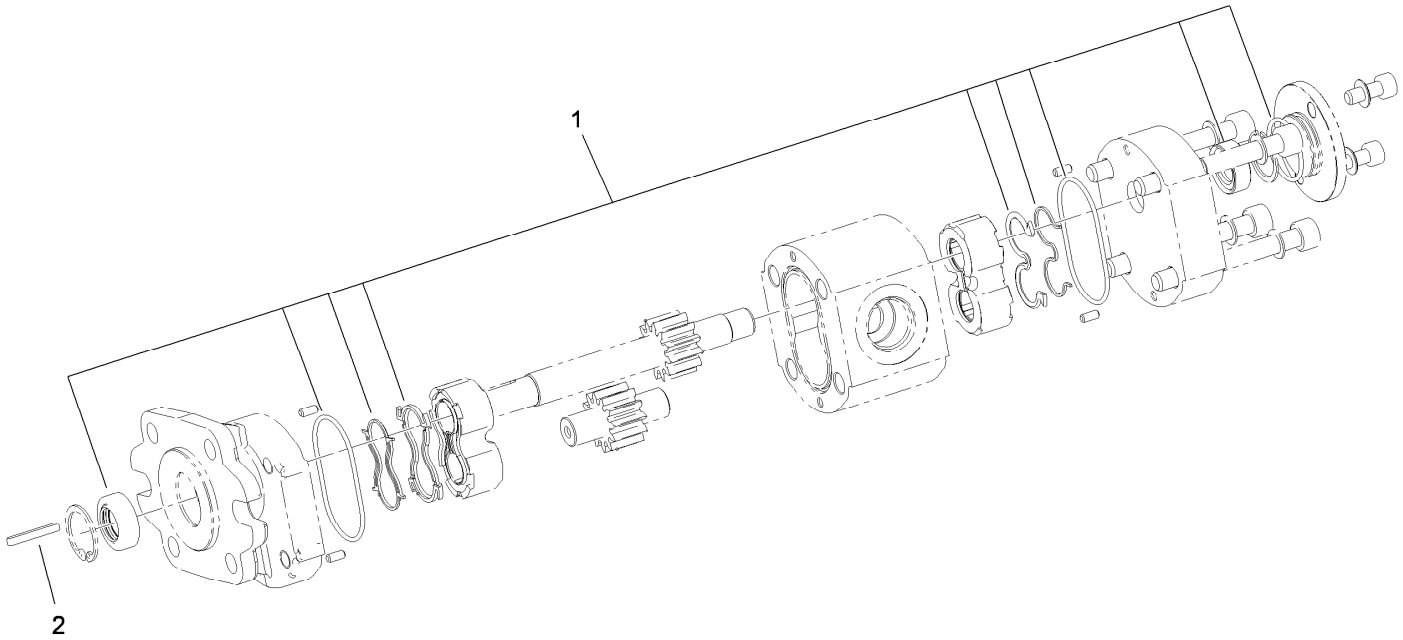


# Hydraulic Gear Pump Assembly No. 114-8302

| *Ref.* | *Part Number* | *Qty.* | *Description* |
|---|---|---|---|
| 1 | 115-8696 | 1 | Seal Kit |
| 2 | 115-7855 | 1 | Key-Square |

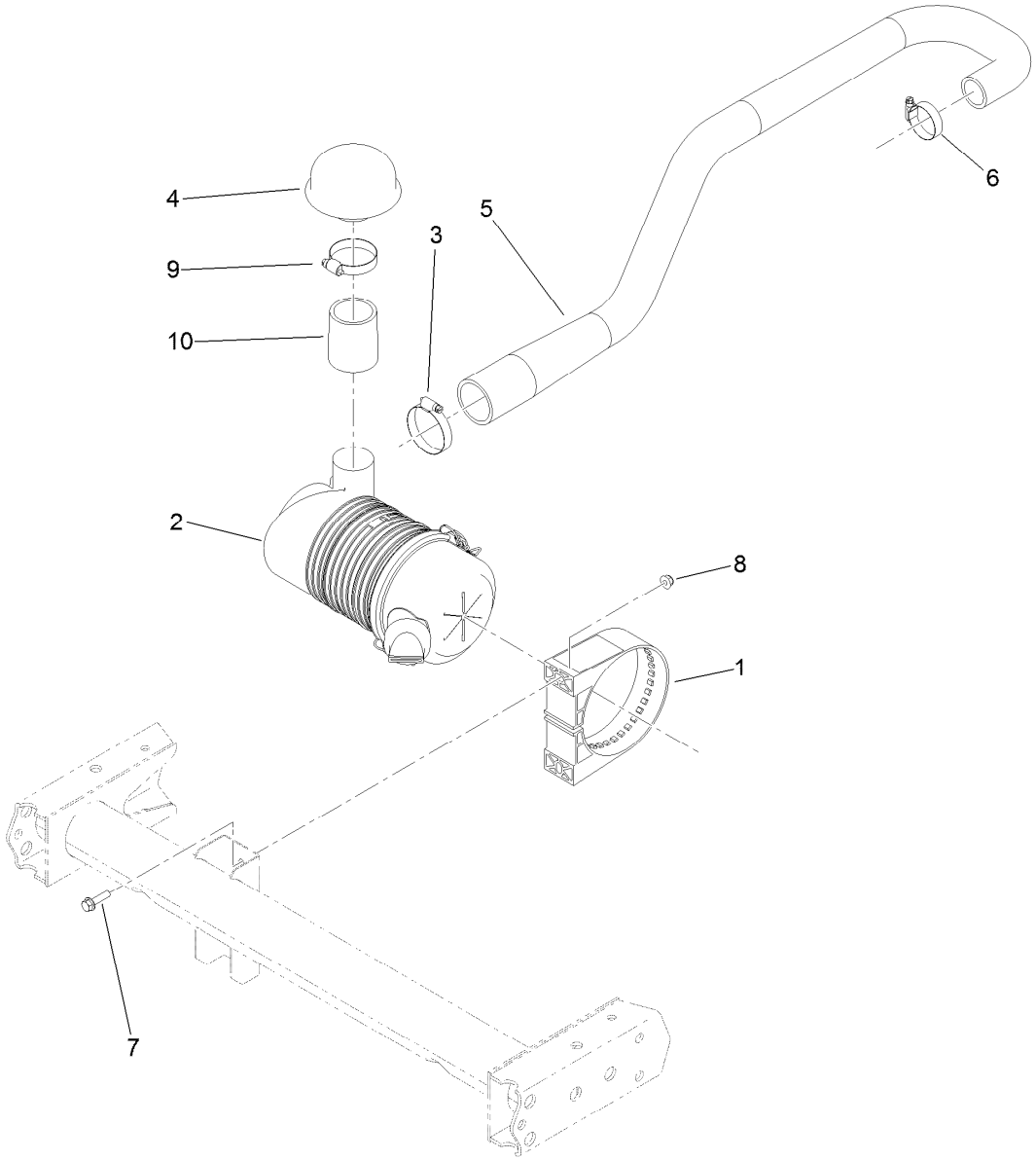


# Air Cleaner Assembly

| Ref. | Part Number | Qty. | Description |
|---|---|---|---|
| 1 | 98-4525 | 1 | Bracket-Cleaner, Air |
| 2 | 106-5277 | 1 | Air Cleaner ASM |
| 3 | 2412-130 | 1 | Clamp-Hose |
| 4 | 46-7510 | 1 | Hood-Inlet, Air |
| 5 | 120-5098 | 1 | Hose-Air Intake, EFI |
| 6 | 2412-3 | 1 | Clamp-Hose |
| 7 | 3234-36 | 2 | Screw-HHF |
| 8 | 104-8300 | 2 | Nut-HF, NI |
| 9 | 2412-139 | 1 | Clamp-Hose |
| 10 | 121-9674 | 1 | Hose-Intake, Air |

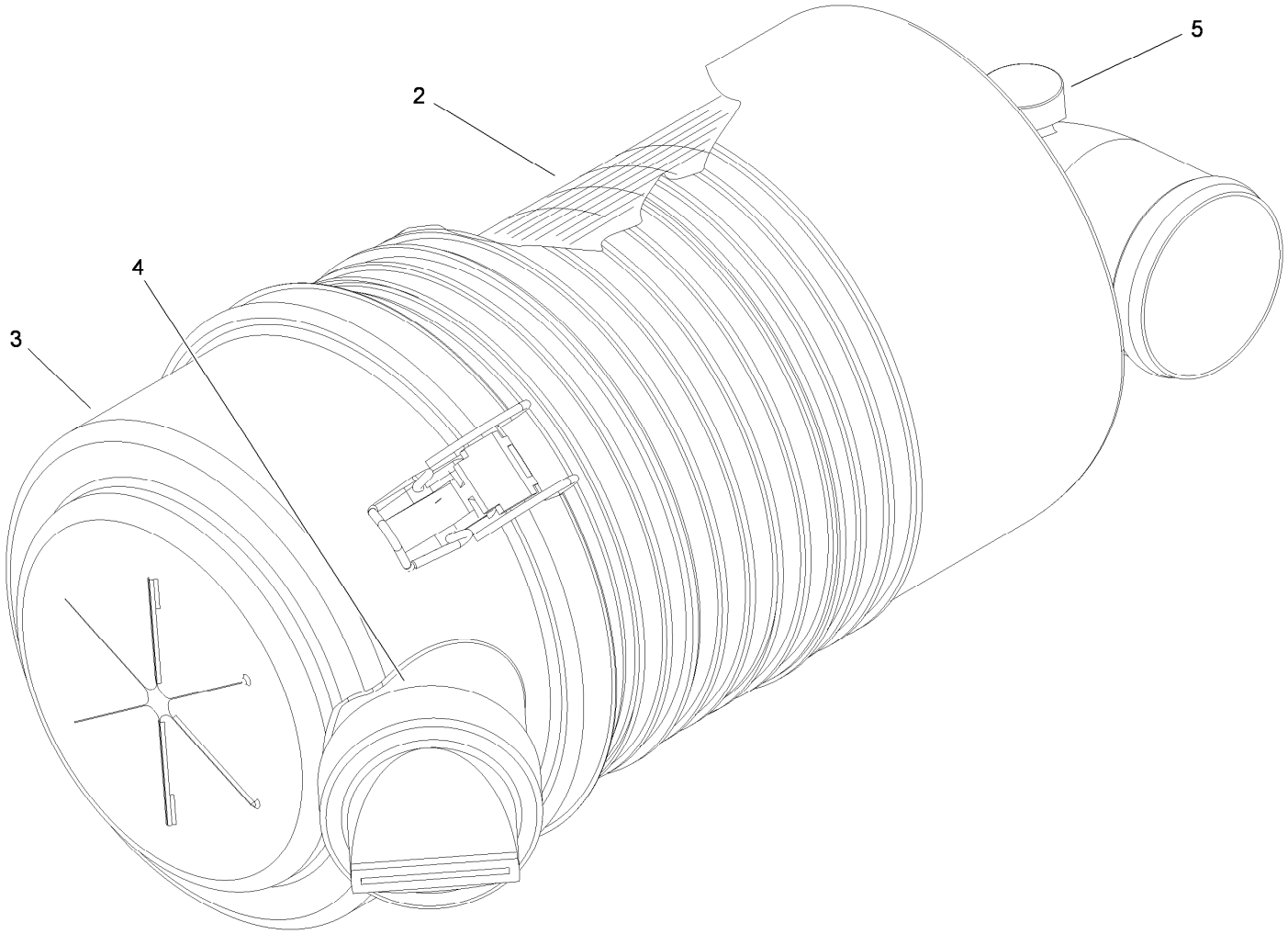


# Air Cleaner Assembly No. 106-5277

| *Ref.* | *Part Number* | *Qty.* | *Description* |
|---|---|---|---|
| 2 | 108-3810 | 1 | Filter-Air |
| 3 | 98-9771 | 1 | Cover ASM |
| 4 | 87-9400 | 1 | Valve-Vacuator |
| 5 | 285-17 | 1 | Plug-Pipe |

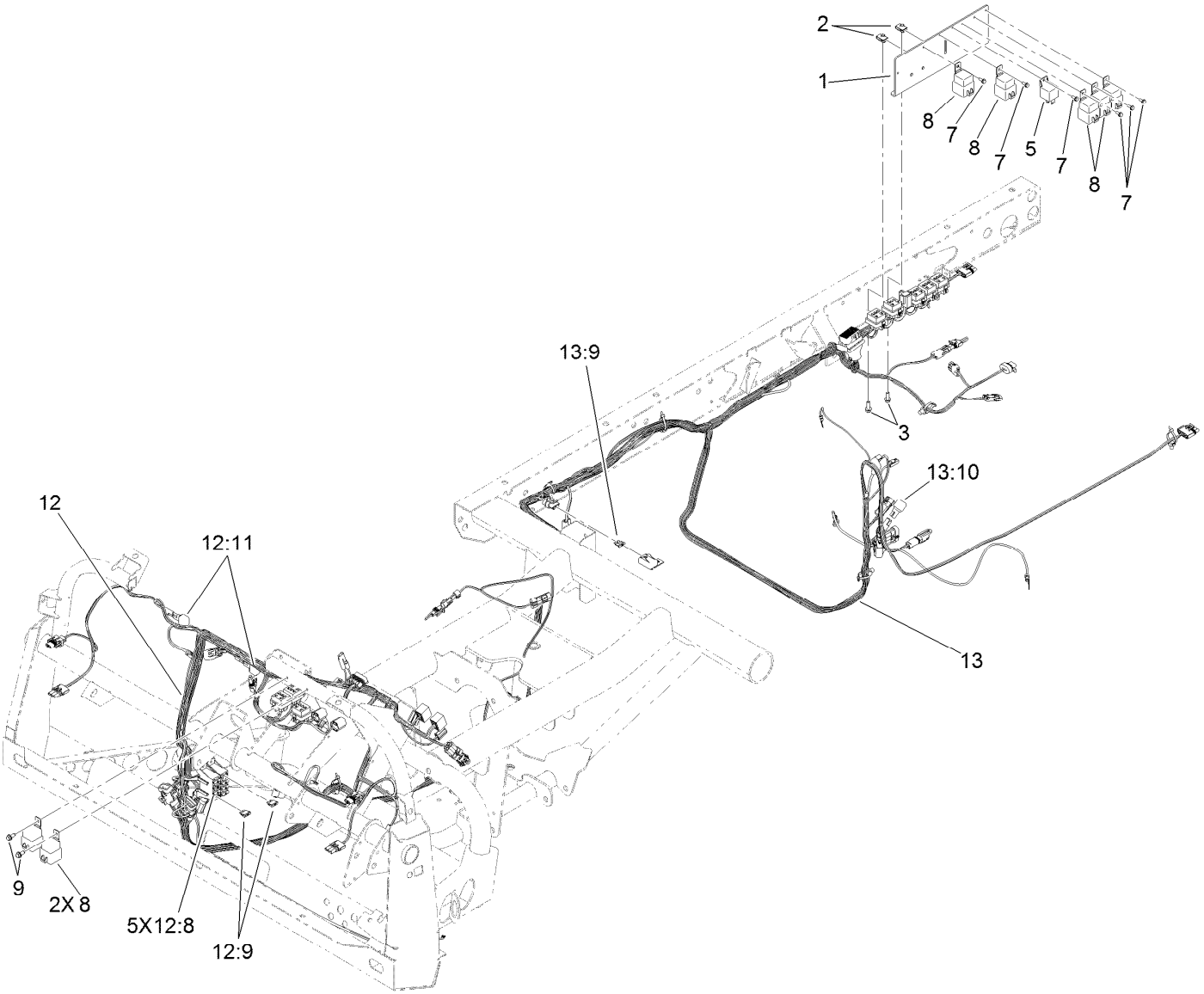


# Front and Rear Wire Harness Assembly

| Ref. | Part Number | Qty. | Description |
|---|---|---|---|
| 1 | 115-2225 | 1 | Bracket-Relay |
| 2 | 107069 | 2 | Clip |
| 3 | 3234-4 | 2 | Screw-HHF |
| 5 | 99-7435 | 1 | Relay |
| 7 | 32144-112 | 6 | Screw-HWH |
| 8 | 99-7430 | 7 | Relay-Mini |
| 9 | 32144-10 | 2 | Screw-HWH |
| 12 | 122-0221 | 1 | Harness-Wire, Front |
| 12:8 | 218-578 | 5 | Fuse-Blade, 10 Amp |
| 12:9 | 109355 | 2 | Fuse-Blade, 15 Amp |
| 12:11 | 100-4918 | 2 | Diode |
| 13 | 120-3976 | 1 | Harness-Wire, Rear |
| 13:9 | 109103 | 1 | Fuse-Blade, 30 Amp |
| 13:10 | 100-4918 | 1 | Diode |

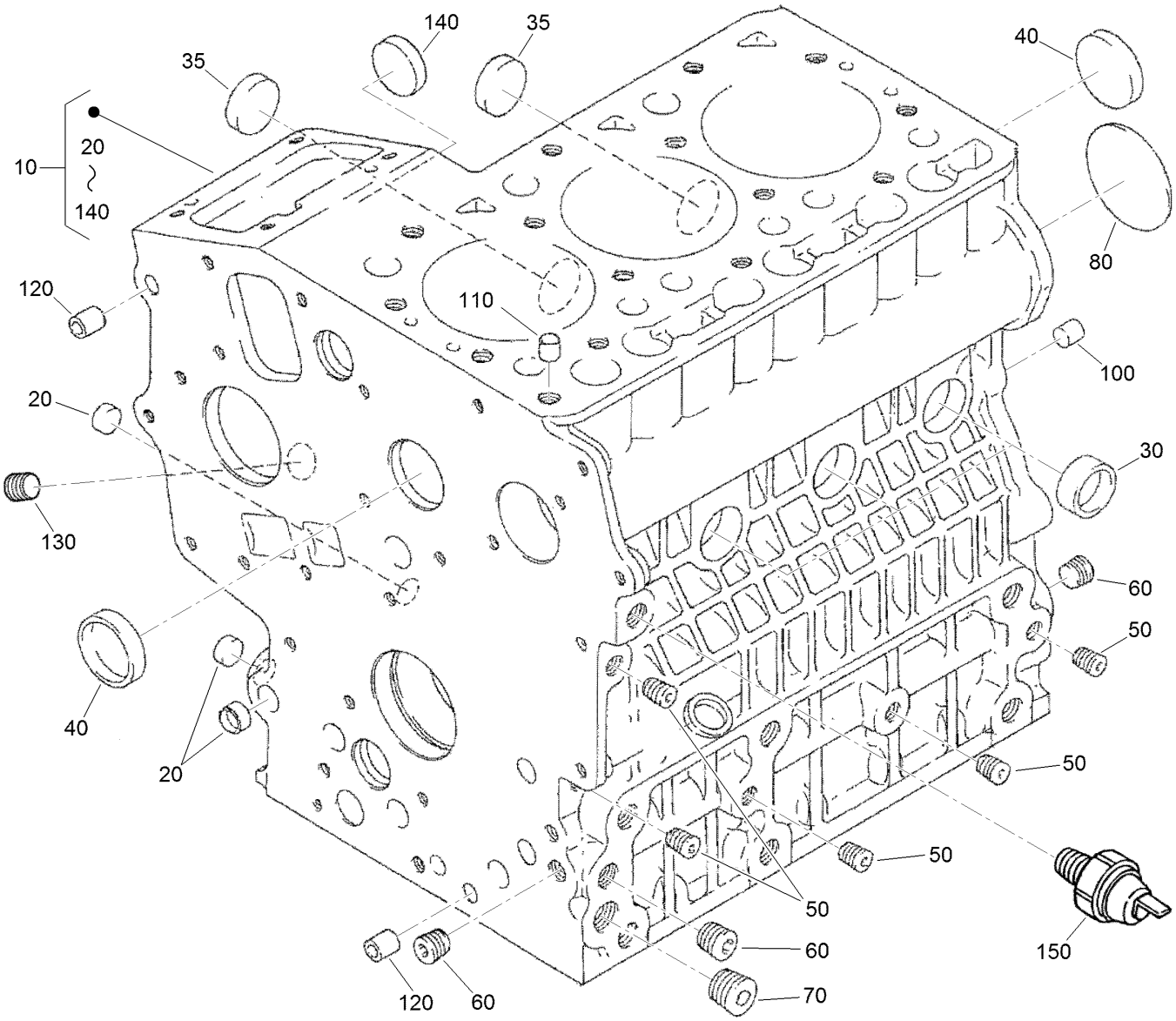


# Crankcase Assembly

| Ref. | Part Number | Qty. | Description |
|---|---|---|---|
| 10 | 125-9060 | 1 | Crankcase ASM |
| 20 | 100-2019 | 3 | Cap-Sealing |
| 30 | 100-2020 | 3 | Cap-Sealing |
| 35 | 110-3702 | 2 | Cap-Sealing |
| 40 | 98-9398 | 2 | Cap-Sealing |
| 50 | 98-7540 | 5 | Plug |
| 60 | 98-7487 | 3 | Plug |
| 70 | 98-7488 | 1 | Plug |
| 80 | 100-1851 | 1 | Plug-Expansion |
| 100 | 98-9377 | 2 | Pin-Straight |
| 110 | 98-7506 | 1 | Pin-Pipe |
| 120 | 100-2051 | 2 | Pin-Pipe |
| 130 | 98-7488 | 1 | Plug |
| 140 | 100-1991 | 1 | Cover-Fuel, Camshaft |
| 150 | 98-9416 | 1 | Switch-Oil |

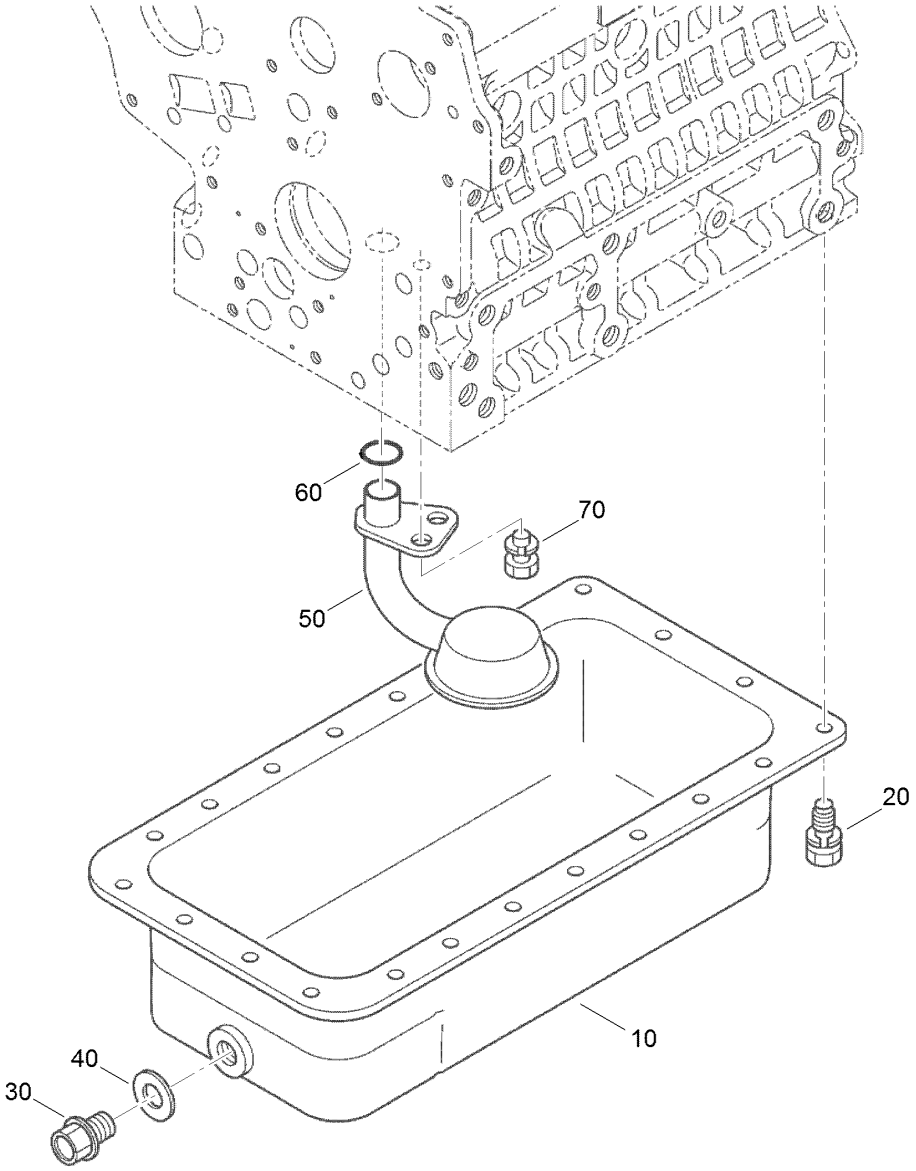


# Oil Pan Assembly

| Ref. | Part Number | Qty. | Description |
|---|---|---|---|
| 10 | 125-9056 | 1 | Oil Pan ASM |
| 20 | 98-9350 | 22 | Bolt |
| 30 | 114-8151 | 1 | Plug-Drain |
| 40 | 98-7524 | 1 | Gasket |
| 50 | 125-9052 | 1 | Tube-Pick Up, Oil |
| 60 | 105-3776 | 1 | O-Ring |
| 70 | 100-9195 | 1 | Bolt |

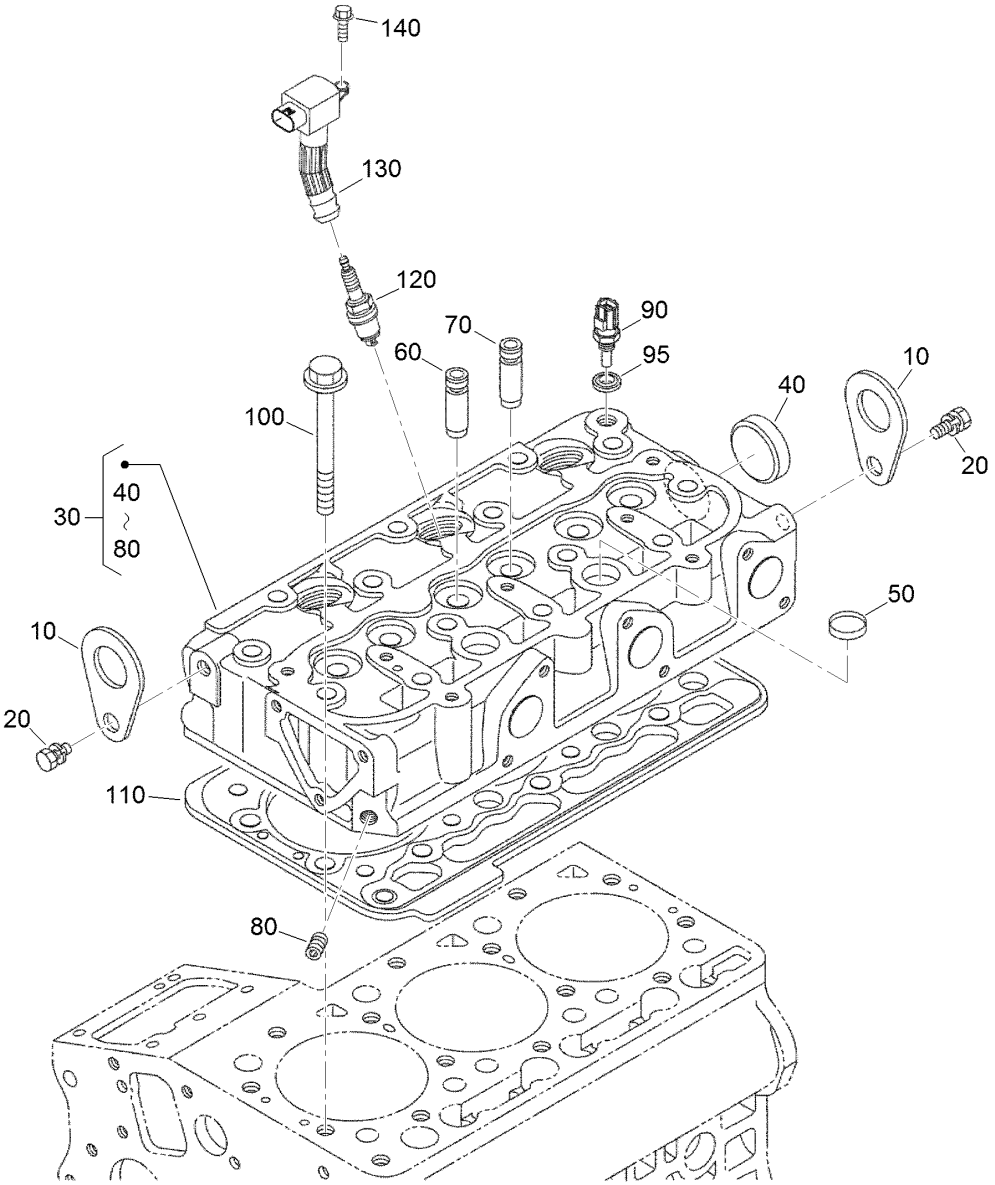


# Cylinder Head Assembly

| Ref. | Part Number | Qty. | Description |
|---|---|---|---|
| 10 | 98-7531 | 2 | Hook-Engine |
| 20 | 98-7526 | 2 | Bolt |
| 30 | 125-9119 | 1 | Cylinder Head ASM |
| 40 | 105-3705 | 1 | Cap-Sealing |
| 50 | 98-9389 | 2 | Cap-Sealing |
| 60 | 100-1882 | 3 | Guide-Valve, Inlet |
| 70 | 100-1883 | 3 | Guide-Valve, Exhaust |
| 80 | 98-7540 | 1 | Plug |
| 90 | 125-9102 | 1 | Sensor-Temperature, Water |
| 95 | 125-9096 | 1 | Gasket |
| 100 | 100-1820 | 14 | Bolt-Head, Cylinder |
| 110 | 125-9113 | 1 | Gasket-Head |
| 120 | 125-9139 | 3 | Spark Plug |
| 130 | 125-9145 | 3 | Coil-Ignition |
| 140 | 99-8363 | 3 | Bolt-Flange |

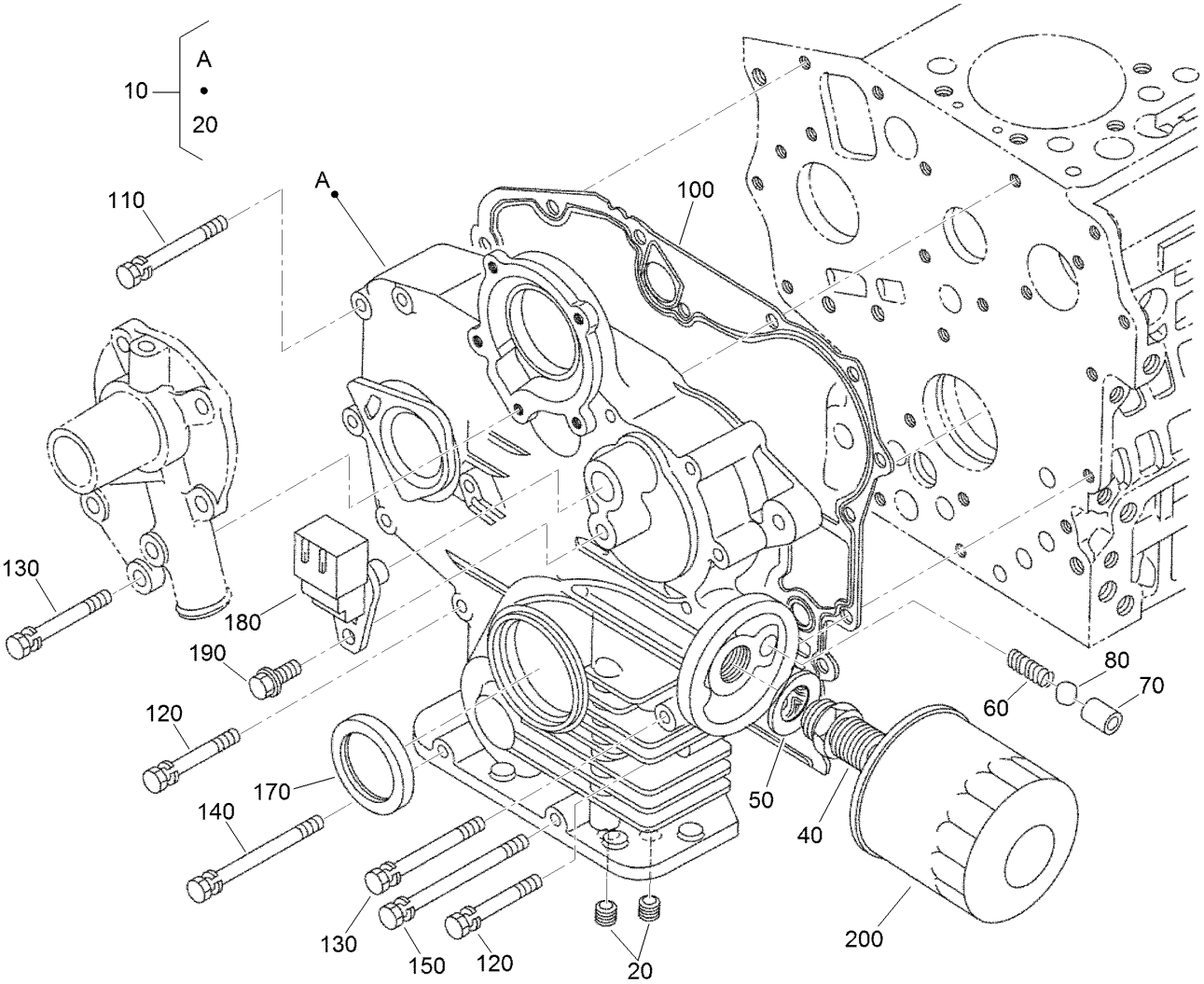


# Gear Case and Oil Filter Cartridge Assembly

| Ref. | Part Number | Qty. | Description |
|---|---|---|---|
| 10 | 125-9151 | 1 | Gear Case ASM |
| 20 | 98-7488 | 2 | Plug |
| 40 | 98-9388 | 1 | Joint-Pipe |
| 50 | 100-1926 | 1 | Washer-Plain |
| 60 | 100-2004 | 1 | Spring |
| 70 | 100-1894 | 1 | Seat-Valve |
| 80 | 100-1792 | 1 | Ball |
| 100 | 117-0327 | 1 | Gasket-Case, Gear |
| 110 | 99-8320 | 1 | Bolt |

| Ref. | Part Number | Qty. | Description |
|---|---|---|---|
| 120 | 98-9356 | 10 | Bolt |
| 130 | 100-1922 | 2 | Bolt |
| 140 | 98-9357 | 1 | Bolt |
| 150 | 110-3710 | 1 | Bolt |
| 170 | 120-7852 | 1 | Seal-Oil |
| 180 | 125-9142 | 1 | Sensor |
| 190 | 99-8363 | 1 | Bolt-Flange |
| 200 | 115-8189 | 1 | Filter-Oil, Engine |

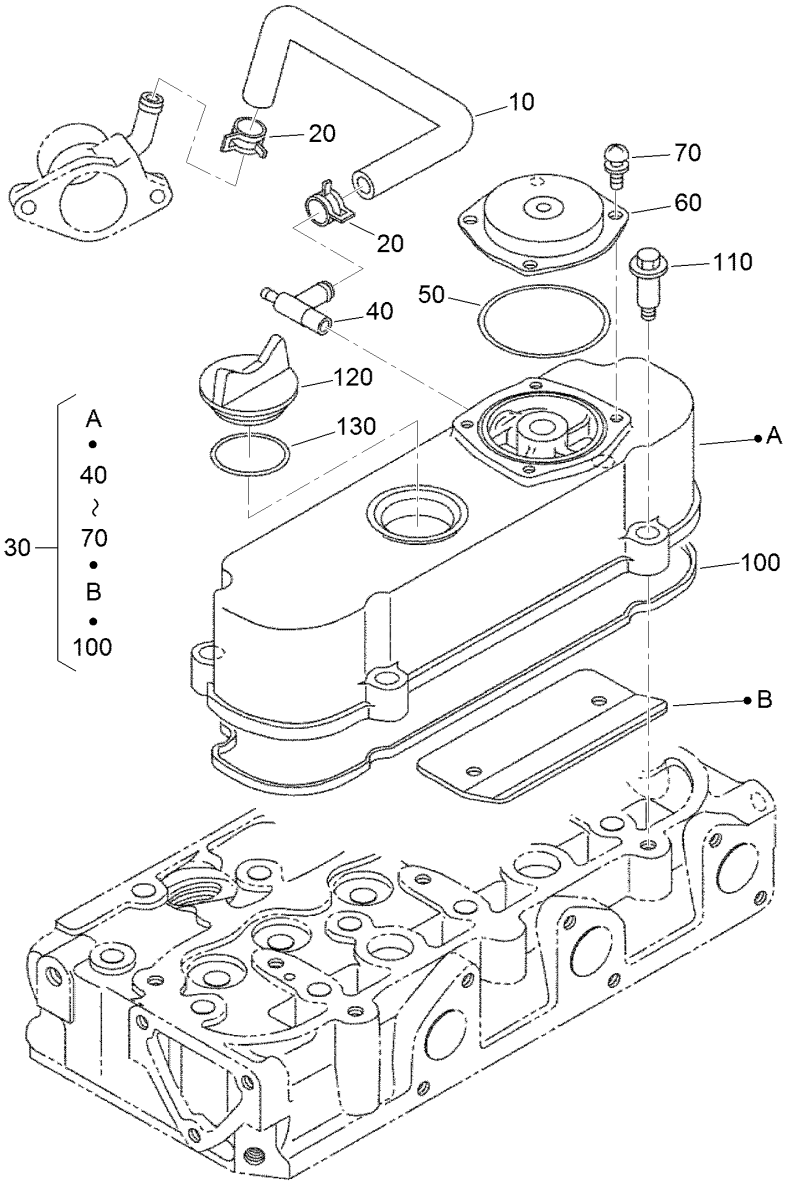


# Cylinder Head Cover Assembly

| Ref. | Part Number | Qty. | Description |
|---|---|---|---|
| 10 | 125-9120 | 1 | Tube-Breather |
| 20 | 98-9579 | 2 | Band-Pipe |
| 30 | 125-9129 | 1 | Cylinder Head Cover ASM |
| 40 | 125-9117 | 1 | Pipe-Breather |
| 50 | 110-3846 | 1 | O Ring-Breather |
| 60 | 108-7060 | 1 | Cover-Breather |
| 70 | 98-9364 | 4 | Screw (With Washer) |
| 100 | 125-9130 | 1 | Gasket-Cover, Head |
| 110 | 108-7063 | 4 | Bolt |
| 120 | 107-9075 | 1 | Plug-Filler, Oil |
| 130 | 99-3446 | 1 | O-Ring |

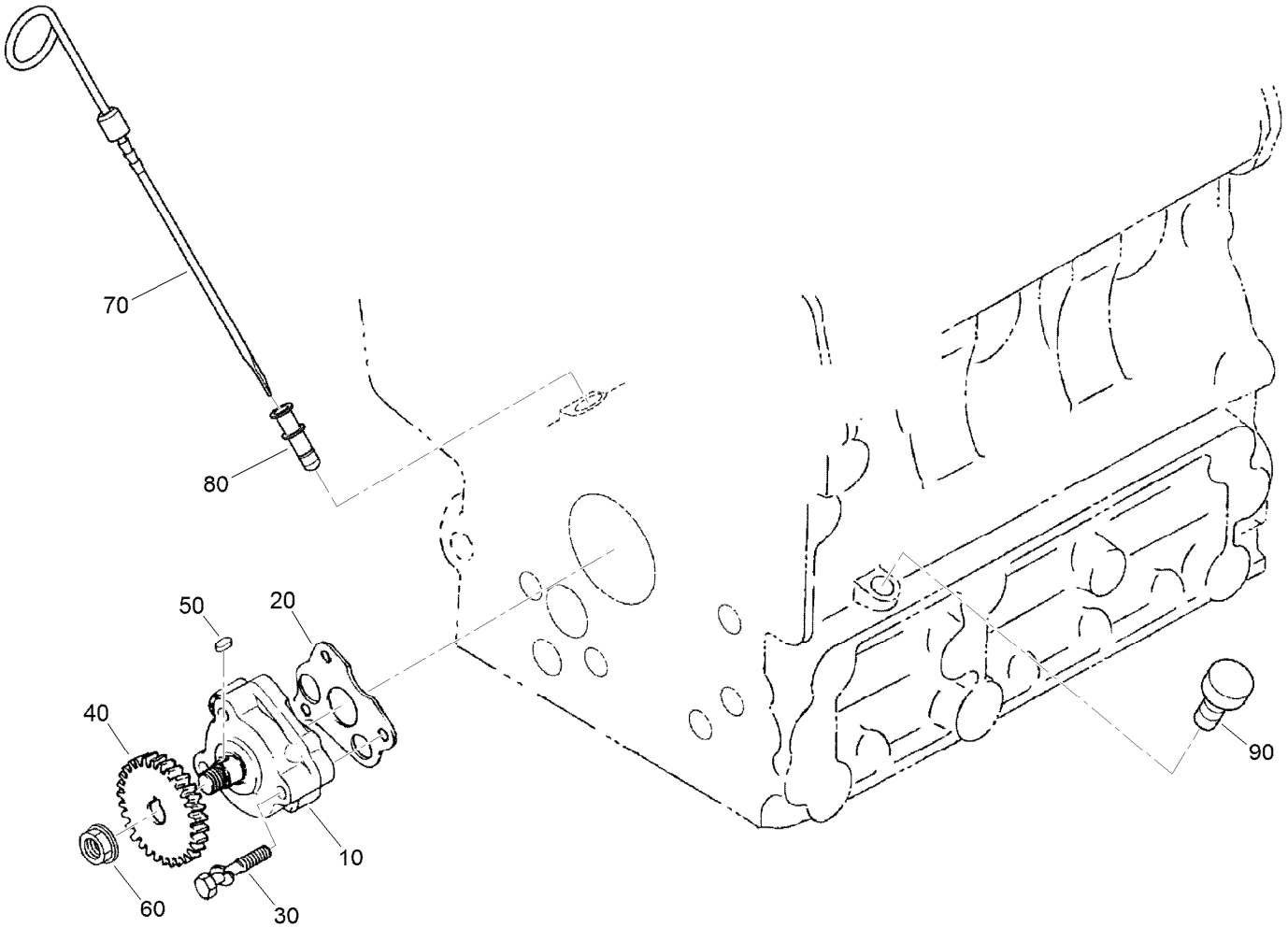


# Dipstick, Guide and Oil Pump Assembly

| *Ref.* | *Part Number* | *Qty.* | *Description* |
|---|---|---|---|
| 10 | 100-2002 | 1 | Oil Pump ASM |
| 20 | 100-2003 | 1 | Gasket-Pump, Oil |
| 30 | 100-1923 | 3 | Bolt |
| 40 | 100-1893 | 1 | Gear-Drive, Oil Pump |
| 50 | 98-7658 | 1 | Key-Feather |
| 60 | 100-1779 | 1 | Nut-Flange |
| 70 | 110-3719 | 1 | Gauge-Oil |
| 80 | 105-4580 | 1 | Guide-Gauge, Oil |
| 90 | 110-3720 | 1 | Plug-Gauge, Oil |

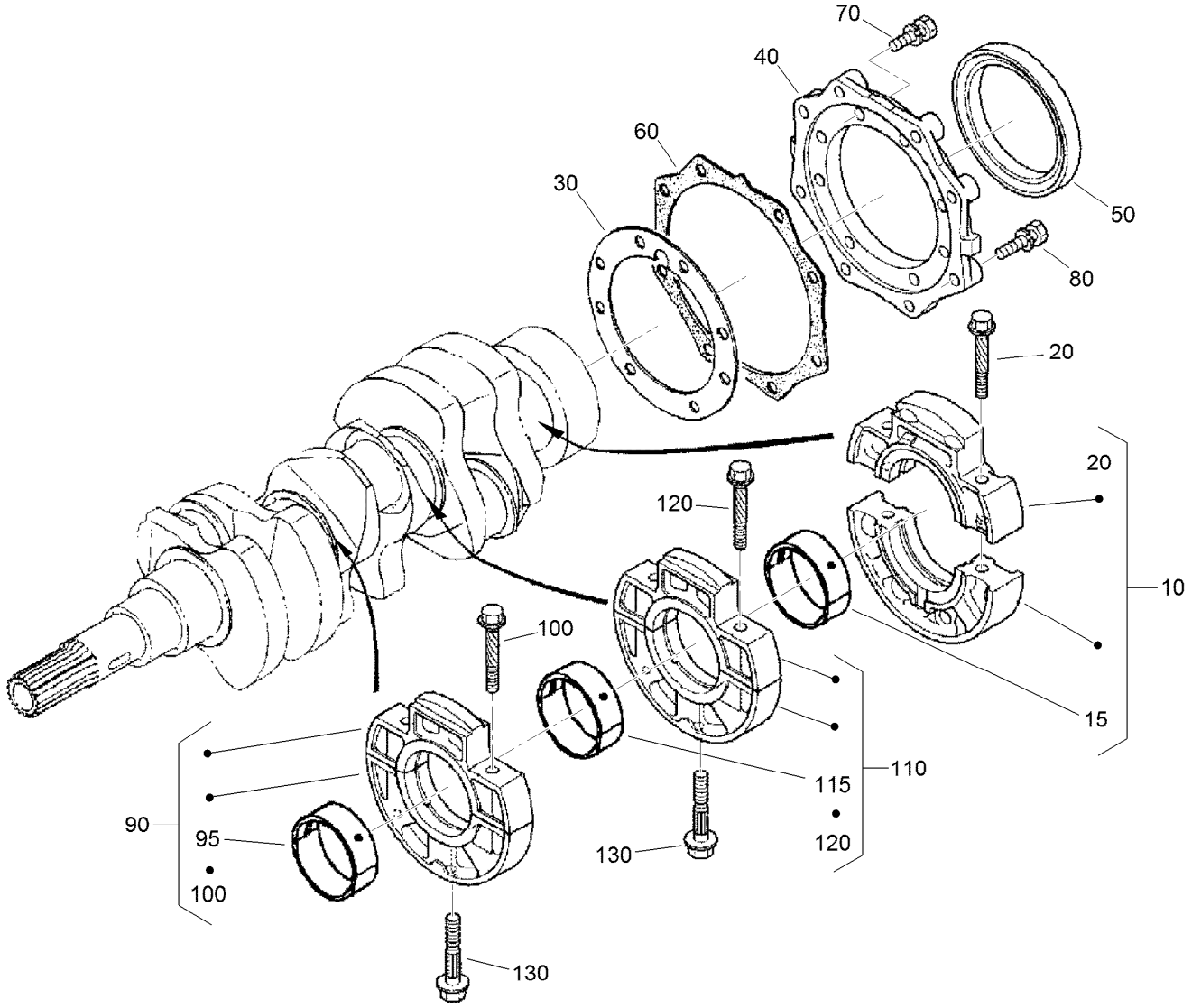


# Main Bearing Case Assembly

| Ref. | Part Number | Qty. | Description |
|---|---|---|---|
| 10 | 121-2426 | 1 | Bearing Case Wheel ASM |
| 15 | 110-3744 | 1 | Crankshaft Metal ASM (STD) |
| 15 | 110-3745 | 1 | Crankshaft Metal ASM (-0.20Mm) |
| 15 | 110-3746 | 1 | Crankshaft Metal ASM (-0.40Mm) |
| 20 | 110-3723 | 2 | Bolt-Case, Bearing |
| 30 | 100-1873 | 1 | Gasket-Case, Bearing |
| 40 | 112-8334 | 1 | Cover-Case, Bearing |
| 50 | 110-3724 | 1 | Seal-Oil |
| 60 | 100-1876 | 1 | Gasket-Cover, Case |
| 70 | 98-7568 | 8 | Bolt |
| 80 | 100-1750 | 8 | Bolt |
| 90 | 110-3725 | 1 | Main Bearing Case ASM |
| 95 | 110-3741 | 1 | Crankshaft Metal ASM (STD) |
| 95 | 110-3742 | 1 | Crankshaft Metal ASM (-0.20Mm) |
| 95 | 110-3743 | 1 | Crankshaft Metal ASM (-0.40Mm) |
| 100 | 110-3723 | 2 | Bolt-Case, Bearing |
| 110 | 110-3725 | 1 | Main Bearing Case ASM |
| 115 | 110-3741 | 1 | Crankshaft Metal ASM (STD) |
| 115 | 110-3742 | 1 | Crankshaft Metal ASM (-0.20Mm) |
| 115 | 110-3743 | 1 | Crankshaft Metal ASM (-0.40Mm) |
| 120 | 110-3723 | 2 | Bolt-Case, Bearing |
| 130 | 100-1874 | 2 | Bolt-Case, Bearing |

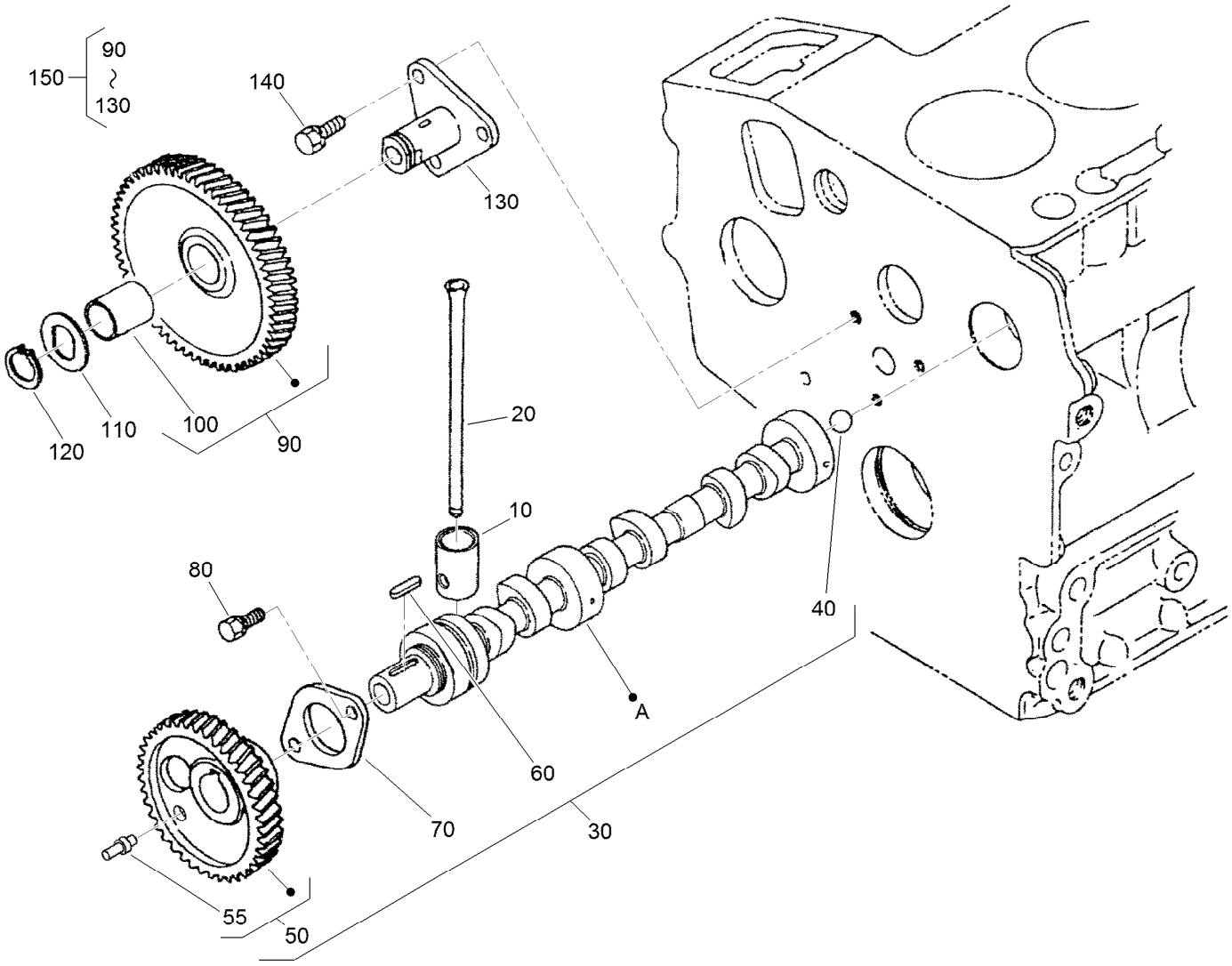


# Cam Shaft and Idle Gear Shaft Assembly

| Ref. | Part Number | Qty. | Description |
|---|---|---|---|
| 10 | 110-3727 | 6 | Tappet |
| 20 | 100-1989 | 6 | Rod-Push |
| 30 | 125-9131 | 1 | Camshaft ASM |
| 40 | 110-3729 | 1 | Ball |
| 50 | 125-9132 | 1 | Cam Gear ASM |
| 55 | 125-9133 | 2 | Pin-Gear, Cam |
| 60 | 98-9378 | 1 | Key-Feather |
| 70 | 100-1887 | 1 | Stopper-Camshaft |

| Ref. | Part Number | Qty. | Description |
|---|---|---|---|
| 80 | 98-9350 | 2 | Bolt |
| 90 | 100-1966 | 1 | Gear-Idle |
| 100 | 100-1968 | 1 | Bushing |
| 110 | 100-1970 | 1 | Collar-Gear, Idle |
| 120 | 100-1969 | 1 | Ring-Snap |
| 130 | 100-1967 | 1 | Shaft-Gear, Idle |
| 140 | 100-1774 | 3 | Bolt-Flange |
| 150 | 100-2240 | 1 | Idle Gear ASM |

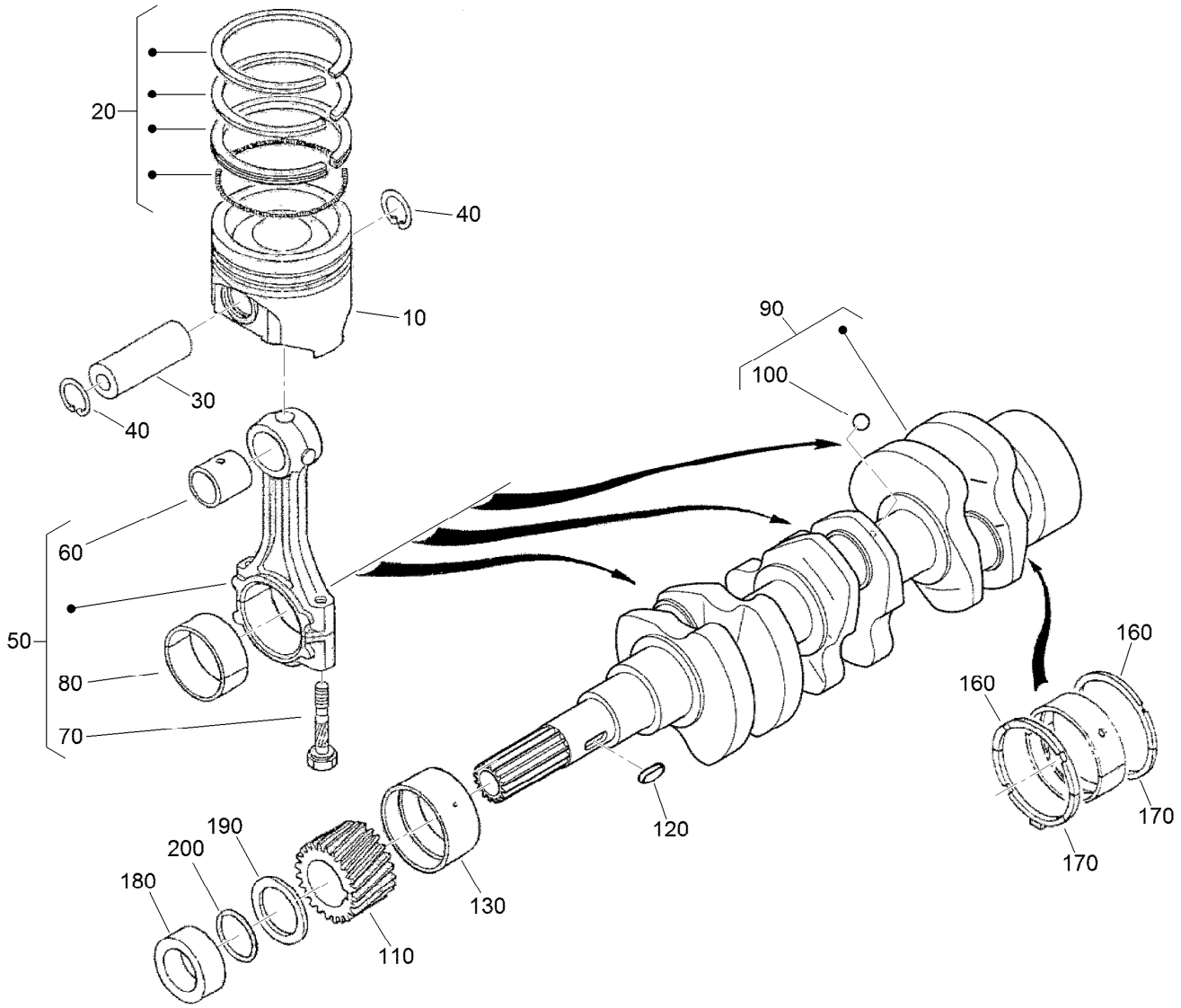


# Piston and Crankshaft Assembly

| Ref. | Part Number | Qty. | Description |
|---|---|---|---|
| 10 | 125-9115 | 3 | Piston (STD) |
| 10 | 125-9116 | 3 | Piston (+0.50Mm) |
| 20 | 125-9134 | 3 | Piston Ring ASM (STD) |
| 20 | 125-9135 | 3 | Piston Ring ASM (+0.50Mm) |
| 30 | 110-3734 | 3 | Pin-Piston |
| 40 | 100-1835 | 6 | Circlip-Internal |
| 50 | 125-9070 | 3 | Connecting Rod ASM |
| 60 | 110-3736 | 3 | Bushing-Pin, Piston |
| 70 | 100-1999 | 6 | Bolt-Rod, Connecting |
| 80 | 100-2000 | 3 | Metal-Crankpin (STD) |
| 80 | 100-1942 | 3 | Metal-Crankpin (-0.20Mm) |
| 80 | 100-1943 | 3 | Metal-Crankpin (-0.40Mm) |
| 90 | 117-0308 | 1 | Crankshaft |
| 100 | 100-1791 | 3 | Ball |
| 110 | 100-1891 | 1 | Gear-Crankshaft |

| Ref. | Part Number | Qty. | Description |
|---|---|---|---|
| 120 | 100-1752 | 1 | Key-Feather |
| 130 | 110-3738 | 1 | Metal-Crankshaft (STD) |
| 130 | 110-3739 | 1 | Metal-Crankshaft (-.0.20Mm) |
| 130 | 110-3740 | 1 | Metal-Crankshaft (-0.40Mm) |
| 160 | 100-1836 | 2 | Metal-Side (STD) |
| 160 | 100-1838 | 2 | Metal-Side (+0.20Mm) |
| 160 | 100-1839 | 2 | Metal-Side (+0.40Mm) |
| 170 | 117-0309 | 2 | Metal-Side (STD) |
| 170 | 100-1840 | 2 | Metal-Side (+0.2Mm) |
| 170 | 100-1841 | 2 | Metal-Side (+0.4Mm) |
| 180 | 100-1890 | 1 | Collar-Crankshaft |
| 190 | 100-1974 | 1 | Slinger-Oil |
| 200 | 100-2209 | 1 | O-Ring |

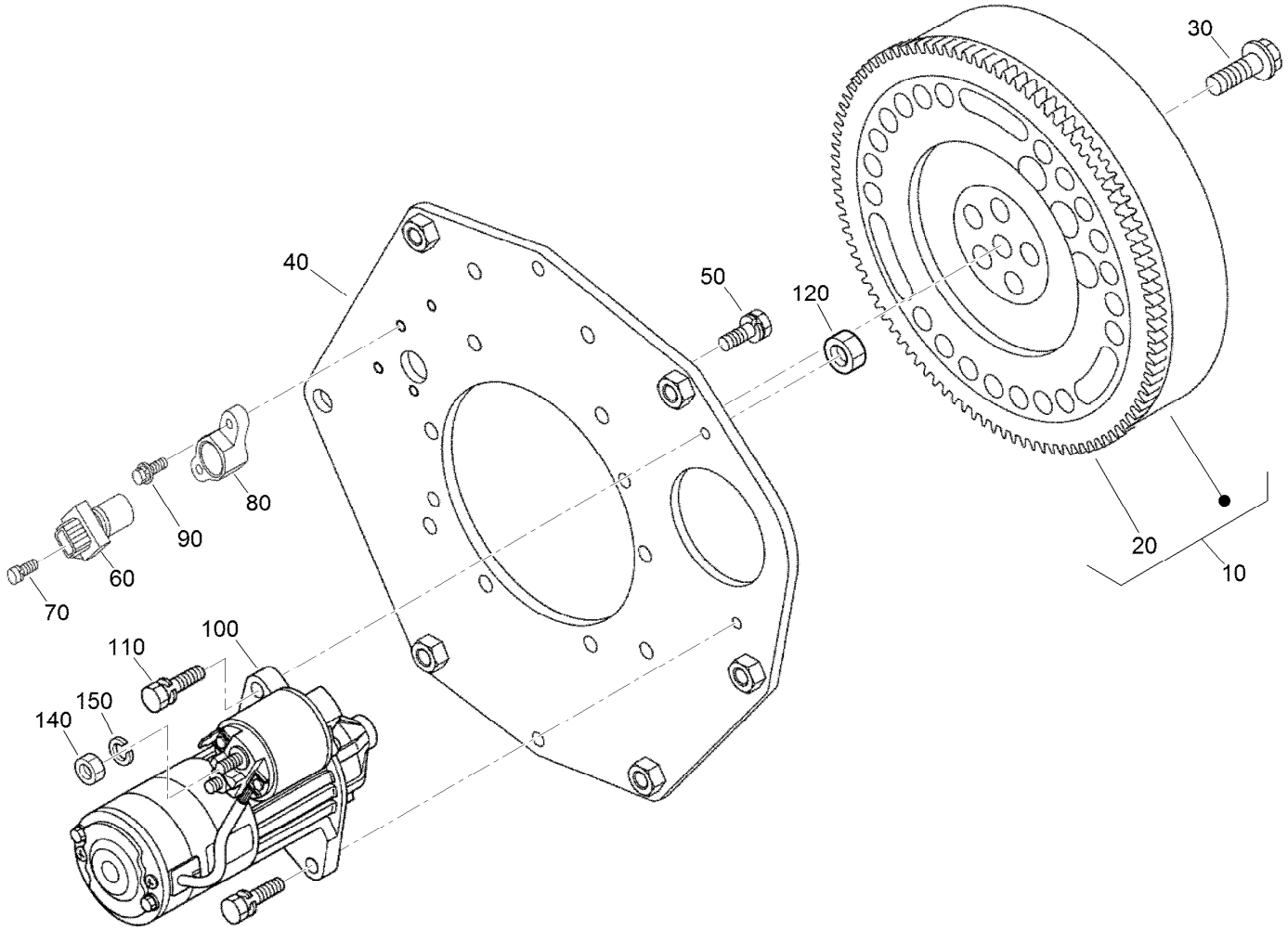


# Flywheel, Starter and Sensor Switch Assembly

| *Ref.* | *Part Number* | *Qty.* | *Description* |
|---|---|---|---|
| 10 | 125-9153 | 1 | Flywheel ASM |
| 20 | 105-3722 | 1 | Gear-Ring |
| 30 | 125-9051 | 5 | Bolt-Flywheel |
| 40 | 125-9152 | 1 | Plate-End, Rear |
| 50 | 110-3754 | 10 | Bolt |
| 60 | 125-9103 | 1 | Sensor Stick ASM |
| 70 | 125-9094 | 1 | Bolt-Flange |
| 80 | 125-9144 | 1 | Holder-Sensor |
| 90 | 108-2873 | 1 | Bolt-Flange |
| 100 | 110-3800 | 1 | Starter ASM |
| 110 | 98-7697 | 2 | Bolt |
| 120 | 98-7534 | 2 | Nut |
| 140 | 98-7534 | 1 | Nut |
| 150 | 105-2893 | 1 | Washer-Spring |

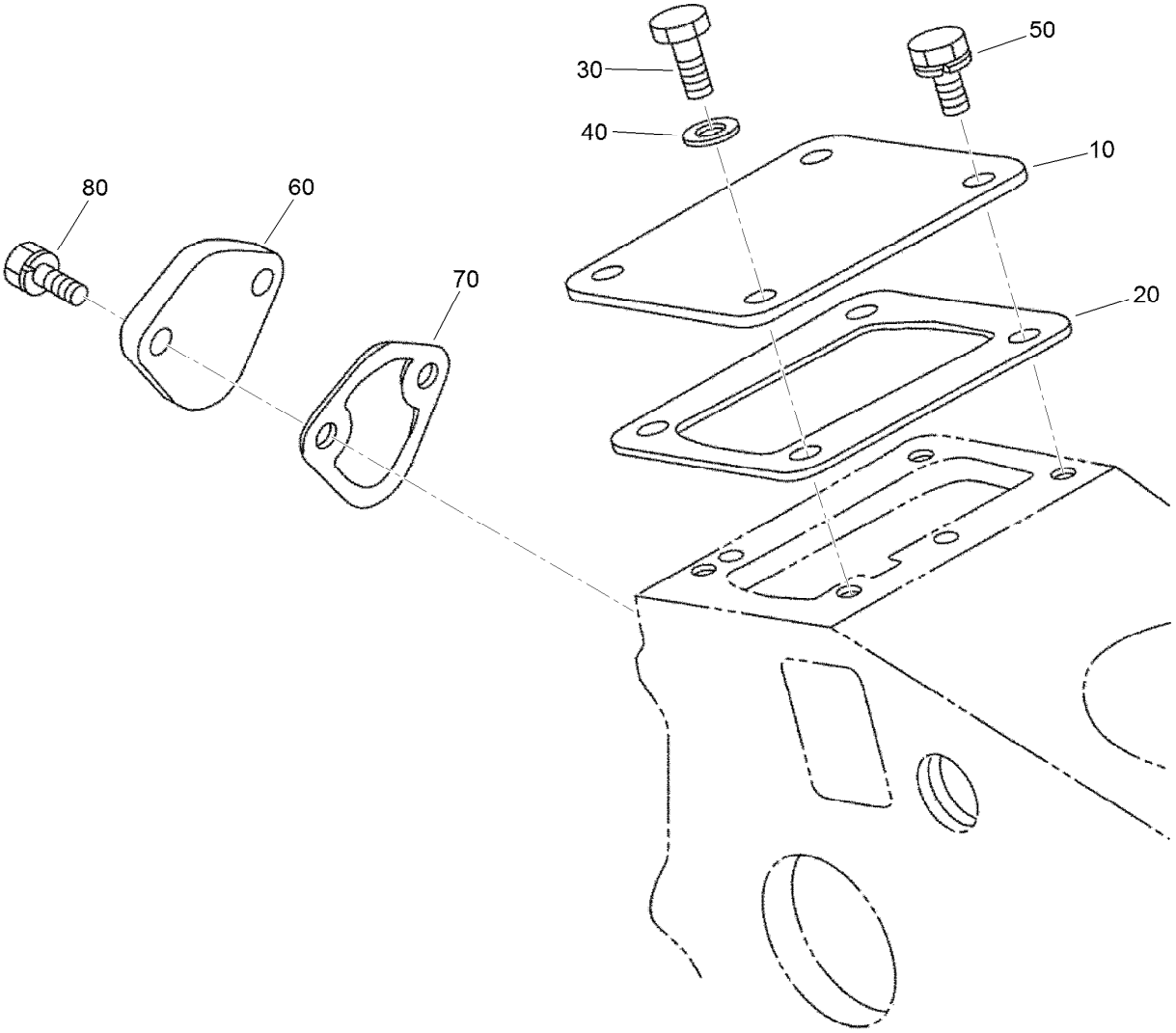


# Injection and Fuel Pump Covers Assembly

| *Ref.* | *Part Number* | *Qty.* | *Description* |
|---|---|---|---|
| 10 | 125-9098 | 1 | Cover |
| 20 | 125-9105 | 1 | Gasket |
| 30 | 99-8348 | 1 | Bolt |
| 40 | 98-7654 | 1 | Gasket |
| 50 | 98-9350 | 3 | Bolt |
| 60 | 99-3514 | 1 | Cover |
| 70 | 98-9636 | 1 | Gasket-Pump, Fuel |
| 80 | 98-7692 | 2 | Bolt |

# Thermostat and Water Pump Assembly

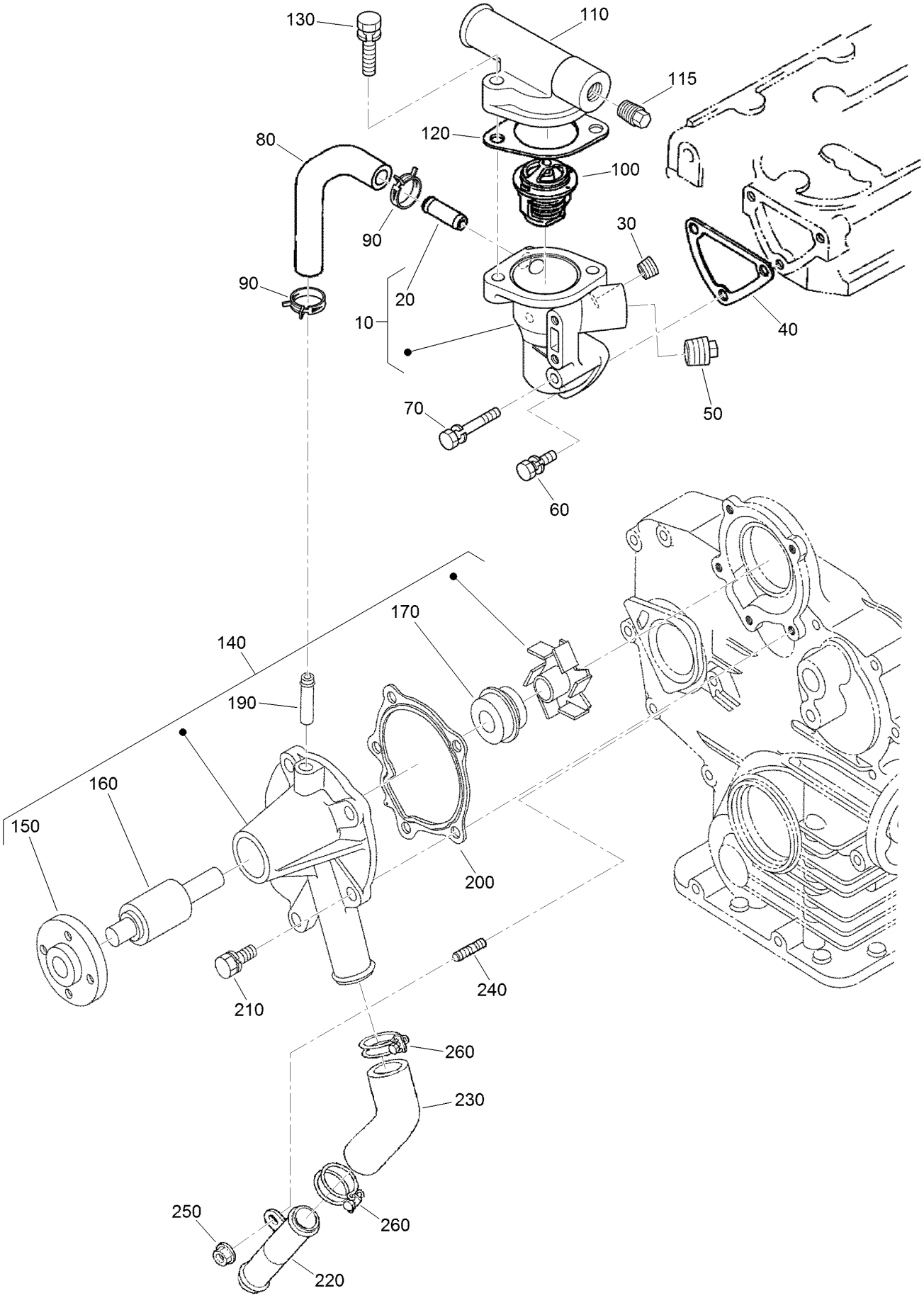

# Thermostat and Water Pump Assembly (continued)

| Ref. | Part Number | Qty. | Description |
|---|---|---|---|
| 10 | 110-3819 | 1 | Water Flange ASM |
| 20 | 98-9580 | 1 | Pipe-Return, Water |
| 30 | 98-9444 | 1 | Plug |
| 40 | 110-3820 | 1 | Gasket-Flange, Water |
| 50 | 110-3821 | 1 | Plug |
| 60 | 98-7692 | 2 | Bolt |
| 70 | 105-3797 | 1 | Bolt |
| 80 | 110-3822 | 1 | Pipe-Return, Water |
| 90 | 121-3835 | 2 | Clamp-Hose |
| 100 | 98-7778 | 1 | Thermostat ASM |
| 110 | 120-7575 | 1 | Cover-Thermostat |
| 115 | 125-9079 | 1 | Plug |
| 120 | 105-3748 | 1 | Gasket-Thermostat |
| 130 | 98-7777 | 2 | Bolt |
| 140 | 110-3824 | 1 | Water Pump ASM |
| 150 | 100-1933 | 1 | Flange-Pump, Water |
| 160 | 100-1934 | 1 | Bearing-Ball |
| 170 | 99-3518 | 1 | Water Pump Seal ASM |
| 190 | 100-1932 | 1 | Pipe-Return, Water |
| 200 | 117-0330 | 1 | Gasket-Pump, Water |
| 210 | 100-1750 | 4 | Bolt |
| 220 | 100-1918 | 1 | Pipe-Water |
| 230 | 110-3827 | 1 | Pipe-Water |
| 240 | 100-1924 | 1 | Stud |
| 250 | 100-2203 | 1 | Nut-Flange |
| 260 | 110-3828 | 2 | Band-Pipe |

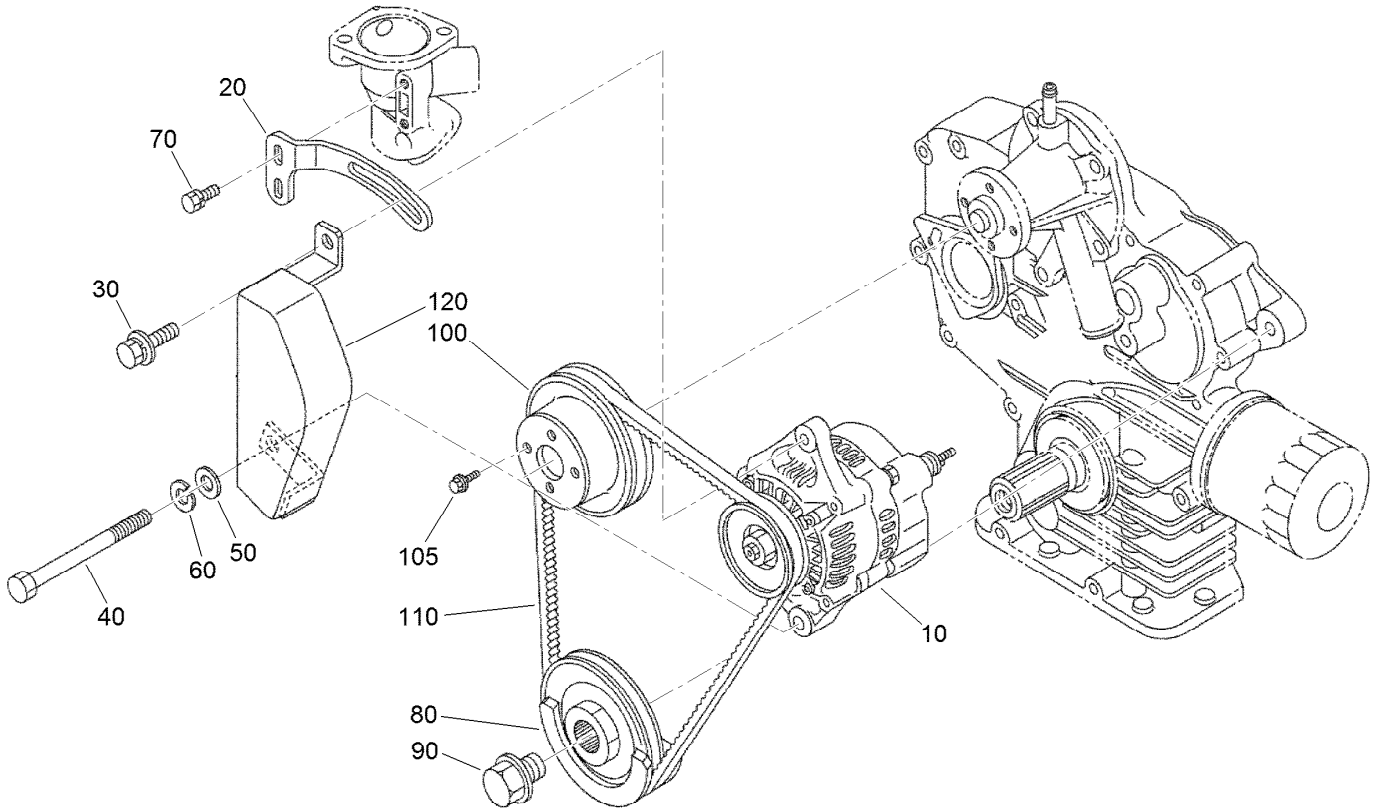


# Alternator and Pulley Assembly

| *Ref.* | *Part Number* | *Qty.* | *Description* |
|---|---|---|---|
| 10 | 117-5541 | 1 | 60 Amp Alternator ASM |
| 20 | 117-0314 | 1 | Stay-Alternator |
| 30 | 121-3800 | 1 | Bolt-Sems |
| 40 | 125-9091 | 1 | Bolt-Hex |
| 50 | 120-5832 | 1 | Washer-Plain |
| 60 | 105-2893 | 1 | Washer-Spring |
| 70 | 98-7692 | 2 | Bolt |
| 80 | 100-1921 | 1 | Pulley-Fan |
| 90 | 100-1978 | 1 | Bolt |
| 100 | 125-9154 | 1 | Pulley-Drive, Fan |
| 105 | 99-8363 | 4 | Bolt-Flange |
| 110 | 110-3796 | 1 | Belt-V |
| 120 | 117-0315 | 1 | Cover-Alternator |

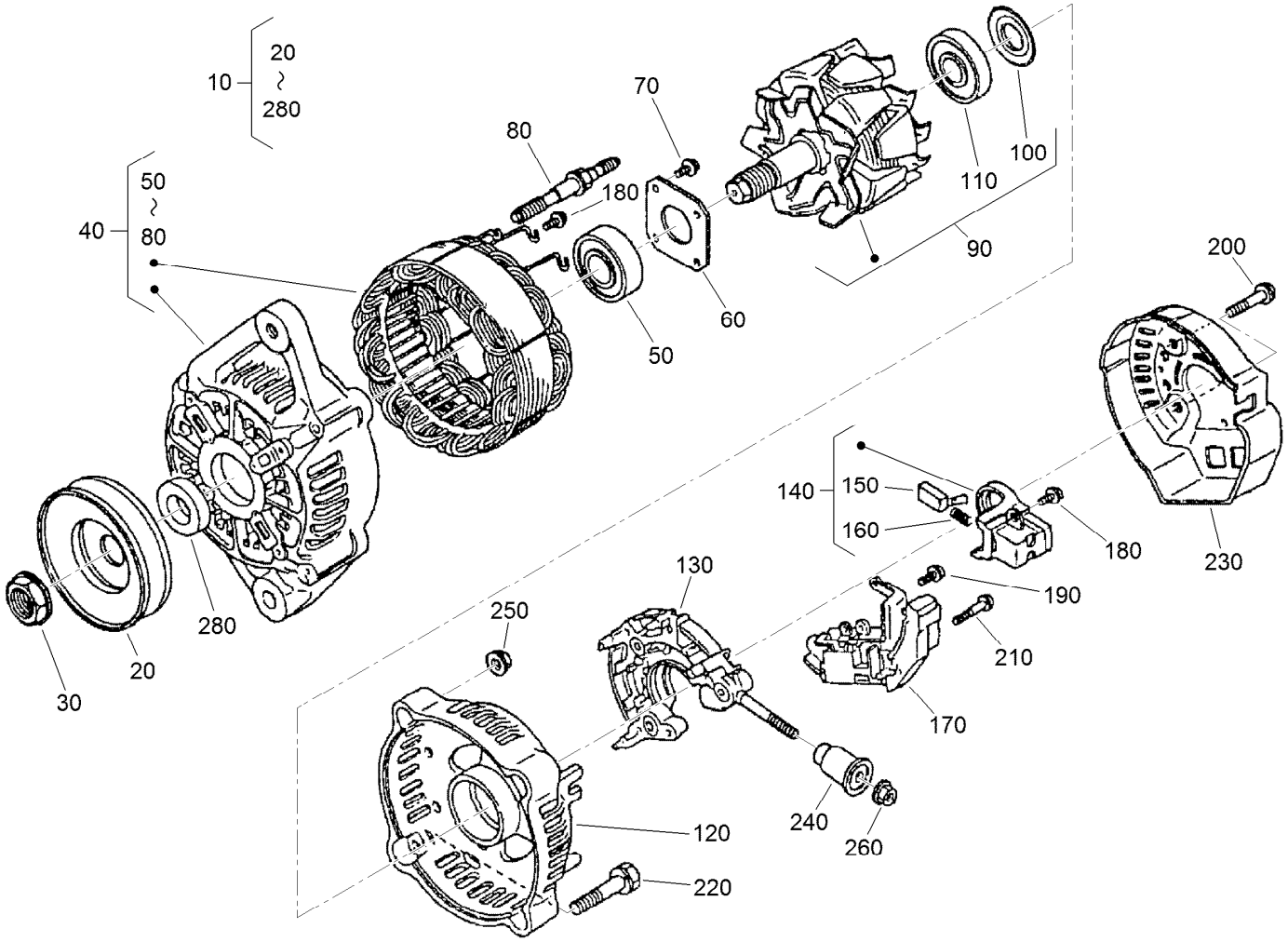


# Alternator Components Assembly

| Ref. | Part Number | Qty. | Description |
|---|---|---|---|
| 10 | 117-5541 | 1 | 60 Amp Alternator ASM |
| 20 | 98-9453 | 1 | Pulley-Dynamo |
| 30 | 98-7708 | 1 | Nut |
| 40 | 117-0316 | 1 | Drive End Frame ASM |
| 50 | 107-0137 | 1 | Bearing-Ball |
| 60 | 98-7715 | 1 | Plate-Retainer |
| 70 | 98-7716 | 4 | Screw-Head, Round |
| 80 | 98-7717 | 2 | Bolt-Through |
| 90 | 117-0317 | 1 | Rotor ASM |
| 100 | 98-7711 | 1 | Cover-Bearing |
| 110 | 107-0138 | 1 | Bearing-Ball |
| 120 | 117-0318 | 1 | *obs* Frame-End |
| 130 | 117-0322 | 1 | Holder |
| 140 | 107-0141 | 1 | Brush Holder ASM |

| Ref. | Part Number | Qty. | Description |
|---|---|---|---|
| 150 | 98-7724 | 2 | Brush |
| 160 | 98-7725 | 2 | Spring-Brush |
| 170 | 117-0319 | 1 | Regulator ASM |
| 180 | 98-7727 | 6 | Screw-Head, Round |
| 190 | 98-7728 | 1 | Screw-Head, Round |
| 200 | 98-7729 | 3 | Bolt |
| 210 | 98-7726 | 2 | Screw-Head, Round |
| 220 | 98-7731 | 2 | Bolt |
| 230 | 117-0320 | 1 | Cover-End |
| 240 | 117-0321 | 1 | Insulation-Brush |
| 250 | 98-7730 | 2 | Nut |
| 260 | 98-7732 | 1 | Nut |
| 280 | 98-7709 | 1 | Collar |

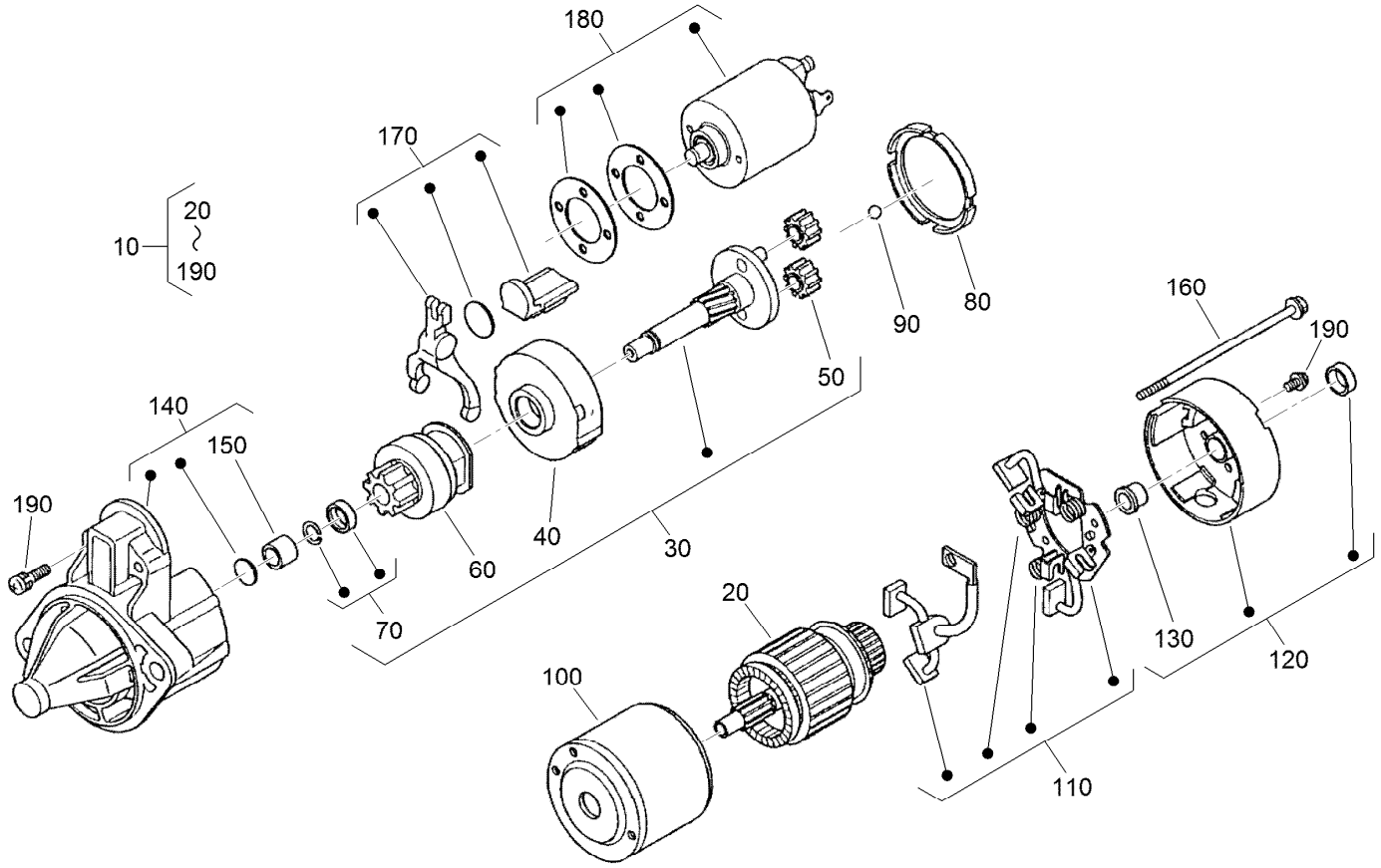


# Starter Components Assembly

| Ref. | Part Number | Qty. | Description |
|---|---|---|---|
| 10 | 110-3800 | 1 | Starter ASM |
| 20 | 110-3801 | 1 | Armature |
| 30 | 110-3802 | 1 | Shaft ASM |
| 40 | 120-3142 | 1 | Gear-Internal |
| 50 | 110-3804 | 3 | Gear-Planetary |
| 60 | 110-3805 | 1 | Clutch-Running, Over |
| 70 | 110-3806 | 1 | Stopper |
| 80 | 120-3143 | 1 | Gasket |
| 90 | 110-3808 | 1 | Ball |
| 100 | 110-3809 | 1 | Yoke |

| Ref. | Part Number | Qty. | Description |
|---|---|---|---|
| 110 | 110-3810 | 1 | Brush Holder ASM |
| 120 | 110-3811 | 1 | Rear Bracket ASM |
| 130 | 110-3812 | 1 | Bushing |
| 140 | 110-3813 | 1 | Front Bracket ASM |
| 150 | 110-3814 | 1 | Bushing |
| 160 | 110-3815 | 2 | Bolt |
| 170 | 110-3816 | 1 | Fork Lever ASM |
| 180 | 125-9099 | 1 | Switch-Magnetic |
| 190 | 110-3818 | 1 | Screws (Set Of 4) |

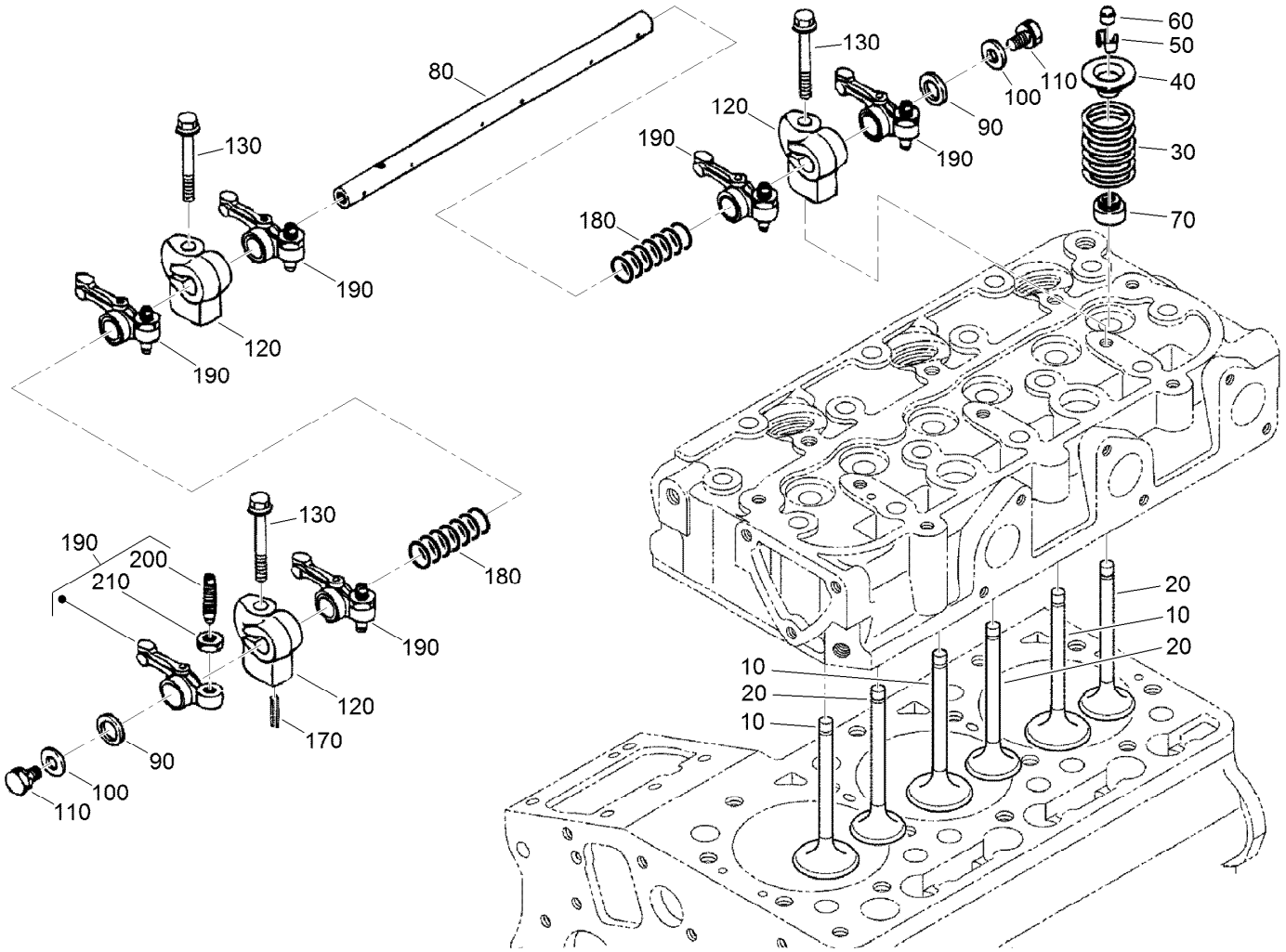


# Valve and Rocker Arm Assembly

| Ref. | Part Number | Qty. | Description |
|---|---|---|---|
| 10 | 125-9106 | 3 | Valve-Inlet |
| 20 | 125-9114 | 3 | Valve-Exhaust |
| 30 | 100-1823 | 6 | Spring-Valve |
| 40 | 100-1825 | 6 | Retainer-Spring, Valve |
| 50 | 120-3136 | 6 | Collet-Spring, Valve |
| 60 | 100-2155 | 6 | Cap-Valve |
| 70 | 125-9128 | 6 | Seal-Stem, Valve |
| 80 | 110-3831 | 1 | Shaft-Arm, Rocker |
| 90 | 100-2044 | 2 | Washer |

| Ref. | Part Number | Qty. | Description |
|---|---|---|---|
| 100 | 100-1927 | 2 | Washer-Plain |
| 110 | 100-9265 | 2 | Bolt |
| 120 | 110-3833 | 3 | Bracket-Arm, Rocker |
| 130 | 110-3834 | 3 | Bolt-Flange |
| 170 | 98-7602 | 1 | Pin-Spring |
| 180 | 110-3835 | 2 | Spring |
| 190 | 100-1884 | 6 | Rocker Arm ASM |
| 200 | 100-1885 | 6 | Screw-Adjusting |
| 210 | 100-1827 | 6 | Nut |

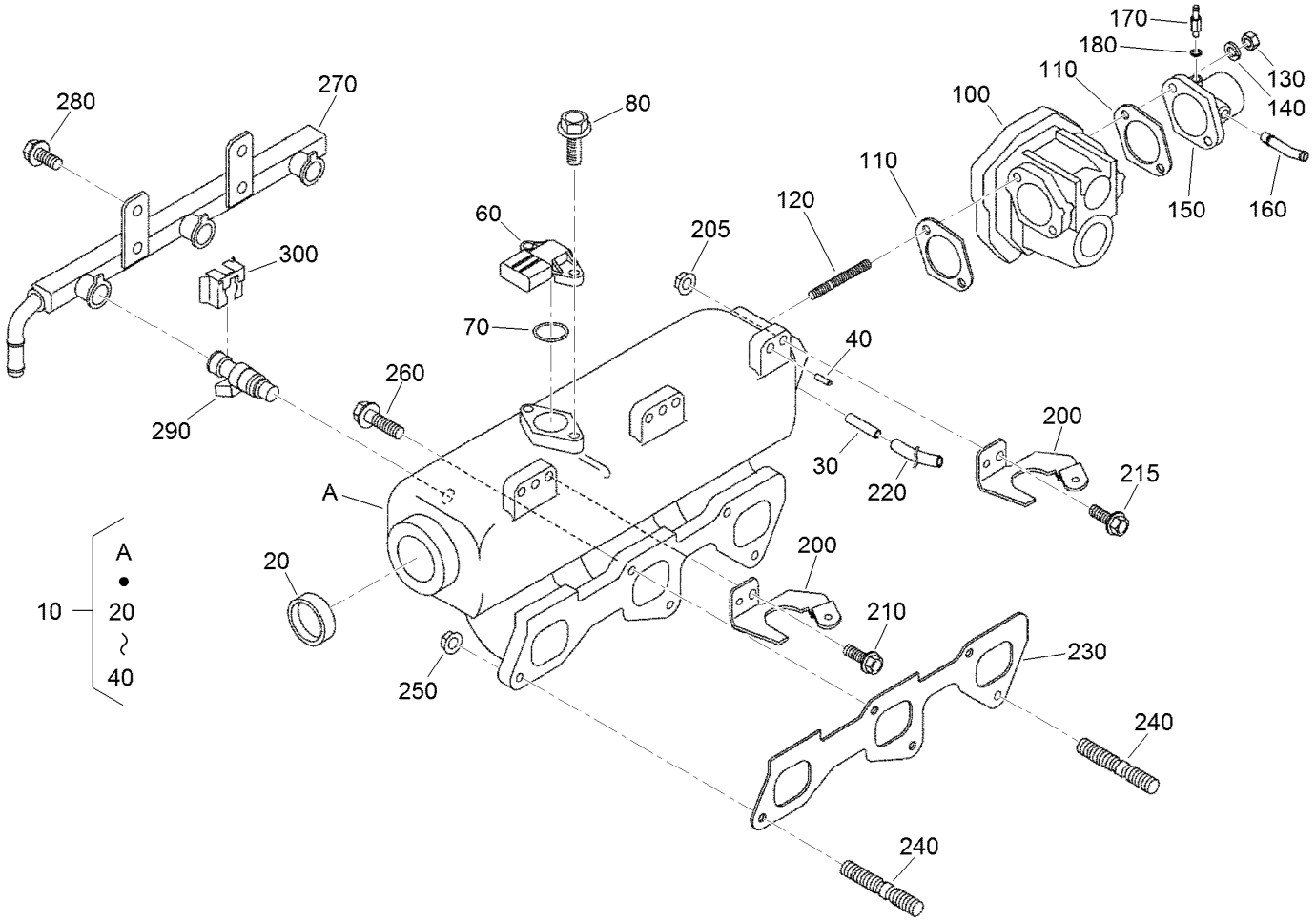


# Inlet Manifold Assembly

| Ref. | Part Number | Qty. | Description |
|---|---|---|---|
| 10 | 125-9122 | 1 | Intake Manifold ASM |
| 20 | 98-7539 | 1 | Cap-Sealing |
| 30 | 125-9158 | 1 | Pin-Pipe |
| 40 | 98-9375 | 3 | Pin-Straight |
| 60 | 125-9110 | 1 | Sensor (Tmap) |
| 70 | 125-9112 | 1 | O Ring |
| 80 | 125-9111 | 2 | Bolt-Flange |
| 100 | 125-9136 | 1 | Throttle Body ASM |
| 110 | 125-9104 | 2 | Gasket-Cleaner, Air |
| 120 | 125-9093 | 2 | Stud |
| 130 | 98-7534 | 2 | Nut |
| 140 | 105-2893 | 2 | Washer-Spring |
| 150 | 125-9121 | 1 | Flange-Cleaner, Air |
| 160 | 110-3837 | 1 | Pipe-Breather |
| 170 | 98-9431 | 1 | Screw-Bleeder, Air |

| Ref. | Part Number | Qty. | Description |
|---|---|---|---|
| 180 | 98-7654 | 1 | Gasket |
| 200 | 125-9146 | 3 | Stay-Coil, Ignition |
| 205 | 100-2203 | 1 | Nut-Flange |
| 210 | 99-8363 | 2 | Bolt-Flange |
| 215 | 105-3789 | 1 | Bolt |
| 220 | 125-9097 | 1 | Tube-Fuel |
| 230 | 125-9123 | 1 | Gasket-Manifold, Intake |
| 240 | 125-9092 | 2 | Stud |
| 250 | 100-2203 | 2 | Nut-Flange |
| 260 | 98-9352 | 3 | Bolt |
| 270 | 125-9137 | 1 | Rail-Ignition, Fuel |
| 280 | 98-7692 | 2 | Bolt |
| 290 | 125-9107 | 3 | Injector |
| 300 | 125-9138 | 3 | Stopper-Injector |

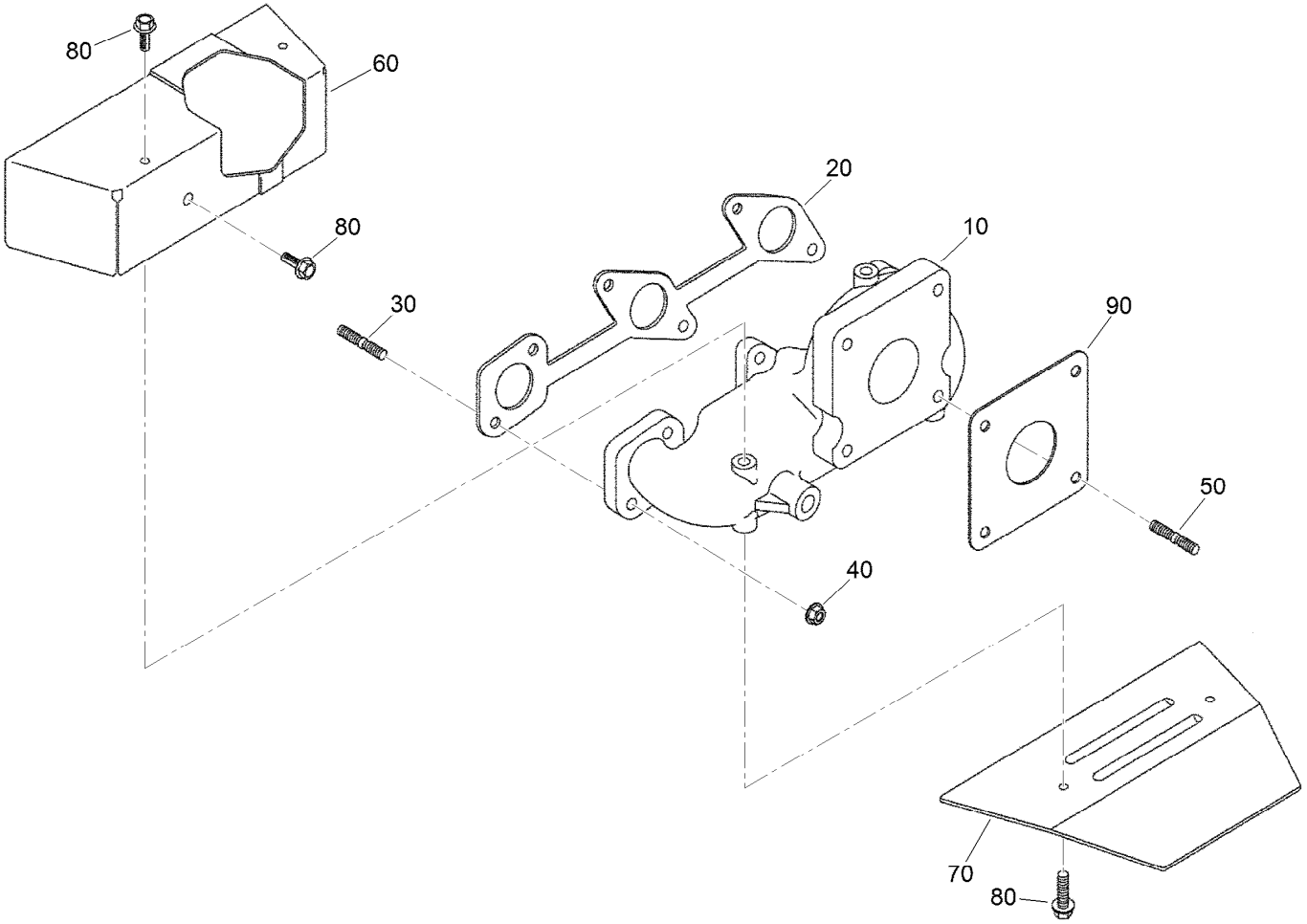


# Exhaust Manifold Assembly

| *Ref.* | *Part Number* | *Qty.* | *Description* |
|---|---|---|---|
| 10 | 125-9125 | 1 | Manifold-Exhaust |
| 20 | 110-3840 | 1 | Gasket-Manifold, Exhaust |
| 30 | 125-9149 | 6 | Bolt-Stud |
| 40 | 100-1778 | 6 | Nut |
| 50 | 125-9100 | 4 | Stud |
| 60 | 125-9126 | 1 | Cover-Upper |
| 70 | 125-9127 | 1 | Cover-Lower |
| 80 | 125-9090 | 5 | Bolt |
| 90 | 125-9108 | 1 | Gasket-Muffler |

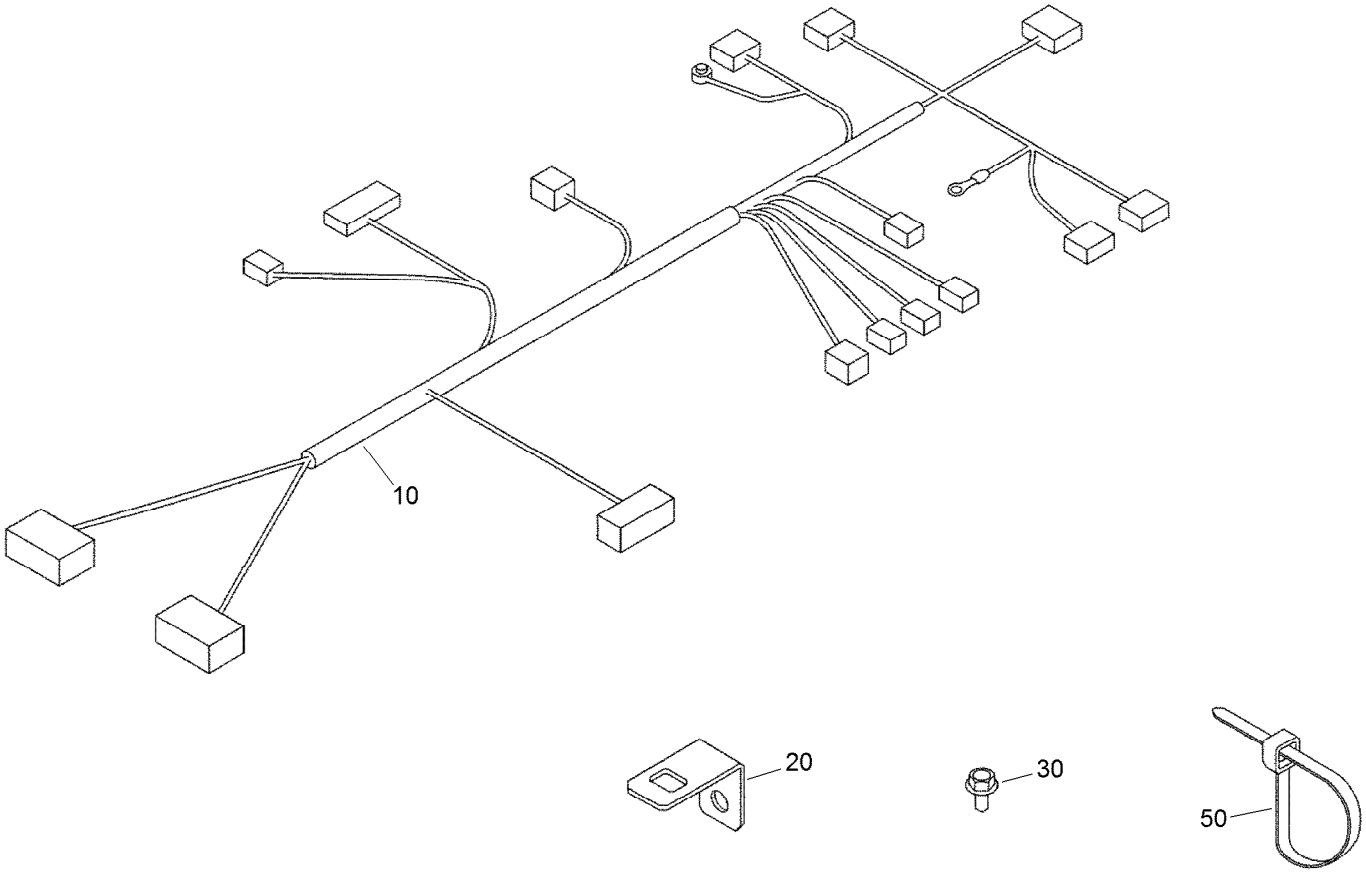


# Wire Harness Assembly

| *Ref.* | *Part Number* | *Qty.* | *Description* |
|---|---|---|---|
| 10 | 125-9143 | 1 | Harness-Wire, E C U |
| 20 | 125-9157 | 1 | Stay-Boom, Harness |
| 30 | 115-8504 | 1 | Bolt-Flange |
| 50 | 125-9101 | 2 | Band-Cord |

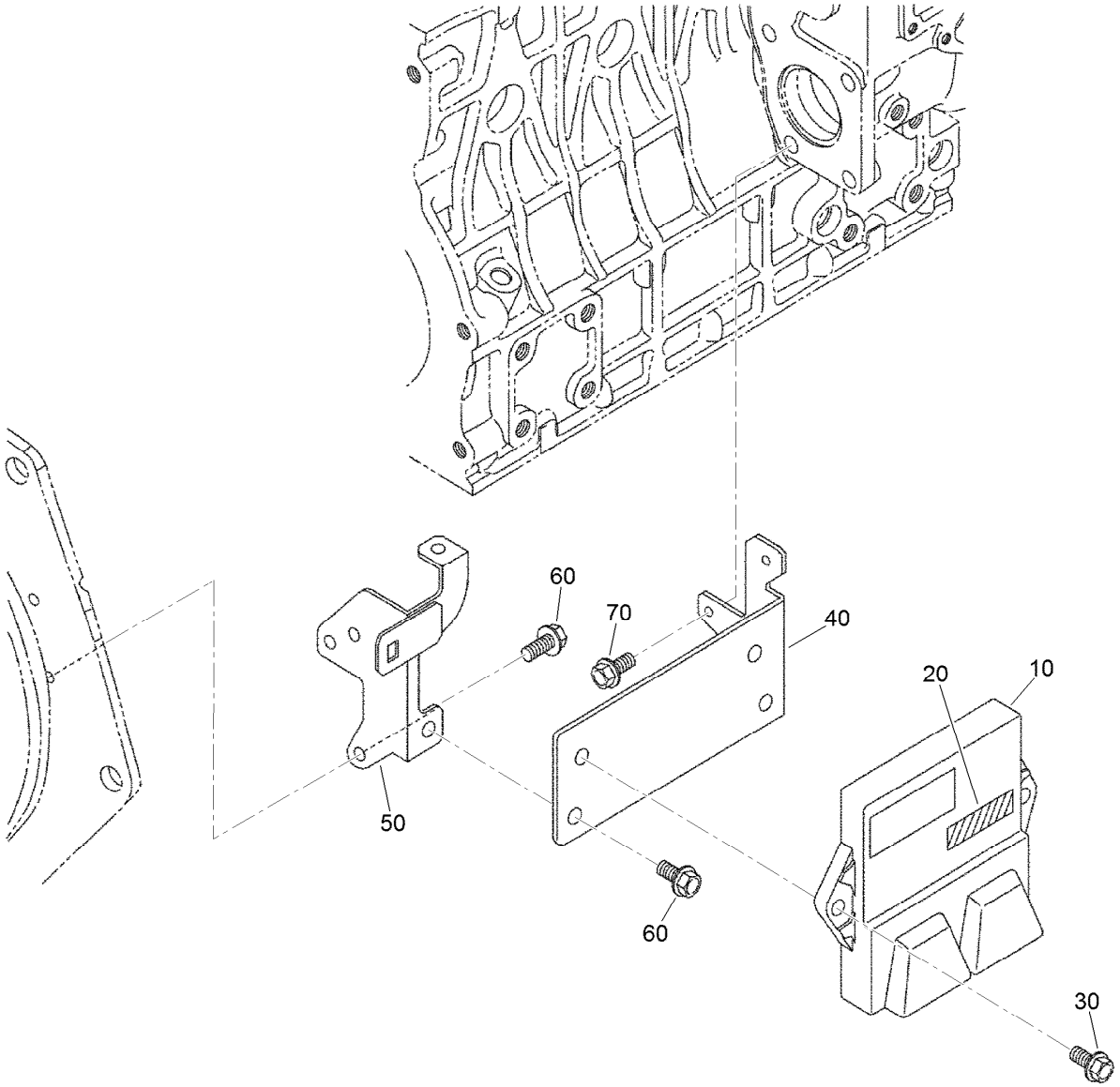


# Electronic Control Unit Assembly

| *Ref.* | *Part Number* | *Qty.* | *Description* |
|---|---|---|---|
| 10 | 125-9156 | 1 | E C U ASM |
| 20 | 125-9147 | 1 | Label |
| 30 | 108-2873 | 2 | Bolt-Flange |
| 40 | 125-9140 | 1 | Stay-E C U |
| 50 | 125-9141 | 1 | Stay-E C U |
| 60 | 100-1774 | 3 | Bolt-Flange |
| 70 | 115-8504 | 2 | Bolt-Flange |

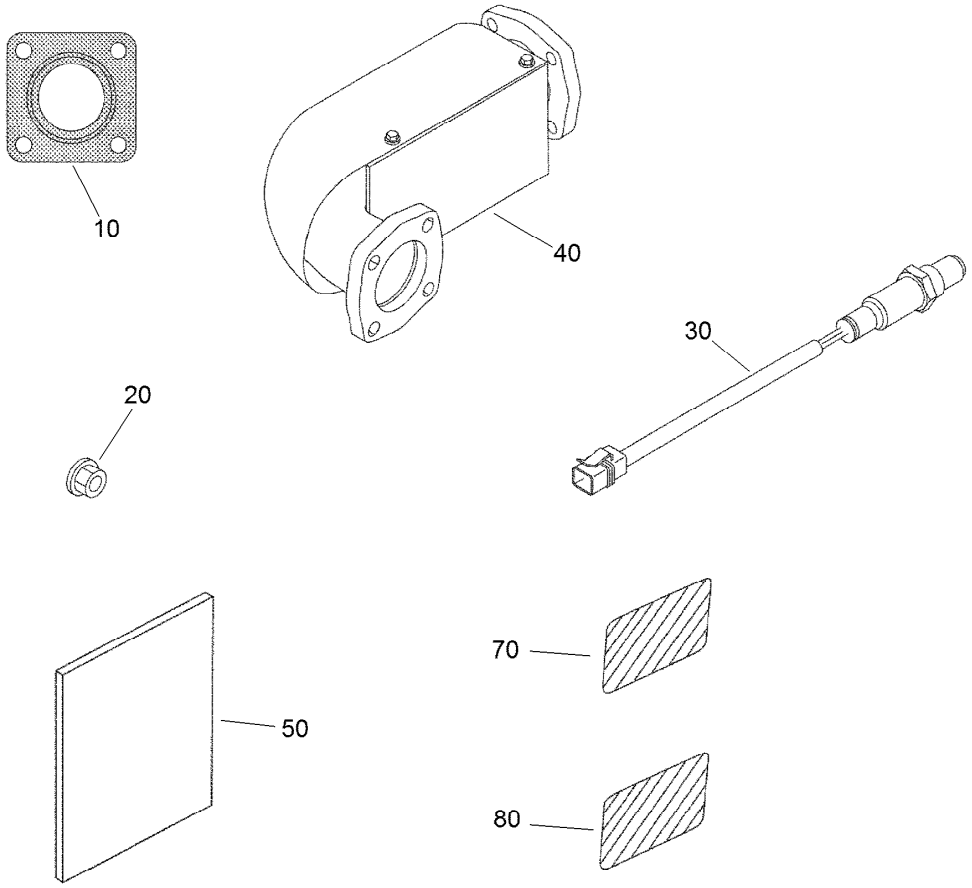


# Operator Manual and Miscellaneous Engine Parts

| *Ref.* | *Part Number* | *Qty.* | *Description* |
|---|---|---|---|
| 10 | 125-9108 | 1 | Gasket-Muffler |
| 20 | 125-9095 | 4 | Nut |
| 30 | 125-9124 | 1 | *obs* Sensor (O2) |
| 40 | 125-9118 | 1 | Converter-Catalytic (F/W Engine) |
| 50 | 125-9148 | 1 | Operator Manual |
| 70 | 110-0806 | 1 | Decal-Caution |
| 80 | 110-3843 | 1 | Label-Instruction |

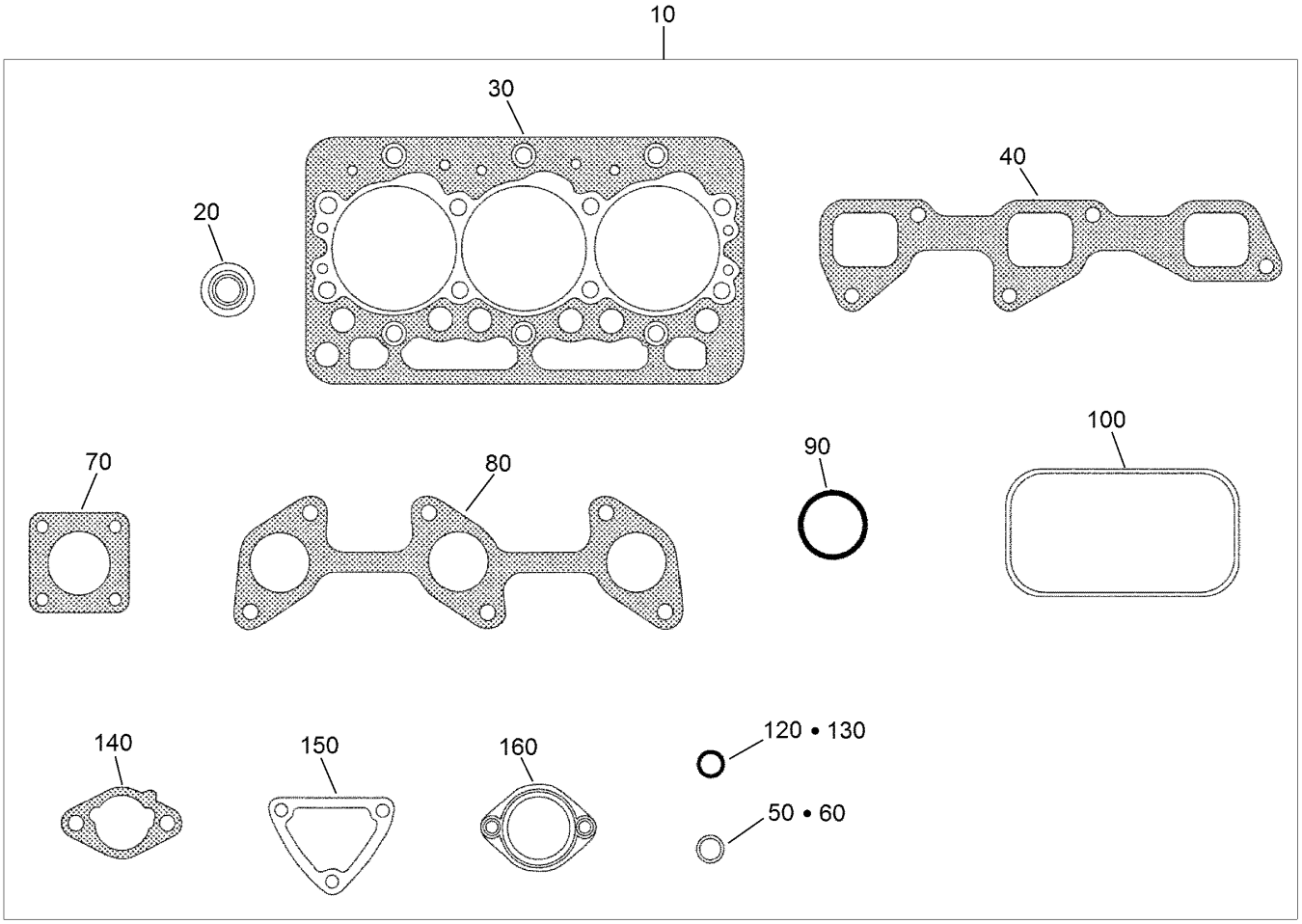


# Upper Engine Gasket Kit

| *Ref.* | *Part Number* | *Qty.* | *Description* |
|---|---|---|---|
| 10 | 125-9150 | 1 | Upper Gasket Kit |
| 20 | 125-9128 | 6 | Seal-Stem, Valve |
| 30 | 125-9113 | 1 | Gasket-Head |
| 40 | 125-9123 | 1 | Gasket-Manifold, Intake |
| 50 | 125-9112 | 1 | O Ring |
| 60 | 99-3446 | 1 | O-Ring |
| 70 | 125-9108 | 1 | Gasket-Muffler |
| 80 | 110-3840 | 1 | Gasket-Manifold, Exhaust |
| 90 | 110-3846 | 1 | O Ring-Breather |
| 100 | 125-9130 | 1 | Gasket-Cover, Head |
| 120 | 125-9096 | 1 | Gasket |
| 130 | 98-7654 | 1 | Gasket |
| 140 | 125-9104 | 2 | Gasket-Cleaner, Air |
| 150 | 110-3820 | 1 | Gasket-Flange, Water |
| 160 | 105-3748 | 1 | Gasket-Thermostat |

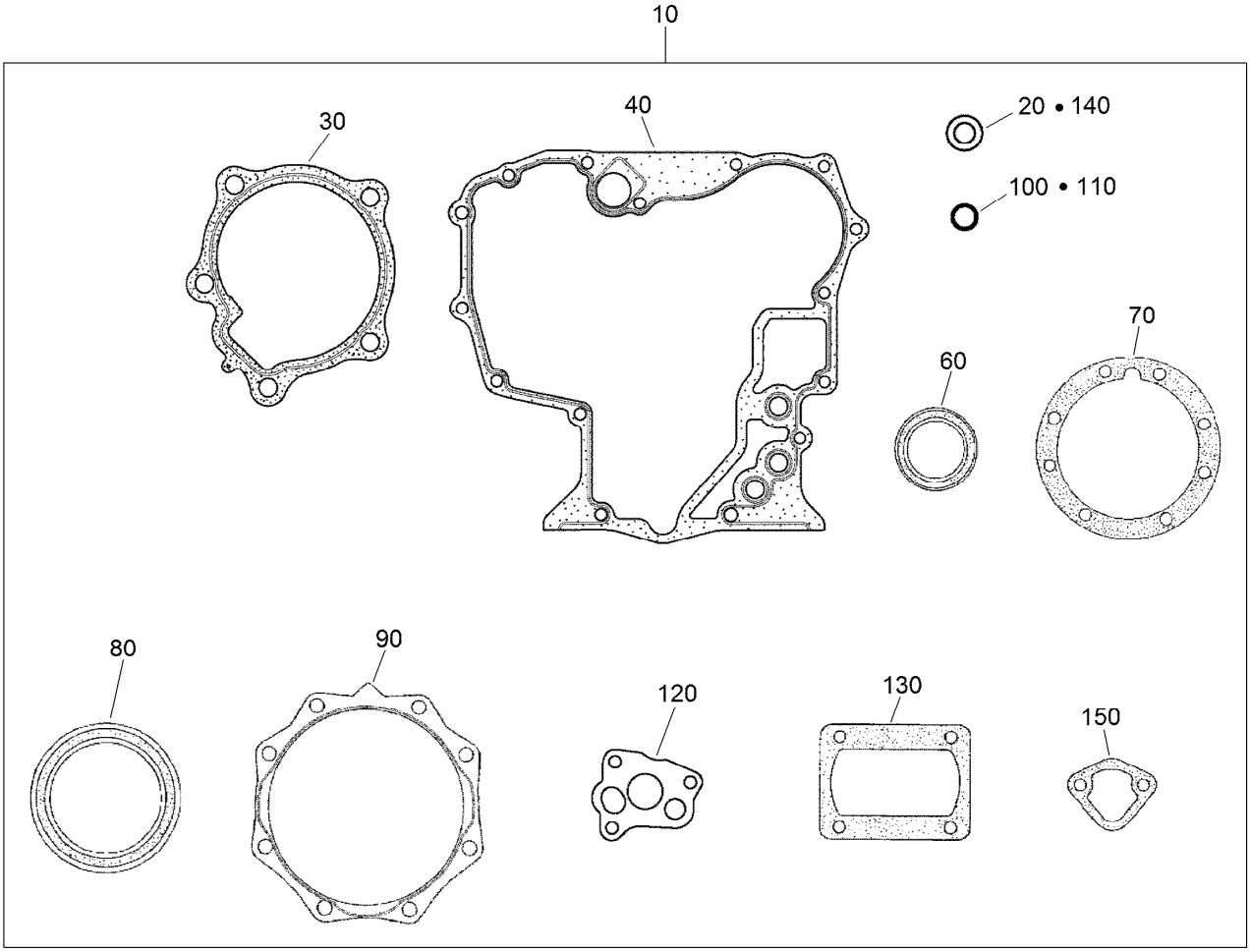


# Lower Engine Gasket Kit

| *Ref.* | *Part Number* | *Qty.* | *Description* |
|---|---|---|---|
| 10 | 125-9155 | 1 | Lower Gasket Kit |
| 20 | 98-7524 | 1 | Gasket |
| 30 | 117-0330 | 1 | Gasket-Pump, Water |
| 40 | 117-0327 | 1 | Gasket-Case, Gear |
| 60 | 120-7852 | 1 | Seal-Oil |
| 70 | 100-1873 | 1 | Gasket-Case, Bearing |
| 80 | 110-3724 | 1 | Seal-Oil |
| 90 | 100-1876 | 1 | Gasket-Cover, Case |
| 100 | 100-2209 | 1 | O-Ring |
| 110 | 105-3776 | 1 | O-Ring |
| 120 | 100-2003 | 1 | Gasket-Pump, Oil |
| 130 | 125-9105 | 1 | Gasket |
| 140 | 98-7654 | 1 | Gasket |
| 150 | 98-9636 | 1 | Gasket-Pump, Fuel |

# Attachments and Accessories

## For 07384 Workman HDX Utility Vehicle with Bed

| Product Name | Model/Part |
|---|---|
| Pro Sweep 5200 Turf Sweeper | 07066 |
| Full Area Flatbed | 07301 |
| Full Area Flatbed Side Kit | 07302 |
| Fold Down Side Kit | 07303 |
| High-Flow Hydraulic Kit | 07316 |
| 2/3 Area Flatbed | 07321 |
| 2/3 Area Flatbed Side Kit | 07322 |
| Bed Liner | 07331 |
| Cab | 07339 |
| 1/3 Area Flatbed | 07341 |
| 1/3 Area Platform Lift | 07347 |
| Heater Kit | 07349 |
| Canopy | 07372 |
| Windshield | 07373 |
| Cab Door Kit | 07375 |
| Solid Window Cab Door Kit | 07376 |
| Hitch Frame Kit | 07377 |
| 4 Post Roll-Over Protection System | 07378 |
| Hand Throttle Kit | 07388 |
| Rear PTO Kit | 07419 |
| Synthetic Turf Conditioner, Tow-Behind Accessory | 08791 |
| ProCore Processor | 09749 |
| Backup Alarm Kit | 107-8037 |
| Premium ATF (Drum) | 108-1185 |
| Premium ATF (Pail) | 108-1186 |
| Premium All Purpose Grease (Tube) | 108-1190 |
| Remote Hydraulics Manifold Kit | 110-2626 |
| Tire-Rear, 24x13-12 | 110-5132 |
| Spark Arrestor Kit | 112-1688 |
| Wheel-12in x 8.0in | 114-8260 |
| Horn Kit | 115-7825 |
| Side Mirror Kit | 115-7849 |
| Roll-Over Protection System Signal Kit | 117-4825 |
| Worklight Kit | 117-4827 |
| Remote Hydraulic Float Kit | 117-4828 |
| Cab Mirror Kit | 117-4830 |
| Receiver Hitch Kit | 117-4831 |
| Trailer Signal Kit | 117-4836 |
| 24x13-12 Tire and Wheel ASM | 117-4838 |
| Canopy for Four-Post Roll-Over Protection System Kit | 119-9457 |
| Road Light and Homologation Kit | 120-5030 |
| Brake and Signal Light Kit | 120-5045 |
| High Air Intake Kit | 121-6285 |
| Trailer Brake Kit | 125-0123 |
| 1/3 Area Cover Kit | 127-8739 |
| Spreader Base Unit | 41253 |

# Attachments and Accessories (continued)


Vicon Spreader ..... 41256
Topdresser 1800 ..... 44225
Core Harvester Adapter Kit ..... 44242
Topdresser 2500 ..... 44507
Pro Force Debris Blower ..... 44538
Road-Ready Pro Force Debris Blower ..... 44539
ProPass 200 Top Dresser with Twin Spinner and Wireless Control ..... 44700
ProPass 200 Top Dresser with Twin Spinner ..... 44701
Automatic Tailgate Release Kit ..... 92-1220
Fuse Block ..... 92-2641
PTO Over Running Clutch Kit ..... 92-2655
Topdresser 1800 Lift Kit ..... 92-4452
Mid-Mount Kit for Platform Lift ..... 93-3741
Rear 1/3 Area Mounting Kit ..... 93-9249
Tire-Rear, 23x8.50-12 ..... 98-2993
Tire-Rear, Industrial ..... 99-1091

**Notes:**

**Notes:**

**Notes:**

TORO®

Count on it.