Form No. 3426-701 Rev A

TORO®

Count on it.

Operator's Manual

Groundsmaster® 3500-G Rotary Mower

Model No. 30809—Serial No. 402700001 and Up

Register at www.Toro.com.
Original Instructions (EN)

3426-701 A

It is a violation of California Public Resource Code Section 4442 or 4443 to use or operate the engine on any forest-covered, brush-covered, or grass-covered land unless the engine is equipped with a spark arrester, as defined in Section 4442, maintained in effective working order or the engine is constructed, equipped, and maintained for the prevention of fire.

The enclosed engine owner's manual is supplied for information regarding the US Environmental Protection Agency (EPA) and the California Emission Control Regulation of emission systems, maintenance, and warranty. Replacements may be ordered through the engine manufacturer.

⚠ WARNING

CALIFORNIA
Proposition 65 Warning

The engine exhaust from this product contains chemicals known to the State of California to cause cancer, birth defects, or other reproductive harm.

Battery posts, terminals, and related accessories contain lead and lead compounds, chemicals known to the State of California to cause cancer and reproductive harm. Wash hands after handling.

Use of this product may cause exposure to chemicals known to the State of California to cause cancer, birth defects, or other reproductive harm.

Introduction

This machine is a multi-purpose machine intended to be used by professional, hired operators in commercial applications. It is designed primarily for mowing grass on well-maintained lawns in parks, golf courses, sports fields, and on commercial grounds. Using this product for purposes other than its intended use could prove dangerous to you and bystanders.

Read this information carefully to learn how to operate and maintain your product properly and to avoid injury and product damage. You are responsible for operating the product properly and safely.

Visit www.Toro.com for product safety and operation training materials, accessory information, help finding a dealer, or to register your product.

Whenever you need service, genuine Toro parts, or additional information, contact an Authorized Service Dealer or Toro Customer Service and have the model and serial numbers of your product ready. Figure 1 identifies the location of the model and serial numbers on the product. Write the numbers in the space provided.

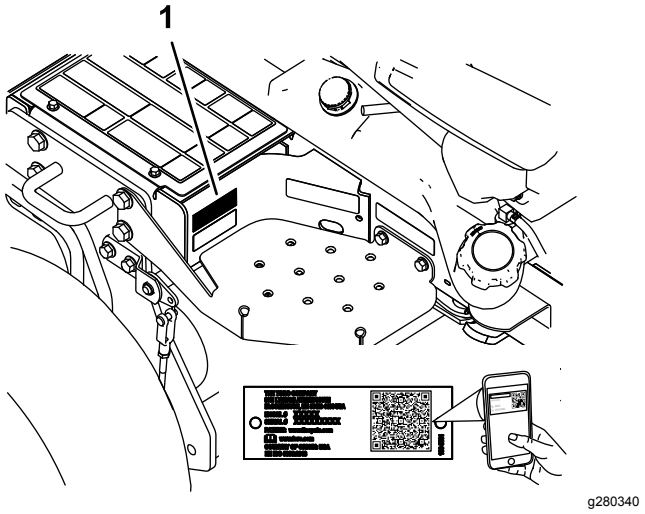

Figure 1

1. Model and serial number location

Model No. _____

Serial No. _____

This manual identifies potential hazards and has safety messages identified by the safety-alert symbol (Figure 2), which signals a hazard that may cause serious injury or death if you do not follow the recommended precautions.

Figure 2

1. Safety-alert symbol

This manual uses 2 words to highlight information. **Important** calls attention to special mechanical information and **Note** emphasizes general information worthy of special attention.

© 2019—The Toro® Company
8111 Lyndale Avenue South
Bloomington, MN 55420

Contact us at www.Toro.com.
Printed in the USA
All Rights Reserved

Contents

Safety 4
General Safety 4
Safety and Instructional Decals 5
Setup 9
1 Activating, Charging, and Connecting the Battery 9
2 Adding the Rear Wheel Ballast 10
3 Checking the Angle Indicator 11
4 Adjusting the Lift Arms 12
5 Adjusting the Carrier Frame 13
6 Adjusting the Height of Cut 13
7 Adjusting the Roller Scraper 14
8 Installing the Mulching Baffle 15
Product Overview 15
Controls 15
Specifications 18
Attachments/Accessories 19
Before Operation 19
Before Operation Safety 19
Filling the Fuel Tank 19
Checking the Engine-Oil Level 21
Checking the Cooling System 21
Checking the Hydraulic System 21
Selecting a Blade 21
Choosing Accessories 22
Checking the Safety-Interlock System 22
During Operation 23
During Operation Safety 23
Starting the Engine 24
Shutting Off the Engine 24
Standard-Control Module (SCM) 25
Operating Tips 27
After Operation 28
General Safety 28
Hauling the Machine 28
Locating the Tie-Down Points 28
Pushing or Towing the Machine 29
Maintenance 30
Maintenance Safety 30
Recommended Maintenance Schedule(s) 30
Daily Maintenance Checklist 32
Pre-Maintenance Procedures 33
Removing the Hood 33
Using the Cutting Unit Service Latch 33
Lubrication 34
Greasing the Bearings and Bushings 34
Engine Maintenance 37
Engine Safety 37
Servicing the Air Cleaner 37
Checking the Engine-Oil Level 37
Changing the Engine Oil and Filter 38
Replacing the Spark Plugs 39
Fuel System Maintenance 40
Replacing the Fuel-Pump Filter 40
Servicing the Fuel Tank 40
Inspecting the Fuel Lines and Connections 40
Electrical System Maintenance 41
Electrical System Safety 41
Servicing the Battery 41
Servicing the Fuses 41
Drive System Maintenance 42
Checking the Tire Pressure 42
Checking the Torque of the Wheel-Lug Nuts 42
Adjusting the Traction Drive for Neutral 42
Cooling System Maintenance 43
Cooling System Safety 43
Checking the Cooling System 43
Cleaning the Cooling System 44
Brake Maintenance 45
Adjusting the Parking Brake 45
Belt Maintenance 45
Servicing the Engine Belts 45
Controls System Maintenance 46
Adjusting the Throttle 46
Hydraulic System Maintenance 47
Hydraulic System Safety 47
Servicing the Hydraulic Fluid 47
Cutting Unit Maintenance 50
Separating the Cutting Units from the Traction Unit 50
Mounting the Cutting Units to the Traction Unit 50
Servicing the Blade Plane 50
Servicing the Front Roller 51
Blade Maintenance 53
Blade Safety 53
Servicing the Blade 53
Storage 55
Storage Safety 55
Preparing the Machine for Storage 55

Safety

This machine has been designed in accordance with ANSI B71.4-2017 and meets these standards when the appropriate ballast is added.

General Safety

This product is capable of amputating hands and feet and of throwing objects. Always follow all safety instructions to avoid serious personal injury.

- Read and understand the contents of this *Operator's Manual* before starting the engine.
- Use your full attention while operating the machine. Do not engage in any activity that causes distractions; otherwise, injury or property damage may occur.
- Do not operate the machine without all guards and other safety protective devices in place and functioning properly on the machine.
- Keep your hands and feet away from rotating parts. Keep clear of the discharge opening.
- Keep bystanders and children out of the operating area. Never allow children to operate the machine.
- Shut off the engine, remove the key (if equipped), and wait for all movement to stop before you leave the operator's position, Allow the machine to cool before adjusting, servicing, cleaning, or storing it.

Improperly using or maintaining this machine can result in injury. To reduce the potential for injury, comply with these safety instructions and always pay attention to the safety-alert symbol ⚠, which means Caution, Warning, or Danger—personal safety instruction. Failure to comply with these instructions may result in personal injury or death.

Safety and Instructional Decals

Safety decals and instructions are easily visible to the operator and are located near any area of potential danger. Replace any decal that is damaged or missing.

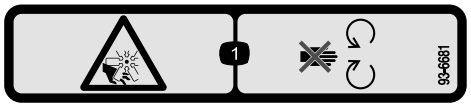

decal93-6681

93-6681

1. Cutting/dismemberment—hazard, fan-stay away from moving parts.

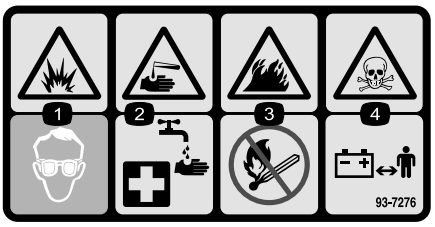

decal93-7276

93-7276

1. Explosion hazard—wear eye protection.
2. Caustic liquid/chemical burn hazard—to perform first aid, flush with water.
3. Fire hazard—no fire, open flames, or smoking.
4. Poison hazard—keep children away from the battery.

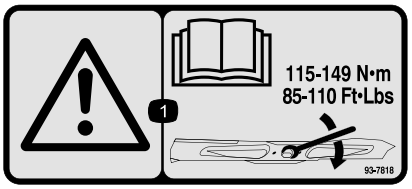

decal93-7818

93-7818

1. Warning—read the *Operator's Manual* for instructions on torquing the blade bolt/nut to 115-149 N·m (85-110 ft-lb).

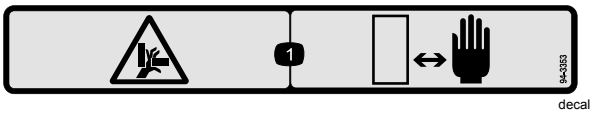

decal94-3353

94-3353

1. Crushing hazard of hand—keep hands away.

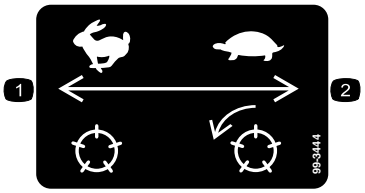

decal99-3444

99-3444

1. Transport speed—fast
2. Mowing speed—slow

---

decal106-6755

106-6755

1. Engine coolant under pressure
2. Explosion hazard—read the *Operator's Manual.*
3. Warning—do not touch the hot surface.
4. Warning—read the *Operator's Manual.*

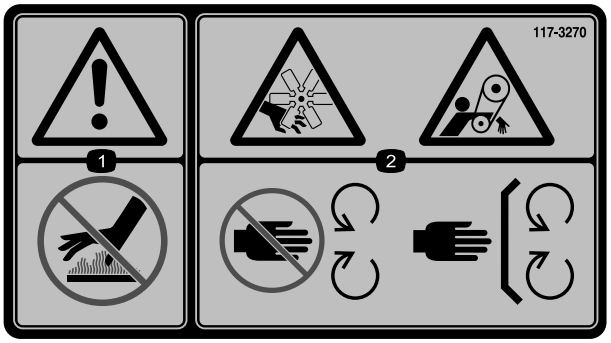

decal117-3270

117-3270

1. Warning—do not touch the hot surface.
2. Cutting/dismemberment hazard, hand; entanglement hazard, belt—stay away from moving parts, keep all guards and shields in place.

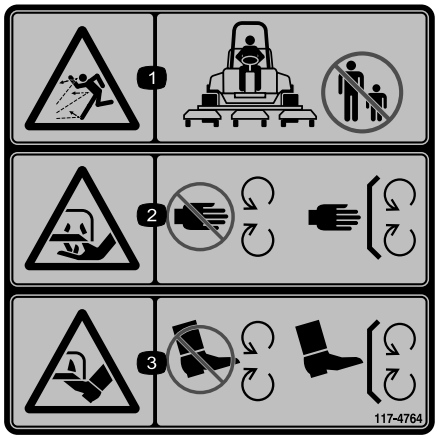

decal117-4764

117-4764

1. Thrown object hazard—keep bystanders away.
2. Cutting hazard of hand, mower blade—stay away from moving parts; keep all guards and shields in place.
3. Cutting hazard of foot, mower blade—stay away from moving parts; keep all guards and shields in place.

decalbatterysymbols

Battery Symbols

Some or all of these symbols are on your battery.

1. Explosion hazard
2. No fire, open flame, or smoking
3. Caustic liquid/chemical burn hazard
4. Wear eye protection.
5. Read the *Operator's Manual*.
6. Keep bystanders away from the battery.
7. Wear eye protection; explosive gases can cause blindness and other injuries.
8. Battery acid can cause blindness or severe burns.
9. Flush eyes immediately with water and get medical help fast.
10. Contains lead; do not discard

decal133-8062

133-8062

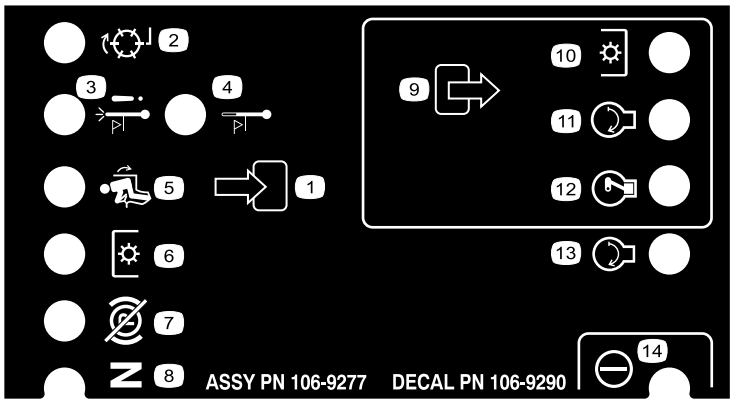

decal106-9290

106-9290

1. Inputs
2. Not active
3. High-temperature shutdown
4. High-temperature warning
5. In seat
6. Power take-off (PTO)
7. Parking brake off
8. Neutral
9. Outputs
10. Power take-off (PTO)
11. Start
12. Energize to run (ETR)
13. Start
14. Power

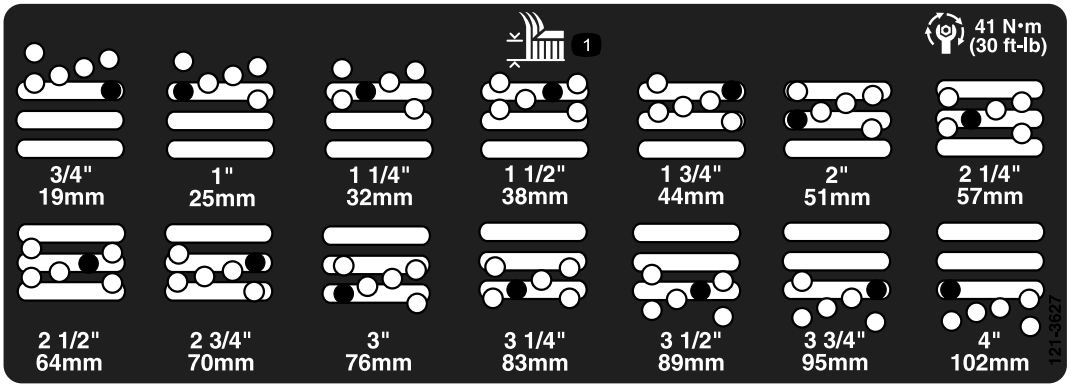

decal121-3627

121–3627

1. Height-of-cut settings

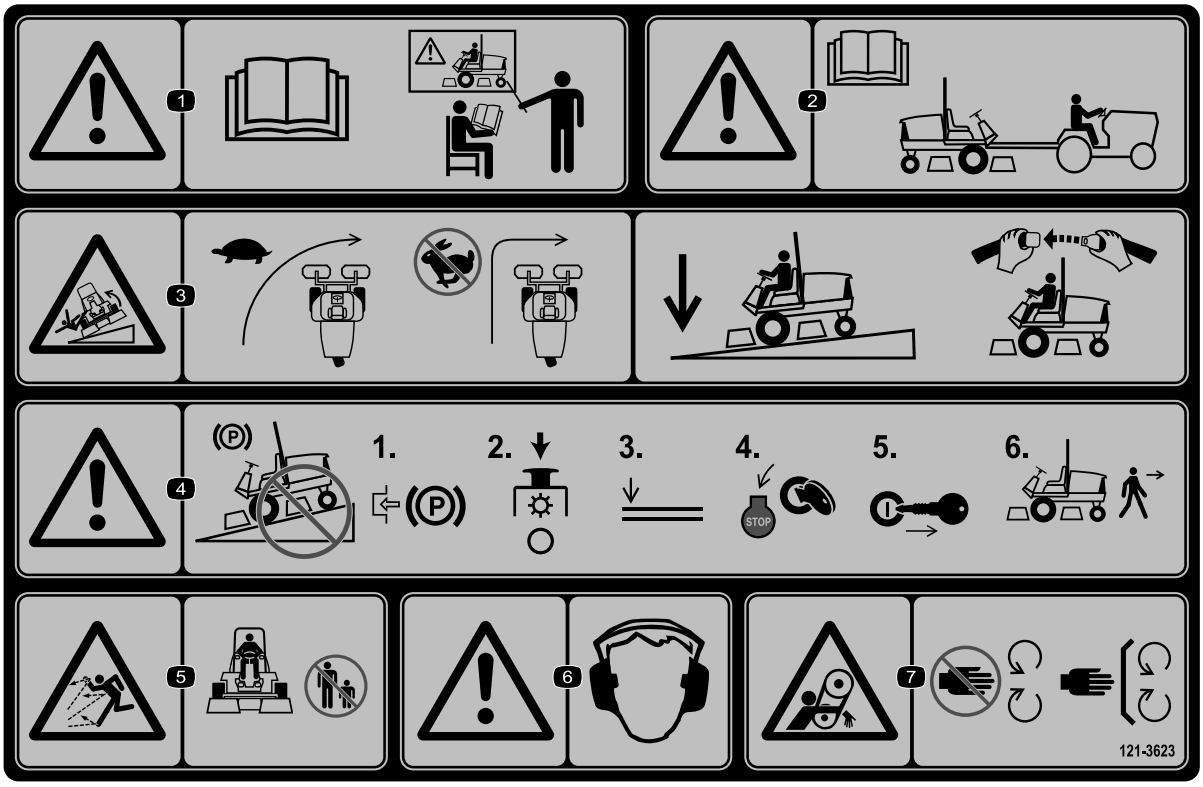

decal121-3623

121-3623

1. Warning—read the *Operator's Manual*; do not operate the machine unless you have received training.
2. Warning—read the *Operator's Manual* before towing the machine.
3. Tipping hazard—slow the machine before turning; when driving on slopes, keep the cutting units lowered and your seatbelt fastened.
4. Warning—do not park on slopes; engage the parking brake, stop the cutting units, lower the attachments, shut off the engine, and remove the key from the ignition before leaving the machine.
5. Thrown object hazard—keep bystanders away.
6. Warning—wear hearing protection.
7. Entanglement hazard—keep away from moving parts; keep all guards and shields in place.

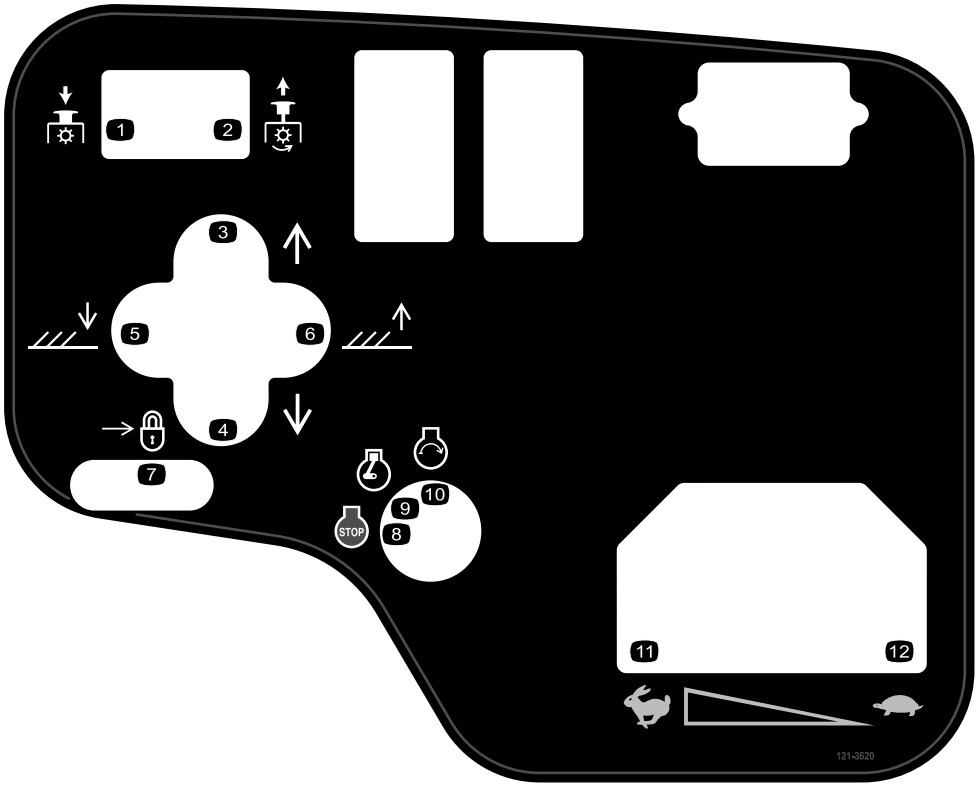

decal121-3620

121-3620

1. PTO—Disengage
2. PTO—Engage
3. Move the cutting units right.
4. Move the cutting units left.
5. Lower the cutting units.
6. Raise the cutting units.
7. Lock
8. Engine—Shut off
9. Engine—Run
10. Engine—Start
11. Fast
12. Slow

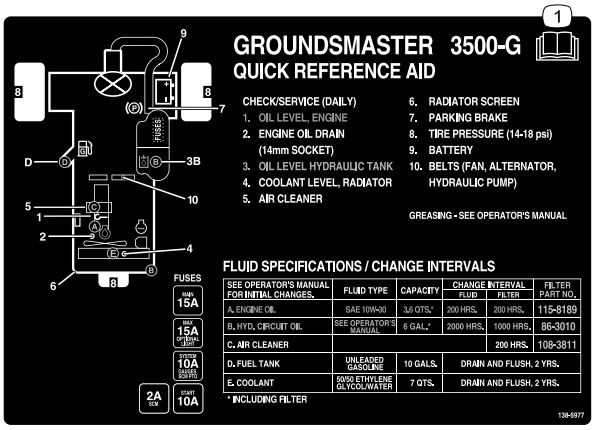

decal138-6977

138-6977

1. Read the *Operator's Manual*.

Setup

Loose Parts

Use the chart below to verify that all parts have been shipped.

Procedure	Description	Qty.	Use
1	No parts required	–	Activate, charge, and connect the battery.
2	No parts required	–	Add the rear wheel ballast.
3	Inclinometer	1	Check the angle indicator.
4	No parts required	–	Adjust the lift arms.
5	No parts required	–	Adjust the carrier frame.
6	No parts required	–	Adjust the height of cut.
7	No parts required	–	Adjust the roller scraper (optional).
8	No parts required	–	Install the mulching baffle (optional).

Media and Additional Parts

Description	Qty.	Use
Operator's Manual	1	Review it before operating the machine.
Engine owner's manual	1	Use it to reference engine information.
Ignition keys	2	Start the engine.

Note: Determine the left and right sides of the machine from the normal operating position.

1

Activating, Charging, and Connecting the Battery

No Parts Required

Procedure

Note: If the battery is not filled with electrolyte or activated, purchase bulk electrolyte with 1.26 specific gravity from a local battery-supply outlet and add it to the battery.

⚠ DANGER

Battery electrolyte contains sulfuric acid which is fatal when consumed and causes severe burns.

- **Do not drink electrolyte and avoid contact with skin, eyes, or clothing. Wear safety glasses to shield your eyes and rubber gloves to protect your hands.**
- **Fill the battery where clean water is always available for flushing the skin.**

1. Remove the battery cover (Figure 3).

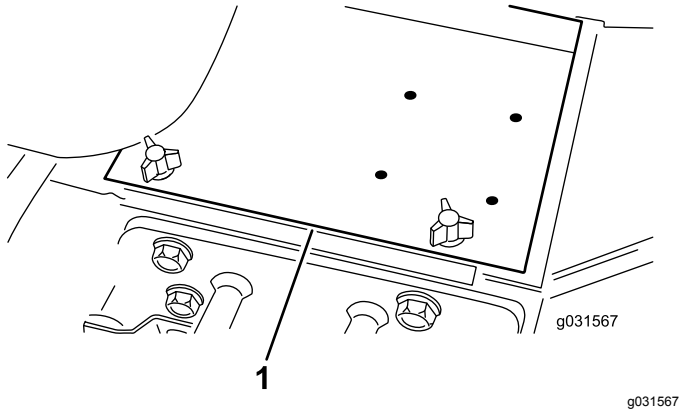

Figure 3

1. Battery cover

2. Remove the filler caps from the battery and slowly fill each cell until the electrolyte is just above the plates.
3. Install the filler caps and connect a 3 to 4 A battery charger to the battery posts.

   Note: Charge the battery at a rate of 3 to 4 A for 4 to 8 hours.

⚠ WARNING

Charging the battery produces gasses that can explode.

- **Keep sparks and flames away from battery.**
- **Never smoke near the battery.**

4. When the battery is charged, disconnect the charger from the electrical outlet and battery posts.
5. Remove the filler caps.
6. Slowly add electrolyte to each cell until the level is up to the fill ring.

   Important: **Do not overfill the battery. Electrolyte will overflow onto other parts of the machine, causing severe corrosion and deterioration.**

7. Install the filler caps.
8. Install the positive cable (red) to the positive (+) terminal and the negative cable (black) to the negative (–) terminal of the battery and secure them with the bolts and nuts (Figure 4).

   Note: Ensure that the positive (+) terminal is all the way onto the post and the cable is positioned snug to the battery. The cable must not contact the battery cover.

⚠ WARNING

Incorrect battery cable routing could damage the tractor and cables, causing sparks. Sparks can cause the battery gases to explode, resulting in personal injury.

- **Always disconnect the negative (black) battery cable before disconnecting the positive (red) cable.**
- **Always connect the positive (red) battery cable before connecting the negative (black) cable.**

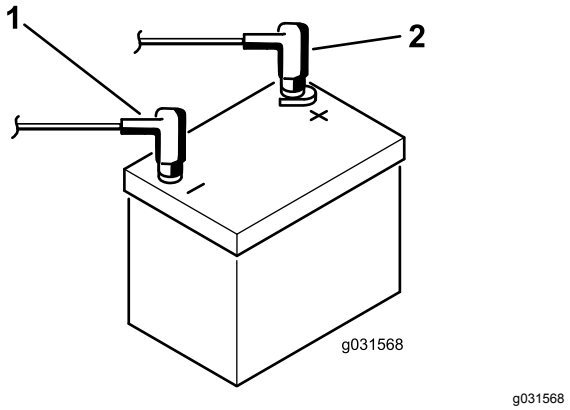

Figure 4

1. Negative (–) battery cable 2. Positive (+) battery cable

Important: **If you ever remove the battery, install the battery-clamp bolts with the bolt heads positioned on the bottom side and the nuts on the top side. If the clamp bolts are reversed, they may interfere with the hydraulic tubes when shifting the cutting units.**

9. Coat both battery connections with Grafo 112X (skin over) grease (Toro Part No. 505-47), petroleum jelly, or light grease to prevent corrosion.
10. Slide the rubber boot over the positive terminal to prevent a possible short from occurring.
11. Install the battery cover.

2

Adding the Rear Wheel Ballast

No Parts Required

Procedure

Add 22.6 kg (50 lb) of calcium-chloride ballast to the rear wheel.

Important: **If a puncture occurs in a tire containing calcium chloride, remove the machine from the turf as quickly as possible. Immediately soak the affected area with water to prevent possible damage to the turf.**

3

Checking the Angle Indicator

Parts needed for this procedure:

1	Inclinometer

Procedure

1. Park the machine on a flat, level surface.
2. Verify that the machine is level by placing a handheld inclinometer (supplied with the machine) on the frame cross rail, by the fuel tank (Figure 5).

   Note: The inclinometer should read at 0° when viewed from the operating position.

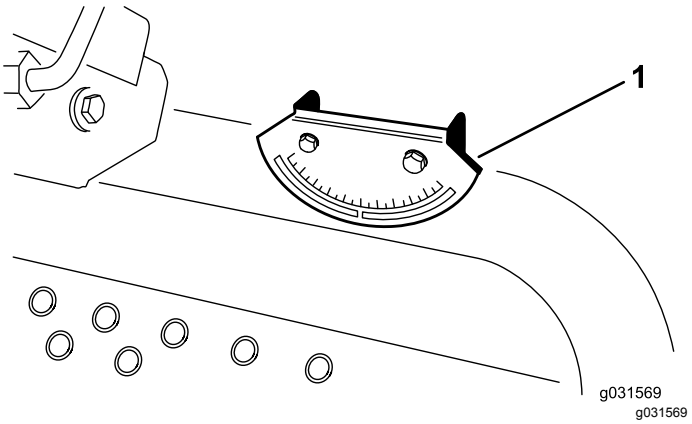

Figure 5

1. Angle indicator

3. If the inclinometer does not read 0°, move the machine to a different location to obtain a 0° reading.

   Note: The angle indicator, mounted on the machine, should now read 0° also.
4. If the angle indicator does not read 0°, loosen the 2 screws and nuts securing the angle indicator to the mounting bracket, adjust the indicator to obtain a 0° reading, and tighten the bolts.

4

Adjusting the Lift Arms

No Parts Required

Procedure

1. Start the engine, raise the cutting units, and ensure that the clearance between each lift arm and the floor-plate bracket is 5 to 8 mm (0.18 to 0.32 inch) as shown in Figure 6.

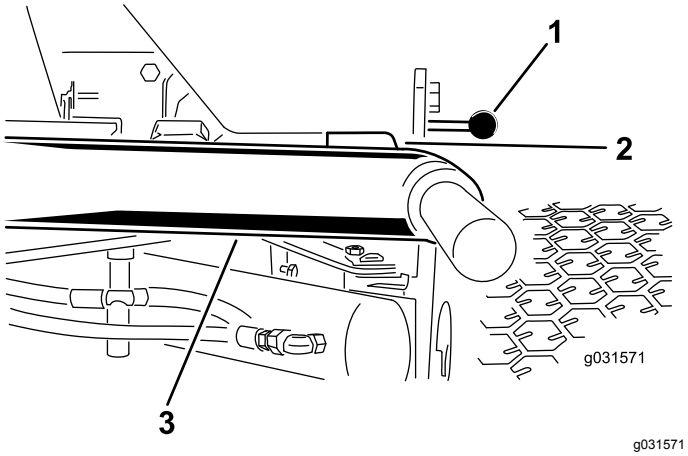

Figure 6

Cutting units removed for clarity

1. Floor-plate bracket
2. Clearance
3. Lift arm

If the clearance is not in this range, adjust it as follows:

A. Back off the stop bolts (Figure 7).

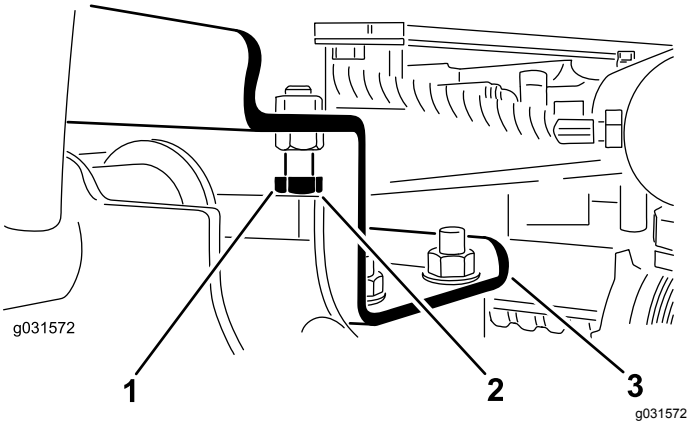

Figure 7

1. Stop bolt
2. Clearance
3. Lift arm

B. Back off the jam nut on the cylinder (Figure 8).

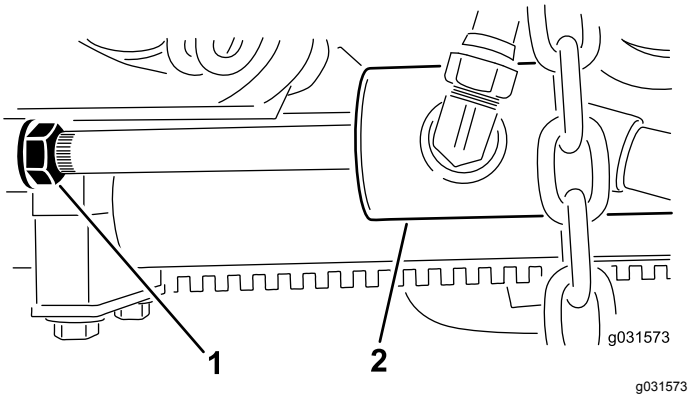

Figure 8

1. Jam nut
2. Front cylinder

C. Remove the pin from the rod end and rotate the clevis.

D. Install the pin and check the clearance.

Note: Repeat the procedure if required.

E. Tighten the clevis jam nut.

2. Ensure that the clearance between each lift arm and stop bolt is 0.13 to 1.02 mm (0.005 to 0.040 inch) as shown in Figure 7.

Note: If the clearance is not in this range, adjust the stop bolts to attain the proper clearance.

3. Start the engine, raise the cutting units, and ensure that the clearance between the wear strap on the top of the rear-cutting-unit wear bar and the bumper strap is 0.51 to 2.54 mm (0.02 to 0.10 inch) as shown in Figure 9.

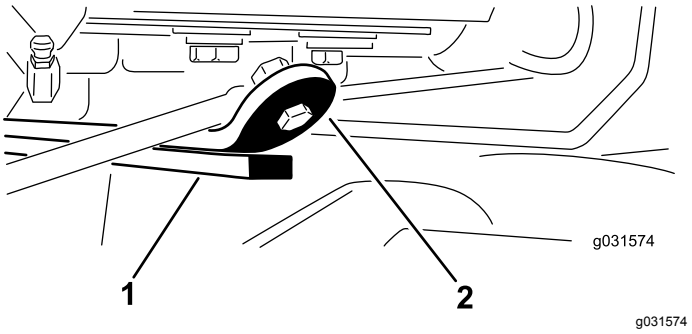

Figure 9

1. Wear bar
2. Bumper strap

If the clearance is not in this range, adjust the rear cylinder as follows:

Note: If the rear-lift arm clunks during transport, you can reduce clearance.

A. Lower the cutting units and back off the jam nut on the cylinder (Figure 10).

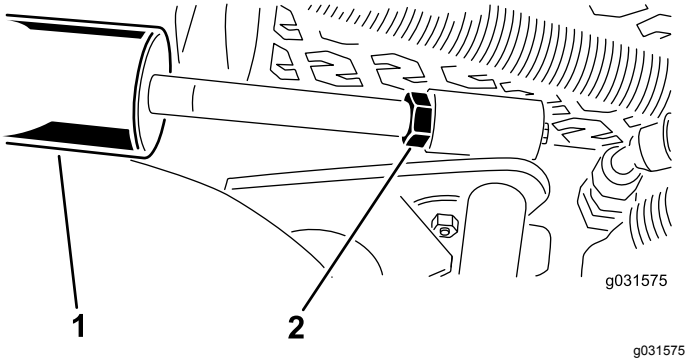

Figure 10

1. Rear cylinder
2. Adjusting nut

B. Grasp the cylinder rod close to the nut with a pliers and rag, and rotate the rod.

C. Raise the cutting units and check the clearance.

Note: Repeat the procedure if required.

D. Tighten the clevis jam nut.

Important: **Lack of clearance at the front stops or rear wear bar could damage the lift arms.**

5

Adjusting the Carrier Frame

No Parts Required

Adjusting the Front Cutting Units

The front and rear cutting units require different mounting positions. The front cutting unit has 2 mounting positions depending on what height of cut and degree of cutting unit rotation you desire.

1. For heights of cut in the 2 to 7.6 cm (3/4 to 3 inches) range, mount the front carrier frames in the lower, front mounting holes (Figure 11).

   Note: This permits more up travel of the cutting units relative to the machine when approaching sudden changes in uphill terrain. It does, however, limit the clearance of the chamber to the carrier when cresting sharp, small hills.

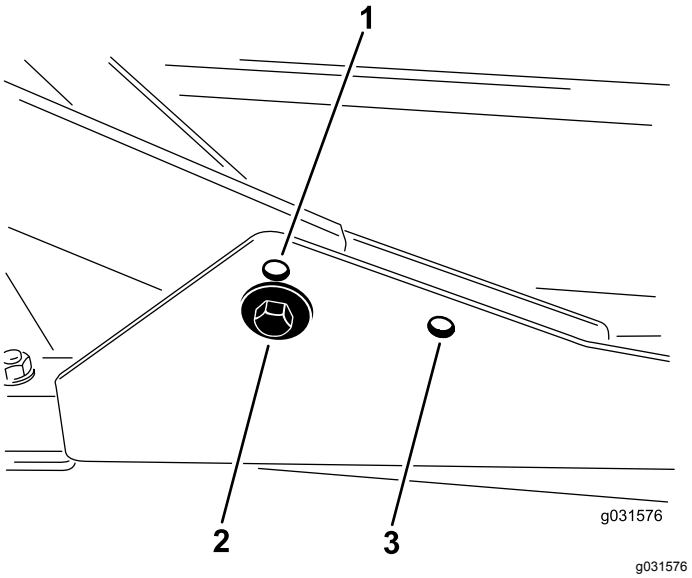

Figure 11

1. Upper, front cutting unit mounting hole
2. Lower, front cutting unit mounting hole
3. Rear cutting unit mounting hole

2. For heights of cut in the 6.3 to 10 cm (2-1/2 to 4 inches) range, mount the front carrier frames in the upper, front mounting holes (Figure 11).

   Note: This increases the chamber to carrier clearance due to the higher position of the cutting chamber, but causes the cutting unit to reach its maximum up travel more quickly.

Adjusting the Rear Cutting Unit

The front and rear cutting units require different mounting positions. The rear cutting unit has 1 mounting position for proper alignment with the Sidewinder® unit under the frame.

For all heights of cut, mount the rear cutting unit in the rear mounting holes (Figure 11).

6

Adjusting the Height of Cut

No Parts Required

Procedure

Important: **This cutting deck often cuts approximately 6 mm (1/4 inch) lower than a reel cutting unit with the same bench setting. It may be necessary to have the rotary cutting decks**

bench set 6 mm (1/4 inch) above that of the reels cutting in the same area.

Important: **Access to the rear cutting units is greatly improved by removing the cutting unit from the machine. If the machine is equipped with a Sidewinder® unit, side-wind the cutting units to the right, remove the rear cutting unit, and slide it out to the right side.**

1. Lower the cutting deck to the ground, shut off the engine, and remove the ignition key.
2. Loosen the bolt securing each height-of-cut bracket to the height-of-cut plate (front and each side) as shown in Figure 12.

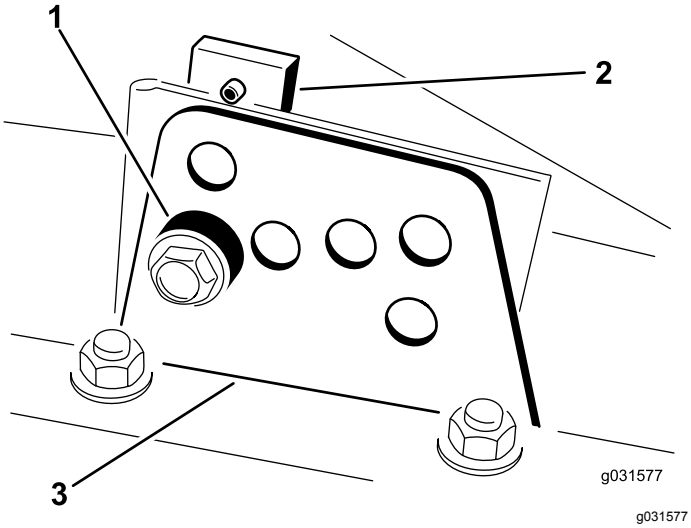

Figure 12

1. Spacer
2. Height-of-cut plate
3. Height-of-cut bracket

3. Beginning with the front adjustment, remove the bolt.
4. While supporting the chamber, remove the spacer (Figure 12).
5. Move the chamber to the desired height of cut and install a spacer into the designated height-of-cut hole and slot (Figure 13).

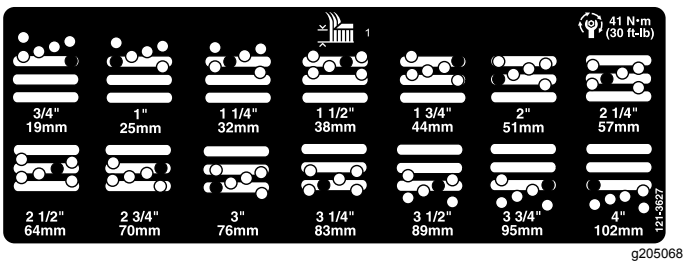

Figure 13

6. Position the tapped plate in line with the spacer.
7. Install the bolt (finger tight).
8. Repeat steps 4 to 7 for each side adjustment.
9. Tighten the 3 bolts to 41 N·m (30 ft-lb).

   Note: Tighten the front bolt first.

   Note: Adjustments of more than 3.8 cm (1-1/2 inches) may require temporary assembly to an intermediate height to prevent binding (for example, changing from 3.1 to 7 cm (1-1/4 to 2-3/4 inches) height of cut).

7

Adjusting the Roller Scraper

Optional

No Parts Required

Procedure

The optional rear roller scraper functions best when there is an even gap of 0.5 to 1 mm (0.02 to 0.04 inch) between the scraper and the roller.

1. Loosen the grease fitting and the mounting screw (Figure 14).

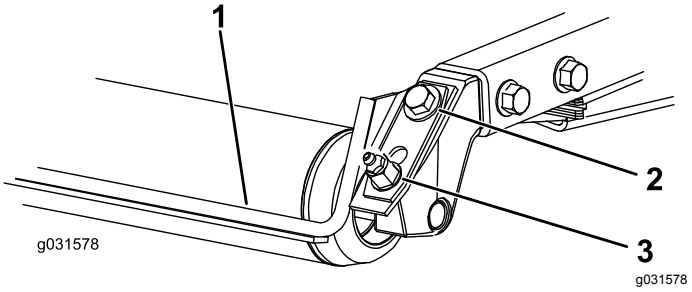

Figure 14

1. Roller scraper
2. Mounting screw
3. Grease fitting

2. Slide the scraper up or down until you obtain a gap of 0.5 to 1 mm (0.02 to 0.04 inch) between the rod and the roller.
3. Tighten the grease fitting and screw to 41 N·m (30 ft-lb) in an alternating sequence.

8

Installing the Mulching Baffle

Optional

No Parts Required

Procedure

Contact your authorized Toro distributor for the correct mulching baffle.

1. Thoroughly clean debris from the mounting holes on the rear wall and left wall of the chamber.
2. Install the mulching baffle in the rear opening and secure it with 5 flange-head bolts (Figure 15).

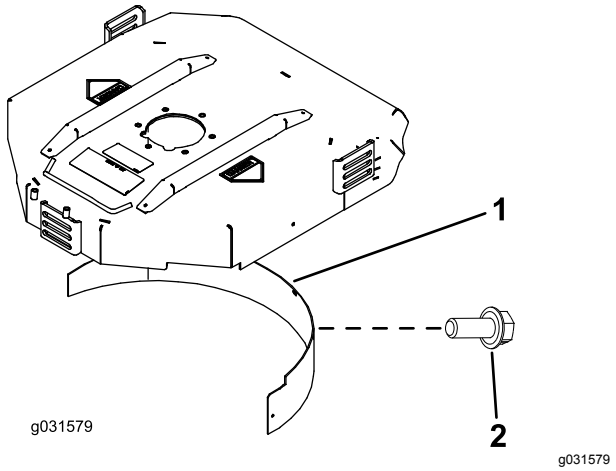

Figure 15

1. Mulching baffle
2. Flange-head bolt

3. Verify that the mulching baffle does not interfere with the tip of the blade and does not protrude inside the surface of the rear chamber wall.

⚠ DANGER

Using the high-lift blade with the mulching baffle could cause the blade to break, resulting in personal injury or death.

Do not use the high-lift blade with the baffle.

Product Overview

Controls

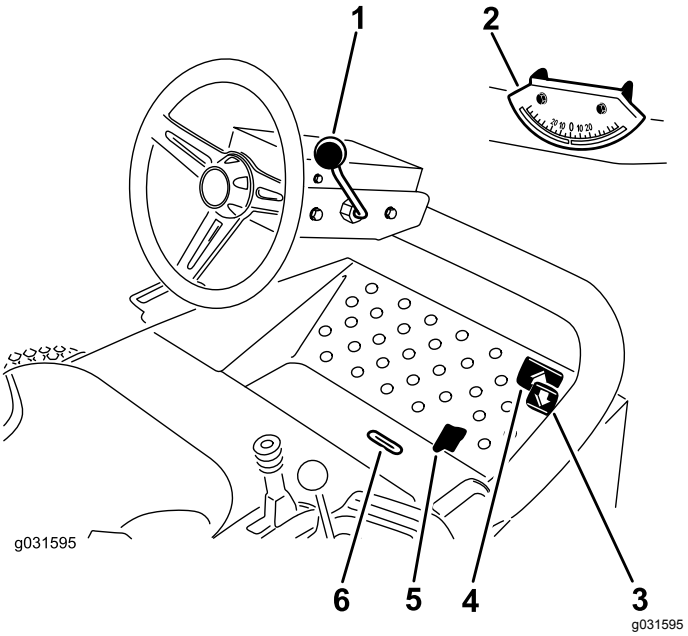

Figure 16

1. Tilt-steering lever
2. Angle indicator
3. Reverse traction pedal
4. Forward traction pedal
5. Mow/transport slide
6. Indicator slot

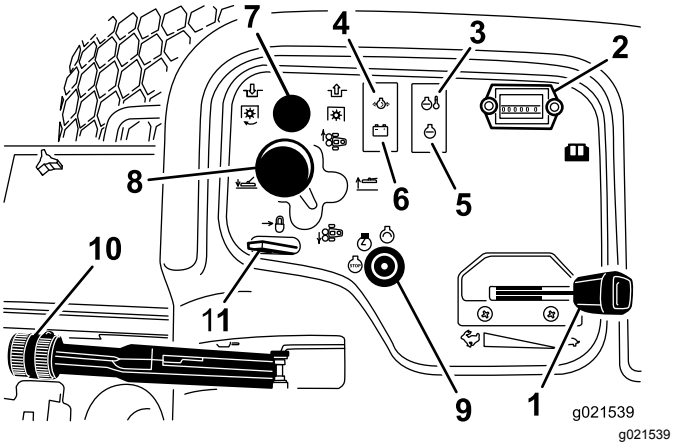

Figure 17

1. Throttle
2. Hour meter
3. Temperature light
4. Oil pressure light
5. Check engine light
6. Alternator light
7. PTO switch
8. Cutting-unit shift lever
9. Ignition switch
10. Parking brake
11. Lift lever lock

Traction Pedals

Press the forward traction pedal to move forward. Press reverse traction pedal to move backward or to assist in stopping when moving forward (Figure 16).

Note: Allow the pedal to move or move it to the NEUTRAL position to stop the machine.

Tilt-Steering Lever

Pull the tilt-steering lever back to tilt the steering wheel to the desired position, then push the lever forward to tighten (Figure 16).

Angle Indicator

The angle indicator indicates the side-hill angle of the machine in degrees (Figure 16).

Key Switch

The key switch is used to start, stop, and preheat the engine. The ignition switch has 3 positions: OFF, ON/PREHEAT, and START. Rotate the key to the ON/PREHEAT position until the glow-plug-indicator light goes out (approximately 7 seconds); then rotate the key to the START position to engage the starter motor. Release the key when the engine starts (Figure 16).

To shut off the engine, rotate the key to the OFF position.

Note: Remove the key from the switch to prevent accidental starting.

Seat-Adjustment Lever

Move the seat-adjustment lever on the side of the seat outward, slide the seat to the desired position, and release the lever to lock the seat into position (Figure 18).

Fuel Gauge

The fuel gauge registers the amount of fuel in the tank (Figure 18).

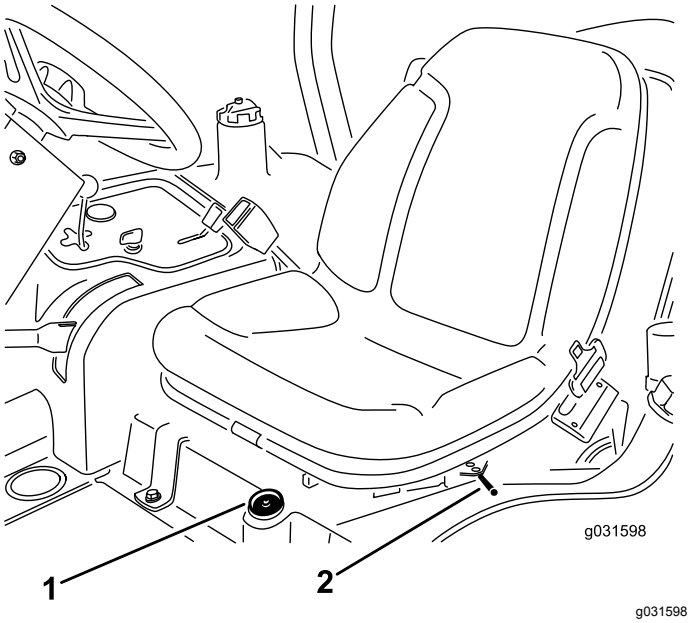

Figure 18

1. Fuel gauge
2. Seat-adjustment lever

Hour Meter

The hour meter indicates the total hours of machine operation. The hour meter starts to function whenever the key switch is in the ON position (Figure 17).

Engine-Coolant-Temperature Warning Light

The temperature warning light glows if the engine coolant temperature is too high. If the coolant temperature rises another 10°, the engine shuts off (Figure 17).

Parking Brake

Whenever the engine is shut off, engage the parking brake to prevent accidental movement of the machine. To engage the parking brake, pull up on the lever (Figure 17).

Note: The engine shuts off when you press the traction pedal with the parking brake engaged.

Oil-Pressure Warning Light

The oil-pressure warning light glows if the engine-oil pressure drops below a safe level (Figure 17). If the oil pressure is low, shut off the engine and determine the cause. Repair the engine-oil system before you start the engine again.

Lift-Lock Lever

Use the lift-lock lever to secure the lift switch (Figure 17) to the RAISE-DECK position when performing maintenance on the cutting unit or when transporting between mowing locations.

Mow/Transport Slide

Using your heel, move the mow/transport slide to the left to transport, and to the right to mow (Figure 16).

Note: The cutting units operate only in the mow position.

Important: **The mow speed is set at the factory to 9.7 km/h (6 mph). You can increase or decrease the mow speed by adjusting the speed-stop screw (Figure 19).**

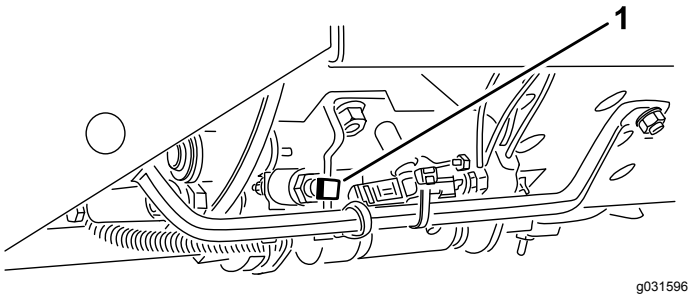

Figure 19

1. Speed-stop screw

Indicator Slot

The indicator slot in the operator platform indicates when the cutting units are in the center position (Figure 16).

Throttle

Move the throttle forward to increase the engine speed and rearward to decrease the engine speed (Figure 17).

PTO Switch

The PTO switch has 2 positions: OUT (start) and IN (stop). Pull the PTO switch out to engage the cutting-unit blades. Push the switch in to disengage the cutting-unit blades (Figure 17).

Cutting-Unit Shift Lever

To lower the cutting units to the ground, move the cutting-unit shift lever forward. To raise the cutting units, pull the shift lever rearward to the RAISE position (Figure 17).

Note: The cutting units do not drop unless the engine is running.

Move the lever to the right or left to move the cutting units in the same direction.

Note: Do this only when the cutting units are raised or if they are on the ground and the machine is moving.

Note: The lever does not need to be held in the forward position while you are lowering the cutting units.

Alternator Light

The alternator light should be off when the engine is running (Figure 17).

Note: If it is on, check the charging system and repair it as necessary.

Specifications

Note: Specifications and design are subject to change without notice.

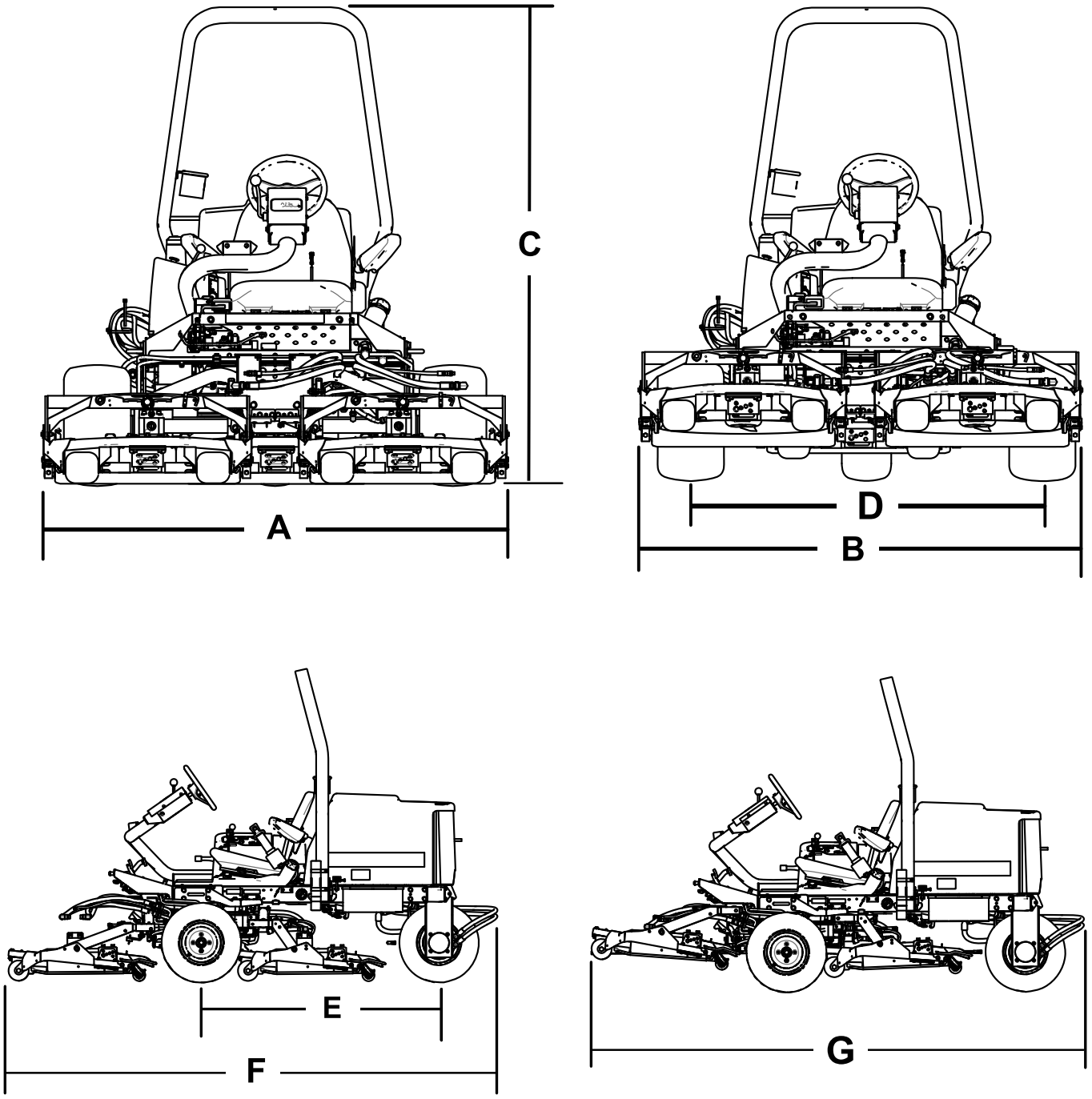

Figure 20

Description	Figure 20 reference	Dimension or Weight
Overall width in mowing position	A	192 cm (75-1/2 inches)
Overall width in transport position	B	184 cm (72-1/2 inches)
Height	C	197 cm (77-1/2 inches)
Wheel-base width	D	146 cm (57-1/2 inches)
Wheel-base length	E	166 cm (65-1/2 inches)

Overall length in mowing position	F	295 cm (116 inches)
Overall length in transport position	G	295 cm (116 inches)
Ground clearance		15 cm (6 inches)
Weight		963 kg (2,124 lb)

Note: Specifications and design are subject to change without notice.

Attachments/Accessories

A selection of Toro approved attachments and accessories is available for use with the machine to enhance and expand its capabilities. Contact your Authorized Service Dealer or authorized Toro distributor or go to www.Toro.com for a list of all approved attachments and accessories.

To ensure optimum performance and continued safety certification of the machine, use only genuine Toro replacement parts and accessories. Replacement parts and accessories made by other manufacturers could be dangerous, and such use could void the product warranty.

Operation

Before Operation

Note: Determine the left and right sides of the machine from the normal operating position.

Before Operation Safety

General Safety

- Never allow children or untrained people to operate or service the machine. Local regulations may restrict the age of the operator. The owner is responsible for training all operators and mechanics.
- Become familiar with the safe operation of the equipment, operator controls, and safety signs.
- Shut off the engine, remove the key (if equipped), and wait for all movement to stop before you leave the operator's position, Allow the machine to cool before adjusting, servicing, cleaning, or storing it.
- Know how to stop the machine and shut off the engine quickly.
- Check that operator-presence controls, safety switches, and guards are attached and functioning properly. Do not operate the machine unless they are functioning properly.
- Before mowing, always inspect the machine to ensure that the blades, blade bolts, and cutting assemblies are in good working condition. Replace worn or damaged blades and bolts in sets to preserve balance.
- Inspect the area where you will use the machine and remove all objects that the machine could throw.

Fuel Safety

- Use extreme care in handling fuel. It is flammable and its vapors are explosive.
- Extinguish all cigarettes, cigars, pipes, and other sources of ignition.
- Use only an approved fuel container.
- Do not remove the fuel cap or fill the fuel tank while the engine is running or hot.
- Do not add or drain fuel in an enclosed space.
- Do not store the machine or fuel container where there is an open flame, spark, or pilot light, such as on a water heater or other appliance.
- If you spill fuel, do not attempt to start the engine; avoid creating any source of ignition until the fuel vapors have dissipated.

Filling the Fuel Tank

- **Fuel tank capacity:** 38 L (10 US gallons)
- **Recommended Fuel:**
  - For best results, use only clean, fresh (less than 30 days old), unleaded gasoline with an octane rating of 87 or higher ((R+M)/2 rating method).
  - Ethanol: Gasoline with up to 10% ethanol (gasohol) or 15% MTBE (methyl tertiary butyl ether) by volume is acceptable. Ethanol and MTBE are not the same. Gasoline with 15% ethanol (E15) by volume is not approved for use. Never use gasoline that contains more than 10% ethanol by volume, such as E15 (contains 15% ethanol), E20 (contains 20% ethanol), or E85 (contains up to 85% ethanol). Using unapproved gasoline may cause

performance problems and/or engine damage which may not be covered under warranty.

– Do not use gasoline containing methanol.

– Do not store fuel either in the fuel tank or fuel containers over the winter unless a fuel stabilizer is used.

– Do not add oil to gasoline.

Important: **Do not use fuel additives other than a fuel stabilizer/conditioner. Do not use fuel stabilizers with an alcohol base such as ethanol, methanol, or isopropanol.**

1. Clean the area around the fuel-tank cap (Figure 21).
2. Remove the fuel-tank cap.
3. Fill the tank to the bottom of the filler neck. **Do not overfill.** Install the cap.
4. To prevent a fire hazard, wipe up any spilled fuel.

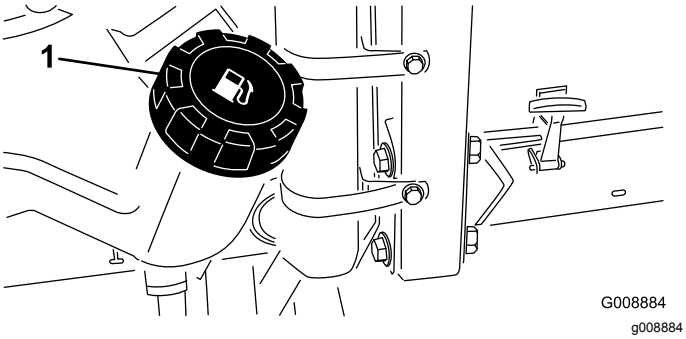

Figure 21

1. Fuel-tank cap

⚠ DANGER

In certain conditions, fuel is extremely flammable and highly explosive. A fire or explosion from fuel can burn you and others and can damage property.

- **Before removing the fuel-tank cap, make sure that the vehicle is positioned on a level surface. Open the fuel-tank cap slowly.**
- **Fill the fuel tank outdoors, in an open area, when the engine is cold. Wipe up any fuel that spills.**
- **Never fill the fuel tank inside an enclosed trailer.**
- **Do not fill the fuel tank completely full. Add fuel to the fuel tank until the level is 6 to 13 mm (1/4 to 1/2 inch) below the bottom of the filler neck. This empty space in the tank allows fuel to expand.**
- **Never smoke when handling fuel, and stay away from an open flame or where fuel fumes may be ignited by a spark.**
- **Store fuel in an approved container and keep it out of the reach of children. Never buy more than a 30-day supply of fuel.**
- **Do not operate without entire exhaust system in place and in proper working condition.**

⚠ DANGER

In certain conditions during fueling, static electricity can be released causing a spark which can ignite the fuel vapors. A fire or explosion from fuel can burn you and others and can damage property.

- **Always place the fuel containers on the ground away from your vehicle before filling.**
- **Do not fill the fuel containers inside a vehicle or on a truck or trailer bed because interior carpets or plastic truck bed liners may insulate the container and slow the loss of any static charge.**
- **When practical, remove gas-powered equipment from the truck or trailer and refuel the equipment with the wheels on the ground.**
- **If this is not possible, refuel such equipment on a truck or trailer from a portable container rather than from a fuel dispenser nozzle.**
- **If a fuel dispenser nozzle must be used, keep the nozzle in contact with the rim of the fuel tank or container opening at all times until fueling is complete.**

Checking the Engine-Oil Level

Before you start the engine and use the machine, check the oil level in the engine crankcase; refer to Checking the Engine-Oil Level (page 37).

Checking the Cooling System

Before you start the engine and use the machine, check the cooling system; refer to Checking the Cooling System (page 21).

Checking the Hydraulic System

Before you start the engine and use the machine, check the hydraulic system; refer to Checking the Hydraulic Fluid Level (page 48).

Selecting a Blade

Standard Combination Sail

This blade was designed to provide excellent lift and dispersion in almost any condition. If more or less lift and discharge velocity is required, consider a different blade.

Attributes: Excellent lift and dispersion in most conditions

Angled Sail

The blade generally performs best in lower heights of cut—1.9 to 6.4 cm (3/4 to 2-1/2 inches).

Attributes:

- Discharge remains more even at lower heights of cut.
- Discharge has less tendency to throw left and thus a cleaner look around bunkers and fairways.
- Lower power requirement at lower heights and dense turf.

High-Lift Parallel Sail

The blade generally performs better in the higher heights of cut—7 to 10 cm (2 to 4 inches).

Attributes:

- More lift and higher discharge velocity
- Sparse or limp turf is picked up significantly at higher heights of cut
- Wet or sticky clippings are discharged more efficiently reducing congestion in the cutting unit.
- Requires more horsepower to run
- Tends to discharge further left and can tend to windrow at lower heights of cut

⚠ WARNING

Using a high-lift blade with the mulching baffle could cause the blade to break, resulting in personal injury or death.

Do not use the high-lift blade with the mulching baffle.

Atomic Blade

This blade was designed to provide excellent leaf mulching.

Attribute: Excellent leaf mulching

Choosing Accessories

Optional Equipment Configurations

	Angle Sail Blade	High-Lift, Parallel-Sail Blade *(Do not use with the mulching baffle)*	Mulching Baffle	Roller Scraper
Grass Cutting: 1.9 to 4.4 cm (3/4 to 1-3/4 inches) height of cut	Recommended in most applications	May work well in light or sparse turf	Has been shown to improve dispersion and after-cut performance on northern grasses that are cut at least 3 times per week and less than 1/3 of the grass blade is removed. ***Do not use with the high-lift, parallel-sail blade***	Use it whenever the rollers build up with grass or large, flat grass clumps are seen. The scrapers may increase clumping in certain applications.
Grass Cutting: 5 to 6.4 cm (2 to 2-1/2 inches) height of cut	Recommended for thick or lush turf	Recommended for light or sparse turf		
Grass Cutting: 7 to 10 cm (2-3/4 to 4 inches) height of cut	May work well in lush turf	Recommended in most applications		
Leaf Mulching	Recommended for use with the mulching baffle	**Not Allowed**	Use with combination sail or angle sail blade only	
Pros	Even discharge at lower height of cut; cleaner look around bunkers and fairways; lower power requirements	More lift and higher discharge velocity; sparse or limp turf is picked up at high height of cut; wet or sticky clippings are discharged efficiently	May improve dispersion and appearance in certain grass cutting applications; very good for leaf mulching	Reduces roller buildup in certain applications
Cons	Does not lift the grass well in high height-of-cut applications; wet or sticky grass has a tendency to build up in the chamber, leading to poor quality of cut and higher power requirements	Requires more power to run in some applications; tends to windrow at lower height of cut in lush grass; do not use with the mulching baffle	Grass will build up in the chamber if you attempt to remove too much grass with the baffle in place	

Checking the Safety-Interlock System

Service Interval: Before each use or daily

⚠ CAUTION

If the safety-interlock switches are disconnected or damaged, the machine could operate unexpectedly and cause personal injury.

- **Do not tamper with the safety systems.**
- **Check the operation of the switches daily and replace any damaged switches before operating the machine.**

1. Drive the machine slowly to a large, open area.
2. Lower the cutting unit(s), shut off the engine, and engage the parking brake.
3. While sitting on the seat, the engine must not start with either the cutting-unit switch engaged or the traction pedal engaged.

   Note: Correct the problem if it is not operating properly.
4. While sitting on the seat, put the traction pedal in NEUTRAL, the parking brake is DISENGAGED, and the cutting unit switch in the OFF position.

   Note: The engine should start. Rise from the seat and slowly press the traction pedal, and the engine should shut off in 1 to 3 seconds. If it does not shut off, there is a malfunction in the interlock system that you should correct before resuming operation.

Note: The machine is equipped with an interlock switch on the parking brake. The engine shuts off when you press the traction pedal with the parking brake engaged.

During Operation

During Operation Safety

General Safety

- The owner/operator can prevent and is responsible for accidents that may cause personal injury or property damage.
- Wear appropriate clothing, including eye protection; long pants; substantial, slip-resistant footwear; and hearing protection. Tie back long hair and do not wear loose clothing or loose jewelry.
- Do not operate the machine while ill, tired, or under the influence of alcohol or drugs.
- Use your full attention while operating the machine. Do not engage in any activity that causes distractions; otherwise, injury or property damage may occur.
- Before you start the engine, ensure that all drives are in neutral, the parking brake is engaged, and you are in the operating position.
- Do not carry passengers on the machine and keep bystanders and children out of the operating area.
- Operate the machine only in good visibility to avoid holes or hidden hazards.
- Avoid mowing on wet grass. Reduced traction could cause the machine to slide.
- Keep your hands and feet away from rotating parts. Keep clear of the discharge opening.
- Look behind and down before backing up to be sure of a clear path.
- Use care when approaching blind corners, shrubs, trees, or other objects that may obscure your vision.
- Stop the blades whenever you are not mowing.
- Stop the machine, remove the key, and wait for all moving parts to stop before inspecting the attachment after striking an object or if there is an abnormal vibration in the machine. Make all necessary repairs before resuming operation.
- Slow down and use caution when making turns and crossing roads and sidewalks with the machine. Always yield the right-of-way.
- Disengage the drive to the cutting unit, shut off the engine, remove the key, and wait for all moving parts to stop before adjusting the height of cut (unless you can adjust it from the operating position).
- Operate the engine only in well-ventilated areas. Exhaust gases contain carbon monoxide, which is lethal if inhaled.
- Never leave a running machine unattended.
- Before you leave the operator's position, do the following:
  - Park the machine on a level surface.
  - Disengage the power takeoff and lower the attachments.
  - Engage the parking brake.
  - Shut off the engine and remove the key (if equipped).
  - Wait for all movement to stop.
- Operate the machine only in good visibility and appropriate weather conditions. Do not operate the machine when there is the risk of lightning.
- Do not use the machine as a towing vehicle.
- Use accessories, attachments, and replacement parts approved by Toro only.

Rollover Protection System (ROPS) Safety

- Do not remove any of the ROPS components from the machine.
- Ensure that the seat belt is attached and that you can release it quickly in an emergency.
- Check carefully for overhead obstructions and do not contact them.
- Keep the ROPS in safe operating condition by thoroughly inspecting it periodically for damage and keeping all the mounting fasteners tight.
- Replace damaged ROPS components. Do not repair or alter them.
- Always use the seat belt with the roll bar in the raised position.
- The ROPS is an integral safety device. Keep a folding roll bar in the raised and locked position, and use the seat belt when operating the machine with the roll bar in the raised position.
- Lower a folding roll bar temporarily only when necessary. Do not wear the seat belt when the roll bar is folded down.
- Be aware that there is no rollover protection when a folded roll bar is in the down position.
- Check the area that you will be mowing and never fold down a folding roll bar in areas where there are slopes, drop-offs, or water.

Slope Safety

- Slopes are a major factor related to loss of control and rollover accidents, which can result in severe injury or death. You are responsible for safe slope

operation. Operating the machine on any slope requires extra caution.

- Evaluate the site conditions to determine if the slope is safe for machine operation, including surveying the site. Always use common sense and good judgment when performing this survey.
- Review the slope instructions listed below for operating the machine on slopes and to determine whether you can operate the machine in the conditions on that day and at that site. Changes in the terrain can result in a change in slope operation for the machine.
- Avoid starting, stopping, or turning the machine on slopes. Avoid making sudden changes in speed or direction. Make turns slowly and gradually.
- Do not operate a machine under any conditions where traction, steering, or stability is in question.
- Remove or mark obstructions such as ditches, holes, ruts, bumps, rocks, or other hidden hazards. Tall grass can hide obstructions. Uneven terrain could overturn the machine.
- Be aware that operating the machine on wet grass, across slopes, or downhill may cause the machine to lose traction. Loss of traction to the drive wheels may result in sliding and a loss of braking and steering.
- Use extreme caution when operating the machine near drop-offs, ditches, embankments, water hazards, or other hazards. The machine could suddenly roll over if a wheel goes over the edge or the edge caves in. Establish a safety area between the machine and any hazard.
- Identify hazards at the base of the slope. If there are hazards, mow the slope with a pedestrian-controlled machine.
- If possible, keep the cutting unit(s) lowered to the ground while operating on slopes. Raising the cutting unit(s) while operating on slopes can cause the machine to become unstable.
- Use extreme caution with grass-collection systems or other attachments. These can change the stability of the machine and cause a loss of control.

Starting the Engine

1. Ensure that the parking brake is engaged and the cutting-unit-drive switch is in the DISENGAGE position.
2. Remove your foot from the traction pedal and ensure that the pedal is in the NEUTRAL position.
3. Move the throttle lever to the 1/2-throttle position.
4. Insert the key into the switch and rotate it to the START position to engage the starter motor.

   Important: **To prevent overheating of the starter motor, do not engage the starter for longer than 15 seconds. After 10 seconds of continuous cranking, wait 60 seconds before engaging the starter motor again.**
5. Release the key when the engine starts.

   Note: The key automatically moves to the ON/RUN position.
6. When you start the engine for the first time or after overhauling the engine, operate the machine in forward and reverse for 1 to 2 minutes.

   Note: Also, operate the lift lever and cutting-unit-drive switch to ensure that all parts operate properly.
7. Turn the steering wheel to the left and to the right to check the steering response, then shut off the engine to check for oil leaks, loose parts, and any other malfunctions.

Shutting Off the Engine

1. Move the throttle control to the IDLE position.
2. Move the cutting-unit-drive switch to the DISENGAGE position.
3. Rotate the key switch to the OFF position.
4. Remove the key from the switch to prevent accidental starting.

Standard-Control Module (SCM)

The Standard-Control Module (SCM) is a potted electronic device produced in a 1-size-fits-all configuration. The module uses solid state and mechanical components to monitor and control standard, electrical features required for safe product operation.

The module-monitor input includes neutral, parking brake, PTO, start, backlap, and high temperature. The module energizes outputs including PTO, Starter, and ETR (energize to run) solenoid.

The module is divided into inputs and outputs. Inputs and outputs are identified by green LED indicators mounted on the printed circuit board.

The start-circuit input is energized by 12 VDC. All other inputs are energized when the circuit is closed to ground. Each input has an LED that illuminates when the specific circuit is energized. Use the input LEDs for switch and input-circuit troubleshooting.

Output circuits are energized by an appropriate set of input conditions. The 3 outputs include PTO, ETR, and START. Output LEDs monitor the relay condition, indicating the presence of voltage at 1 of 3 specific output terminals.

Output circuits do not determine output-device integrity, so electrical troubleshooting includes output-LED inspection, conventional device, and wire-harness-integrity testing. Measure the disconnected-component impedance, impedance through the wire harness (disconnect at SCM), or by temporarily ”test energizing” the specific component.

The SCM does not connect to an external computer or handheld device, cannot be programmed again, and does not record intermittent fault troubleshooting data.

The decal on the SCM includes only symbols. The 3 LED output symbols are shown in the output box, while all other LEDs are inputs as shown in Figure 22.

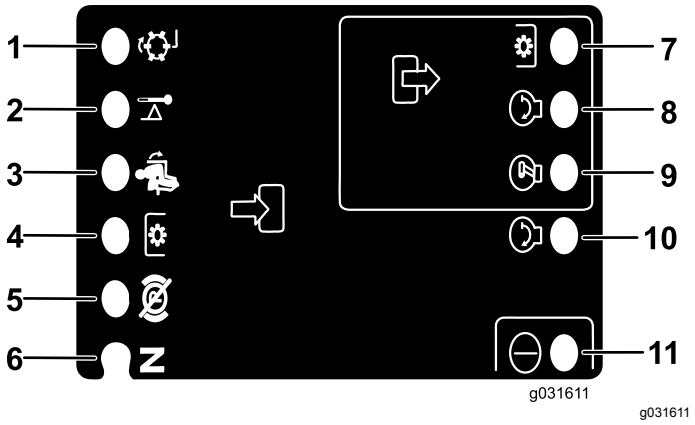

Figure 22

1. Backlap (input)
2. High temperature (input)
3. In seat (input)
4. PTO switch (input)
5. Parking brake—off (input)
6. Neutral position (input)
7. PTO (output)
8. Start (output)
9. ETR (output)
10. Start (input)
11. Power (input)

Here are the logical troubleshooting steps for the SCM device.

1. Determine the output fault that you are trying to resolve (PTO, START, or ETR).
2. Move key switch to the ON position and ensure that the red, power LED illuminates.
3. Move all of the input switches to ensure that all LEDs change state.
4. Position the input devices at the appropriate position to achieve the appropriate output.

   Note: Use the following logic chart to determine the appropriate input condition.
5. Review the following repair options if a specific output LED illuminates.
   - If a specific output LED illuminates without the appropriate output function, check the output harness, connections, and component.

     Note: Repair as required.
   - If a specific output LED does not illuminate, check both fuses.
   - If a specific output LED does not illuminate and the inputs are in the appropriate condition, install a new SCM and determine if the fault disappears.

Each row (across) in the logic chart below identifies input and output requirements for each specific product function. Product functions are listed in the left column. Symbols identify specific circuit condition, including energized to voltage, closed to ground, and open to ground.

Inputs									Outputs		
Function	Power ON	In NEUTRAL	Start ON	Brake ON	PTO ON	In Seat	Hi Temp	Backlap	Start	ETR	PTO
Start	—	—	+	O	O	—	O	O	+	+	O
Run (Off Unit)	—	—	O	O	O	O	O	O	O	+	O
Run (On Unit)	—	O	O	—	O	—	O	O	O	+	O
Mow	—	O	O	—	—	—	O	O	O	+	+
Backlap	—	—	O	O	—	O	O	—	O	+	+
Hi Temp	—		O				—		O	O	O

- (–) Indicates a circuit closed to ground—LED On
- (O) Indicates a circuit open to ground or de-energized—LED Off
- (+) Indicates an energized circuit (clutch coil, solenoid, or start input)—LED On
- A blank indicates a circuit that is not involved with the logic chart.

To troubleshoot, turn on the key without starting the engine. Identify the specific function that does not work and work across the logic chart. Inspect the condition of each input LED to ensure that it matches the logic chart.

If the input LEDs are correct, check the output LED. If the output LED illuminates but the device is not energized, measure the available voltage at the output device, the continuity of the disconnected device, and the potential voltage on the ground circuit (floating ground).

Operating Tips

Creating a Site Survey

To perform a site survey, lay a 1.25 m plank (4 ft long 2 x 4) on the slope surface and measure the angle of the slope with the inclinometer provided with the machine. The plank (2 x 4) will average the slope but will not take into consideration dips or holes which can cause a sudden change in side hill angle. After completing the site survey, refer to Before Operation Safety (page 19).

Additionally, the machine is equipped with an angle indicator mounted on the steering tube. This indicates the side hill angle that the machine is on.

Operating the Machine

- Start the engine and run it at HALF IDLE until it warms up. Push the throttle lever all the way forward, lift the cutting units, disengage the parking brake, press the forward traction pedal, and carefully drive to an open area.
- Practice moving forward and reverse, and starting and stopping the machine. To stop the machine, remove your foot from the traction pedal and let it return to NEUTRAL or press down on the reverse pedal. When going downhill in the machine, you may need to use the reverse pedal to stop.
- Practice driving around obstacles with the cutting units up and down. Be careful when driving between narrow objects so that you do not damage the machine or cutting units.
- On the Sidewinder unit, get accustomed to the reach of the cutting units so that you do not hang them up or damage them.
- Do not shift the cutting units from side to side unless they are down and the machine is moving, or the cutting units are in the transport position. Shifting the cutting units when they are down and the machine is not moving may damage the turf.
- Always drive slowly in rough areas.
- The Sidewinder unit offers up to a maximum of 33 cm (13 inches) of overhang, allowing you to trim closer to the edge of sand traps and other obstacles, while, at the same time, keeping the tractor tires as far away from the edge of traps or water hazards as possible.
- If an obstacle is in the way, shift the cutting units to mow around it.
- When transporting the machine from 1 work area to another, raise the cutting units to the fully upward position, move the mow/transport slide to the left to transport, and place the throttle in the FAST position.

Changing Mowing Patterns

Change mowing patterns often to minimize a poor after-cut appearance from repeatedly mowing in the same direction.

Understanding Counterbalance

The counterbalance system maintains hydraulic back pressure on the cutting unit lift cylinders. This pressure improves traction by transferring the cutting unit weight to the mower-drive wheels. The counterbalance pressure has been set at the factory to an optimal balance of after-cut appearance and traction capability in most turf conditions.

Decreasing the counterbalance setting can produce a more stable cutting unit, but can decrease the traction capability. Increasing the counterbalance setting can increase the traction capability, but may result in a poor after-cut appearance. Refer to the machine *Service Manual* for your traction unit for instructions to adjust the counterbalance pressure.

Resolving After-Cut Appearance

Refer to the *After-cut Appearance Troubleshooting Guide* available at www.Toro.com.

Using Proper Mowing Techniques

- To begin cutting, engage the cutting units, then approach the mowing area slowly. Once the front cutting units are over the mowing area, lower the cutting units.
- To achieve the professional straight-line cut and striping that is desirable for some applications, find a tree or other object in the distance and drive straight toward it.
- As soon as the front cutting units reach the edge of the mowing area, lift the cutting units, and perform a teardrop-shaped turn to quickly line up for your next pass.
- To mow around bunkers, ponds, or other contours easily, use the Sidewinder unit and move the control lever to the left or right, depending on your mowing application. You can also shift the cutting units to vary the tire tracking.
- The cutting units tend to throw grass to the left side of the machine. If you are trimming around bunkers, mow in a clockwise direction to prevent throwing clippings into the bunker.
- Bolt-in mulching baffles are available for the cutting units. The mulching baffles perform well when you maintain turf on a regular schedule to avoid removing more than 25 mm (1 inch) of growth per cutting. When you cut too much growth

with the mulching baffles installed, the after-cut appearance may deteriorate and the observed power to cut the turf increases. The mulching baffles also perform well for shredding leaves in the fall.

Selecting the Proper Height-of-Cut Setting to Suit Conditions

Remove no more than approximately 25 mm (1 inch), or 1/3 of the grass blade when cutting. In exceptionally lush and dense grass, you may need to raise your height-of-cut setting.

Mowing with Sharp Blades

A sharp blade cuts cleanly and without tearing or shredding the grass blades like a dull blade. Tearing and shredding causes the grass to turn brown at the edges, which impairs growth and increases susceptibility to diseases. Ensure that the blade is in good condition and that there is a full sail.

Checking the Condition of the Cutting Unit

Ensure that the cutting chambers are in good condition. Straighten any bends in the chamber components to ensure correct blade tip/chamber clearance.

Maintaining the Machine After Mowing

After mowing, thoroughly wash the machine with a garden hose with no nozzle to avoid contamination and damage to the seals and bearings caused by excessive water pressure. Ensure that the radiator and oil cooler are kept free of dirt or grass clippings. After cleaning, inspect the machine for possible hydraulic-fluid leaks, damage, or wear to the hydraulic and mechanical components, and check the cutting-unit blades for sharpness.

Important: **After washing the machine, move the Sidewinder mechanism from left to right several times to remove the water between the bearing blocks and cross tube.**

After Operation

General Safety

- Shut off the engine, remove the key (if equipped), and wait for all movement to stop before you leave the operator's position, Allow the machine to cool before adjusting, servicing, cleaning, or storing it.
- Clean grass and debris from the cutting units, mufflers, and engine compartment to help prevent fires. Clean up oil or fuel spills.
- If the cutting units are in the transport position, use the positive mechanical lock (if available) before you leave the machine unattended.
- Allow the engine to cool before storing the machine in any enclosure.
- Remove the key and shut off the fuel (if equipped) before storing or hauling the machine.
- Never store the machine or fuel container where there is an open flame, spark, or pilot light, such as on a water heater or on other appliances.
- Maintain and clean the seat belt(s) as necessary

Hauling the Machine

- Remove the key and shut off the fuel (if equipped) before storing or hauling the machine.
- Use care when loading or unloading the machine into a trailer or a truck.
- Use full-width ramps for loading the machine into a trailer or a truck.
- Tie the machine down securely.

Locating the Tie-Down Points

There are tie downs located at the front and rear sides of the machine (Figure 23).

Note: Use properly-rated DOT-approved straps in 4 corners to tie down the machine.

- 2 on the front of the operator's platform
- Rear tire

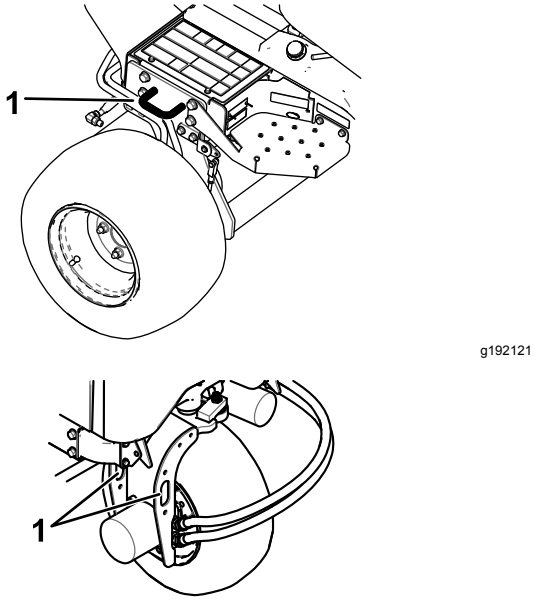

Figure 23

1. Tie-down point

Pushing or Towing the Machine

In an emergency, you can move the machine a very short distance by actuating the bypass valve in the hydraulic pump and pushing or towing the machine.

Important: **Do not push or tow the machine faster than 3 to 4.8 km/h (2 to 3 mph). If you push or tow at a faster speed, internal transmission damage may occur. If you must move the machine a considerable distance, transport it on a truck or trailer.**

Important: **The bypass valve must be open whenever you push or tow the machine. Close the valve once you have pushed or towed the machine to the desired location.**

1. Locate the bypass valve on the pump (Figure 24) and loosen it by rotating 90° (1/4 of a turn).

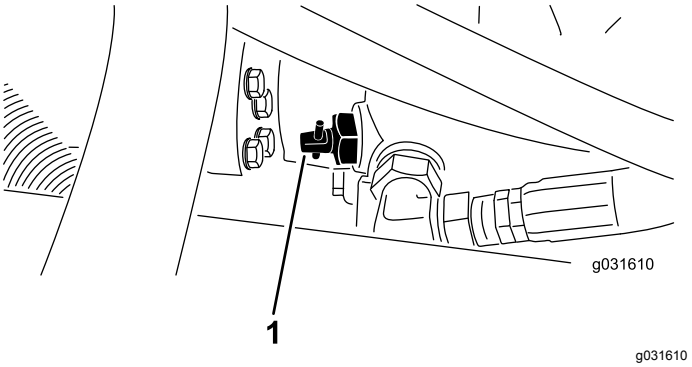

Figure 24

1. Bypass valve

2. Push or tow the machine.
3. Finish pushing or towing the machine and close the bypass valve by rotating it 90° (1/4 turn).

   Important: **Ensure that the bypass valve is closed before you start the engine. Running the engine with an open bypass valve causes the transmission to overheat.**

Maintenance

Note: Determine the left and right sides of the machine from the normal operating position.

Note: Download a free copy of the electrical or hydraulic schematic by visiting www.Toro.com and searching for your machine from the Manuals link on the home page.

Maintenance Safety

- Before you leave the operator's position, do the following:
  - Park the machine on a level surface.
  - Disengage the power takeoff and lower the attachments.
  - Engage the parking brake.
  - Shut off the engine and remove the key (if equipped).
  - Wait for all movement to stop.
- Allow machine components to cool before performing maintenance.
- If the cutting units are in the transport position, use the positive mechanical lock (if equipped) before you leave the machine unattended.
- If possible, do not perform maintenance while the engine is running. Keep away from moving parts.
- Support the machine with jack stands whenever you work under the machine.
- Carefully release pressure from components with stored energy.
- Keep all parts of the machine in good working condition and all hardware tightened, especially blade-attachment hardware.
- Replace all worn or damaged decals.
- To ensure safe, optimal performance of the machine, use only genuine Toro replacement parts. Replacement parts made by other manufacturers could be dangerous, and such use could void the product warranty.

Recommended Maintenance Schedule(s)

Maintenance Service Interval	Maintenance Procedure
After the first hour	• Torque the wheel-lug nuts.
After the first 10 hours	• Torque the wheel-lug nuts. • Check the condition and tension of all belts.
After the first 50 hours	• Change the oil and oil filter.
Before each use or daily	• Check the safety-interlock system. • Check the engine-oil level. • Check the tire pressure. • Check the engine-coolant level. • Clean debris off the radiator and oil cooler (clean them more frequently in dirty conditions). • Check the hydraulic-fluid level. • Check the hydraulic lines and hoses for leaks, kinked lines, loose mounting supports, wear, loose fittings, weather deterioration, and chemical deterioration. • Check the blade stopping time. • Clean the machine. • Clean and maintain the seatbelt.
Every 25 hours	• Check the electrolyte level. (If the machine is in storage, check it every 30 days.)
Every 50 hours	• Lubricate all of the bearings and bushings.
Every 100 hours	• Check the condition and tension of all belts.
Every 200 hours	• Service the Air Cleaner (More frequently in extreme dusty or dirty conditions) • Change the oil and oil filter. • Torque the wheel-lug nuts. • Check the parking-brake adjustment.
Every 400 hours	• Replace the spark plugs. • Replace the fuel-pump filter. • Inspect the fuel lines and connections.

Maintenance Service Interval	Maintenance Procedure
Every 500 hours	• Grease the bearings in the rear axle.
Every 800 hours	• If you are not using the recommended hydraulic fluid or have ever filled the reservoir with an alternative fluid, change the hydraulic fluid. • If you are not using the recommended hydraulic fluid or have ever filled the reservoir with an alternative fluid, replace the hydraulic filter (sooner if the service interval indicator is in the red zone).
Every 1,000 hours	• If you are using the recommended hydraulic fluid, replace the hydraulic filter (sooner if the service interval indicator is in the red zone).
Every 2,000 hours	• If you are using the recommended hydraulic fluid, change the hydraulic fluid.
Every 2 years	• Drain and clean the fuel tank. • Drain and flush the hydraulic tank. • Replace moving hoses.

Daily Maintenance Checklist

Duplicate this page for routine use.

Maintenance Check Item	For the week of:						
	Monday	Tuesday	Wednesday	Thursday	Friday	Saturday	Sunday
Check the safety-interlock operation.							
Check the brake operation.							
Check the engine-oil level.							
Check the cooling-system-fluid level.							
Check the air filter, dust cup, and burp valve.							
Check for unusual engine noises.							
Check the radiator and screen for debris							
Check for unusual operating noises.							
Check the hydraulic-system-oil level.							
Check the hydraulic hoses for damage.							
Check for fluid leaks.							
Check the fuel level.							
Check the tire pressure.							
Check the instrument operation.							
Check the height-of-cut adjustment.							
Lubricate all the grease fittings.[1]							
Wash the machine.							
Touch up any damaged paint.							
[1]Immediately **after every** washing, regardless of the interval listed.							

Important: **Refer to your engine owner's manual for additional maintenance procedures.**

Notation for Areas of Concern

Inspection performed by:		
Item	**Date**	**Information**

Pre-Maintenance Procedures

Removing the Hood

1. Unlatch and raise the hood.
2. Remove the hairpin cotter securing the hood pivot to the mounting brackets (Figure 25).

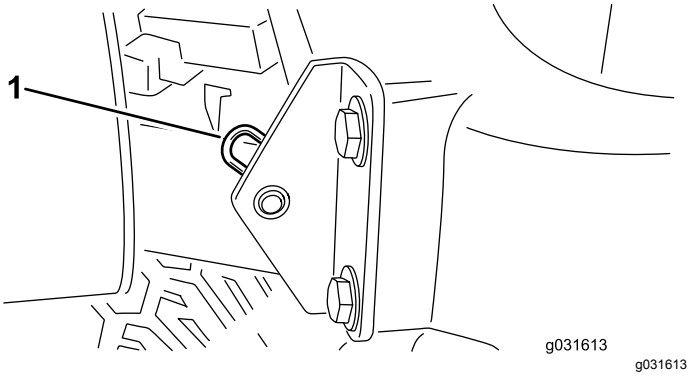

Figure 25

1. Hairpin cotter

3. Slide the hood to the right side, lift the other side, and pull it out of the brackets.

Note: Reverse this procedure to install the hood.

Using the Cutting Unit Service Latch

When servicing the cutting units, use the service latch to prevent injury.

1. Center the cutting unit sidewinder with the traction unit.
2. Raise the cutting unit to the transport position.
3. Engage the parking brake and shut off the machine.
4. Release the latch rod from the front carrier-frame retainer (Figure 26).

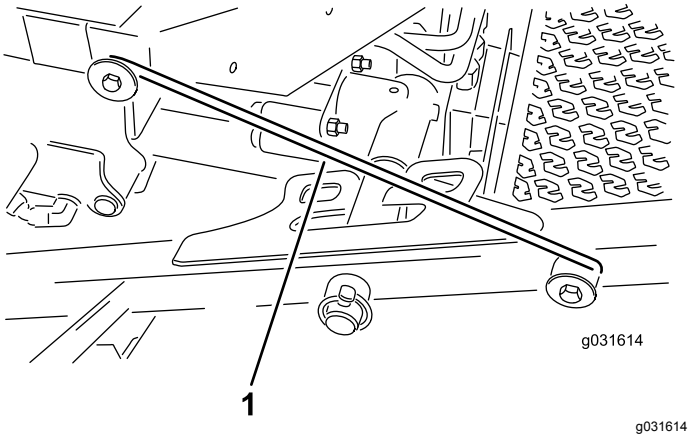

Figure 26

1. Service-latch hook

5. Lift the outside of the front cutting units and place the latch over the frame pin mounted on the front of the operator's platform (Figure 26).
6. Sit on the operator’s seat and start the machine.
7. Lower the cutting units to the mow position.
8. Turn off the machine and remove the key.
9. Reverse this procedure to unlatch the cutting units.

Lubrication

Greasing the Bearings and Bushings

Service Interval: Every 50 hours—Lubricate all of the bearings and bushings.

Every 500 hours/Yearly (whichever comes first)

The machine has grease fittings that you must lubricate regularly with No. 2 lithium grease. Also, lubricate the machine immediately after every washing.

The grease fitting locations and quantities are as follows:

- Rear cutting-unit pivot (Figure 27)

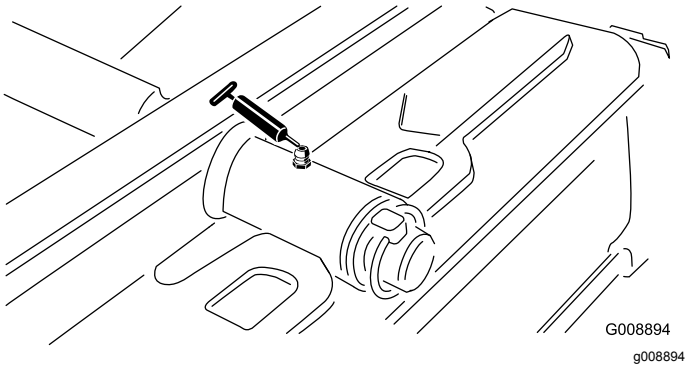

Figure 27

- Front cutting-unit pivot (Figure 28)

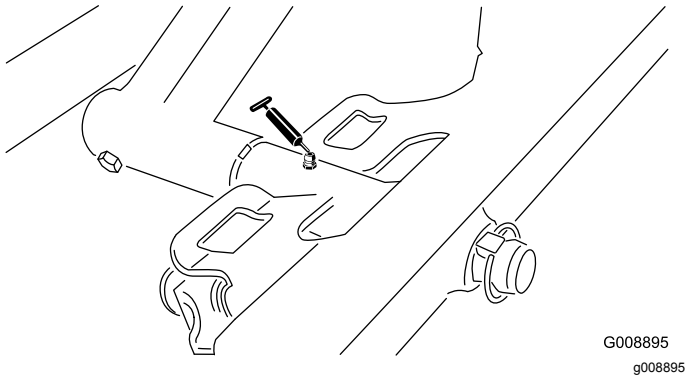

Figure 28

- 2 sidewinder-cylinder ends (Figure 29)

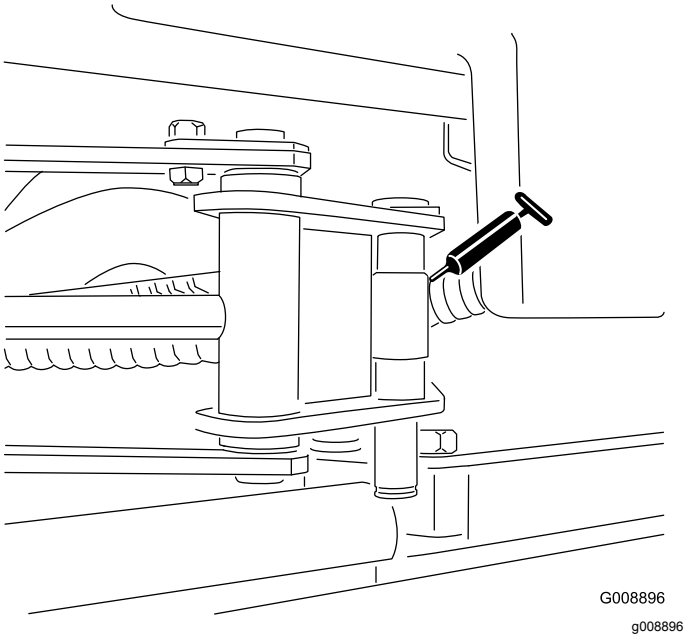

Figure 29

- Steering pivot (Figure 30)

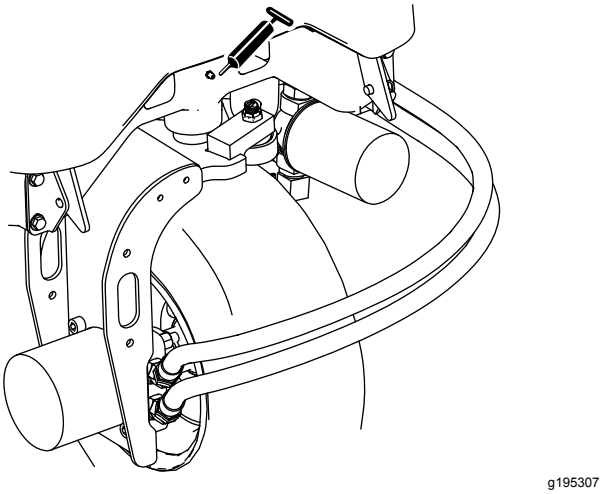

Figure 30

- 2 rear lift-arm pivots and lift cylinder (Figure 31)

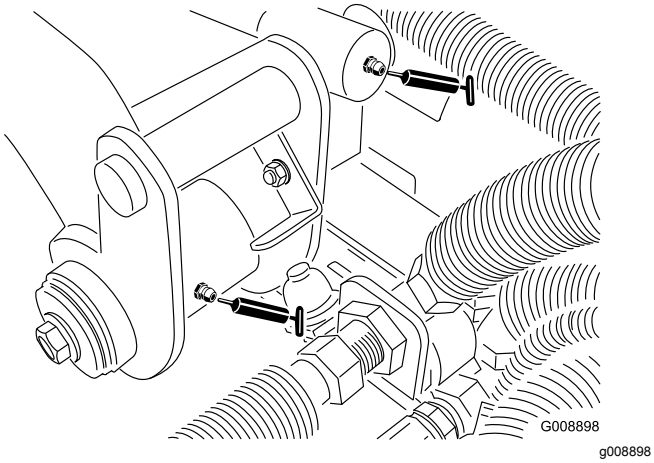

Figure 31

- 2 left, front lift-arm pivots and lift cylinder (Figure 32)

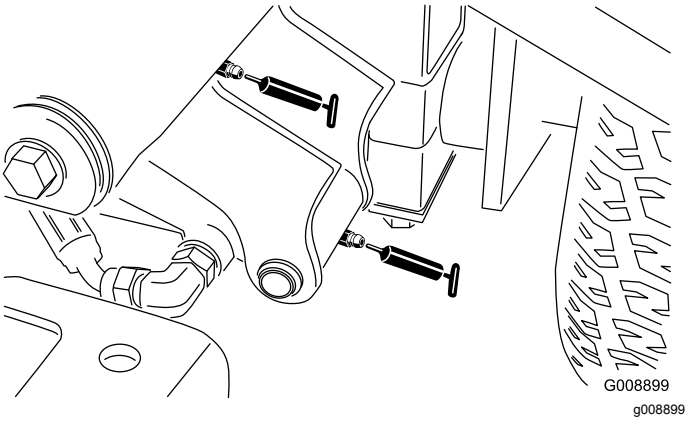

Figure 32

- 2 right, front lift-arm pivots and lift cylinder (Figure 33)

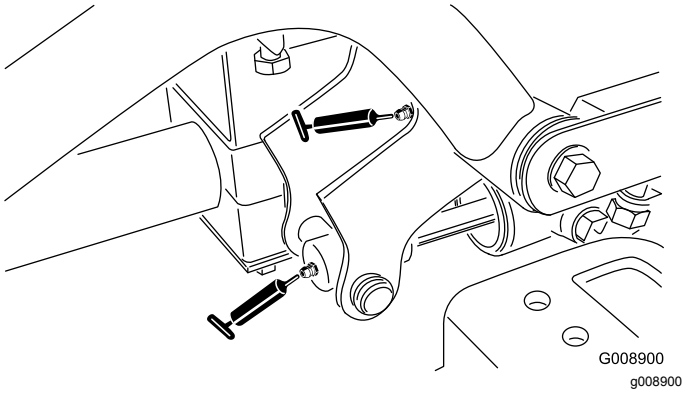

Figure 33

- Neutral-adjustment mechanism (Figure 34)

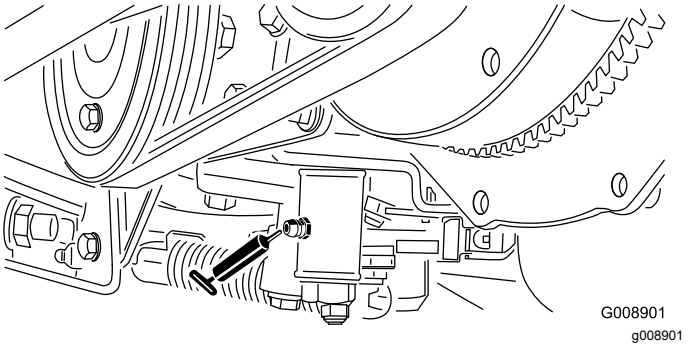

Figure 34

- Mow/transport slide (Figure 35)

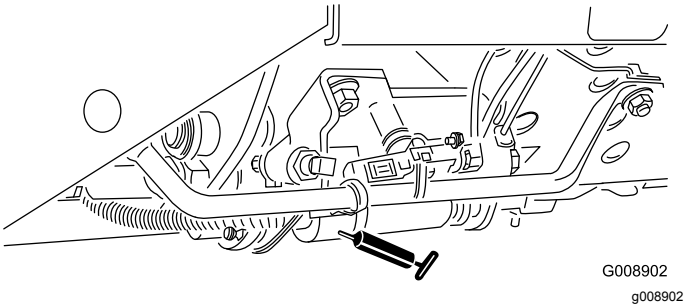

Figure 35

- Belt-tension pivot (Figure 36)

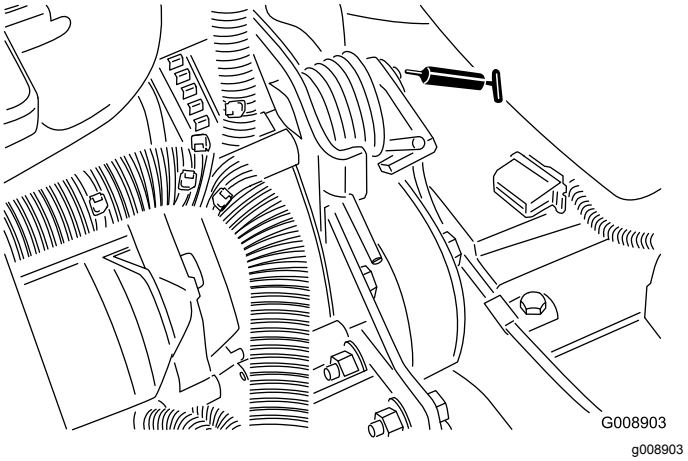

Figure 36

- Steering cylinder (Figure 37)

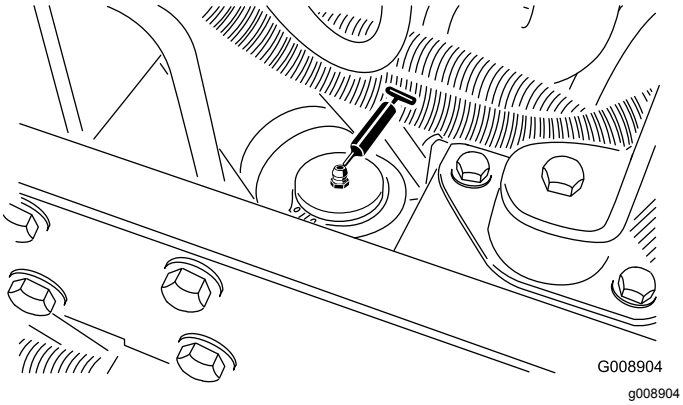

Figure 37

- 2 (per cutting unit) cutting unit spindle-shaft bearings (Figure 38)

  Note: You can use either fitting, whichever is more accessible. Pump grease into the fitting until a small amount appears at the bottom of the spindle housing (under the cutting unit).

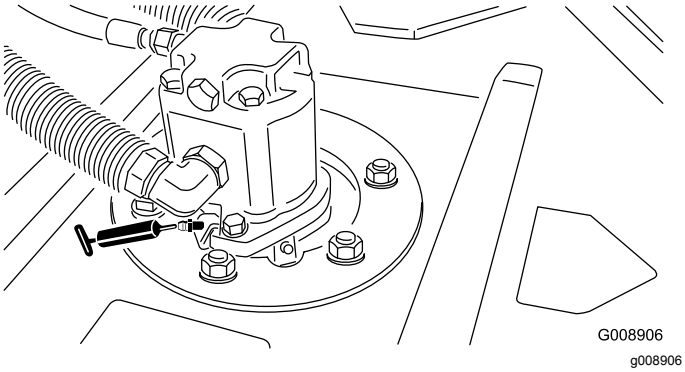

Figure 38

- 2 (per cutting unit) rear roller bearings (Figure 39)

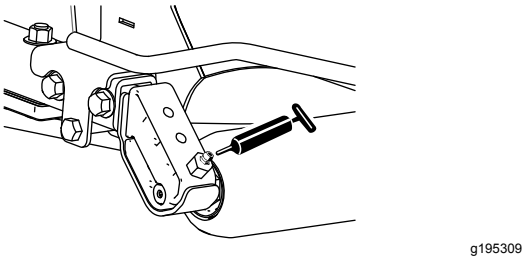

Figure 39

Note: Ensure that the grease groove in each roller mount aligns with the grease hole in each end of the roller shaft. To help align the groove and hole, there is also an alignment mark on an end of the roller shaft.

Important: **Do not lubricate the Sidewinder cross tube. The bearing blocks are self-lubricated.**

Engine Maintenance

Engine Safety

- Shut off the engine and remove the key before checking the oil or adding oil to the crankcase.
- Do not change the governor speed or overspeed the engine.

Servicing the Air Cleaner

Service Interval: Every 200 hours (More frequently in extreme dusty or dirty conditions)

Inspect the air cleaner and hoses periodically to maintain maximum engine protection and to ensure maximum service life. Check the air-cleaner body for damage, which could cause an air leak. Replace a damaged air-cleaner body.

Inspect and change the air-cleaner filter as described in the following procedure:

1. Pull the latch outward and rotate the air-cleaner cover counterclockwise.

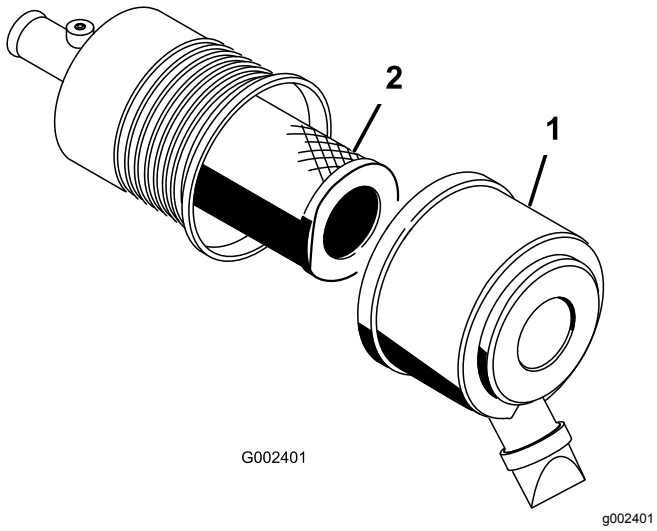

Figure 40

1. Air-cleaner cover
2. Filter

2. Before removing the filter, use low-pressure air (40 psi, clean and dry) to help remove large accumulations of debris packed between the outside of the primary filter and the canister.

   Important: **Avoid using high-pressure air which could force dirt through the filter into the intake tract. This cleaning process prevents debris from migrating into the intake when you remove the primary filter.**

3. Remove and replace the primary filter.

   Note: Cleaning of the used element is not recommended due to the possibility of damage to the filter media.

4. Inspect the new filter for shipping damage, checking the sealing end of the filter and the body.

   Important: **Do not use a damaged filter.**

5. Insert the new filter by applying pressure to the outer rim of the element to seat it in the canister.
6. Clean the dirt ejection port located in the removable cover. Remove the rubber outlet valve from the cover, clean the cavity, and replace the outlet valve.
7. Install the cover orienting the rubber, outlet valve in a downward position, between approximately 5 o'clock to 7 o'clock when viewed from the end (Figure 40).
8. Secure the cover latches.

Checking the Engine-Oil Level

Service Interval: Before each use or daily

The engine is shipped with oil in the crankcase; however, the oil level must be checked before and after the engine is first started.

Crankcase capacity is approximately 3.3 L (3.5 US qt) with the filter.

Note: Toro Premium Engine oil is available from your distributor in either 15W-40 or 10W-30 viscosity. See the parts catalog for part numbers.

Note: The best time to check the engine oil is when the engine is cool before it has been started for the day. If it has already been run, allow the oil to drain back down to the sump for at least 10 minutes before checking. If the oil level is at or below the Add mark on the dipstick, add oil to bring the oil level to the Full mark. **Do not overfill.** If the oil level is between the Full and Add marks, additional oil is not required.

The engine uses any high-quality 10W-30 detergent oil having the American Petroleum Institute (API) service classification SJ, SK, SL, SM, or higher. Choose a viscosity according to the table in Figure 41.

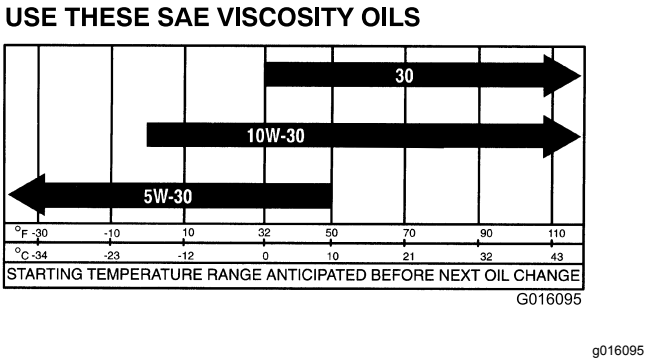

Figure 41

1. Position the machine on a level surface and open the hood.
2. Remove the dipstick (Figure 42) and wipe it with a clean rag. Insert the dipstick into the tube and make sure that it is seated fully. Remove the dipstick and check the level-of-the-oil.

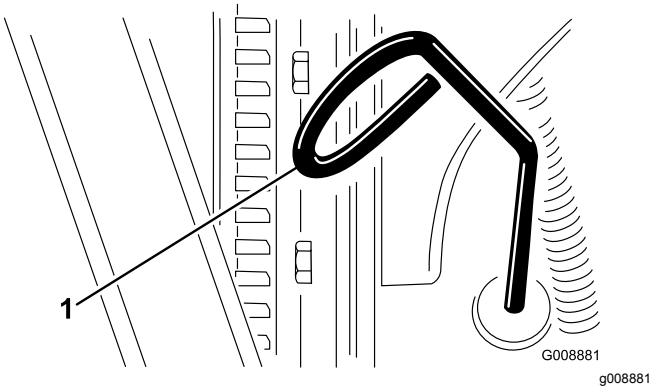

Figure 42

1. Dipstick
2. Filler cap

3. If the oil level is low, remove the filler cap (Figure 43) and add enough oil to raise the level-of-the-oil to the Full mark on the dipstick.

   Note: When adding oil, remove the dipstick to allow proper venting. Pour oil slowly and check the level-of-the-oil often during this process. Do not overfill.

   Important: **When adding engine oil or filling oil, there must be clearance between the oil fill device and the oil fill hole in the valve cover as shown in Figure 43. This clearance is necessary to permit venting when filling, which prevents oil from overrunning into the breather.**

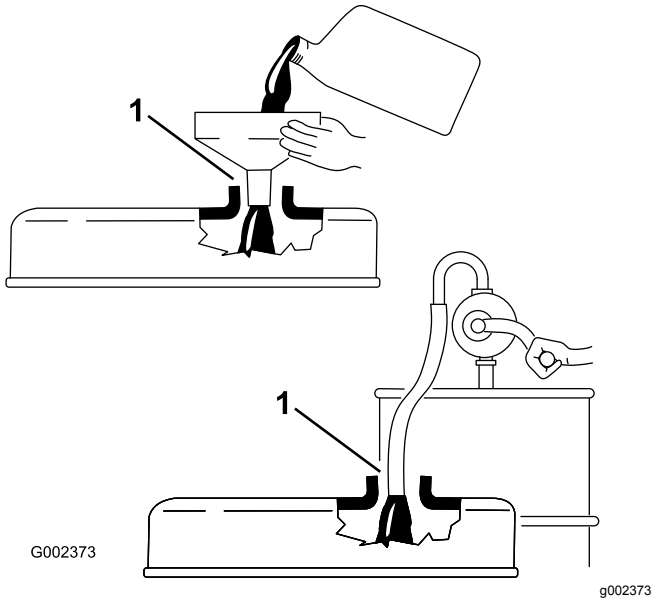

Figure 43

1. Note clearance

4. Install the dipstick firmly in place.
5. Install the oil-fill cap and close the hood.

Changing the Engine Oil and Filter

Service Interval: After the first 50 hours
Every 200 hours

1. Remove the drain plug (Figure 44) and let oil flow into a drain pan. When the oil stops flowing, install the drain plug.

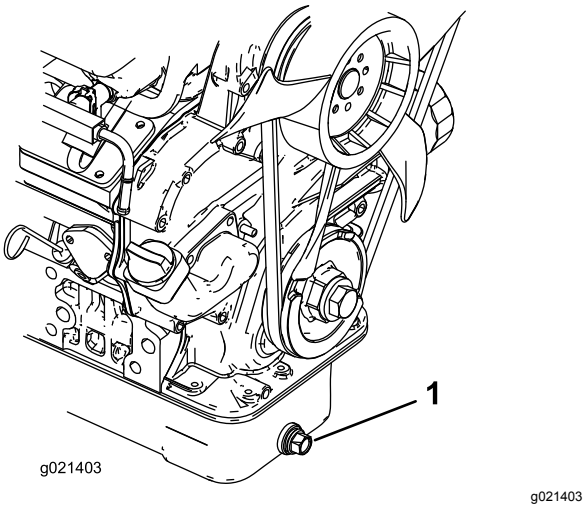

Figure 44

1. Engine oil drain plug

2. Remove the oil filter (Figure 45). Apply a light coat of clean oil to the new filter seal before installing the filter. **Do not overtighten.**

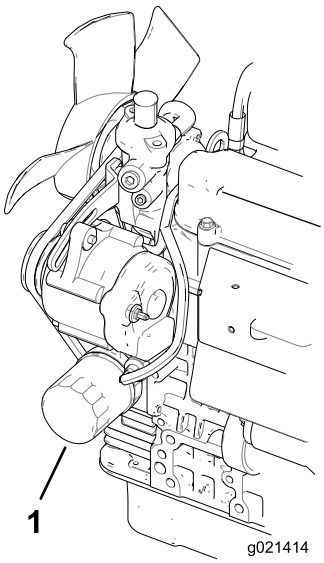

g021414

Figure 45

1. Engine oil filter

3. Add oil to the crankcase; refer to Checking the Engine-Oil Level (page 37).

Replacing the Spark Plugs

Service Interval: Every 400 hours

Replace the spark plugs to ensure proper engine performance and reduce exhaust emission level.

Use a Champion RC 14YC or NGK BPR 4ES.

1. Clean the area around the spark plugs so foreign matter cannot fall into the cylinder when you remove the spark plug.
2. Pull the wires off the spark plugs and remove the plugs from the cylinder head.
3. Check the condition of the side electrode, center electrode, and center-electrode insulator to ensure that there is no damage.

   Important: **A cracked, fouled, dirty, or otherwise malfunctioning spark plug must be replaced. Do not sand blast, scrape, or clean electrodes by using a wire brush because grit may eventually release from the plug and fall into the cylinder. The result is usually a damaged engine.**

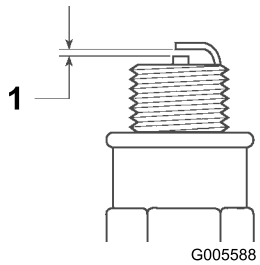

g005588

Figure 46

1. Air gap at 0.81 mm (0.032 inch)

4. Set the air gap on each plug between the center and side electrodes to 0.81 mm (0.032 inch).
5. Install the correctly-gapped spark plugs and tighten them to 24.5 to 29 N-m (18 to 22 ft-lb). If you cannot use a torque wrench, tighten the plugs firmly.
6. Install the spark-plug wires.

Fuel System Maintenance

Replacing the Fuel-Pump Filter

Service Interval: Every 400 hours

⚠ DANGER

In certain conditions, fuel is extremely flammable and highly explosive. A fire or explosion from fuel can burn you and others and can damage property

- **Drain fuel from the fuel tank when the engine is cold. Do this outdoors, in an open area. Wipe up any fuel that spills.**
- **Never smoke when draining fuel, and stay away from an open flame or where a spark may ignite the fuel fumes.**

1. Remove the seat from the traction unit to access the fuel pump (Figure 47).

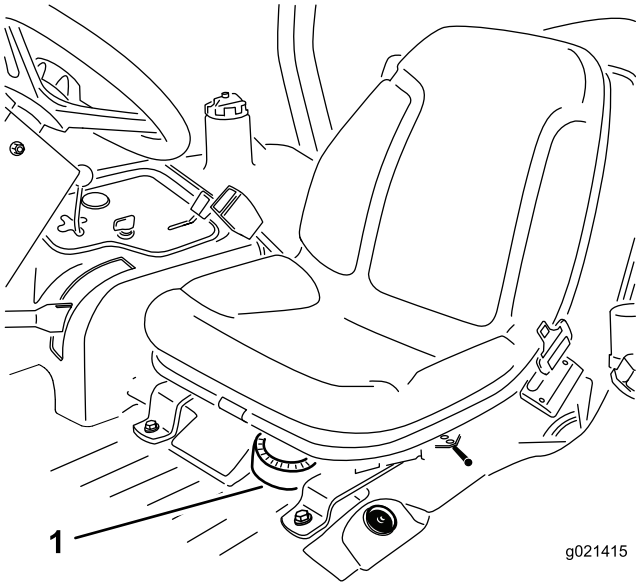

g021415

Figure 47

1. Fuel pump

2. Unplug the wiring-harness connectors from the fuel pump (Figure 48).
3. Remove the fuel pump assembly and the fuel filter from the tank (Figure 48).
4. Remove the clamp that secures the fuel-filter hose to the fuel-pump fitting. Remove the hose from the fitting (Figure 48).

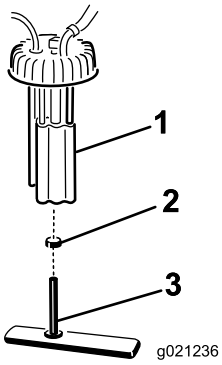

g021236

Figure 48

1. Fuel pump
2. Hose clamp
3. Fuel line/fuel filter

5. Insert the new hose clamp onto the new fuel-filter hose.
6. Insert the hose onto the fuel pump and secure the clamp.
7. Insert the assembly into the fuel tank and tighten the cap to 20 to 22 N-m (175 to 200 in-lb).
8. Connect the wires and secure the hose with the hose clamp.
9. Install the seat.

Servicing the Fuel Tank

Service Interval: Every 2 years—Drain and clean the fuel tank.

Drain and clean the tank if the fuel system becomes contaminated or if the machine will be stored for an extended period of time. Use clean fuel to flush out the tank.

Inspecting the Fuel Lines and Connections

Service Interval: Every 400 hours/Yearly (whichever comes first)

Inspect the fuel lines for deterioration, damage, or loose connections.

Electrical System Maintenance

Electrical System Safety

- Disconnect the battery before repairing the machine. Disconnect the negative terminal first and the positive last. Connect the positive terminal first and the negative last.
- Charge the battery in an open, well-ventilated area, away from sparks and flames. Unplug the charger before connecting or disconnecting the battery. Wear protective clothing and use insulated tools.

Servicing the Battery

Service Interval: Every 25 hours—Check the electrolyte level. (If the machine is in storage, check it every 30 days.)

Maintain the battery-electrolyte level properly and keep the top of the battery. If you store the machine in a hot location, the battery will discharge more rapidly than if you store the machine in a cool location.

Maintain the cell level with distilled or demineralized water. Do not fill the cells above the bottom of the split ring inside each cell. Install the filler caps with the vents pointing to the rear (toward the fuel tank).

⚠ DANGER

Battery electrolyte contains sulfuric acid which is fatal if consumed and causes severe burns.

- **Do not drink electrolyte and avoid contact with skin, eyes, or clothing. Wear safety glasses to shield your eyes and rubber gloves to protect your hands.**
- **Fill the battery where clean water is always available for flushing the skin.**

Keep the top of the battery clean by washing it periodically with a brush dipped in ammonia or a solution of bicarbonate of soda. Flush the top surface with water after cleaning. Do not remove the filler caps while cleaning the battery.

The battery cables must be tight on the terminals to provide good electrical contact.

⚠ WARNING

Incorrectly routing the battery cable could damage the tractor and cables, causing sparks. Sparks can cause the battery gases to explode, resulting in personal injury.

- **Always *disconnect* the negative (black) battery cable before disconnecting the positive (red) cable.**
- **Always *connect* the positive (red) battery cable before connecting the negative (black) cable.**

If the terminals have corrosion, disconnect the cables (the negative (–) cable first) and scrape the clamps and terminals separately. Connect the cables (positive (+) cable first) and coat the terminals with petroleum jelly.

Servicing the Fuses

The fuses in machines electrical system are located under console cover.

If the machine stops or has other electrical system issues, check the fuses. Grasp each fuse in turn and remove them 1 at a time, checking if any are blown.

Important: **If you need to replace a fuse, always use the same type and amperage-rated fuse as the one you are replacing; otherwise, you could damage the electrical system. Refer to the decal next to the fuses for a diagram of each fuse and its amperage.**

Note: If a fuse blows frequently, you probably have a short in the electrical system and should have it serviced by a qualified service technician.

Drive System Maintenance

Checking the Tire Pressure

Service Interval: Before each use or daily

⚠ DANGER

Low tire pressure decreases machine side-hill stability. This could cause a rollover, which may result in personal injury or death.

Do not underinflate the tires.

The correct air pressure in the tires is 97 to 124 kPa (14 to 18 psi) as shown in Figure 49.

Important: **Maintain pressure in all tires to ensure a good quality of cut and proper machine performance.**

Check the air pressure in all the tires before operating the machine.

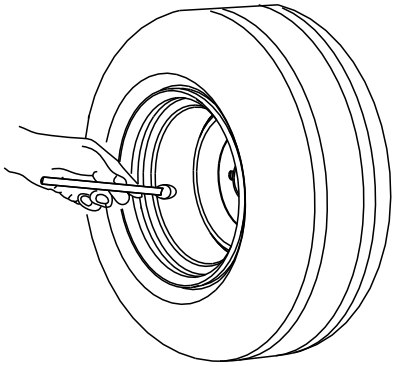

Figure 49

Checking the Torque of the Wheel-Lug Nuts

Service Interval: After the first hour

After the first 10 hours

Every 200 hours

Torque the wheel-lug nuts to 61 to 88 N·m (45 to 65 ft-lb).

⚠ WARNING

Failing to maintain proper torque of the wheel-lug nuts could result in personal injury.

Torque the wheel-lug nuts to the proper torque value.

Adjusting the Traction Drive for Neutral

If the machine moves when the traction pedal is in the NEUTRAL position, adjust the traction cam.

1. Park the machine on a level surface, lower the cutting units, engage the parking brake, shut off the engine, and remove the key from the ignition switch.
2. Raise a front wheel and a rear wheel off the floor and place support blocks under the frame.

⚠ WARNING

If the machine is not supported adequately, it may accidentally fall, injuring anyone under the machine.

A front wheel *and* a rear wheel must be raised off the ground; otherwise, the machine will move during adjustment.

3. Loosen the locknut on the traction adjustment cam (Figure 50).

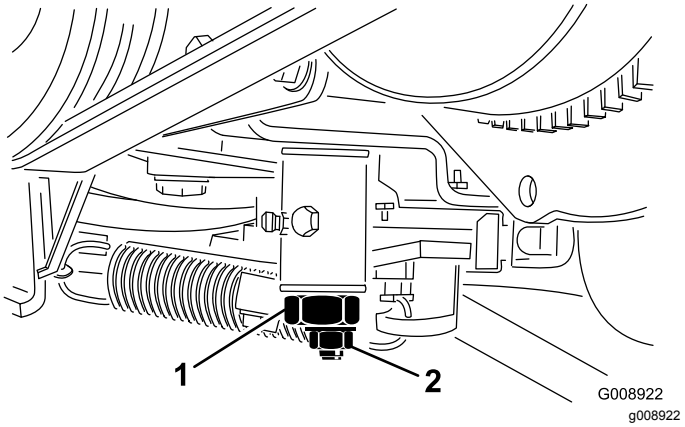

Figure 50

1. Traction adjustment cam 2. Locknut

⚠ WARNING

The engine must be running so that you can make a final adjustment of the traction adjustment cam. Contact with hot or moving parts can result in personal injury.

Keep your hands, feet, face, and other body parts away from the muffler, other hot parts of the engine, and rotating parts.

4. Start the engine and rotate the cam hex in both directions to determine the mid position of the neutral span.

5. Tighten the locknut securing the adjustment.
6. Shut off the engine.
7. Remove the support blocks and lower the machine to the shop floor. Test drive the machine to ensure that it does not move when the traction pedal is in neutral.

Cooling System Maintenance

Cooling System Safety

- Swallowing engine coolant can cause poisoning; keep out of reach from children and pets.
- Discharge of hot, pressurized coolant or touching a hot radiator and surrounding parts can cause severe burns.
  - Always allow the engine to cool at least 15 minutes before removing the radiator cap.
  - Use a rag when opening the radiator cap, and open the cap slowly to allow steam to escape.
- Do not operate the machine without the covers in place.
- Keep your fingers, hands and clothing clear of rotating fan and drive belt.

Checking the Cooling System

Service Interval: Before each use or daily

Clean any debris off of the radiator (Figure 51).

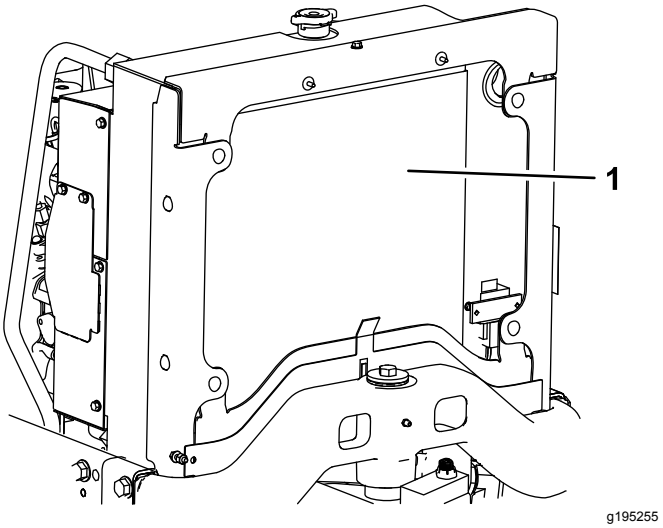

Figure 51

1. Radiator

Clean the radiator hourly if conditions are extremely dusty and dirty; refer to Cleaning the Cooling System (page 44).

The cooling system is filled with a 50/50 solution of water and permanent ethylene glycol anti-freeze. Check the coolant level at the beginning of each day before starting the engine.

The capacity of the cooling system is approximately 5.7 L (6 US qt).

⚠ CAUTION

If the engine has been running, the pressurized, hot coolant can escape and cause burns.

- **Do not open the radiator cap when the engine is running.**
- **Use a rag when opening the radiator cap, and open the cap slowly to allow steam to escape.**

1. Check the coolant level in the expansion tank (Figure 52).

   Note: With a cold engine, the coolant level should be approximately midway between the marks on the side of the tank.

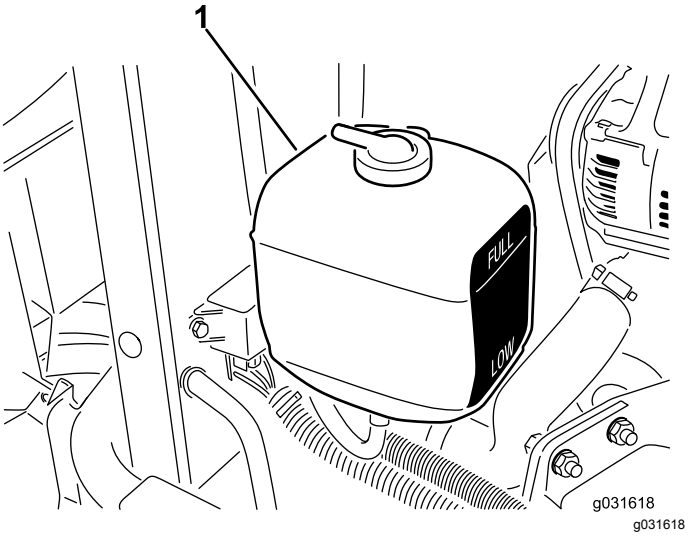

Figure 52

1. Expansion tank

2. If the coolant level is low, remove the expansion-tank cap and replenish the system.

   Note: Do not overfill.

3. Install the expansion-tank cap.

Cleaning the Cooling System

Service Interval: Before each use or daily

1. Raise the hood.
2. Clean the engine area thoroughly of all debris.
3. With compressed air, start from the front of the radiator and blow the debris out toward the back.
4. Clean the radiator from the back side and blow toward the front.

   Note: Repeat the procedure several times until you remove all chaff and debris.

   Important: **Cleaning the radiator with water promotes premature corrosion damage to components and compacts debris.**

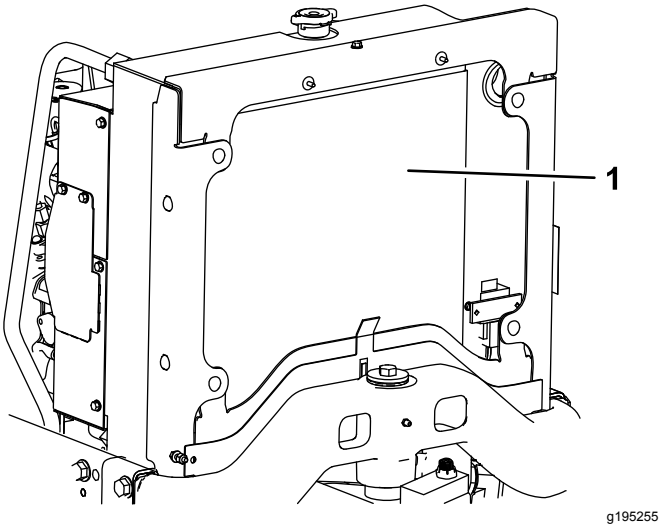

Figure 53

1. Radiator

5. Close and latch the hood.

Brake Maintenance

Adjusting the Parking Brake

Service Interval: Every 200 hours—Check the parking-brake adjustment.

1. Loosen the set screw securing the knob to the parking-brake lever (Figure 54).

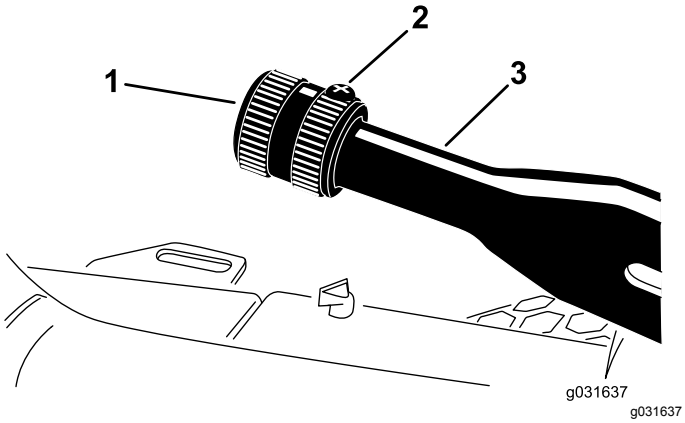

Figure 54

1. Knob
2. Set screw
3. Parking-brake lever

2. Torque the knob to 41 to 68 N·m (30 to 40 in-lb) to actuate the lever.
3. Tighten the set screw.

Belt Maintenance

Servicing the Engine Belts

Service Interval: After the first 10 hours—Check the condition and tension of all belts.

Every 100 hours—Check the condition and tension of all belts.

Checking the Alternator-Belt Tension

1. Open the hood.
2. Apply 30 N (22 in-lb) of force to the alternator belt, midway between the pulleys (Figure 55).

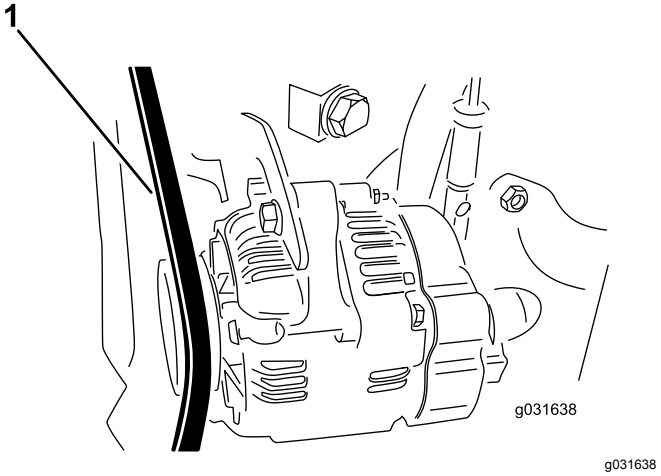

Figure 55

1. Alternator belt

3. If the belt does not deflect 11 mm (7/16 inch), complete the following procedure to tension the belt:
   A. Loosen the bolt securing the brace to the engine and the bolt securing the alternator to the brace.
   B. Insert a pry bar between the alternator and engine, and pry out at the alternator.
   C. When you obtain the proper tension, tighten the alternator and brace bolts to secure the adjustment.

Replacing the Hydrostat-Drive Belt

1. Insert a nut driver or small piece of tubing onto the end of the belt-tensioning spring.

⚠ CAUTION

The spring that tensions the belt is under a heavy load, and releasing the tension of the spring improperly may cause injury.

Use care when de-tensioning the spring and replacing the belt.

2. Push down and forward on the spring end to unhook it from the bracket and release tension on the spring (Figure 56).

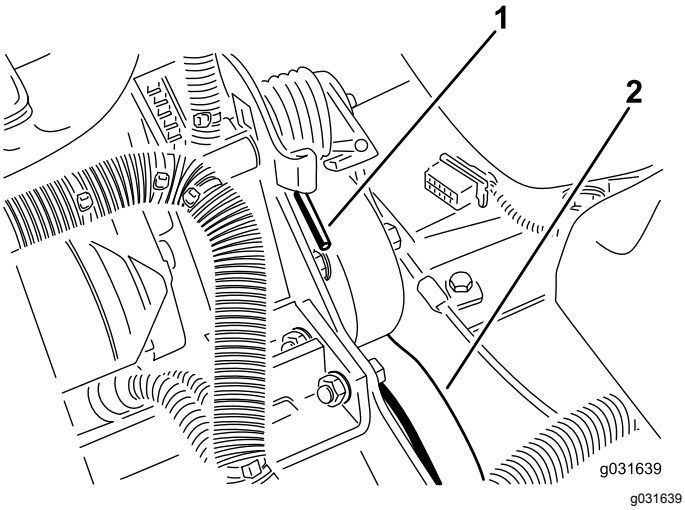

Figure 56

1. Spring end
2. Hydrostat-drive belt

3. Replace the belt.
4. Reverse this procedure to tension the spring.

Controls System Maintenance

Adjusting the Throttle

1. Position the throttle lever rearward so that it stops against the control-panel slot.
2. Loosen the throttle-cable connector on the injection-pump-lever arm (Figure 57).

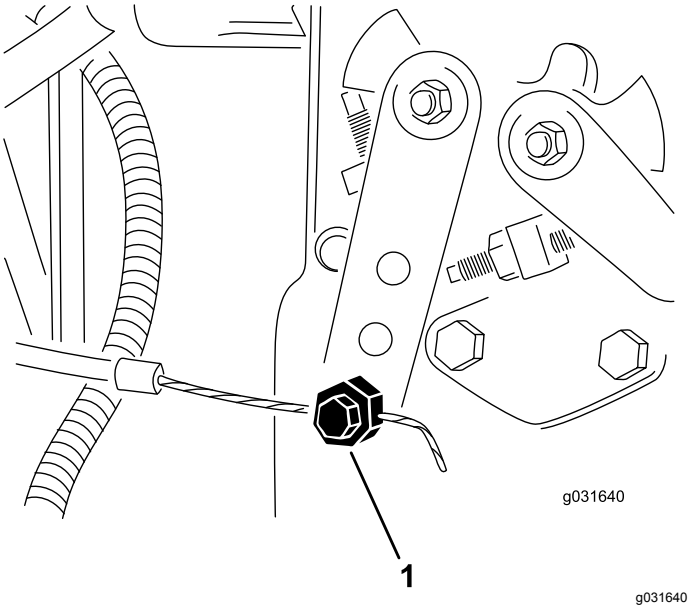

Figure 57

1. Injection-pump-lever arm

3. Hold the injection-pump-lever arm against the low-idle stop and tighten the cable connector.
4. Loosen the screws securing the throttle control to the control panel.
5. Push the throttle-control lever completely forward.
6. Slide the stop plate until it contacts the throttle lever and tighten the screws securing the throttle control to the control panel.
7. If the throttle does not stay in position during operation, torque the locknut, used to set the friction device on the throttle lever, to 5 to 6 N·m (40 to 55 in-lb).

   Note: The maximum force required to operate the throttle lever should be 27 N·m (20 in-lb).

Hydraulic System Maintenance

Hydraulic System Safety

- Seek immediate medical attention if fluid is injected into skin. Injected fluid must be surgically removed within a few hours by a doctor.
- Ensure that all hydraulic-fluid hoses and lines are in good condition and all hydraulic connections and fittings are tight before applying pressure to the hydraulic system.
- Keep your body and hands away from pinhole leaks or nozzles that eject high-pressure hydraulic fluid.
- Use cardboard or paper to find hydraulic leaks.
- Safely relieve all pressure in the hydraulic system before performing any work on the hydraulic system.

Servicing the Hydraulic Fluid

Hydraulic Fluid Specifications

The reservoir is filled at the factory with high-quality hydraulic fluid. Check the level of the hydraulic fluid before you first start the engine and daily thereafter; refer to Checking the Hydraulic Fluid Level (page 48).

Recommended hydraulic fluid: Toro PX Extended Life Hydraulic Fluid; available in 19 L (5 US gallon) pails or 208 L (55 US gallon) drums.

Note: A machine using the recommended replacement fluid requires less frequent fluid and filter changes.

Alternative hydraulic fluids: If Toro PX Extended Life Hydraulic Fluid is not available, you may use another conventional, petroleum-based hydraulic fluid having specifications that fall within the listed range for all the following material properties and that it meets industry standards. Do not use synthetic fluid. Consult with your lubricant distributor to identify a satisfactory product.

Note: Toro does not assume responsibility for damage caused by improper substitutions, so use products only from reputable manufacturers who will stand behind their recommendation.

High Viscosity Index/Low Pour Point Anti-wear Hydraulic Fluid, ISO VG 46

Material Properties:

Viscosity, ASTM D445	cSt @ 40°C (104°F) 44 to 48
Viscosity Index ASTM D2270	140 or higher
Pour Point, ASTM D97	-37°C to -45°C (-34°F to -49°F)
Industry Specifications:	Eaton Vickers 694 (I-286-S, M-2950-S/35VQ25 or M-2952-S)

Note: Many hydraulic fluids are almost colorless, making it difficult to spot leaks. A red dye additive for the hydraulic fluid is available in 20 ml (0.67 fl oz) bottles. A bottle is sufficient for 15 to 22 L (4 to 6 US gallons) of hydraulic fluid. Order Part No. 44-2500 from your authorized Toro distributor.

Important: **Toro Premium Synthetic Biodegradable Hydraulic Fluid is the only synthetic biodegradable fluid approved by Toro. This fluid is compatible with the elastomers used in Toro hydraulic systems and is suitable for a wide-range of temperature conditions. This fluid is compatible with conventional mineral oils, but for**

maximum biodegradability and performance, the hydraulic system should be thoroughly flushed of conventional fluid. The oil is available in 19 L (5 US gallons) pails or 208 L (55 US gallons) drums from your authorized Toro distributor.

Checking the Hydraulic Fluid Level

Service Interval: Before each use or daily—Check the hydraulic-fluid level.

1. Perform the pre-maintenance procedure; refer to Maintenance Safety (page 30).
2. Clean the area around the filler neck and hydraulic-tank cap (Figure 58).

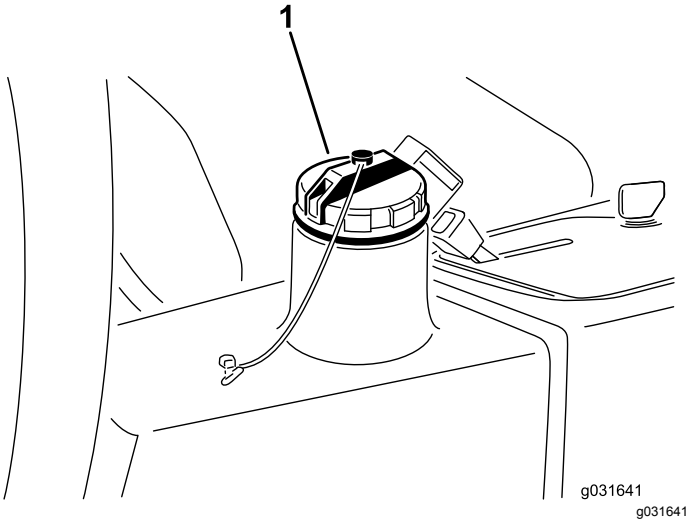

Figure 58

1. Hydraulic-tank cap

3. Remove the hydraulic-tank cap (Figure 58).
4. Remove the dipstick from the filler neck and wipe it with a clean rag.
5. Insert the dipstick into the filler neck, then remove it and check the fluid level.

   Note: The fluid level should be within 6 mm (1/4 inch) of the mark on the dipstick.
6. If the level is low, add the appropriate fluid to raise the level to the FULL mark.
7. Install the dipstick and cap onto the filler neck.

Changing the Hydraulic Fluid

Service Interval: Every 2,000 hours—**If you are using the recommended hydraulic fluid,** change the hydraulic fluid.

Every 800 hours—**If you are not using the recommended hydraulic fluid or have ever filled the reservoir with an alternative fluid,** change the hydraulic fluid.

Hydraulic Fluid Capacity: 13.2 L (3.5 US gallons)

If the fluid becomes contaminated, contact your local Toro distributor to flush the system. Contaminated fluid looks milky or black.

1. Turn the engine off and raise the hood.
2. Disconnect the hydraulic line or remove the hydraulic filter and let the hydraulic fluid flow into a drain pan (Figure 61 and Figure 59).

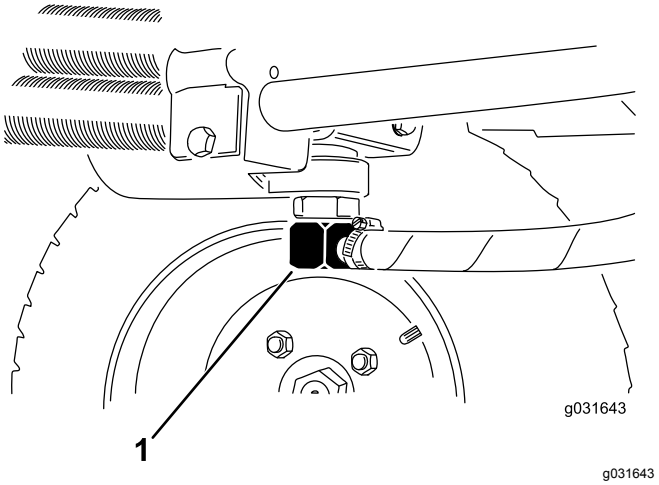

Figure 59

1. Hydraulic line

3. Install the hydraulic line when the hydraulic fluid stops draining (Figure 59).
4. Fill the reservoir (Figure 60) with approximately 13.2 L (3.5 US gallons) of hydraulic fluid; refer to Hydraulic Fluid Specifications (page 47) and Checking the Hydraulic Fluid Level (page 48).

   Important: **Use only the hydraulic fluids specified. Other fluids could damage the system.**

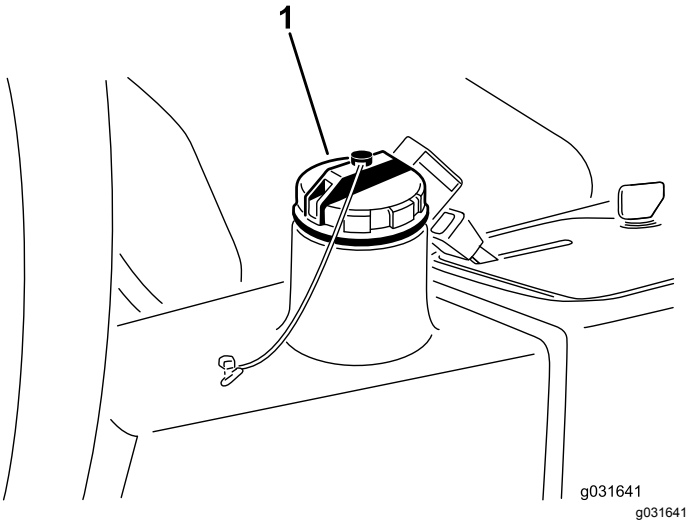

Figure 60

1. Hydraulic-tank cap

5. Install the reservoir cap.
6. Start the engine.
7. Use all the hydraulic controls to distribute the hydraulic fluid throughout the system, check for leaks, then shut off the engine.
8. Check the fluid level and add enough to raise the level to the FULL mark on the dipstick.

   Note: Do not overfill.

Changing the Hydraulic Filter

Service Interval: Every 1,000 hours—**If you are using the recommended hydraulic fluid,** replace the hydraulic filter (sooner if the service interval indicator is in the red zone).

Every 800 hours—**If you are not using the recommended hydraulic fluid or have ever filled the reservoir with an alternative fluid,** replace the hydraulic filter (sooner if the service interval indicator is in the red zone).

Use a genuine Toro replacement filter (Part No. 86-3010).

Important: **Using any other filter may void the warranty on some components.**

1. Perform the pre-maintenance procedure; refer to Maintenance Safety (page 30).
2. Pinch off the hose to the filter-mounting plate.
3. Clean around the filter-mounting area, place a drain pan under the filter, and remove the filter (Figure 61).

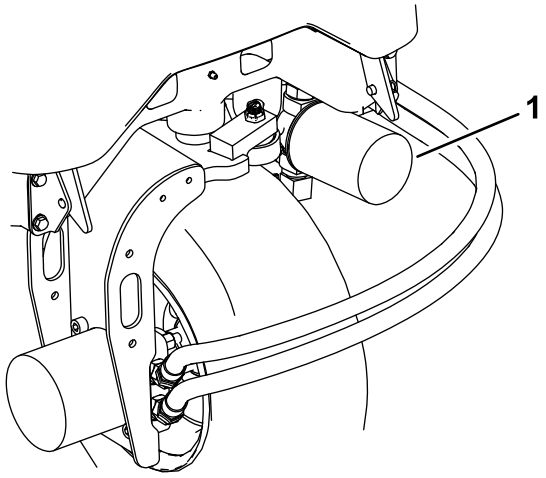

Figure 61

1. Hydraulic filter

4. Lubricate the new filter gasket and fill the filter with hydraulic fluid.
5. Ensure that the filter mounting area is clean and screw the filter on until the gasket contacts the mounting plate; then tighten the filter 1/2 turn.
6. Release the hose to the filter-mounting plate.
7. Start the engine and let it run for approximately 2 minutes to purge air from the system.
8. Shut off the engine and check for leaks.

Checking the Hydraulic Lines and Hoses

Service Interval: Before each use or daily

Every 2 years—Replace moving hoses.

Check the hydraulic lines and hoses for leaks, kinked lines, loose mounting supports, wear, loose fittings, weather deterioration, and chemical deterioration. Make all necessary repairs before operating the machine.

Cutting Unit Maintenance

Separating the Cutting Units from the Traction Unit

1. Perform the pre-maintenance procedure; refer to Maintenance Safety (page 30).
2. Remove the hydraulic-motor-mounting screws and disconnect and remove the hydraulic motor from the cutting unit (Figure 62).

   Important: **Cover the top of the spindle to prevent contamination.**

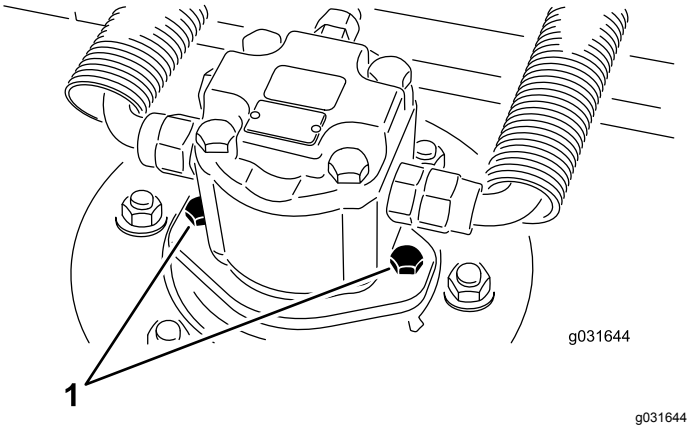

Figure 62

1. Motor-mounting screws

3. Remove the lynch pin or retaining nut securing the cutting unit carrier frame to the lift-arm-pivot pin (Figure 63).

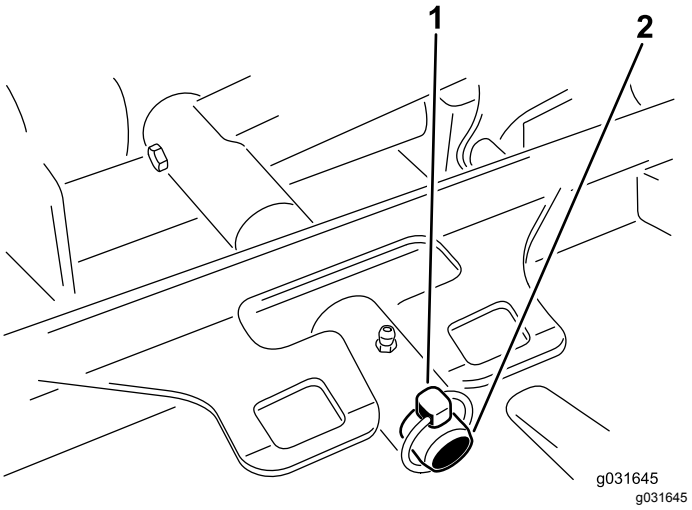

Figure 63

1. Lynch pin
2. Lift-arm-pivot pin

4. Roll the cutting unit away from the traction unit.

Mounting the Cutting Units to the Traction Unit

1. Perform the pre-maintenance procedure; refer to Maintenance Safety (page 30).
2. Move the cutting unit into position in front of the traction unit.
3. Slide the cutting unit carrier frame onto the lift-arm-pivot pin and secure it with the lynch pin or retaining nut (Figure 63).
4. Using the hydraulic-motor-mounting screws, install the hydraulic motor to the cutting unit (Figure 62).

   Note: Ensure that the O-ring is properly positioned and not damaged.
5. Grease the spindle.

Servicing the Blade Plane

The rotary cutting unit comes from the factory preset at 5 cm (2 inches) height-of-cut and blade rake of 7.9 mm (0.31 inch). The left and right heights of cut are also preset to within ± 0.7 mm (0.03 inch) of the other.

The cutting unit is designed to withstand blade impacts without deforming the chamber. If the blade strikes a solid object, inspect the blade for damage and the blade plane for accuracy.

Inspecting the Blade Plane

1. Remove the hydraulic motor from the cutting unit and remove the cutting unit from the traction unit.

   Note: Use a hoist (or a minimum of 2 people) and place the cutting unit on a flat table.

2. Mark an end of the blade with a paint pen or marker.

   Note: Use this end of the blade to check all heights.

3. Position the cutting edge of the marked end of the blade at the 12 o'clock position (straight ahead in the direction of mowing) and measure the height from the table to the cutting edge of the blade (Figure 64).

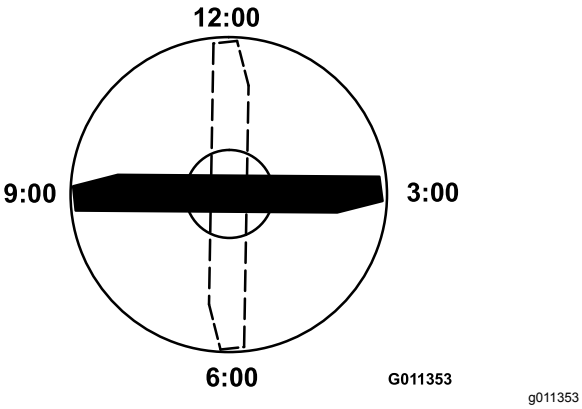

Figure 64

4. Rotate the marked end of the blade to the 3 o'clock and 9 o'clock positions and measure the heights (Figure 64).
5. Compare the 12 o'clock position measured height to the height-of-cut setting.

   Note: It should be within 0.7 mm (0.03 inch). The 3 o'clock and 9 o'clock heights should be 3.8 ± 2.2 mm (0.15 ± 0.09 inch) higher than the 12 o'clock setting and within 2.2 mm (0.09 inch) of each other.

If any of these measurements are not within specification, proceed to Adjusting the Blade Plane (page 51).

Adjusting the Blade Plane

Start with the front adjustment (change 1 bracket at a time).

1. Remove the height-of-cut bracket (front, left, or right) from the cutting unit frame (Figure 65).

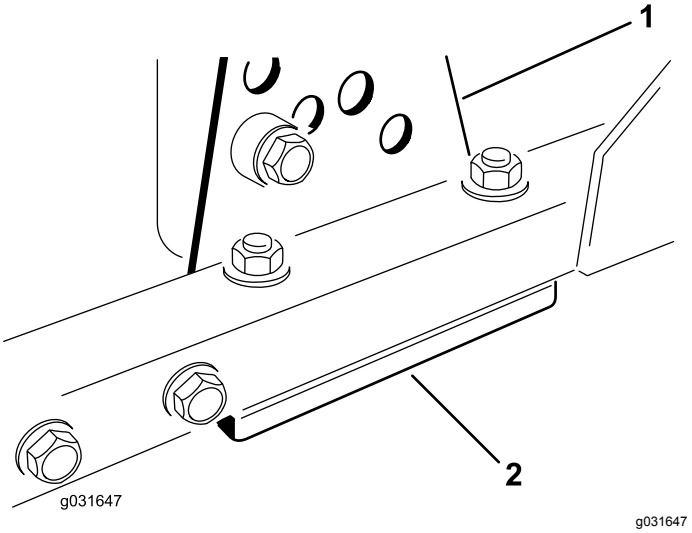

Figure 65

1. Height-of-cut bracket
2. Shims

2. Adjust the 1.5 mm (0.06 inch) shims and/or 0.7 mm (0.03 inch) shim between the cutting unit frame and bracket to achieve the desired height of cut (Figure 65).
3. Install the height-of-cut bracket to the cutting unit frame with the remaining shims assembled below the height-of-cut bracket (Figure 65).
4. Secure the socket-head bolt and spacer and flange nut.

   Note: The socket-head bolt and spacer are held together with thread-locking compound to prevent the spacer from falling inside the cutting unit frame.

5. Verify the 12 o'clock position setting and adjust if needed.
6. Determine if you need to adjust only 1 or both (right and left side) height-of-cut brackets.

   Note: If the 3 o'clock or 9 o'clock side is 1.6 to 6.0 mm (0.06 to 0.24 inch) higher than the new front height, then you do not need to adjust for that side. Adjust the other side to within ± 2.2 mm (0.09 inch) of the correct side.

7. Adjust the right and/or left height-of-cut brackets by repeating steps 1 through 3.
8. Secure the carriage bolts and flange nuts.
9. Verify the 12, 3, and 9 o'clock heights.

Servicing the Front Roller

Inspect the front roller for wear, excess wobble, or binding. Service or replace the roller or components if any of these conditions exist.

Removing the Front Roller

1. Remove the roller-mounting bolt (Figure 66).

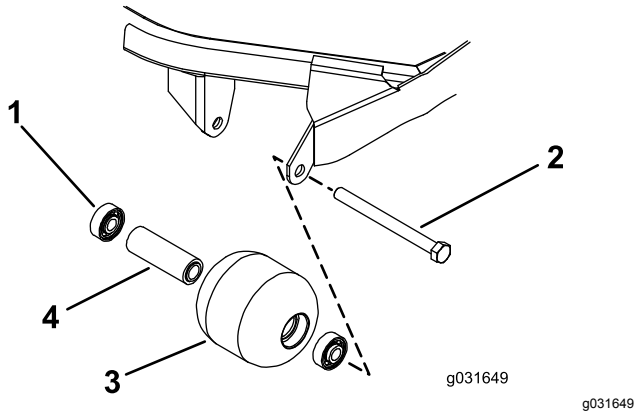

Figure 66

1. Bearing
2. Mounting bolt
3. Front roller
4. Bearing spacer

2. Insert a punch through the end of the roller housing and drive the opposite bearing out by alternating taps to the opposite side of inner-bearing race.

   Note: There should be a 1.5 mm (0.06 inch) lip of inner race exposed.

3. Push the second bearing out in the press.
4. Inspect the roller housing, bearings, and bearing spacer for damage (Figure 66).

   Note: Replace damaged components and assemble the front roller.

Installing the Front Roller

1. Pressing on the outer race only or equally on the inner and outer race, press the first bearing into the roller housing (Figure 66).

   Note: Press on the outer race only or equally on the inner and outer race.

2. Insert the spacer (Figure 66).
3. Pressing on outer race only or equally on the inner and outer race, press the second bearing into the roller housing until it contacts the spacer (Figure 66).
4. Install the roller assembly into the cutting unit frame.

   Important: **Securing the roller assembly with a gap larger than 1.5 mm (0.06 inch) creates a side load on the bearing and can lead to premature bearing failure.**

5. Verify that there is no more than a 1.5 mm (0.06 inch) gap between the roller assembly and the roller-mount brackets of the cutting unit frame.

   Note: If there is a gap over 1.5 mm (0.06 inch), install enough 5/8-inch diameter washers to take up the slop.

6. Torque the mounting bolt to 108 N·m (80 ft-lb).

Blade Maintenance

Blade Safety

- Inspect the blade periodically for wear or damage.
- Use care when checking the blades. Wrap the blades or wear gloves, and use caution when servicing the blades. Only replace or sharpen the blades; never straighten or weld them.
- On multi-bladed machines, take care as rotating 1 blade can cause other blades to rotate.

Servicing the Blade

Removing and Installing the Cutting-Unit Blade(s)

Replace the blade if it hits a solid object, is out of balance, or is bent. Always use genuine Toro replacement blades to ensure safety and optimum performance.

1. Park the machine on a level surface, raise the cutting unit to the transport position, engage the parking brake, shut off the engine, and remove the key.

   Note: Block the cutting unit to prevent it from accidentally falling.

2. Grasp the end of the blade using a rag or thickly-padded glove.
3. Remove the blade bolt, anti-scalp cup, and blade from the spindle shaft (Figure 67).

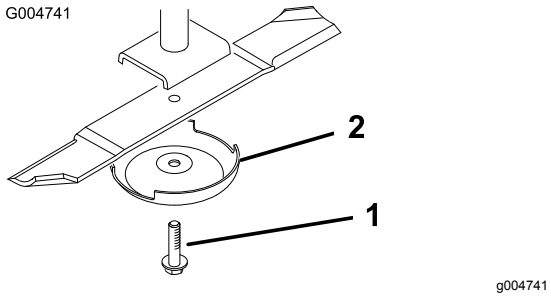

Figure 67

1. Blade bolt
2. Anti-scalp cup

4. Install the blade, anti-scalp cup, and blade bolt and tighten the blade bolt to 115 to 149 N·m (85 to 110 ft-lb).

   Important: **The curved part of the blade must be pointing toward the inside of the cutting unit to ensure proper cutting.**

   Note: After striking a foreign object, torque all spindle-pulley nuts to 115 to 149 N·m (85 to 110 ft-lb).

Inspecting and Sharpening the Blade

Note: Check the blade before using the machine. Sand and abrasive material can wear away the metal that connects the flat and curved parts of the blade. If you notice wear, replace the blade; refer to Inspecting and Sharpening the Blade (page 53).

1. Perform the pre-maintenance procedure; refer to Maintenance Safety (page 30).
2. Block the cutting unit to prevent it from falling accidentally.
3. Examine the cutting ends of the blade carefully, especially where the flat and curved parts of the blade meet (Figure 68).

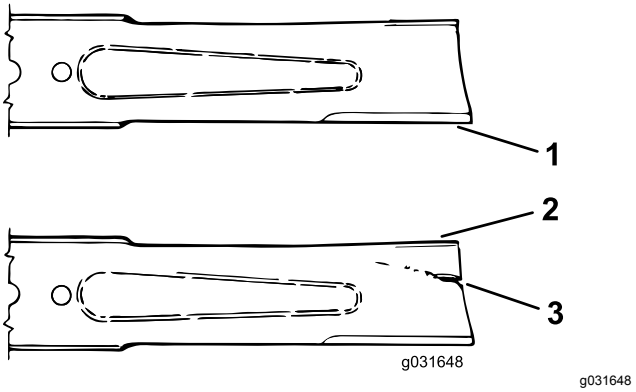

Figure 68

1. Cutting edge
2. Sail
3. Damaged area (wear, slot, or crack)

4. Inspect the cutting edges of all the blades. Sharpen the cutting edges if they are dull or nicked, sharpen only the top of the cutting edge, and maintain the original cutting angle to ensure sharpness (Figure 69).

   Note: The blade remains balanced if the same amount of metal is removed from both cutting edges.

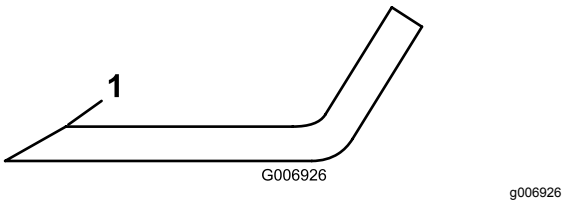

Figure 69

1. Sharpen the blade at this angle only.

5. Lay the blade on a level surface and check its ends to ensure that the blade is straight and parallel.

Note: Position the ends of the blade slightly lower than the center, and the cutting edge lower than the heel of the blade. This blade produces a good quality of cut and requires minimal power from the engine. By contrast a blade that is higher at the ends than the center, or if cutting edge is higher than the heel, the blade is bent or warped and must be replaced.

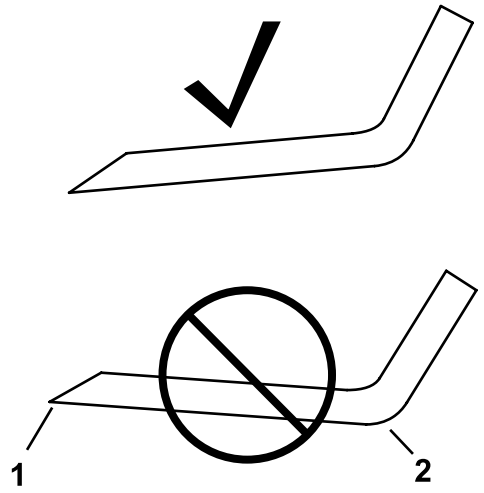

g276373

Figure 70

1. Cutting edge
2. Heel

Note: The blade ends must be slightly lower than the center, and the cutting edge must be lower than the heel of the blade. These characteristics produce a good quality of cut and require less power from the engine.

Note: If the blade ends are higher than the center, or if the blade cutting edges are higher than the heel, replace the blade. These characteristics indicate that the blade is bent or warped.

6. Use the anti-scalp cup and blade bolt to install the blade with the sail facing toward the cutting unit.
7. Tighten the blade bolt to 115 to 149 N·m (85 to 110 ft-lb).

Checking the Blade Stopping Time

Service Interval: Before each use or daily

The cutting unit blades should stop within 7 seconds after you shut off the cutting units.

Note: Ensure that the cutting units are lowered onto a clean section of turf or hard surface to avoid thrown dust and debris.

To verify the stopping time, have an assistant stand at least 6 m (20 ft) away from the cutting unit and watch the blades on 1 of the cutting units. Shut off the cutting units and record the time that it takes for the blades to come to a complete stop. If the time is longer than 7 seconds, the braking valve needs adjustment; contact your authorized Toro distributor for assistance in making this adjustment.

Storage

Storage Safety

- Shut off the engine, remove the key (if equipped), and wait for all movement to stop before you leave the operator's position. Allow the machine to cool before adjusting, servicing, cleaning, or storing it.
- Do not store the machine or fuel container where there is an open flame, spark, or pilot light, such as on a water heater or other appliance.

Preparing the Machine for Storage

Important: **Do not use brackish or reclaimed water to clean the machine.**

Preparing the Traction Unit

1. Thoroughly clean the traction unit, the cutting units, and the engine.
2. Check the tire pressure; refer to Checking the Tire Pressure (page 42).
3. Check all fasteners for looseness; tighten as necessary.
4. Grease or oil all grease fittings and pivot points; refer to Greasing the Bearings and Bushings (page 34).

   Note: Wipe up any excess lubricant.
5. Lightly sand and use touch-up paint on painted areas that are scratched, chipped, or rusted.

   Note: Repair any dents in the metal body.
6. Service the battery and cables as follows:

   A. Remove the battery terminals from the battery posts.

   Note: Always disconnect the negative terminal first and the positive last. Always connect the positive terminal first and the negative last.

   B. Remove the battery.

   C. Slowly recharge the battery before storage and every 60 days thereafter for 24 hours to prevent lead sulfation of the battery.

   To prevent the battery from freezing, make sure it is fully charged. The specific gravity of a fully charged battery is 1.265 to 1.299.

   D. Clean the battery, terminals, and posts with a wire brush and baking-soda solution.

   E. Coat the cable terminals and battery posts with Grafo 112X skin-over grease (Toro Part No. 505-47) or petroleum jelly to prevent corrosion.

   F. Store the battery on the shelf or on the machine in a cool area. Leave the cables disconnected if you store it on the machine.

Preparing the Engine

1. Drain the engine oil from the oil pan and replace the drain plug.
2. Remove and discard the oil filter. Install a new oil filter.
3. Refill the oil pan with designated quantity of motor oil.
4. Start the engine and run it at idle speed for approximately 2 minutes.
5. Stop the engine.
6. For storage over 30 days, prepare the fuel system as follows:
   - Add a petroleum based stabilizer/conditioner to fuel in the tank.

     Follow the mixing instructions from stabilizer manufacturer. Do not use an alcohol based stabilizer (ethanol or methanol).

     Note: A fuel stabilizer/conditioner is most effective when mixed with fresh fuel and used at all times.
   - Run the engine to distribute conditioned fuel through the fuel system for approximately 5 minutes.
   - Stop the engine, allow it to cool, and drain the fuel tank.
   - Restart the engine and run it until it stops.
   - Start and run the engine until it will not start again.
   - Dispose of fuel properly. Recycle as per local codes

     Important: **Do not store stabilizer/conditioned fuel over 90 days**
7. Remove the spark plugs and check their condition; refer to Replacing the Spark Plugs (page 39).
8. With the spark plugs removed from the engine, pour 2 tablespoons of engine oil into the spark plug hole.
9. Use the starter to crank the engine and distribute the oil inside the cylinder.
10. Install the spark plugs and tighten to recommended torque; refer to Replacing the Spark Plugs (page 39).

    Note: Do not install the wires on the spark plugs.
11. Check anti-freeze protection and add as needed for expected minimum temperature in your area.
12. Secure all fuel system fittings.
13. Thoroughly clean and service the air cleaner assembly.
14. Seal the air cleaner inlet and the exhaust outlet with weatherproof tape.

Storing the Cutting Units

If a cutting unit is separated from the traction unit for any length of time, install a spindle plug in the top of the spindle to protect the spindle from dust and water.

Notes:

Notes:

California Proposition 65 Warning Information

What is this warning?

You may see a product for sale that has a warning label like the following:

WARNING: Cancer and Reproductive Harm—www.p65Warnings.ca.gov.

What is Prop 65?

Prop 65 applies to any company operating in California, selling products in California, or manufacturing products that may be sold in or brought into California. It mandates that the Governor of California maintain and publish a list of chemicals known to cause cancer, birth defects, and/or other reproductive harm. The list, which is updated annually, includes hundreds of chemicals found in many everyday items. The purpose of Prop 65 is to inform the public about exposure to these chemicals.

Prop 65 does not ban the sale of products containing these chemicals but instead requires warnings on any product, product packaging, or literature with the product. Moreover, a Prop 65 warning does not mean that a product is in violation of any product safety standards or requirements. In fact, the California government has clarified that a Prop 65 warning "is not the same as a regulatory decision that a product is 'safe' or 'unsafe.'" Many of these chemicals have been used in everyday products for years without documented harm. For more information, go to https://oag.ca.gov/prop65/faqs-view-all.

A Prop 65 warning means that a company has either (1) evaluated the exposure and has concluded that it exceeds the "no significant risk level"; or (2) has chosen to provide a warning based on its understanding about the presence of a listed chemical without attempting to evaluate the exposure.

Does this law apply everywhere?

Prop 65 warnings are required under California law only. These warnings are seen throughout California in a wide range of settings, including but not limited to restaurants, grocery stores, hotels, schools, and hospitals, and on a wide variety of products. Additionally, some online and mail order retailers provide Prop 65 warnings on their websites or in catalogs.

How do the California warnings compare to federal limits?

Prop 65 standards are often more stringent than federal and international standards. There are various substances that require a Prop 65 warning at levels that are far lower than federal action limits. For example, the Prop 65 standard for warnings for lead is 0.5 µg/day, which is well below the federal and international standards.

Why don't all similar products carry the warning?

- Products sold in California require Prop 65 labelling while similar products sold elsewhere do not.
- A company involved in a Prop 65 lawsuit reaching a settlement may be required to use Prop 65 warnings for its products, but other companies making similar products may have no such requirement.
- The enforcement of Prop 65 is inconsistent.
- Companies may elect not to provide warnings because they conclude that they are not required to do so under Prop 65; a lack of warnings for a product does not mean that the product is free of listed chemicals at similar levels.

Why does Toro include this warning?

Toro has chosen to provide consumers with as much information as possible so that they can make informed decisions about the products they buy and use. Toro provides warnings in certain cases based on its knowledge of the presence of one or more listed chemicals without evaluating the level of exposure, as not all the listed chemicals provide exposure limit requirements. While the exposure from Toro products may be negligible or well within the "no significant risk" range, out of an abundance of caution, Toro has elected to provide the Prop 65 warnings. Moreover, if Toro does not provide these warnings, it could be sued by the State of California or by private parties seeking to enforce Prop 65 and subject to substantial penalties.

The Toro Warranty

Two-Year or 1,500 Hours Limited Warranty

Conditions and Products Covered

The Toro Company and its affiliate, Toro Warranty Company, pursuant to an agreement between them, jointly warrant your Toro Commercial product ("Product") to be free from defects in materials or workmanship for 2 years or 1,500 operational hours*, whichever occurs first. This warranty is applicable to all products with the exception of Aerators (refer to separate warranty statements for these products). Where a warrantable condition exists, we will repair the Product at no cost to you including diagnostics, labor, parts, and transportation. This warranty begins on the date the Product is delivered to the original retail purchaser.
* Product equipped with an hour meter.

Instructions for Obtaining Warranty Service

You are responsible for notifying the Commercial Products Distributor or Authorized Commercial Products Dealer from whom you purchased the Product as soon as you believe a warrantable condition exists. If you need help locating a Commercial Products Distributor or Authorized Dealer, or if you have questions regarding your warranty rights or responsibilities, you may contact us at:

Toro Commercial Products Service Department
Toro Warranty Company
8111 Lyndale Avenue South
Bloomington, MN 55420-1196

952–888–8801 or 800–952–2740
E-mail: commercial.warranty@toro.com

Owner Responsibilities

As the product owner, you are responsible for required maintenance and adjustments stated in your *Operator's Manual*. Repairs for product issues caused by failure to perform required maintenance and adjustments are not covered under this warranty.

Items and Conditions Not Covered

Not all product failures or malfunctions that occur during the warranty period are defects in materials or workmanship. This warranty does not cover the following:

- Product failures which result from the use of non-Toro replacement parts, or from installation and use of add-on, or modified non-Toro branded accessories and products.
- Product failures which result from failure to perform recommended maintenance and/or adjustments.
- Product failures which result from operating the Product in an abusive, negligent, or reckless manner.
- Parts consumed through use that are not defective. Examples of parts which are consumed, or used up, during normal Product operation include, but are not limited to, brake pads and linings, clutch linings, blades, reels, rollers and bearings (sealed or greasable), bed knives, spark plugs, castor wheels and bearings, tires, filters, belts, and certain sprayer components such as diaphragms, nozzles, and check valves.
- Failures caused by outside influence, including, but not limited to, weather, storage practices, contamination, use of unapproved fuels, coolants, lubricants, additives, fertilizers, water, or chemicals.
- Failure or performance issues due to the use of fuels (e.g. gasoline, diesel, or biodiesel) that do not conform to their respective industry standards.
- Normal noise, vibration, wear and tear, and deterioration. Normal "wear and tear" includes, but is not limited to, damage to seats due to wear or abrasion, worn painted surfaces, scratched decals or windows.

Parts

Parts scheduled for replacement as required maintenance are warranted for the period of time up to the scheduled replacement time for that part. Parts replaced under this warranty are covered for the duration of the original product warranty and become the property of Toro. Toro will make the final decision whether to repair any existing part or assembly or replace it. Toro may use remanufactured parts for warranty repairs.

Deep Cycle and Lithium-Ion Battery Warranty

Deep cycle and Lithium-Ion batteries have a specified total number of kilowatt-hours they can deliver during their lifetime. Operating, recharging, and maintenance techniques can extend or reduce total battery life. As the batteries in this product are consumed, the amount of useful work between charging intervals will slowly decrease until the battery is completely worn out. Replacement of worn out batteries, due to normal consumption, is the responsibility of the product owner. Note: (Lithium-Ion battery only): Pro-rated after 2 years. Refer to the battery warranty for additional information.

Lifetime Crankshaft Warranty (ProStripe 02657 Model Only)

The Prostripe which is fitted with a genuine Toro Friction Disc and Crank-Safe Blade Brake Clutch (integrated Blade Brake Clutch (BBC) + Friction Disc assembly) as original equipment and used by the original purchaser in accordance with recommended operating and maintenance procedures, are covered by a Lifetime Warranty against engine crankshaft bending. Machines fitted with friction washers, Blade Brake Clutch (BBC) units and other such devices are not covered by the Lifetime Crankshaft Warranty.

Maintenance is at Owner's Expense

Engine tune-up, lubrication, cleaning and polishing, replacement of filters, coolant, and completing recommended maintenance are some of the normal services Toro products require that are at the owner's expense.

General Conditions

Repair by an Authorized Toro Distributor or Dealer is your sole remedy under this warranty.

Neither The Toro Company nor Toro Warranty Company is liable for indirect, incidental or consequential damages in connection with the use of the Toro Products covered by this warranty, including any cost or expense of providing substitute equipment or service during reasonable periods of malfunction or non-use pending completion of repairs under this warranty. Except for the Emissions warranty referenced below, if applicable, there is no other express warranty. All implied warranties of merchantability and fitness for use are limited to the duration of this express warranty.

Some states do not allow exclusions of incidental or consequential damages, or limitations on how long an implied warranty lasts, so the above exclusions and limitations may not apply to you. This warranty gives you specific legal rights, and you may also have other rights which vary from state to state.

Note Regarding Emissions Warranty

The Emissions Control System on your Product may be covered by a separate warranty meeting requirements established by the U.S. Environmental Protection Agency (EPA) and/or the California Air Resources Board (CARB). The hour limitations set forth above do not apply to the Emissions Control System Warranty. Refer to the Engine Emission Control Warranty Statement supplied with your product or contained in the engine manufacturer's documentation.

Countries Other than the United States or Canada

Customers who have purchased Toro products exported from the United States or Canada should contact their Toro Distributor (Dealer) to obtain guarantee policies for your country, province, or state. If for any reason you are dissatisfied with your Distributor's service or have difficulty obtaining guarantee information, contact your Authorized Toro Service Center.