Form No. 3425-850 Rev C

TORO®

Count on it.

Operator's Manual

Versa Vac

Model No. 07053—Serial No. 403360001 and Up

Register at www.Toro.com.
Original Instructions (EN)

CE

3425-850 C

This product complies with all relevant European directives. For details, please see the separate product specific Declaration of Conformity (DOC) sheet.

⚠ WARNING

CALIFORNIA
Proposition 65 Warning

Use of this product may cause exposure to chemicals known to the State of California to cause cancer, birth defects, or other reproductive harm.

Introduction

The Versa Vac is to be used in conjunction with the combination deck or finger deck. The machine is intended to be used by professional, hired operators in commercial applications. The machine is designed to dethatch, renovate, and remove debris from large turf areas in 1 pass.

Read this information carefully to learn how to operate and maintain your product properly and to avoid injury and product damage. You are responsible for operating the product properly and safely.

Visit www.Toro.com for product safety and operation training materials, accessory information, help finding a dealer, or to register your product.

Whenever you need service, genuine Toro parts, or additional information, contact an Authorized Service Dealer or Toro Customer Service and have the model and serial numbers of your product ready. Figure 1 identifies the location of the model and serial numbers on the product. Write the numbers in the space provided.

Model No. _____

Serial No. _____

This manual identifies potential hazards and has safety messages identified by the safety-alert symbol (Figure 1), which signals a hazard that may cause serious injury or death if you do not follow the recommended precautions.



g000502

Figure 1
Safety-alert symbol

This manual uses 2 words to highlight information. **Important** calls attention to special mechanical information and **Note** emphasizes general information worthy of special attention.

Contents

Safety 3
General Safety 3
Safety and Instructional Decals 3
Setup 6
1 Connecting the Machine to the Traction Unit 7
2 Adjusting the PTO Shaft Length 7
3 Connecting the PTO Shaft 7
4 Greasing the Machine 8
Product Overview 8
Controls 8
Before Operation 9
Before Operation Safety 9
Hydraulic Fluid Specifications 10
Checking the Hydraulic Fluid 11
Checking the Tire Pressure 11
Checking the Torque of the Wheel Nuts 11
Connecting the Machine to the Traction Unit 11
Connecting the PTO Shaft 12
During Operation 13
During Operation Safety 13
Operating the Traction Unit Hydraulics 14
Operating the Machine 14
After Operation 15
After Operation Safety 15
Removing the Machine from the Traction Unit 15
Transporting the Machine 15
Maintenance 16
Recommended Maintenance Schedule(s) 16
Maintenance Safety 16
Lubricating the Machine 17
Hydraulic System Safety 17
Checking the Hydraulic Lines and Hoses 18
Servicing the Hydraulic Fluid and Filter 18
Storage 20

© 2018—The Toro® Company

8111 Lyndale Avenue South
Bloomington, MN 55420

Contact us at www.Toro.com.
Printed in the USA
All Rights Reserved

Safety

General Safety

This product is capable of amputating hands and feet and of throwing objects. Always follow all safety instructions to avoid serious personal injury.

Using this product for purposes other than its intended use could prove dangerous to you and bystanders.

- Read and understand the contents of this *Operator's Manual* before using the machine.
- Do not put your hands or feet near moving components of the machine.
- Use your full attention while operating the machine. Do not engage in any activity that causes distractions; otherwise, injury or property damage may occur.
- Do not operate the machine without all guards and other safety protective devices in place and functioning properly on the machine.
- Keep clear of any discharge opening. Keep bystanders and pets a safe distance away from the machine.
- Keep children, bystanders, and pets out of the operating area. Never allow children to operate the machine.
- Always shut off the engine of the traction unit, remove the key (if equipped), wait for all moving parts to stop, and allow the machine to cool before adjusting, servicing, cleaning, or storing the machine.

Improperly using or maintaining this machine can result in injury. To reduce the potential for injury, comply with these safety instructions and always pay attention to the safety-alert symbol ⚠, which means Caution, Warning, or Danger—personal safety instruction. Failure to comply with these instructions may result in personal injury or death.

You can find additional safety information where needed throughout this manual.

Safety and Instructional Decals

Safety decals and instructions are easily visible to the operator and are located near any area of potential danger. Replace any decal that is damaged or missing.

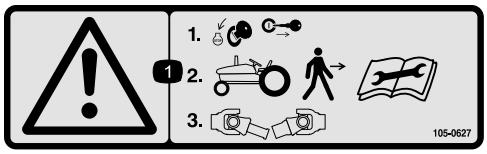

decal105-0627

105-0627

1. Warning—stop the engine and remove the ignition key before getting off of the tractor; read the instructions before servicing or performing maintenance, then disconnect the PTO shaft.

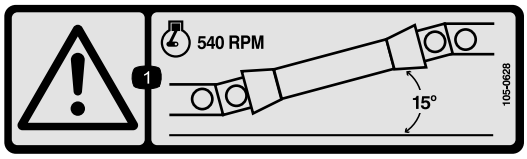

decal105-0628

105-0628

1. Warning—run the engine at no more than 540 rpm and keep the PTO shaft angle under 15 degrees.

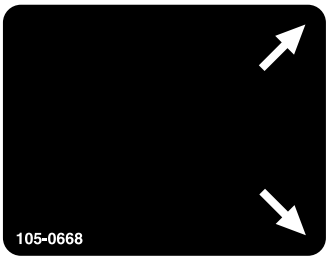

decal105-0668

105-0668

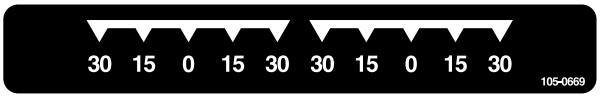

decal105-0669

105-0669

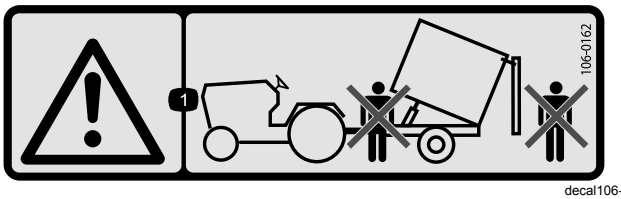

decal106-0162

106-0162

1. Warning—do not stand in front of or behind the trailer when dumping.

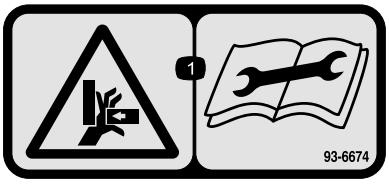

decal93-6674

93-6674

1. Crushing hazard, hand—read the instructions before servicing or performing maintenance.

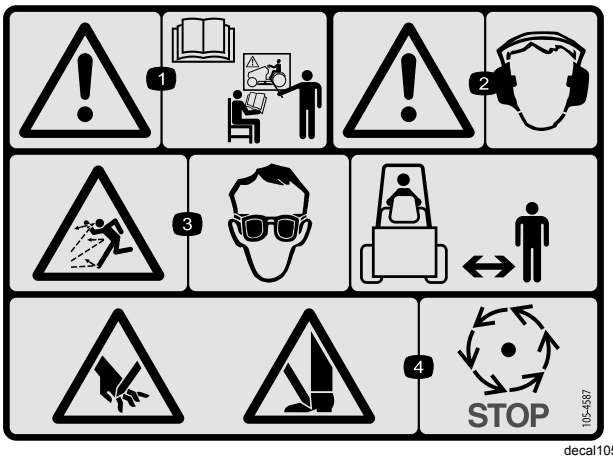

decal105-4587

105-4587

1. Warning—read the *Operator's Manual* and receive training before operating the machine.
2. Warning—wear hearing protection.
3. Thrown object hazard—wear eye protection; keep bystanders a safe distance from the machine.
4. Cutting hazard of hand or foot—wait for moving parts to stop.

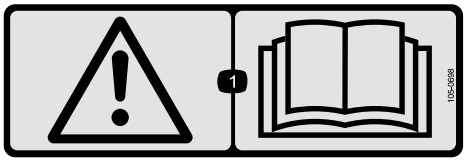

decal105-0698

105-0698

Apply over decal 105-0707 for CE compliance

1. Warning—read the *Operator's Manual*.

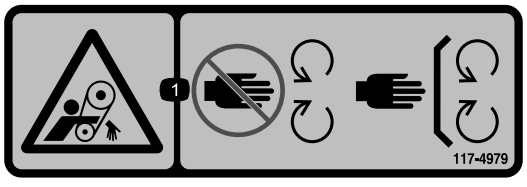

decal117-4979

117-4979

1. Entanglement hazard, belt—keep away from moving parts; keep all guards and shields in place.

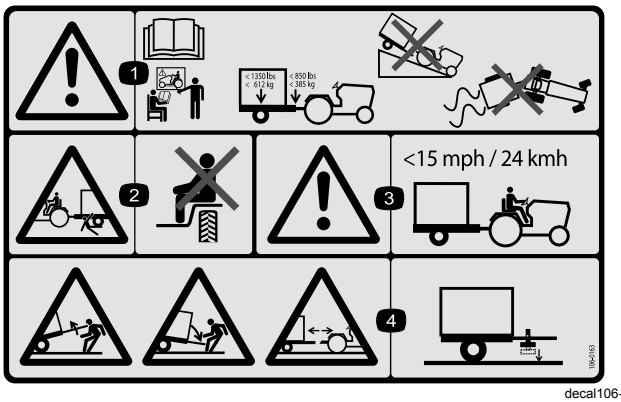

decal106-0163

106-0163

1. Warning—read the *Operator's Manual* and receive training before operating the machine; the maximum load is 612 kg (1350 lb) trailer weight and 385 kg (850 lb) tongue weight; do not drive the machine and trailer down hill or you may lose control.
2. Crushing hazard, trailer—do not carry passengers.
3. Warning—do not exceed 24 km/h (15 mph).
4. Stored energy hazard, trailer—do not disconnect the trailer without first putting down the jack.

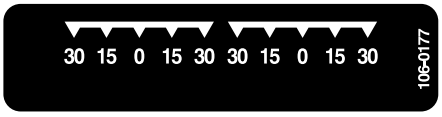

decal106-0177

106-0177



decal106-0178

106-0178



decal110-7506

110-7506

1. Warning—read the *Operator's Manual* and receive training; before operating the combination deck flail.

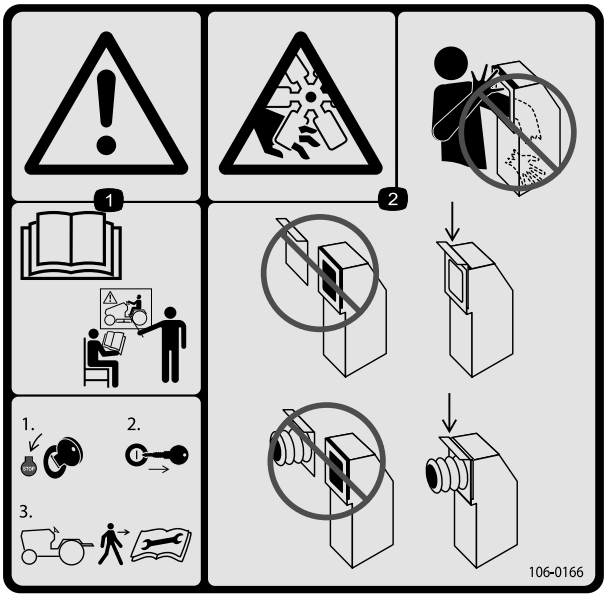

decal106-0166

106-0166

1. Warning—read the and receive training before operating the machine; stop the engine and remove the ignition key before getting off of the tractor; read the *Operator's Manual* before servicing or performing maintenance.
2. Cutting/dismemberment hazard of hand, fan—do not place your hand or arm in the vacuum chute; keep the hose door or hose installed at all times.

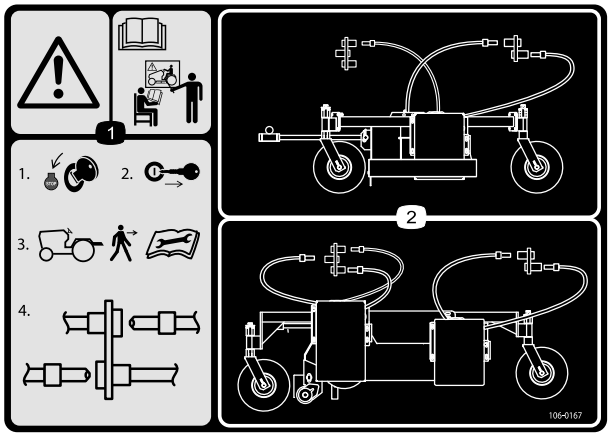

decal106-0167

106-0167

1. Warning—read the and receive training before operating the machine; 1) Stop the engine; 2) Remove the ignition key before getting off of the tractor; 3) read the *Operator's Manual* before servicing or performing maintenance; 4) Connect or disconnect the hydraulic hoses.
2. Hydraulic hose routing and connections.

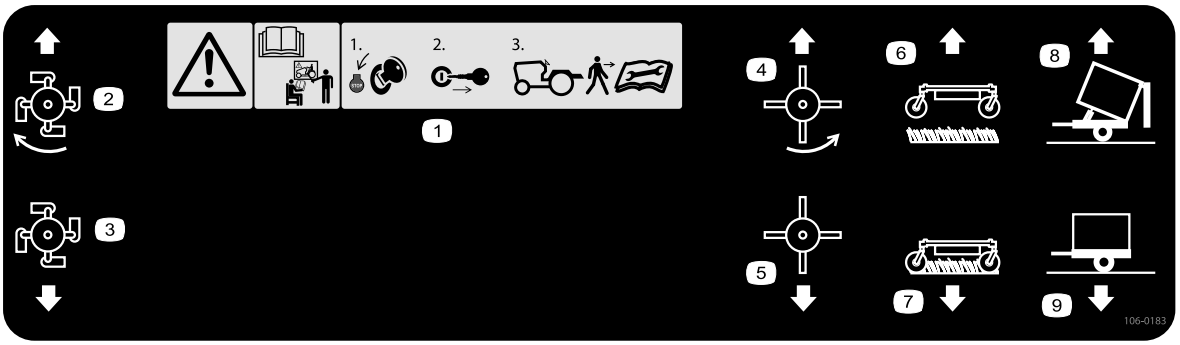

decal106-0183

106-0183

1. Warning—read the and receive training before operating the machine; 1) Stop the engine and remove the ignition key before getting off of the tractor; 2) Read the *Operator's Manual* before servicing or performing maintenance.
2. Flail on
3. Flail off
4. Rubber fingers on
5. Rubber fingers off
6. Vacuum unit up
7. Vacuum unit down
8. Trailer dump
9. Trailer upright



decal133-8061

133-8061

Setup

Loose Parts

Use the chart below to verify that all parts have been shipped.

Procedure	Description	Qty.	Use
1	Jack	1	Connect the machine to the traction units.
2	PTO shaft	1	Adjust the PTO shaft length.
3	No parts required	–	Connect the PTO shaft.
4	No parts required	–	Grease the machine.

Media and Additional Parts

Description	Qty.	Use
Auxiliary control lever	1	Install the control lever only if the combination deck is installed.
Operator’s Manual	1	Read before operating the machine.
Declaration of Conformity	1	Use for CE compliance.

⚠ CAUTION

Without the proper amount of ballast in the tires, the traction unit may become unstable and cause bodily injury.

Make sure that the front of the traction unit is equipped with the proper amount of ballast; refer to the traction unit *Operator's Manual* for ballast requirements.

1

Connecting the Machine to the Traction Unit

Parts needed for this procedure:

1	Jack

Procedure

Refer to Connecting the Machine to the Traction Unit (page 11).

2

Adjusting the PTO Shaft Length

Parts needed for this procedure:

1	PTO shaft

Procedure

A long PTO shaft is supplied with the machine to accommodate traction units with larger PTO shaft variations. For most traction units, this shaft is too long and must be cut to the correct length or damage may result.

1. Measure the distance from the lock groove of the traction unit PTO shaft to the lock groove of the machine impeller input shaft.

   Note: Record this dimension.

2. Fully collapse the PTO shaft and measure the distance between the lock pin collars.

   Note: Record this dimension.

3. At its shortest length, the 2 halves of the PTO shaft must have at least 37 mm (1-1/2 inches) of additional clearance to collapse (Figure 2).

   Note: If the dimension in Step 1 is not at least 37 mm (1-1/2 inches) greater than the dimension in Step 2, the PTO shaft is too long; proceed to step 4. If there is enough clearance to allow the PTO shaft to collapse, proceed to Step 9.

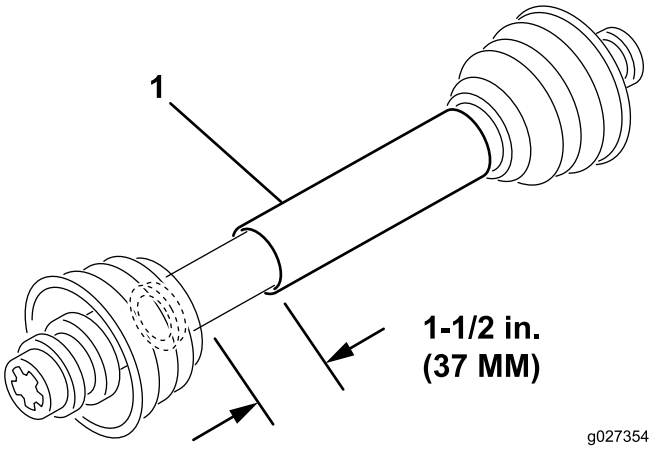

Figure 2

1. PTO shaft

4. Use the following calculation to establish how much shorter the shaft must be, when connected, to ensure a clearance of 37 (1-1/2 inches):

   A. Subtract the dimension recorded in Step 2 from the dimension recorded in Step 1.

      Note: Record this dimension.

   B. Subtract the result in Step A from 37 mm (1-1/2 inches).

      Note: The PTO shaft must be shortened by this amount.

5. Using a hacksaw, shorten the guards and the steel tubes by the calculated length.

   Note: Cut both halves of the PTO shaft.

6. Deburr the ends of the steel tubes internally and externally.
7. Remove all debris from the tube sections.
8. Grease the steel tubes liberally.
9. Assemble the PTO shaft and secure it to the machine and traction unit.
10. Measure the shaft; if it is not at least 37 mm (1-1/2 inches), repeat the procedure.

3

Connecting the PTO Shaft

No Parts Required

Procedure

Connect the PTO shaft; refer to Connecting the PTO Shaft (page 12)

4

Greasing the Machine

No Parts Required

Procedure

Grease the machine; refer to Lubricating the Machine (page 17)

Product Overview

Controls

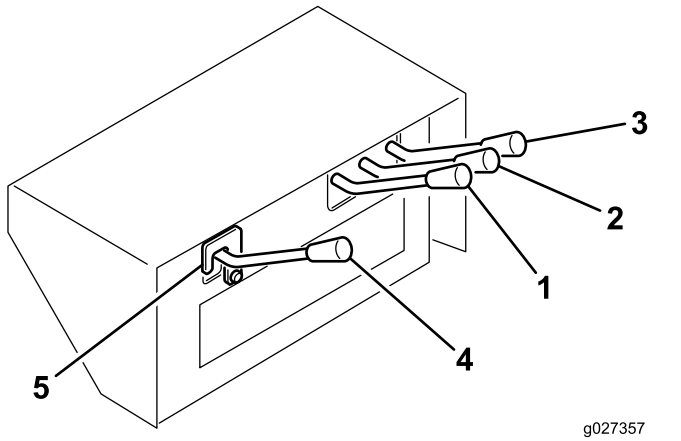

Figure 3

1. Brush control
2. Deck lift control
3. Trailer lift control
4. Auxiliary control
5. Safety latch

Trailer Lift Control

Used to dump the trailer box (Figure 3). The up position raises the box and opens the door, and the down position lowers the box and closes the door.

Deck Lift Control

Used to raise and lower the primary deck (Figure 3). The up position raises the deck, and the down position lowers the deck.

Brush Control

Used to operate the rotating finger deck (sold separately). The up position starts the deck, and the down position stops the deck (Figure 3).

Auxiliary Control

Used to operate the combination deck (sold separately). The up position starts the deck, and the down position stops the deck (Figure 3).

Important: **The auxiliary control lever is shipped loose to prevent accidental engagement of the unused hydraulic circuit. Do not install or operate the auxiliary control lever unless the combination deck is installed.**

To install the auxiliary control lever, complete the following procedure:

1. Remove the control lever cover.

2. Remove the 2 cotter pins from the control valve spool.
3. Mount the auxiliary control lever to the valve spool with the cotter pins.
4. Install the control lever cover.

Safety Latch

Only remove the safety latch when operating the combination deck (Figure 3).

Traction Unit PTO

The vacuum fan on the machine will run as soon as the PTO is engaged (Figure 3). The finger and combination decks are engaged by the hydraulic controls on the machine.

Important: **Always engage the traction unit PTO gently at a low engine speed. Sudden engagement of the traction unit PTO at a high engine speed will likely cause damage to the drive line components.**

Operation

Note: Determine the left and right sides of the machine from the normal operating position.

⚠ CAUTION

If you leave the key in the traction unit ignition switch, someone could accidently start the engine and seriously injure you or other bystanders.

Remove the key from the traction unit ignition before you do any maintenance.

Before Operation

Before Operation Safety

General Safety

- Do not allow children or untrained people to operate or service the machine. Local regulations may restrict the age of the operator. The owner is responsible for training all operators and mechanics.
- Become familiar with the safe operation of the equipment, operator controls, and safety signs.
- Know how to stop the machine and shut off the engine quickly.
- Do not operate the machine without all guards and other safety protective devices in place and functioning properly on the machine.
- Ensure that all hydraulic line connectors are tight, and all hydraulic hoses and lines are in good condition before applying pressure to the system.
- Before operating, always inspect the machine to ensure that the flail knives are in good working condition. Replace worn or damaged knives.
- Inspect the area where you will use the machine and remove all objects that the machine could strike.
- Ensure that your traction unit is suitable for use with an implement of this weight by checking with your traction unit supplier or manufacturer.
- The traction unit must have the proper wheel base and tread width and be equipped with a roll bar and seat belt to operate safely on hilly terrain. The normal operating speed is 10 km/h (6 mph) but will vary with terrain and debris being picked up. The maximum transport speed is 24 km/h (15 mph) with slower speeds required on hilly terrain. Refer to the traction unit *Operator's Manual* for information or traction unit service agency if you have any questions on safe operation.

- The brakes of the tow traction unit must have the capacity to stop the machine with machine fully loaded and traveling at the maximum recommended transport speed.
- The power take-off drive of the machine requires a traction unit with operating speeds of 540 rpm and output power of 32 hp or higher. Do not exceed the 540 rpm speed.
- The machine must comply with local road requirements if transported on public roads. A slow-moving vehicle sign has been provided. Signal lights and brakes are not provided and may be required in some areas.

Hydraulic Fluid Specifications

The reservoir is filled at the factory with approximately 38 L (10 US gallons) of high-quality hydraulic fluid. Check the level of the hydraulic fluid before you first start the engine and daily thereafter; refer to Checking the Hydraulic Fluid (page 11).

Recommended replacement fluid: Toro PX Extended Life Hydraulic Fluid; available in 19 L (5 US gallon) pails or 208 L (55 US gallon) drums.

Note: A machine using the recommended replacement fluid requires less frequent fluid and filter changes; refer to Servicing the Hydraulic Fluid and Filter (page 18).

Alternative fluids: If Toro PX Extended Life Hydraulic Fluid is not available, you may use another conventional, petroleum-based hydraulic fluid having specifications that fall within the listed range for all the following material properties and that it meets industry standards. Do not use synthetic fluid. Consult with your lubricant distributor to identify a satisfactory product.

Note: Toro does not assume responsibility for damage caused by improper substitutions, so use products only from reputable manufacturers who will stand behind their recommendation.

High Viscosity Index/Low Pour Point Anti-wear Hydraulic Fluid, ISO VG 46

Material Properties:	
Viscosity, ASTM D445	cSt @ 40°C 44 to 48
Viscosity Index ASTM D2270	140 or higher
Pour Point, ASTM D97	-34°F to -49°F
Industry Specifications:	Eaton Vickers 694 (I-286-S, M-2950-S/35VQ25 or M-2952-S)

Note: Many hydraulic fluids are almost colorless, making it difficult to spot leaks. A red dye additive for the hydraulic fluid is available in 20 ml (0.67 fl oz) bottles. A bottle is sufficient for 15 to 22 L (4 to 6 US gallons) of hydraulic fluid. Order Part No. 44-2500 from your authorized Toro distributor.

Checking the Hydraulic Fluid

1. Operate the machine so that the fluid is warm, park the machine on a level surface, and shut off the engine.
2. Check the level of the fluid by viewing the sight gauge (Figure 4). If the fluid is up to the middle of the gauge, the fluid level is sufficient.

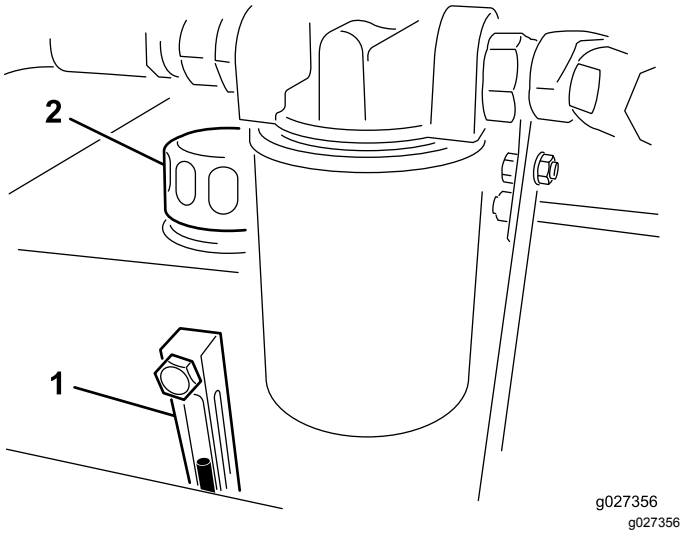

Figure 4

1. Sight gauge
2. Hydraulic reservoir cap

3. If the fluid level is below the middle of the gauge, remove the cap from the hydraulic fluid reservoir and slowly add an appropriate hydraulic fluid until the level reaches the middle (maximum) of the sight gauge; refer to Servicing the Hydraulic Fluid and Filter (page 18).

   Important: **Do not over fill; if you exceed the max fill line of the sight gauge you must remove the excess fluid; refer to Changing the Hydraulic Fluid (page 18).**

   Important: **To prevent system contamination, clean the top of the hydraulic fluid containers before puncturing. Ensure that the pour spout and the funnel are clean.**
4. Install the reservoir cap.

Checking the Tire Pressure

The correct air pressure in the tires is 124 kpa (18 psi).

Important: **Maintain even pressure in both tires to ensure proper machine performance.** ***Do not under inflate.***

Checking the Torque of the Wheel Nuts

Service Interval: After the first 2 hours
After the first 10 hours
Every 200 hours

⚠ WARNING

Failure to maintain the proper torque of the wheel nuts could result in failure or loss of the wheel and may result in personal injury.

Connecting the Machine to the Traction Unit

1. Position the machine on a flat, level surface.
2. Insert the jack onto the frame pin and secure it with the pin (Figure 5).

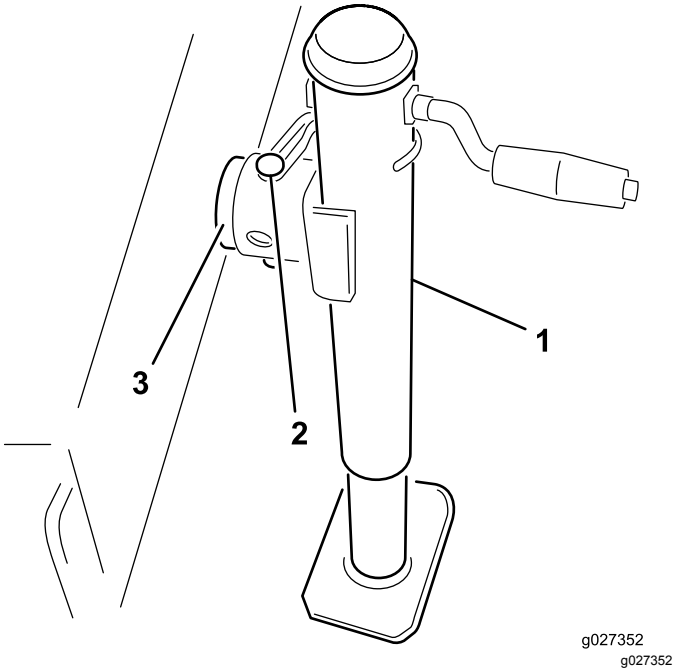

Figure 5

1. Jack
2. Pin
3. Frame pin

3. Adjust the jack height until the machine frame is parallel with the ground.
4. Back the traction unit up to the machine.

5. Adjust the machine hitch clevis to the same level as the traction unit hitch as follows:
   A. Remove the bolts and locknuts that secure the hitch clevis (Figure 6) to the machine frame.

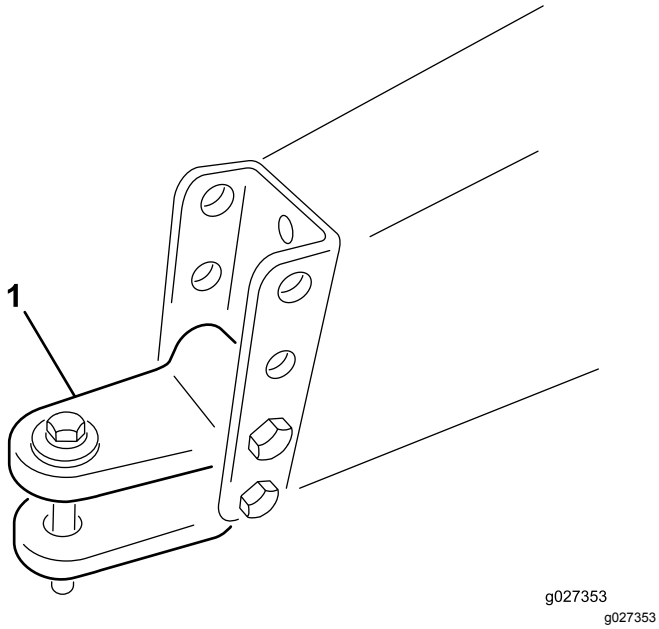

Figure 6

1. Clevis hitch

   B. Raise or lower the hitch clevis to the position approximately level with the traction unit hitch.
   C. Secure it with the bolts and locknuts that were previously removed.
6. Connect the traction unit hitch to the machine clevis hitch with the hitch pin and clevis.
7. Remove the jack pin, rotate the jack upward to the storage position.

Connecting the PTO Shaft

1. Connect the PTO shaft to the machine impeller input shaft.
2. Connect the PTO shaft to the rear traction unit PTO shaft.
3. Slide the PTO shaft forward as far as it will go.
4. Press the pin to secure the PTO shaft in place.

   Note: Slide the PTO shaft back and forth to ensure that it is properly locked.
5. Connect the shield safety chain to the traction unit (Figure 7).

   Note: Ensure that the chain remains slack when you turn the traction unit.

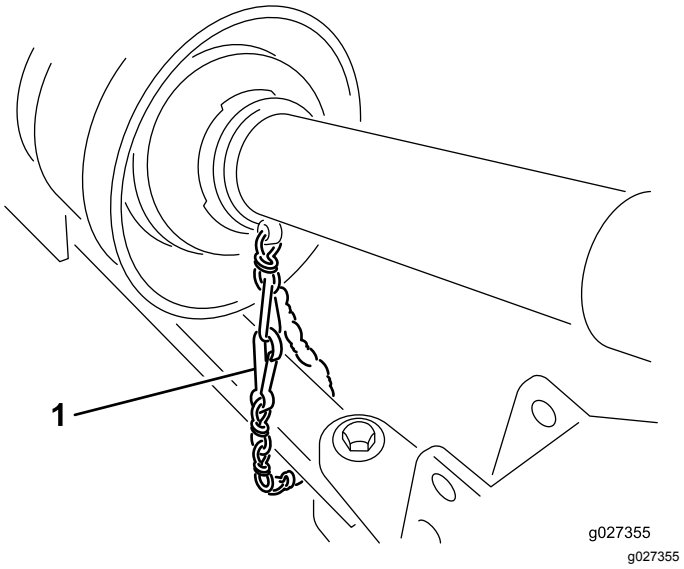

Figure 7

1. Safety chain

⚠ CAUTION

If the shield chains are not connected, the shields could rotate during operation and cause bodily injury.

Keep all PTO shields in place and connect the shield chain to the traction unit or PTO shields.

During Operation

During Operation Safety

General Safety

- The owner/operator can prevent and is responsible for accidents that may cause personal injury or property damage.
- Wear appropriate clothing, including eye protection; slip-resistant, substantial footwear; long pants; and hearing protection. Tie back long hair and do not wear loose clothing or loose jewelry.
- Use your full attention while operating the machine. Do not engage in any activity that causes distractions; otherwise, injury or property damage may occur.
- Do not operate the machine when tired, ill, or under the influence of alcohol or drugs.
- Do not carry passengers on the machine and keep bystanders and pets away from the machine during operation..
- The brush, rubber fingers, flail, and vacuum of the machine may pick up and propel debris and small objects in its path during operation; keep bystanders and pets away from the machine during operation.
- Always disengage the PTO, shut off the engine of the traction unit, remove the key, and wait for all moving parts to stop before leaving the operator's position.
- Do not step over the PTO shaft to get to the other side of the machine. Walk around the machine.
- Always stand away from the rear of the machine when opening the rear door.
- Operate the machine only in good visibility to avoid holes or hidden hazards.
- Keep your hands and feet away from the flail knives.
- Look behind and down before backing up to be sure of a clear path.
- Stop the machine, shut off the engine, wait for all moving parts to stop, and inspect the machine after striking an object or if there is an abnormal vibration in the machine. Make all necessary repairs before resuming operation.
- Always maintain proper traction unit tire pressure.
- Ensure that you comply with all regulations before transporting equipment on the public roads and highways. Make sure that all required reflectors and lights are in place and are clean and visible by overtaking and oncoming traffic.
- Reduce speed on rough roads and surfaces
- For all PTO shaft steel parts (tubes, bearings, joints, etc.) disassembly or repairs, it is highly advisable to contact your authorized Toro distributor. Removal of components for repairs and reassembly may damage some parts if not performed with special tools by trained technicians.
- The PTO shaft must not be used without the guards supplied.

Dumping Safety

- Moving the rear door and dumping debris can cause serious injury. Stay clear of the machine while it is backing up or dumping.
- Keep bystanders a safe distance from the machine when operating to dump debris or when opening and closing the rear door.
- Under rare circumstances wet, compressed grass clippings may generate heat. Always empty the machine before storing it.
- To avoid the risk of electrical shock, dump the machine only in areas that are clear of overhead wires and other obstructions.
- **Never** dump the machine on a slope; always dump the machine on level ground.

Slope Safety

- Review the traction unit specifications to ensure that you do not exceed its slope capabilities.
- Slopes are a major factor related to loss of control and rollover accidents, which can result in severe injury or death. You are responsible for safe slope operation. Operating the machine on any slope requires extra caution.
- Evaluate the site conditions to determine if the slope is safe for machine operation including surveying the site. Always use common sense and good judgment when performing this survey.
- Review the slope instructions listed below for operating the machine on slopes and review the conditions to determine whether you can operate the machine in the conditions on that day and at that site. Changes in the terrain can result in a change in slope operation for the machine.
- Avoid starting, stopping, or turning the machine on slopes. Avoid making sudden changes in speed or direction. Make turns slowly and gradually.
- Do not operate a machine under any conditions where traction, steering, or stability is in question.
- Remove or mark obstructions such as ditches, holes, ruts, bumps, rocks, or other hidden hazards. Tall grass can hide obstructions. Uneven terrain could overturn the machine.
- Be aware that operating the machine on wet grass, across slopes, or downhill may cause the

machine to lose traction. Loss of traction to the drive wheels may result in sliding and a loss of braking and steering.

- Use extreme caution when operating the machine near drop offs, ditches, embankments, water hazards, or other hazards. The machine could suddenly roll over if a wheel goes over the edge or the edge caves in. Establish a safety area between the machine and any hazard.

Operating the Traction Unit Hydraulics

All hydraulic machine functions are controlled by the hydraulic valve that is located at the front of the machine. The PTO must be running while the machine is in use. This is what creates the continuous fluid flow throughout the machine.

Important: **Never move a hydraulic lever rapidly between the up and down positions. Forcing a hydraulic motor to reverse directions instantly will likely severely damage it. If any part of the machine becomes plugged or material does not want to flow, shut the machine off completely and manually remove the blockage.**

Note: The hydraulic control console can be adjusted for comfort by loosening the lever on the frame behind the controls, adjusting the control console fore or aft, and tightening the lever.

Operating the Machine

1. Start the traction unit and run it at a low rpm.
2. Engage the PTO while the engine is at idle speed.
3. Increase the PTO speed to 540 rpm.

⚠ CAUTION

Shut the traction unit engine off, remove the key, and wait for all moving parts to stop before checking for fluid leaks, loose parts, and other malfunctions.

4. Before starting operation, survey the area to determine the best direction to go.
5. Drive the traction unit forward and tow the machine over the area to be cleaned.

   Note: To maintain a straight line when operating, sight off an object in the foreground.

   Always try to make a long, continuous run with a slight overlap on the return run.

After Operation

After Operation Safety

General Safety

- Keep all parts of the machine in good working condition and all hardware tightened.
- Replace all worn, damaged, or missing decals.
- Empty the machine, park on a level surface, and chock the wheels before disconnecting the machine from the traction unit.

Removing the Machine from the Traction Unit

1. Stop the traction unit on a level surface.
2. Disengage the PTO and engage the parking brake.
3. Shut off the engine and remove the key from the ignition switch.

⚠ CAUTION

Before leaving the operator's position on the traction unit, wait for the engine and all moving parts to stop.

4. Chock the wheels.
5. Remove the pin that secures the jack to the frame pin and rotate the jack down into position.
6. Secure the jack to the frame pin and adjust the jack to support the machine.

⚠ WARNING

The machine is very heavy. Do not disconnect the machine without first putting down the jack.

Personal injury could occur if the hitch drops.

7. Disconnect the safety shield chains from the traction unit or PTO shield. Secure the end of the chain to the impeller side of the PTO shaft to prevent the PTO shaft from coming apart.
8. Disconnect the PTO shaft from the traction unit output shaft.
9. Slide the PTO shaft back and remove it from the traction unit.
10. Remove the hitch pin and clevis.
11. Move the traction unit away from the machine.

Transporting the Machine

You can transport the machine to work sites using any traction unit with a draw-bar-type hitch. The machine is not designed for highway towing.

- The wide flotation turf tires are not for highway use and are only for speeds below 24 km/h (15 mph). At speeds above 24 km/h (15 mph), the tires will lose their tread, cause harm to the operator, and damage the equipment.
- Ensure that the deck is raised and the casters cannot contact the ground during transport. Also, ensure that the cylinder lock bar (Figure 8) is in place to prevent the lift cylinder from compressing during transport.

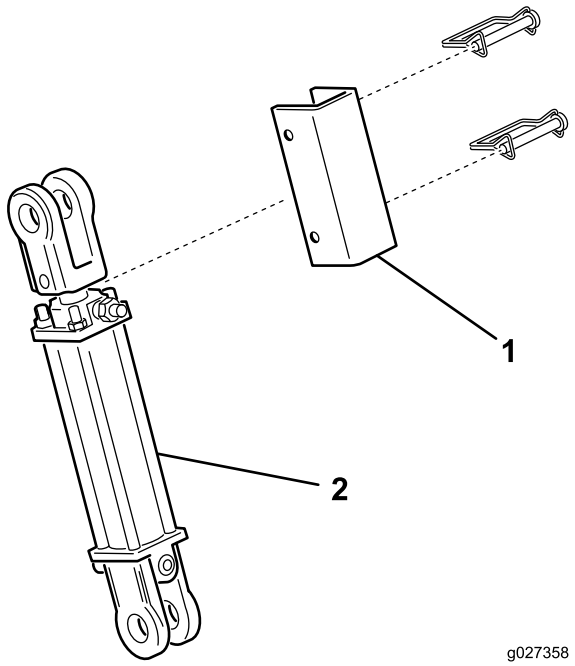

Figure 8

1. Cylinder lock bar
2. Lift cylinder

- Use adequate lighting and braking, a retainer type hitch pin, and a safety chain while towing.
- Make sure that the tires are properly inflated.

Maintenance

Recommended Maintenance Schedule(s)

Maintenance Service Interval	Maintenance Procedure
After the first 2 hours	• Torque the wheel nuts to 115 to 136 N·m (85 to 100 ft-lb).
After the first 10 hours	• Torque the wheel nuts to 115 to 136 N·m (85 to 100 ft-lb).
After the first 20 hours	• Check/adjust the impeller belt tension.
Before each use or daily	• Grease the fan shaft bearings. • Check the hydraulic lines and hoses. • Check/adjust the impeller belt tension.
Every 100 hours	• Grease the drive shaft.
Every 200 hours	• Torque the wheel nuts to 115 to 136 N·m (85 to 100 ft-lb).
Every 800 hours	• If you are not using the recommended hydraulic fluid or have ever filled the reservoir with an alternative fluid, change the hydraulic fluid and filter.
Every 1,000 hours	• If you are using the recommended hydraulic fluid, replace the hydraulic filter.
Every 2,000 hours	• If you are using the recommended hydraulic fluid, change the hydraulic fluid and filter.

Maintenance Safety

- Before adjusting, cleaning, servicing, or leaving the machine, do the following:
  - Position the machine on a level surface.
  - Disengage the PTO.
  - Ensure that the traction unit is in neutral.
  - Engage the traction unit parking brake.
  - Shut off the engine of the traction unit and remove the key.
  - Wait for all moving parts to stop.
  - Allow machine components to cool before performing maintenance.
- Perform only those maintenance instructions described in this manual. If major repairs are ever needed or assistance is desired, contact an authorized Toro distributor.
- Ensure that the machine is in safe operating condition by keeping hardware tightened.
- If possible, do not perform maintenance while the traction unit engine is running. Keep away from moving parts.
- Do not check or adjust the belt tension when the traction unit engine is running.
- Carefully release pressure from components with stored energy.
- Support the machine with blocks whenever you raise it. Do not rely on a hydraulic system to support the machine.
- Ensure that all guards are installed after maintaining or adjusting the machine.

Lubricating the Machine

Greasing the Fan Shaft Bearings

Service Interval: Before each use or daily

1. Remove the drive shield from over the pulley assemblies (Figure 12).
2. Grease the fittings on the fan shaft bearings as illustrated in Figure 10 with No. 2 lithium-based grease.

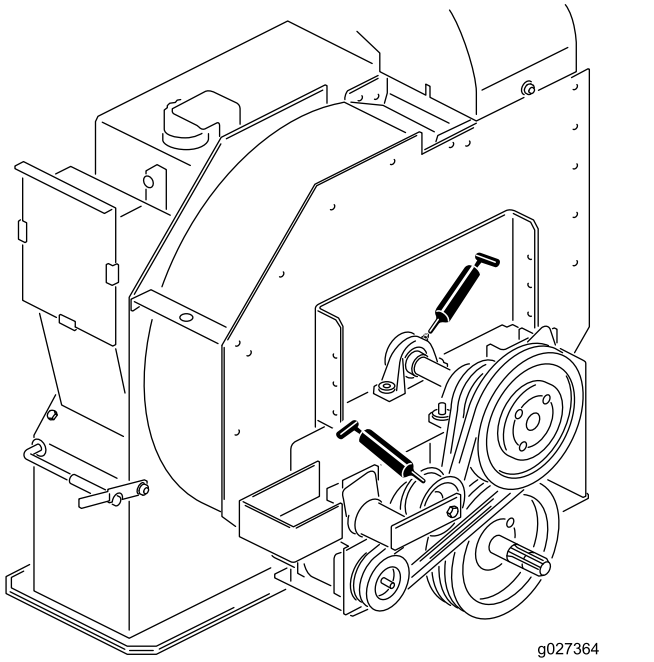

g027364

Figure 9

Greasing the Drive Shaft

Service Interval: Every 100 hours

Grease the 2 drive shaft fittings as illustrated in Figure 10 with No. 2 lithium-based grease.

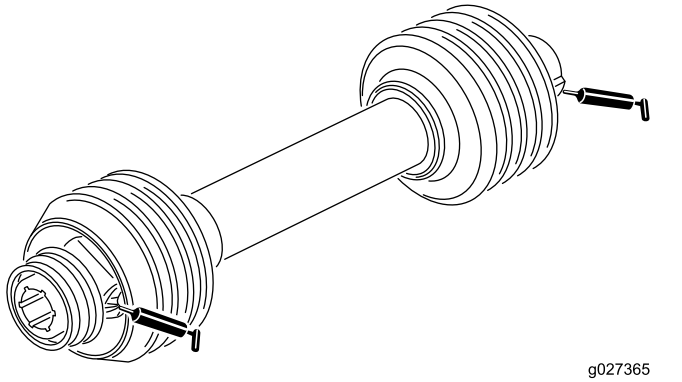

g027365

Figure 10

Hydraulic System Safety

- Seek immediate medical attention if fluid is injected into skin. Injected fluid must be surgically removed within a few hours by a doctor.
- Ensure that all hydraulic-fluid hoses and lines are in good condition and all hydraulic connections and fittings are tight before applying pressure to the hydraulic system.
- Keep your body and hands away from pinhole leaks or nozzles that eject high-pressure hydraulic fluid.
- Use cardboard or paper to find hydraulic leaks.
- Before disconnecting or performing any work on the hydraulic system, lower the implement to the ground and shut off the engine to relieve all pressure in the system.
- To ensure safe, optimal performance of the machine, use only genuine Toro replacement parts. Replacement parts made by other manufacturers could be dangerous, and such use could void the product warranty.

Checking the Hydraulic Lines and Hoses

Service Interval: Before each use or daily

Check the hydraulic lines and hoses for leaks, kinked lines, loose mounting supports, wear, loose fittings, weather, deterioration, and chemical deterioration. Make all necessary repairs before operating the machine.

⚠ WARNING

Hydraulic fluid escaping under pressure can penetrate skin and cause injury.

- **Ensure that all hydraulic fluid hoses and lines are in good condition and all hydraulic connections and fittings are tight before applying pressure to the hydraulic system.**
- **Keep body and hands away from pin-hole leaks or nozzles that eject high pressure hydraulic fluid.**
- **Use cardboard or paper to find hydraulic leaks.**
- **Safely relieve all pressure in the hydraulic system before performing any work on the hydraulic system.**
- **Seek immediate medical attention if fluid is injected into skin.**

Servicing the Hydraulic Fluid and Filter

Service Interval: Every 1,000 hours—**If you are using the recommended hydraulic fluid,** replace the hydraulic filter.

Every 2,000 hours—**If you are using the recommended hydraulic fluid,** change the hydraulic fluid and filter.

Every 800 hours—**If you are not using the recommended hydraulic fluid or have ever filled the reservoir with an alternative fluid,** change the hydraulic fluid and filter.

Changing the Hydraulic Fluid

***Important:* If the fluid becomes contaminated, contact an authorized Toro distributor. Contaminated fluid looks milky or black when compared to clean fluid.**

1. Turn the engine off.
2. Disconnect the small hydraulic hose (case drain) from the bottom of the reservoir and let the hydraulic fluid flow into a drain pan.

   Note: Install and tighten the hose when the hydraulic fluid stops draining.
3. Fill the reservoir with approximately 38 L (10 US gallons) of hydraulic fluid. Refer to Checking the Hydraulic Fluid (page 11).

   ***Important:* Use only the hydraulic fluids specified. Other fluids could damage the system.**

   To prevent over filling, do not fill if the fluid is cold. Do not over fill.
4. Install the reservoir cap.
5. Start the traction unit engine, use all the hydraulic controls to distribute the hydraulic fluid throughout the system, and check for leaks.
6. Shut off the engine
7. With the fluid warm, look into the sight gauge.

   Note: If the hydraulic fluid level is low, add enough fluid to raise the level to the middle (maximum) of the sight gauge.

Replacing the Hydraulic Filter

Use only the Toro replacement filter (Part No. 54-0110) in the hydraulic system.

***Important:* Use of any other filter may void the warranty on some components.**

1. Turn the traction unit engine off and remove the key from the ignition.

2. Clean the area around the filter mounting area.
3. Place a drain pan under the filter and remove the filter (Figure 11).

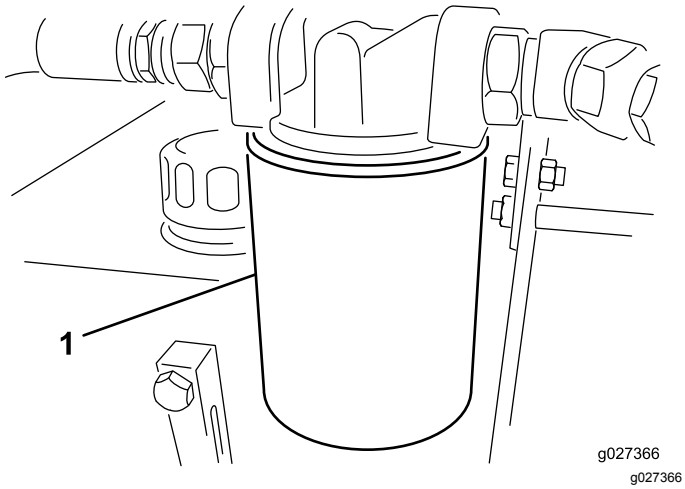

Figure 11

1. Hydraulic filter

4. Lubricate the new filter gasket and fill the filter with hydraulic fluid.
5. Ensure that the filter mounting area is clean.
6. Screw the filter on until the gasket contacts the mounting plate, then tighten the filter one–half turn.
7. Start the traction unit engine and operate the hydraulic controls to purge air from the system.
8. Shut off the engine and check the fluid level and for any leaks.

Adjusting the Impeller Belt

Service Interval: After the first 20 hours

Before each use or daily

Make sure that the belt is properly tensioned to ensure proper operation of the machine and prevent unnecessary wear.

1. Loosen the bolts and nuts securing the drive shield to the impeller housing (Figure 12) and remove the shield.

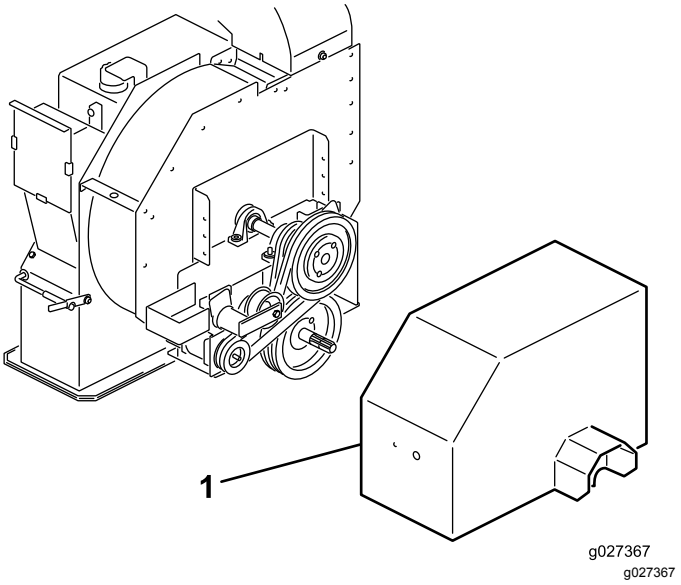

Figure 12

1. Drive shield

Note: The drive shaft does not have to be disconnected to adjust the belt.

2. On back side of the frame, loosen the bolt securing the belt tensioner to the frame (Figure 12).
3. Remove the bolt and nut securing the tensioner guide to the drive mount to release the belt tension (Figure 13).

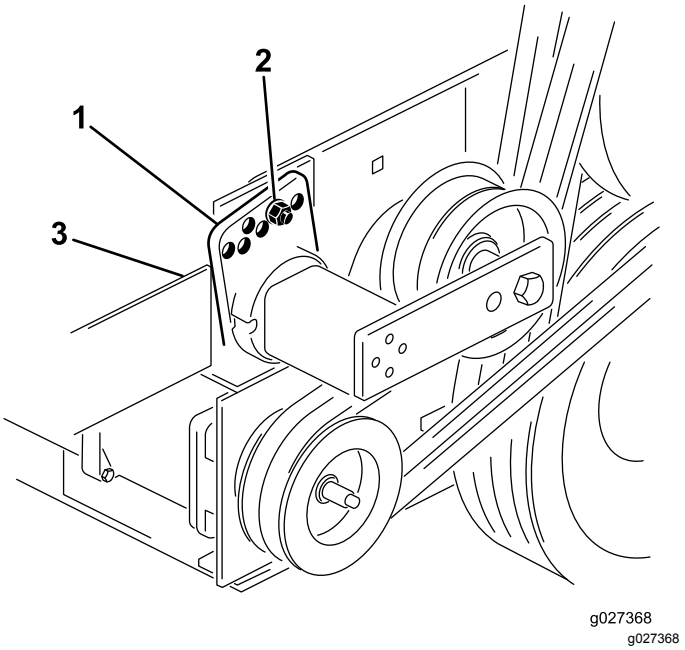

Figure 13

1. Tensioner guide
2. Bolt and nut
3. Bolt (back of frame)

4. Using a large wrench, rotate the tensioner clockwise until the decal is aligned with 15° on the tensioner tube.

   Important: **Align the tensioner as close to 15° as possible without going under.**

   Rotating the tensioner too far over 15° can overtension the belt, rotating it under 15° will leave the belt too loose; both can damage the machine.

5. Insert the bolt into the aligned guide holes and secure it with the nut.

   Important: **If the holes are not exactly aligned, rotate the guide to the next higher hole until it is aligned.**

6. Tighten the bolt on the back side of the frame to lock the tensioner.
7. Install the drive shield to the impeller housing with the bolts and nuts removed previously.

Storage

1. Thoroughly clean the machine. The impeller housing should be free of dirt, leaves, and debris.
2. Check the tire pressure; refer to Checking the Tire Pressure (page 11).
3. Tighten all fasteners as necessary.
4. Grease or oil all grease fittings and pivot points. Wipe up any excess lubricant.
5. Place a light coat of grease on the splines of the PTO shaft.
6. Lightly sand and use touch-up paint on painted areas that are scratched, chipped, or rusted. Repair any dents in the metal body.

EEA/UK Privacy Notice

Toro's Use of Your Personal Information

The Toro Company ("Toro") respects your privacy. When you purchase our products, we may collect certain personal information about you, either directly from you or through your local Toro company or dealer. Toro uses this information to fulfil contractual obligations - such as to register your warranty, process your warranty claim or to contact you in the event of a product recall - and for legitimate business purposes - such as to gauge customer satisfaction, improve our products or provide you with product information which may be of interest. Toro may share your information with our subsidiaries, affiliates, dealers or other business partners in connection these activities. We may also disclose personal information when required by law or in connection with the sale, purchase or merger of a business. We will never sell your personal information to any other company for marketing purposes.

Retention of your Personal Information

Toro will keep your personal information as long as it is relevant for the above purposes and in accordance with legal requirements. For more information about applicable retention periods please contact legal@toro.com.

Toro's Commitment to Security

Your personal information may be processed in the US or another country which may have less strict data protection laws than your country of residence. Whenever we transfer your information outside of your country of residence, we will take legally required steps to ensure that appropriate safeguards are in place to protect your information and to make sure it is treated securely.

Access and Correction

You may have the right to correct or review your personal data, or object to or restrict the processing of your data. To do so, please contact us by email at legal@toro.com. If you have concerns about the way in which Toro has handled your information, we encourage you to raise this directly with us. Please note that European residents have the right to complain to your Data Protection Authority.

California Proposition 65 Warning Information

What is this warning?

You may see a product for sale that has a warning label like the following:



WARNING: Cancer and Reproductive Harm—www.p65Warnings.ca.gov.

What is Prop 65?

Prop 65 applies to any company operating in California, selling products in California, or manufacturing products that may be sold in or brought into California. It mandates that the Governor of California maintain and publish a list of chemicals known to cause cancer, birth defects, and/or other reproductive harm. The list, which is updated annually, includes hundreds of chemicals found in many everyday items. The purpose of Prop 65 is to inform the public about exposure to these chemicals.

Prop 65 does not ban the sale of products containing these chemicals but instead requires warnings on any product, product packaging, or literature with the product. Moreover, a Prop 65 warning does not mean that a product is in violation of any product safety standards or requirements. In fact, the California government has clarified that a Prop 65 warning "is not the same as a regulatory decision that a product is 'safe' or 'unsafe.'" Many of these chemicals have been used in everyday products for years without documented harm. For more information, go to https://oag.ca.gov/prop65/faqs-view-all.

A Prop 65 warning means that a company has either (1) evaluated the exposure and has concluded that it exceeds the "no significant risk level"; or (2) has chosen to provide a warning based on its understanding about the presence of a listed chemical without attempting to evaluate the exposure.

Does this law apply everywhere?

Prop 65 warnings are required under California law only. These warnings are seen throughout California in a wide range of settings, including but not limited to restaurants, grocery stores, hotels, schools, and hospitals, and on a wide variety of products. Additionally, some online and mail order retailers provide Prop 65 warnings on their websites or in catalogs.

How do the California warnings compare to federal limits?

Prop 65 standards are often more stringent than federal and international standards. There are various substances that require a Prop 65 warning at levels that are far lower than federal action limits. For example, the Prop 65 standard for warnings for lead is 0.5 µg/day, which is well below the federal and international standards.

Why don't all similar products carry the warning?

- Products sold in California require Prop 65 labelling while similar products sold elsewhere do not.
- A company involved in a Prop 65 lawsuit reaching a settlement may be required to use Prop 65 warnings for its products, but other companies making similar products may have no such requirement.
- The enforcement of Prop 65 is inconsistent.
- Companies may elect not to provide warnings because they conclude that they are not required to do so under Prop 65; a lack of warnings for a product does not mean that the product is free of listed chemicals at similar levels.

Why does Toro include this warning?

Toro has chosen to provide consumers with as much information as possible so that they can make informed decisions about the products they buy and use. Toro provides warnings in certain cases based on its knowledge of the presence of one or more listed chemicals without evaluating the level of exposure, as not all the listed chemicals provide exposure limit requirements. While the exposure from Toro products may be negligible or well within the "no significant risk" range, out of an abundance of caution, Toro has elected to provide the Prop 65 warnings. Moreover, if Toro does not provide these warnings, it could be sued by the State of California or by private parties seeking to enforce Prop 65 and subject to substantial penalties.

The Toro Warranty

A Two-Year Limited Warranty

Conditions and Products Covered

The Toro Company and its affiliate, Toro Warranty Company, pursuant to an agreement between them, jointly warrant your Toro Commercial product ("Product") to be free from defects in materials or workmanship for two years or 1500 operational hours*, whichever occurs first. This warranty is applicable to all products with the exception of Aerators (refer to separate warranty statements for these products). Where a warrantable condition exists, we will repair the Product at no cost to you including diagnostics, labor, parts, and transportation. This warranty begins on the date the Product is delivered to the original retail purchaser.
* Product equipped with an hour meter.

Instructions for Obtaining Warranty Service

You are responsible for notifying the Commercial Products Distributor or Authorized Commercial Products Dealer from whom you purchased the Product as soon as you believe a warrantable condition exists. If you need help locating a Commercial Products Distributor or Authorized Dealer, or if you have questions regarding your warranty rights or responsibilities, you may contact us at:

Toro Commercial Products Service Department
Toro Warranty Company
8111 Lyndale Avenue South
Bloomington, MN 55420-1196

952–888–8801 or 800–952–2740
E-mail: commercial.warranty@toro.com

Owner Responsibilities

As the Product owner, you are responsible for required maintenance and adjustments stated in your *Operator's Manual*. Failure to perform required maintenance and adjustments can be grounds for disallowing a warranty claim.

Items and Conditions Not Covered

Not all product failures or malfunctions that occur during the warranty period are defects in materials or workmanship. This warranty does not cover the following:

- Product failures which result from the use of non-Toro replacement parts, or from installation and use of add-on, or modified non-Toro branded accessories and products. A separate warranty may be provided by the manufacturer of these items.
- Product failures which result from failure to perform recommended maintenance and/or adjustments. Failure to properly maintain your Toro product per the Recommended Maintenance listed in the *Operator's Manual* can result in claims for warranty being denied.
- Product failures which result from operating the Product in an abusive, negligent, or reckless manner.
- Parts subject to consumption through use unless found to be defective. Examples of parts which are consumed, or used up, during normal Product operation include, but are not limited to, brake pads and linings, clutch linings, blades, reels, rollers and bearings (sealed or greasable), bed knives, spark plugs, castor wheels and bearings, tires, filters, belts, and certain sprayer components such as diaphragms, nozzles, and check valves, etc.
- Failures caused by outside influence. Conditions considered to be outside influence include, but are not limited to, weather, storage practices, contamination, use of unapproved fuels, coolants, lubricants, additives, fertilizers, water, or chemicals, etc.
- Failure or performance issues due to the use of fuels (e.g. gasoline, diesel, or biodiesel) that do not conform to their respective industry standards.
- Normal noise, vibration, wear and tear, and deterioration.
- Normal "wear and tear" includes, but is not limited to, damage to seats due to wear or abrasion, worn painted surfaces, scratched decals or windows, etc.

Parts

Parts scheduled for replacement as required maintenance are warranted for the period of time up to the scheduled replacement time for that part. Parts replaced under this warranty are covered for the duration of the original product warranty and become the property of Toro. Toro will make the final decision whether to repair any existing part or assembly or replace it. Toro may use remanufactured parts for warranty repairs.

Deep Cycle and Lithium-Ion Battery Warranty:

Deep cycle and Lithium-Ion batteries have a specified total number of kilowatt-hours they can deliver during their lifetime. Operating, recharging, and maintenance techniques can extend or reduce total battery life. As the batteries in this product are consumed, the amount of useful work between charging intervals will slowly decrease until the battery is completely worn out. Replacement of worn out batteries, due to normal consumption, is the responsibility of the product owner. Battery replacement may be required during the normal product warranty period at owner's expense. Note: (Lithium-Ion battery only): A Lithium-Ion battery has a part only prorated warranty beginning year 3 through year 5 based on the time in service and kilowatt hours used. Refer to the *Operator's Manual* for additional information.

Maintenance is at Owner's Expense

Engine tune-up, lubrication, cleaning and polishing, replacement of filters, coolant, and completing recommended maintenance are some of the normal services Toro products require that are at the owner's expense.

General Conditions

Repair by an Authorized Toro Distributor or Dealer is your sole remedy under this warranty.

Neither The Toro Company nor Toro Warranty Company is liable for indirect, incidental or consequential damages in connection with the use of the Toro Products covered by this warranty, including any cost or expense of providing substitute equipment or service during reasonable periods of malfunction or non-use pending completion of repairs under this warranty. Except for the Emissions warranty referenced below, if applicable, there is no other express warranty. All implied warranties of merchantability and fitness for use are limited to the duration of this express warranty.

Some states do not allow exclusions of incidental or consequential damages, or limitations on how long an implied warranty lasts, so the above exclusions and limitations may not apply to you. This warranty gives you specific legal rights, and you may also have other rights which vary from state to state.

Note regarding engine warranty:

The Emissions Control System on your Product may be covered by a separate warranty meeting requirements established by the U.S. Environmental Protection Agency (EPA) and/or the California Air Resources Board (CARB). The hour limitations set forth above do not apply to the Emissions Control System Warranty. Refer to the Engine Emission Control Warranty Statement supplied with your product or contained in the engine manufacturer's documentation for details

Countries Other than the United States or Canada

Customers who have purchased Toro products exported from the United States or Canada should contact their Toro Distributor (Dealer) to obtain guarantee policies for your country, province, or state. If for any reason you are dissatisfied with your Distributor's service or have difficulty obtaining guarantee information, contact the Toro importer.

374-0253 Rev D



Count on it.