Form No. 3395-363 Rev C

TORO®

Count on it.

Parts Catalog

TX 1000 Compact Utility Loader

Model No. 22327—Serial No. 315000001 and Up

Model No. 22327G—Serial No. 315000001 and Up

Register at www.Toro.com.
Original Instructions (EN)

3395-363 C

Ordering Replacement Parts

To order replacement parts, please supply the part number, the quantity, and the description of each part desired.

Understanding Reference Numbers

Each identified part in an illustration has a reference number. The reference number for a part also appears in the parts list, along with other information about the part.

This catalog uses two special reference number formats, one to indicate parts in a service assembly and another to indicate the quantity of a given part in an illustration.

Service Assembly Reference Numbers

Parts in service assemblies have reference numbers in the form a:b. The a represents the reference number of the entire service assembly and the b represents a sequential number unique to each part within the service assembly.

For example, a wheel assembly might be identified by reference number 6, the tire by 6:1, the valve by 6:2, and the wheel by 6:3. When you order the assembly identified by reference number 6, you receive all parts identified by reference numbers 6:1,6:2, and 6:3. However, you may also order any part individually. Reference numbers of this type appear in illustration and in parts lists.

Reference Numbers Indicating Quantity

In an illustration, if a reference number indicates more than one part, the reference number has the form nX y. The n represents the quantity of the part, the X is the multiplication symbol, and the y represents the reference number.

For example, in an illustration, the reference number 2X 37 means that two of the parts identified by reference number 37 are indicated.

Contents

Frame, Fuel Tank and Cover Assembly . . . 6
LH Fuel Tank Assembly No. 130-1026 . . . 8
RH Fuel Tank Assembly No. 130-1027 . . . 10
Hydraulic Tank and Track Shaft Assembly . . . 12
Track Assembly, Lug-Driven . . . 14
Hydraulic Motor Assembly No. 130-7729 . . . 16
Track Assembly, Sprocket-Driven, LH No. 138-0794 . . . 18
Hydraulic Motor Assembly No. 138-0761 . . . 20
Track Assembly, Sprocket-Driven, RH No. 138-0795 . . . 22
Hydraulic Motor Assembly No. 138-0778 . . . 24
Brake Assembly . . . 26
Front Tower Assembly . . . 28
Hydraulic Hose Assembly . . . 30
Radiator and Air Cleaner Assembly . . . 32
Air Cleaner Assembly No. 93-2190 . . . 34
Engine Mount and Muffler Assembly . . . 36
Tandem Pump and Gear Pump Assembly . . . 38
Gear Pump Assembly No. 130-7731 . . . 40
Control Valve and Reference Bar Assembly . . . 42
Control Valve Assembly No. 125-3704 . . . 44
2-Spool Valve and Auxiliary Valve Assembly . . . 46
2-Spool Valve Assembly No. 130-7710 . . . 48
Auxiliary Valve Assembly No. 130-7562 . . . 50
Loader Arm Assembly . . . 52
Hydraulic Cylinder Assembly No. 130-5176 . . . 54
Hydraulic Cylinder Assembly No. 130-5175 . . . 56
Hydraulic Cylinder Assembly No. 130-5195 . . . 58
Loader Hydraulic Assembly . . . 60
Quick Attach Assembly . . . 62
Front Cover and Side Panel Assembly . . . 64
Hood Assembly . . . 66
Manual Tube Assembly . . . 68
Platform and Cushion Assembly . . . 70
Electrical Assembly . . . 72
Crankcase Assembly . . . 74
Oil Pan Assembly . . . 75
Cylinder Head Assembly . . . 76
Gear Case Assembly . . . 77
Cylinder Head Cover Assembly . . . 78
Dipstick and Guide Assembly . . . 79
Main Bearing Case Assembly . . . 80
Camshaft and Idle Gear Shaft Assembly . . . 81
Piston and Crankshaft Assembly . . . 82
Flywheel Assembly . . . 83
Fuel Camshaft and Governor Shaft Assembly . . . 84
Idle Apparatus Assembly . . . 85
Stop Solenoid Assembly . . . 86
Injection Pump Assembly . . . 87
Governor Assembly . . . 88
Speed Control Plate Assembly . . . 89
Nozzle Holder and Glow Plug Assembly . . . 90
Nozzle Holder Assembly . . . 91
Alternator and Pulley Assembly . . . 92
Alternator Components Assembly . . . 93

© 2019—The Toro® Company
8111 Lyndale Avenue South
Bloomington, MN 55420

Contact us at www.Toro.com.
Printed in the USA.
All Rights Reserved

Contents (continued)

Starter Installation Assembly 94
Starter Component Assembly 95
Water Flange and Thermostat Assembly 96
Water Pump Assembly 97
Valve and Rocker Arm Assembly 98
Inlet and Exhaust Manifold Assembly 99
Accessories and Service Parts 100
Upper Gasket Kit 101
Lower Gasket Kit 102
Attachments and Accessories 103

Frame, Fuel Tank and Cover Assembly

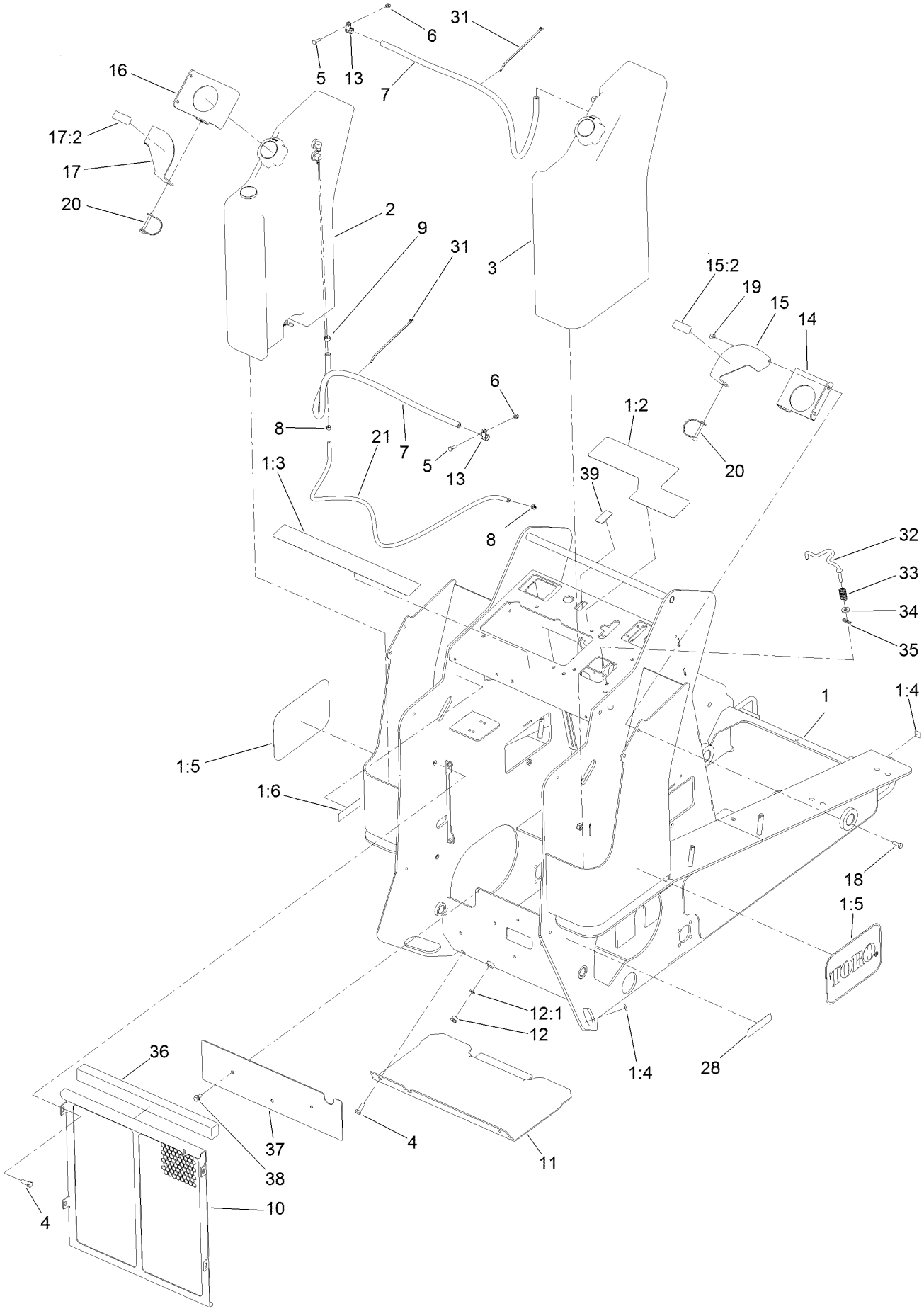

Frame, Fuel Tank and Cover Assembly (continued)

Ref.	Part Number	Qty.	Description
1	130-5314	1	Frame
1:2	131-0707	1	Decal-Control Panel
1:3	131-0710	1	Decal-Safety
1:4	93-9084	4	Decal-Point, Lift
1:5	66-6140	2	Decal
1:6	115-4865	1	Decal-Fill, Radiator
2	130-1026	1	LH Fuel Tank ASM
3	130-1027	1	RH Fuel Tank ASM
4	323-6	6	Screw-HH
5	321-5	2	Screw-HH
6	3296-42	2	Nut-Lock, NI
7	110-6186	2	Hose-Fuel
8	2412-80	2	Clamp-Hose
9	92-2379	2	Clamp-Hose
10	130-0964-03	1	Radiator Cover ASM
11	130-0995-01	1	Cover-Bottom
12	353-989	1	Plug-Hex, Hollow
12:1	237-42	1	O-Ring
13	2412-134	2	Clamp-R
14	130-1104-03	1	Plate-Hold Down, RH
15	130-5317	1	Plate-Lock, Fuel Cap, RH
15:2	93-6680	1	Decal-Diesel
16	130-1134-03	1	Plate-Hold Down, LH
17	130-5316	1	Plate-Lock, Fuel Cap, LH
17:2	93-6680	1	Decal-Diesel
18	322-4	4	Screw-HH
19	3296-29	4	Nut-Lock, NI
20	100-1663	2	Pin-Hitch
21	130-7714	1	Hose-Fuel
28	117-2718	1	Decal-Arrester, Spark
31	3290-378	2	Tie-Cable
32	131-0713	1	Rod-Interlock
33	85-6750	1	Spring-Control
34	88-7200	1	Washer-Flat
35	3290-307	1	Pin-Cotter
36	131-9175	1	Seal-Foam
37	131-9209-01	1	Plate-Cover
38	32144-14	3	Screw-HWHTF
39	AU382892A1	1	Blank-Switch, Rocker

LH Fuel Tank Assembly No. 130-1026

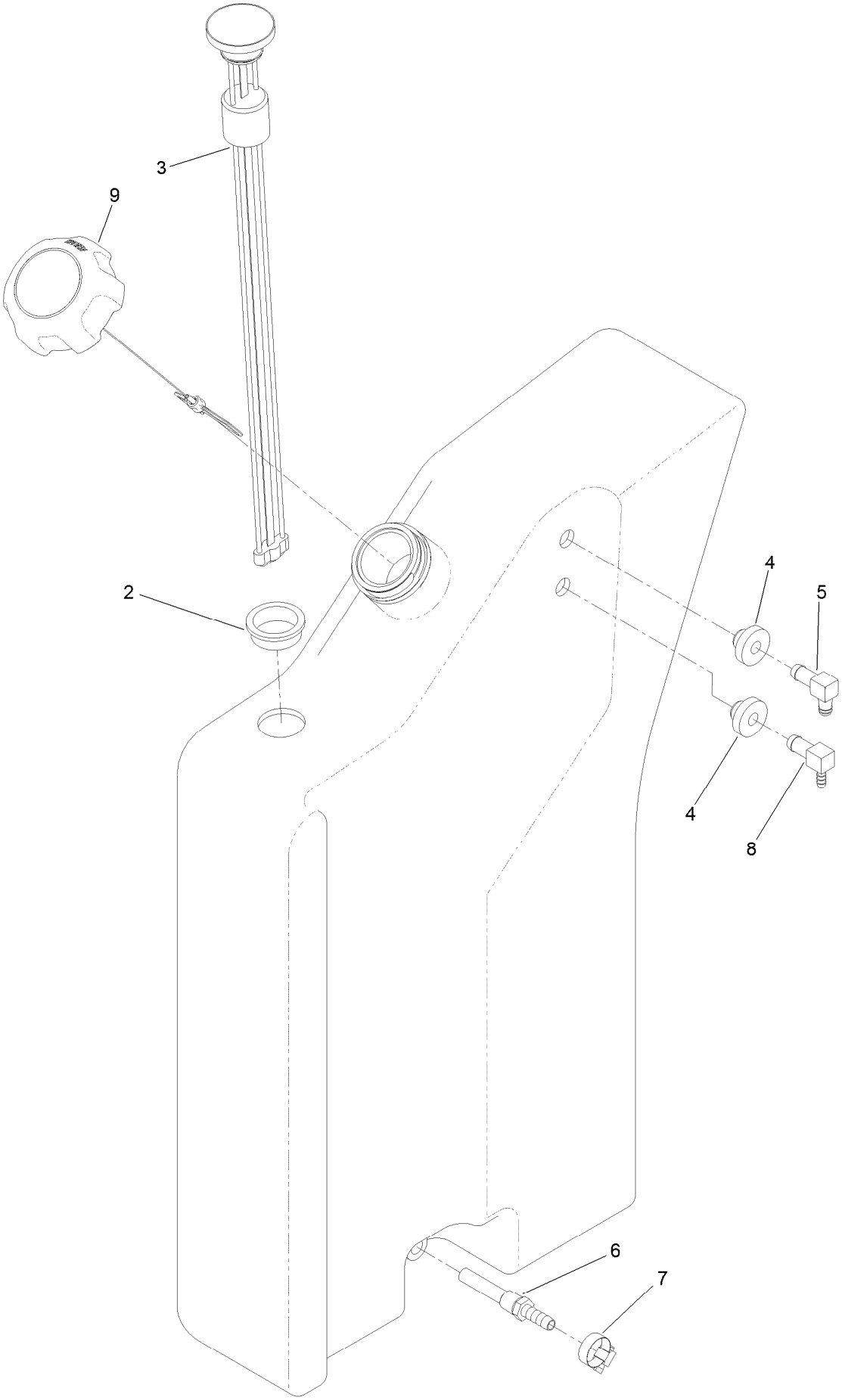

LH Fuel Tank Assembly No. 130-1026 (continued)

Ref.	Part Number	Qty.	Description
2	95-8972	1	Grommet
3	104-5603	1	Gauge-Level, Fuel
4	46-6560	2	Bushing
5	1-643259	1	Fitting-Elbow
6	112-6374	1	Fitting-Strainer
7	2412-36	1	Clamp-Hose
8	104-5228	1	Fitting-Elbow, 90 DEG
9	130-7567	1	Cap-Diesel,

RH Fuel Tank Assembly No. 130-1027

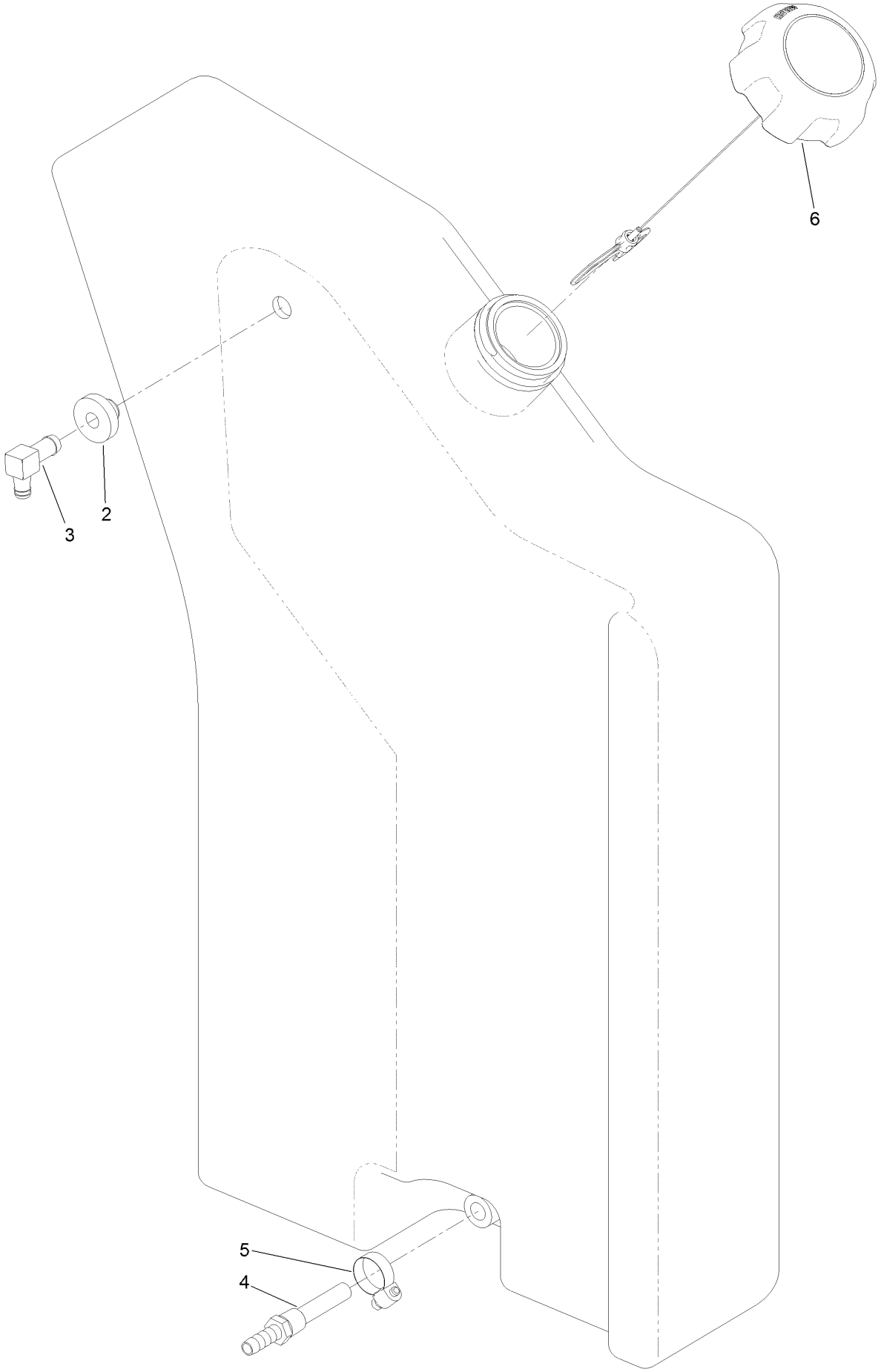

RH Fuel Tank Assembly No. 130-1027 (continued)

Ref.	Part Number	Qty.	Description
2	46-6560	1	Bushing
3	1-643259	1	Fitting-Elbow
4	112-6374	1	Fitting-Strainer
5	2412-36	1	Clamp-Hose
6	130-7567	1	Cap-Diesel,

Hydraulic Tank and Track Shaft Assembly

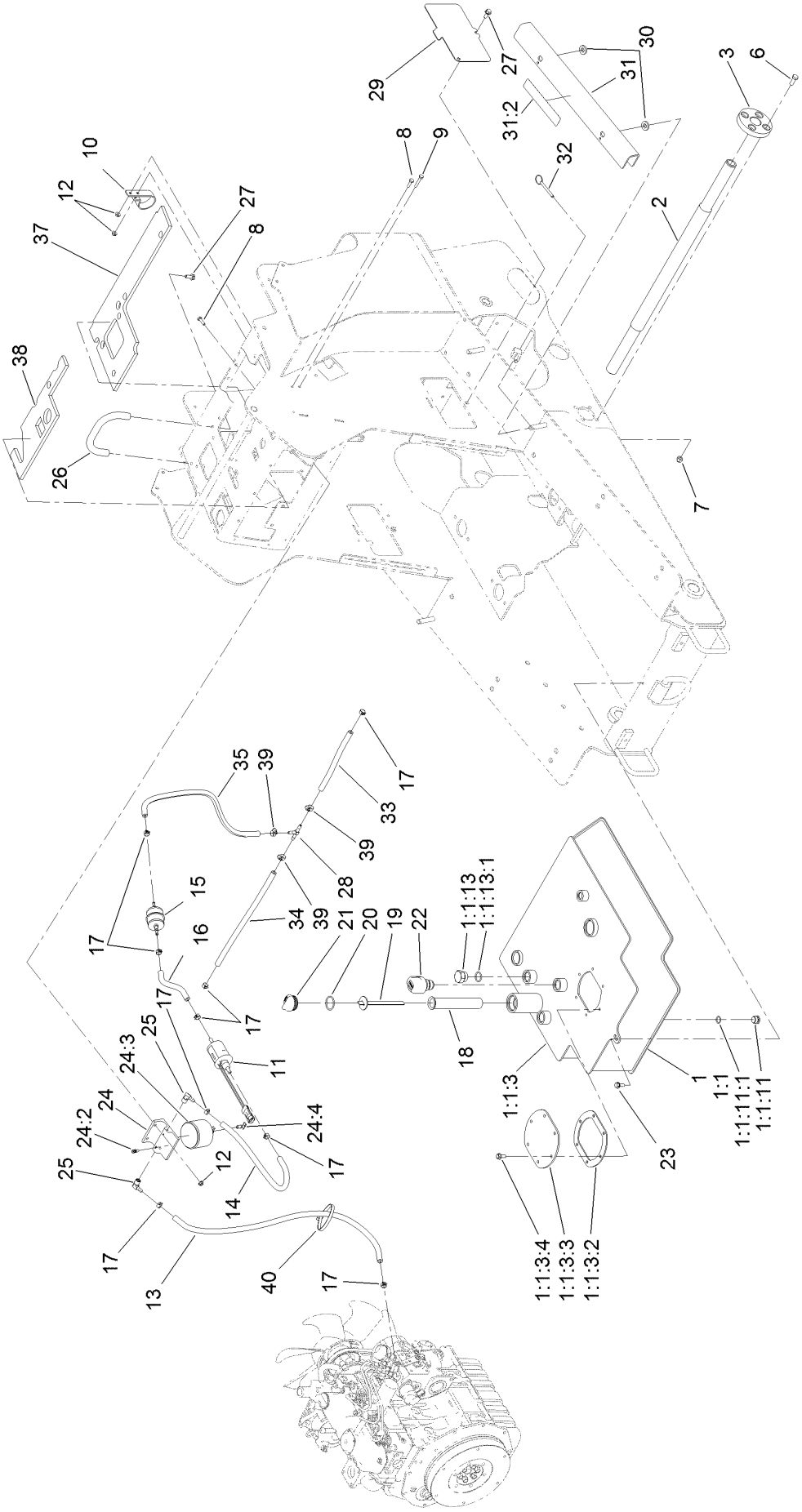

Hydraulic Tank and Track Shaft Assembly (continued)

Ref.	Part Number	Qty.	Description
1	125-0404-03	1	HYD Tank ASM
1:1		1	Tank-HYD ●
1:1:3		1	Tank Top ASM ●
1:1:3:2	107-3557	1	Gasket-Cover, Access
1:1:3:3	108-6297	1	Cover-Tank
1:1:3:4	98-9940	6	Screw-HHF
1:1:11	353-988	1	Plug-Hex
1:1:11:1	237-79	1	O-Ring
1:1:13	354-74	1	Plug-HH
1:1:13:1	237-81	1	O-Ring
2	125-0425	1	Shaft-Track
3	125-0339	2	Hub-Shaft
6	323-6	8	Screw-HH
7	3296-39	8	Nut-Lock, NI
8	321-5	3	Screw-HH
9	321-9	1	Screw-HH
10	110-8817	1	Bracket-Pump, Fuel
11	110-8806	1	Pump-Fuel
12	32128-33	4	Nut-HF
13	110-6186	1	Hose-Fuel
14	114-4028	1	Hose-Fuel
15	112-7836	1	Filter-Inline
16	108-3280	1	Hose-Fuel
17	92-2379	9	Clamp-Hose
18	61-2790	1	Filter-Screen
19	130-7686	1	Dipstick
20	237-123	1	O-Ring
21	93-7498	1	Plug-Plastic
22	115-9793	1	Breather
23	32144-11	1	Screw-Thd Roll, HWH
24	109-2678	1	Filter Head ASM
24:2	63-8290	1	Vent-Air
24:3	109-3117	1	Filter-Separator, Water
24:4	63-8310	1	Valve-Drain
25	353-781	2	Fitting-HYD, 90
26	112-2620	1	Bar-Reference
27	3234-5	4	Screw-HHF
28	99-5005	1	Fitting-Tee, Barbed
29	130-1036-01	2	Plate-Cover, Access
30	83-1470	4	Washer-Neoprene
31	130-5315	2	Arm-Locking
31:2	115-4858	1	Decal-Danger
32	108-0094	4	Pin-Cotterless
33	110-4107	1	Hose-Fuel
34	110-4101	1	Hose-Fuel
35	108-3284	1	Hose-Fuel
37	132-8416	1	Foam-Heat Shield
38	132-8417	1	Foam-Heat Shield
39	2412-108	3	Clamp-Worm
40	3334-945	1	Tie-Cable

● Not serviced separately

Track Assembly, Lug-Driven

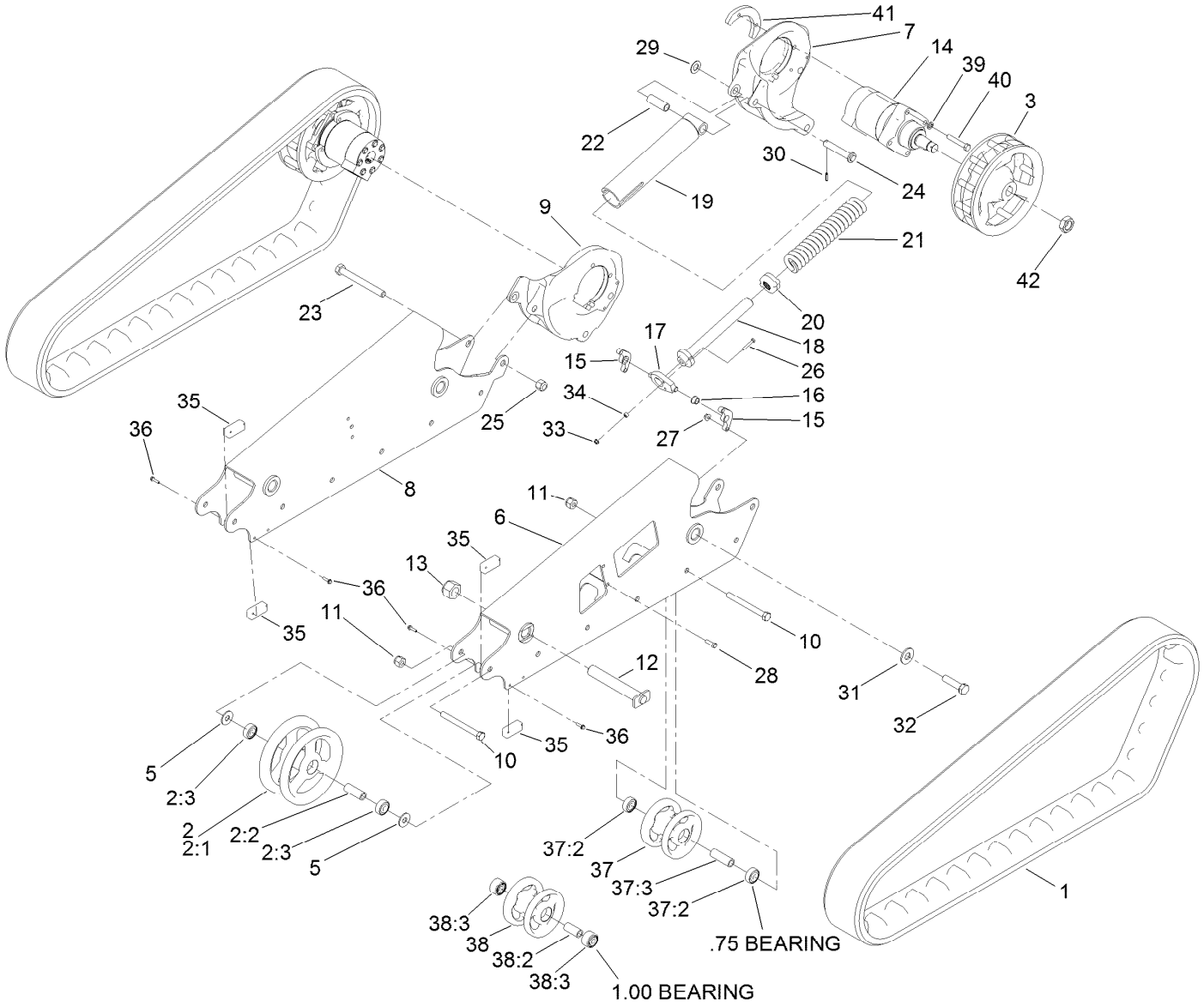

Track Assembly, Lug-Driven (continued)

Ref.	Part Number	Qty.	Description
1	121-4592	2	Track-Narrow
2	104-5745	2	Tensioner Wheel ASM
2:1	104-5747-03	1	Wheel-Tensioner
2:2	98-9835	1	Spacer-Wheel, Tensioner
2:3	120-5378	2	Bearing-Ball
3	133-0215-03	2	Wheel-Drive
5	3256-7	4	Washer-Flat
6	125-0420-01	1	Mount-Narrow Wheel, LH
7	127-9593-03	1	Mount-Wheel, LH
8	125-0440-01	1	Mount-Narrow Wheel, RH
9	127-9594-03	1	Mount-Wheel, RH
10	327-17	12	Screw-HH
11	3296-24	12	Nut-Hex
12	130-0967	2	Pin-Track
13	125-0399	2	Nut-HH
14	130-7729	2	Motor-HYD
15	127-9566-03	4	Plate-Mount, Pivot
16	65-8770	4	Bushing-Bellcrank
17	127-9616	2	Tensioner-Pivot Joint
18	127-9563	2	Bolt-Tensioner
19	127-9559-03	2	Pivot-Tensioner
20	108-4664	2	Block-Tensioner
21	95-3624	2	Spring-Compression
22	127-9565	2	Spacer-Pivot
23	328-23	2	Screw-HH
24	130-1057	2	Pin-Tensioner
25	120-7252	2	Nut-Lock
26	321-10	2	Screw-HH
27	104-8301	8	Nut-HF, NI
28	323-7	8	Screw-HH
29	3256-39	2	Washer-Flat
30	32121-24	2	Pin-Spring
31	99-2659	2	Washer
32	328-25	2	Screw-HH
33	32128-32	2	Nut-HHF
34	98-4799	2	Spacer
35	131-9241	4	Block-Track
36	120-4654	8	Screw-HHF
37	138-5231	10	Road Wheel ASM (.75W Bearing)
37:2	138-0547	2	Bearing-Ball (.75W)
37:3	130-7564	1	Spacer-Wheel
38	138-1368	10	Road Wheel ASM (1.00W Bearing)
38:2	138-1367	1	Spacer-Wheel, Road
38:3	138-1369	2	Bearing-Ball (1.00W)
39	3253-7	8	Washer-Lock
40	115-4845	8	Screw-HH, TAP
41	127-9567-03	4	Plate-Mounting
42	107-9319	2	Nut-Hex

Hydraulic Motor Assembly No. 130-7729

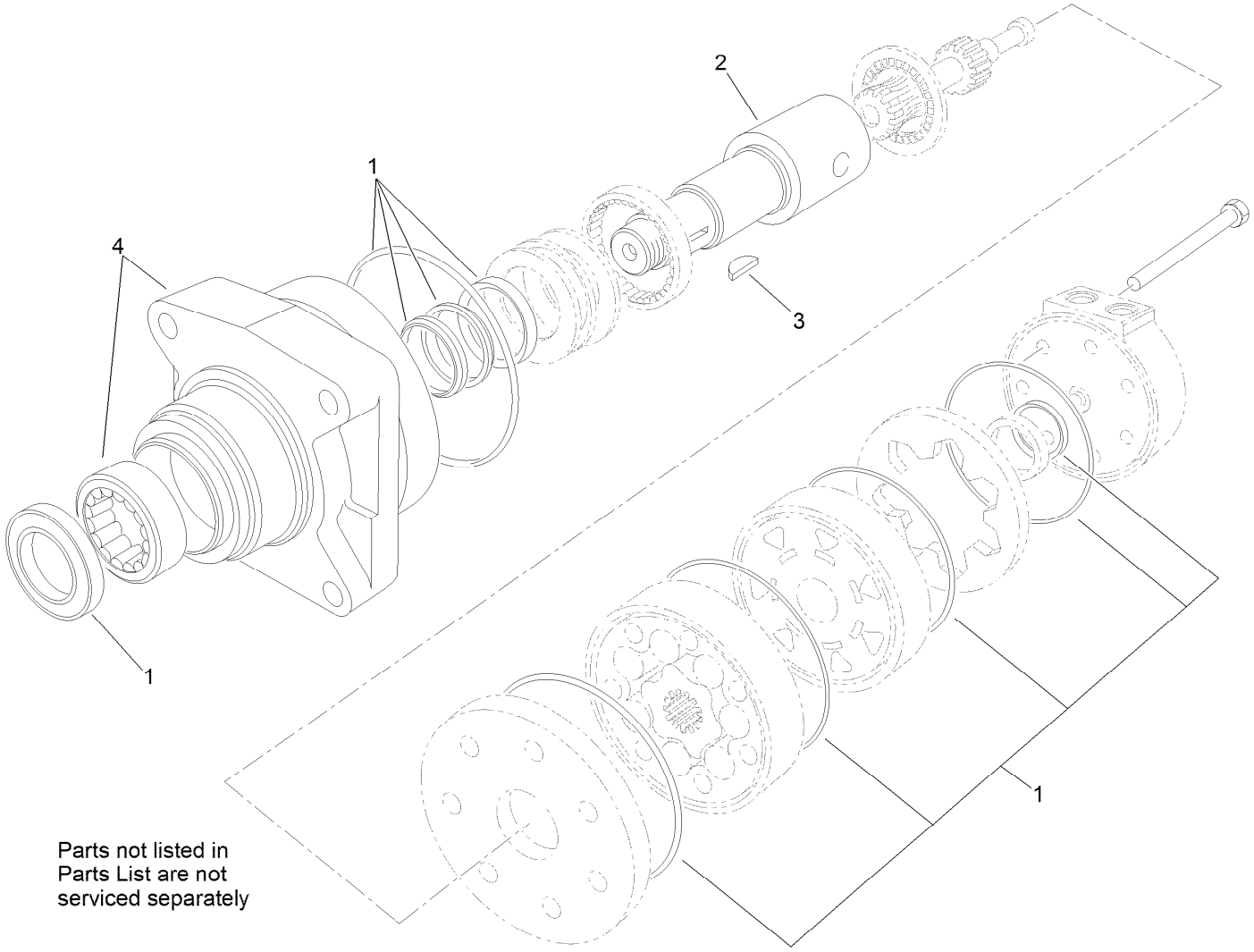

Parts not listed in
Parts List are not
serviced separately

Hydraulic Motor Assembly No. 130-7729 (continued)

Ref.	Part Number	Qty.	Description
1	100-6131	1	Seal Kit
2	106-7645	1	Coupling-Shaft
3	3257-42	1	Key-Woodruff
4	108-5634	1	Motor Housing ASM

Track Assembly, Sprocket-Driven, LH No. 138-0794

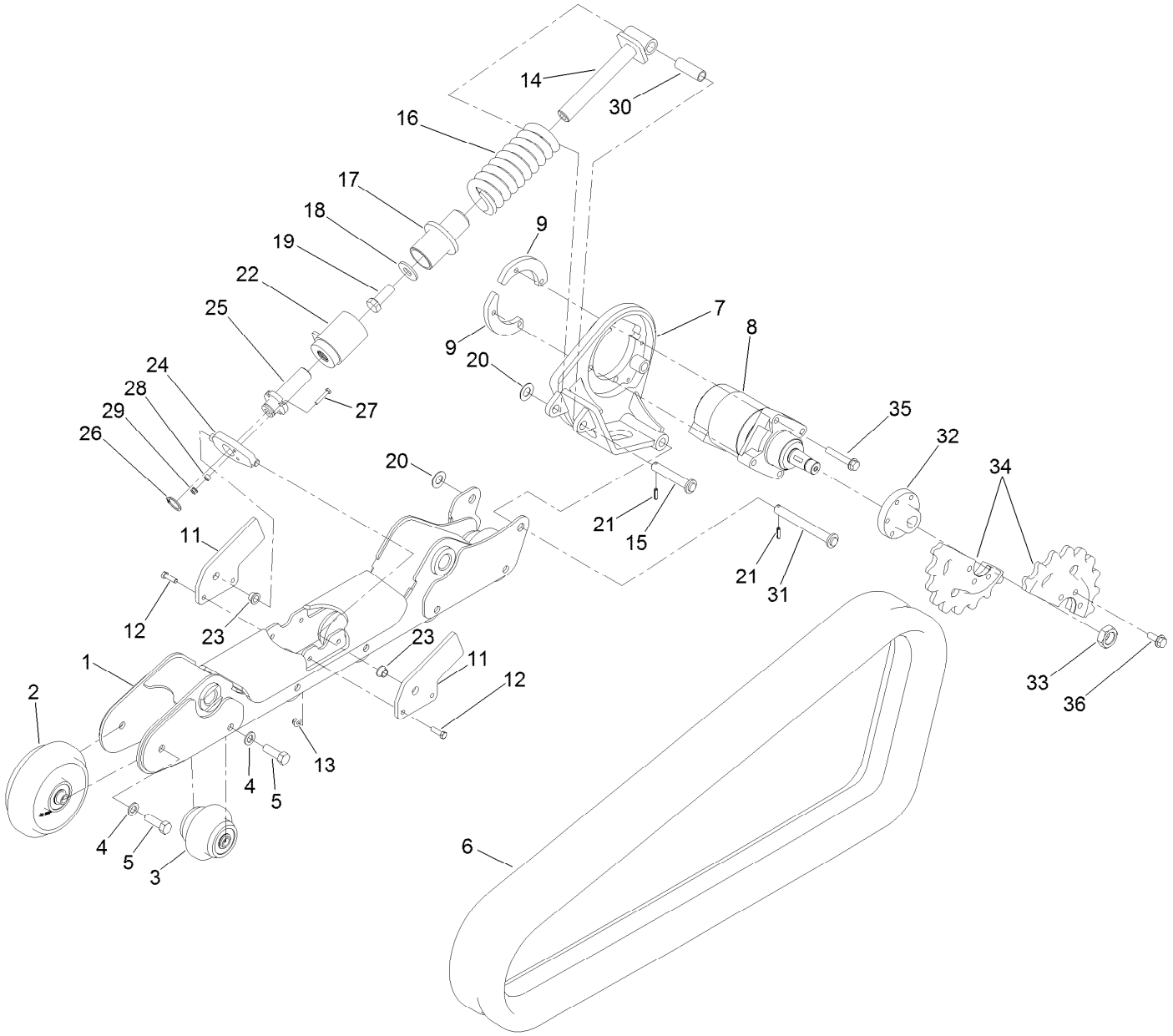

Track Assembly, Sprocket-Driven, LH No. 138-0794 (continued)

Ref.	Part Number	Qty.	Description
1	138-4658	1	Frame-Track, LH
2	137-8807	1	Tensioner Wheel ASM
3	137-8808	5	Road Wheel ASM, Cassette Seal
4	33098-00	12	Washer-Flat
5	111-3484	12	Screw-HH
6	138-0186	1	Track-Narrow
7	137-4618	1	Mount-Motor, LH
8	138-0761	1	Motor-HYD
9	137-4614	2	Plate-Mounting, Wheelmotor
11	137-4632	2	Plate-Ear, Inside
12	323-7	4	Screw-HH
13	104-8301	4	Nut-HF, NI
14	138-0238	1	Tensioner-Spring
15	130-1057	1	Pin-Tensioner
16	138-0237	1	Spring-Compression
17	138-0248	1	Guide-Tensioner
18	99-2659	1	Washer
19	AU426-1232	1	Bolt
20	3256-39	2	Washer-Flat
21	32121-24	2	Pin-Spring
22	138-0242	1	Housing-Tensioner
23	65-8770	2	Bushing-Bellcrank
24	138-4681	1	Plate-Pivot
25	138-0247	1	Screw-Tensioner
26	32151-77	1	Ring-Retaining, External
27	321-9	1	Screw-HH
28	98-4799	1	Spacer
29	32128-32	1	Nut-HHF
30	127-9565	1	Spacer-Pivot
31	137-4518	1	Pin-Pivot
32	137-4645	1	Hub-Sprocket
33	107-9319	1	Nut-Hex
34	137-4643	2	Sprocket-18 Tooth
35	3234-40	4	Screw-HF
36	137-4653	6	Screw-HHF

Hydraulic Motor Assembly No. 138-0761

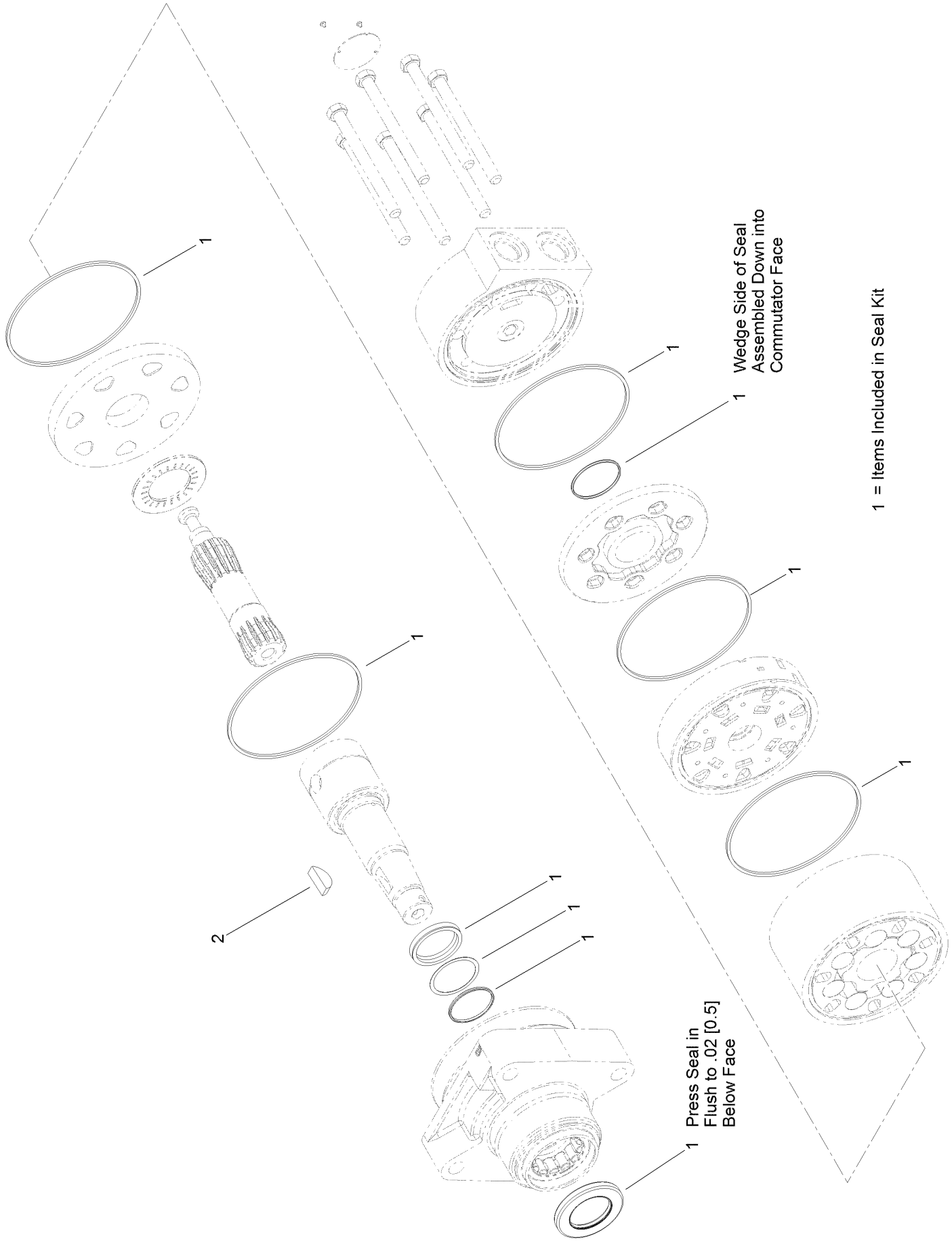

Hydraulic Motor Assembly No. 138-0761 (continued)

Ref.	Part Number	Qty.	Description
1	137-1824	1	Seal Kit
2	3257-42	1	Key-Woodruff

Track Assembly, Sprocket-Driven, RH No. 138-0795

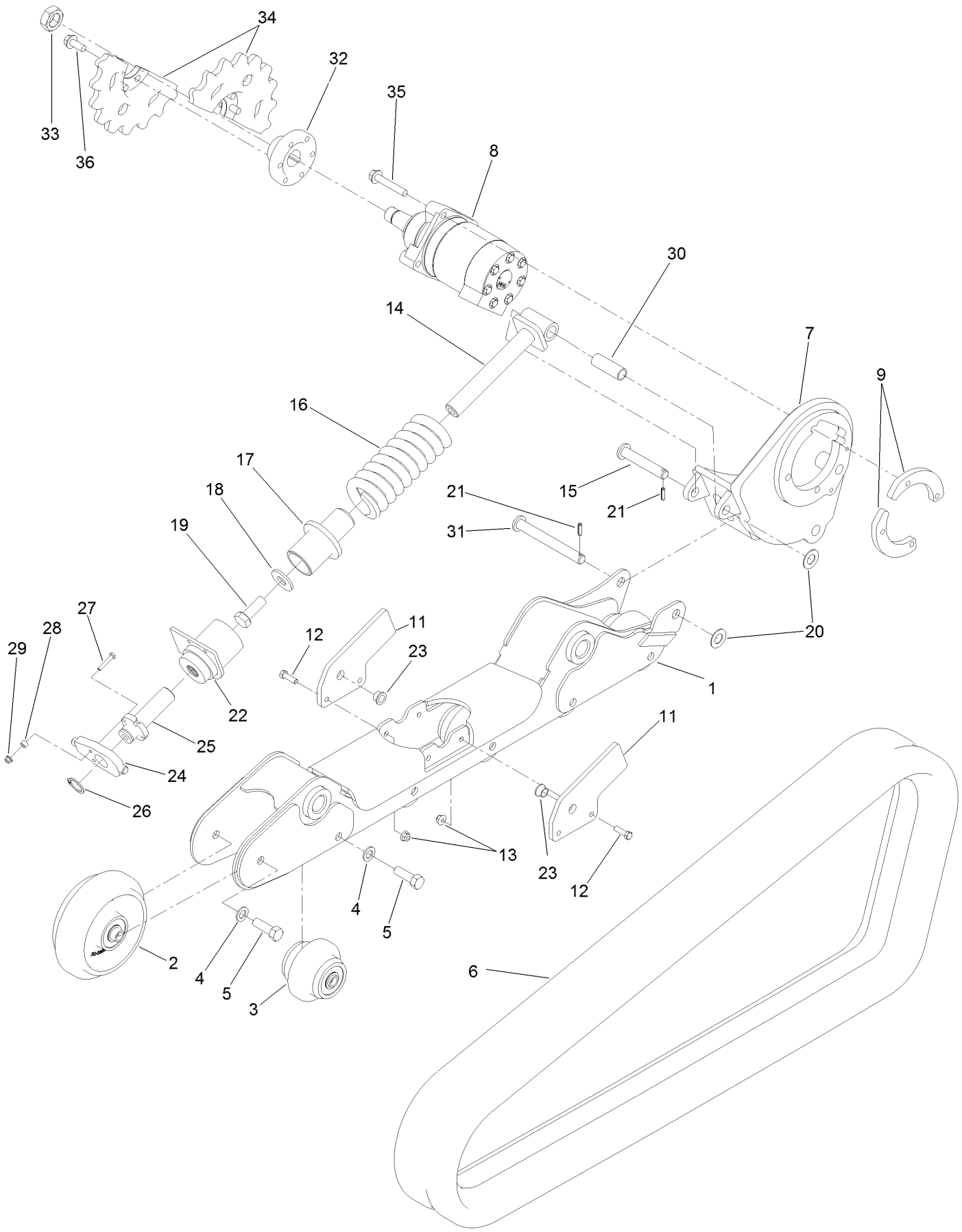

Track Assembly, Sprocket-Driven, RH No. 138-0795 (continued)

Ref.	Part Number	Qty.	Description
1	138-4657	1	Frame-Track, RH
2	137-8807	1	Tensioner Wheel ASM
3	137-8808	5	Road Wheel ASM, Cassette Seal
4	33098-00	12	Washer-Flat
5	111-3484	12	Screw-HH
6	138-0186	1	Track-Narrow
7	137-4619	1	Mount-Motor, RH
8	138-0778	1	Motor-HYD
9	137-4614	2	Plate-Mounting, Wheelmotor
11	137-4632	2	Plate-Ear, Inside
12	323-7	4	Screw-HH
13	104-8301	4	Nut-HF, NI
14	138-0238	1	Tensioner-Spring
15	130-1057	1	Pin-Tensioner
16	138-0237	1	Spring-Compression
17	138-0248	1	Guide-Tensioner
18	99-2659	1	Washer
19	AU426-1232	1	Bolt
20	3256-39	2	Washer-Flat
21	32121-24	2	Pin-Spring
22	137-4650	1	Housing-Tensioner, RH
23	65-8770	2	Bushing-Bellcrank
24	138-4681	1	Plate-Pivot
25	138-0247	1	Screw-Tensioner
26	32151-77	1	Ring-Retaining, External
27	321-9	1	Screw-HH
28	98-4799	1	Spacer
29	32128-32	1	Nut-HHF
30	127-9565	1	Spacer-Pivot
31	137-4518	1	Pin-Pivot
32	137-4645	1	Hub-Sprocket
33	107-9319	1	Nut-Hex
34	137-4643	2	Sprocket-18 Tooth
35	3234-40	4	Screw-HF
36	137-4653	6	Screw-HHF

Hydraulic Motor Assembly No. 138-0778

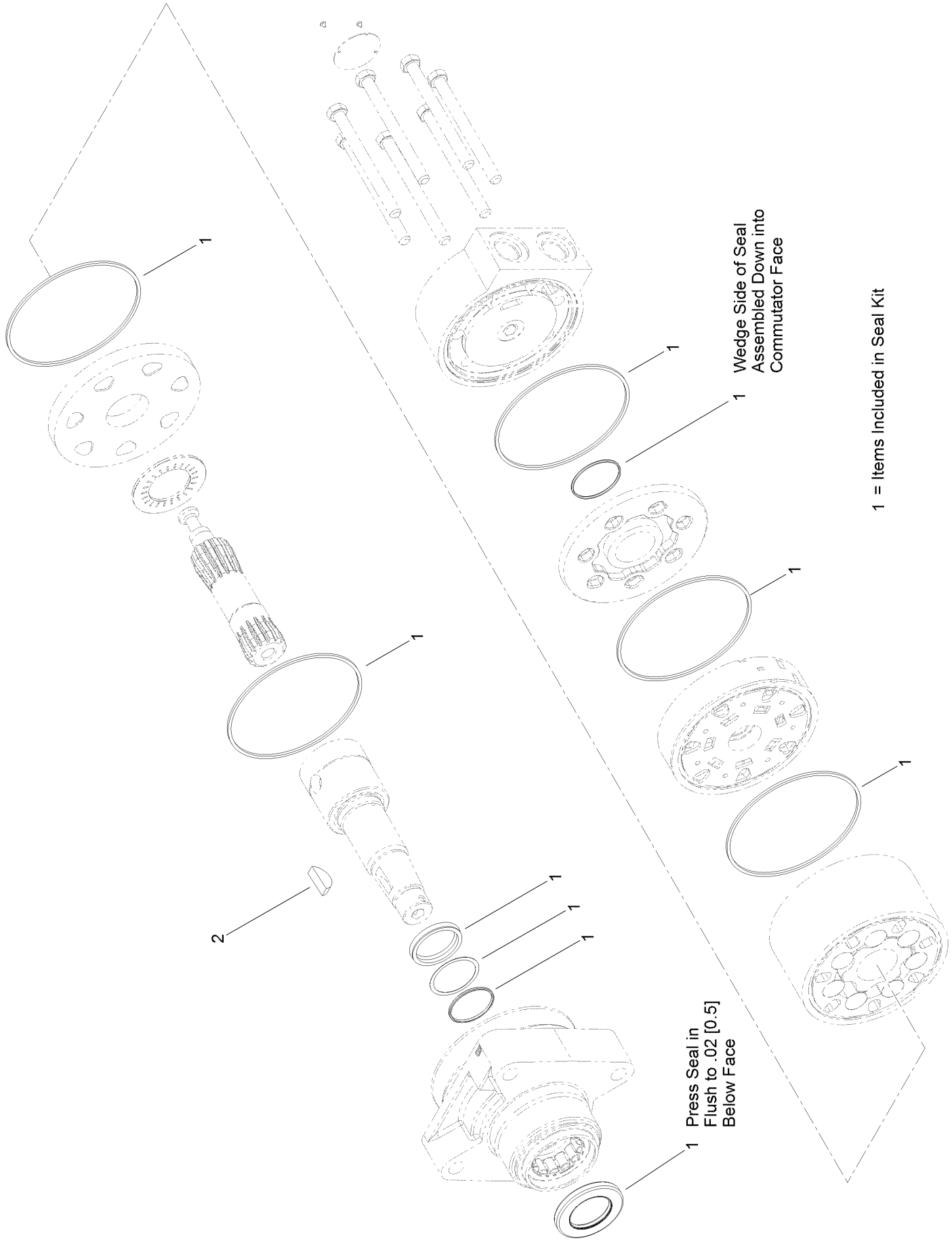

Hydraulic Motor Assembly No. 138-0778 (continued)

Ref.	Part Number	Qty.	Description
1	137-1824	1	Seal Kit
2	3257-42	1	Key-Woodruff

Brake Assembly

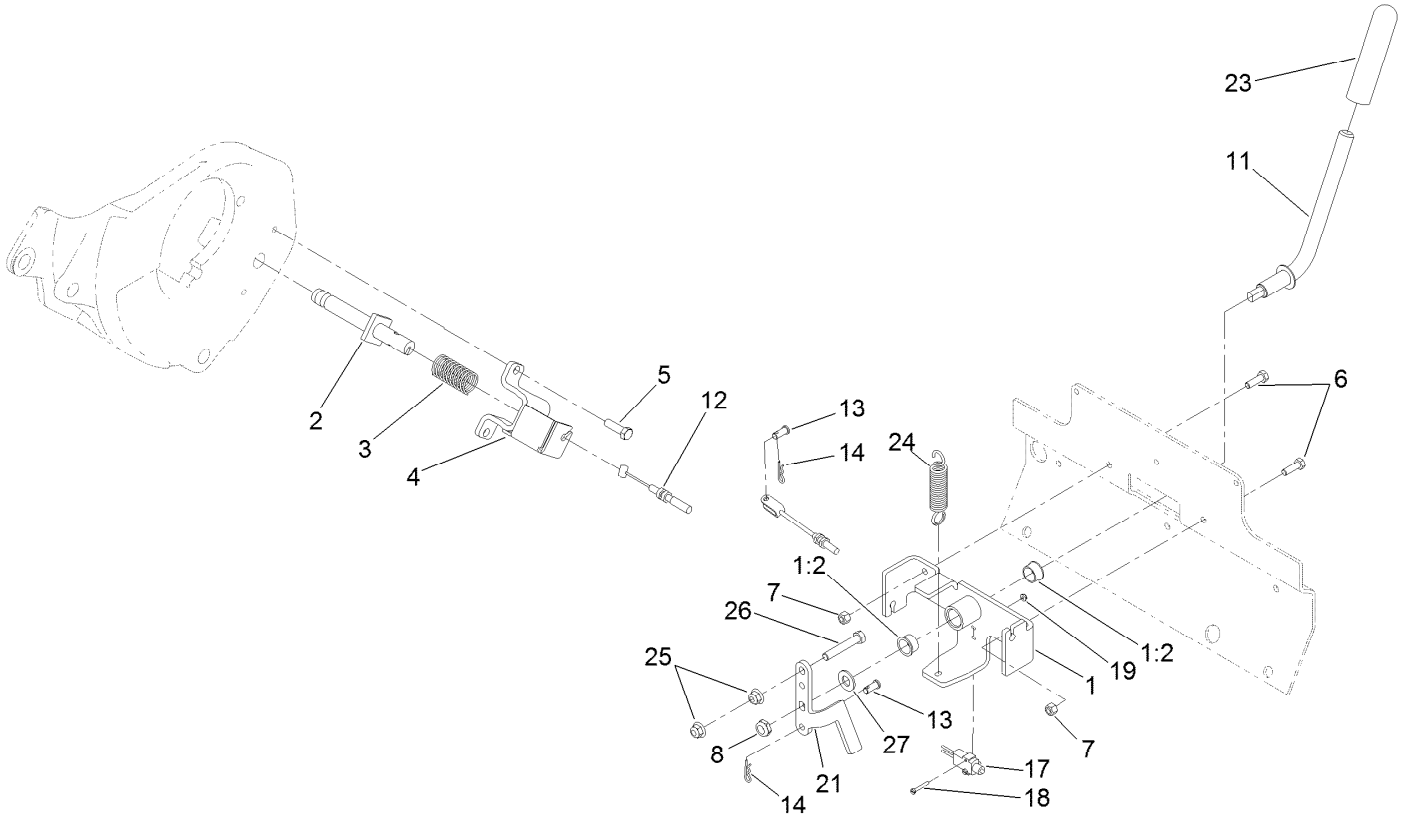

Brake Assembly (continued)

Ref.	Part Number	Qty.	Description
1	127-9649	1	Brake Bracket ASM
1:2	256-252	2	Bearing-Flange
2	130-5278	2	Shaft
3	125-0344	2	Spring-Compression
4	130-5284-03	2	Bracket-Brake
5	323-7	4	Screw-HH
6	322-5	2	Screw-HH
7	3296-29	2	Nut-Lock, NI
8	3296-45	1	Nut-Hex
11	132-8475	1	Lever-Brake
12	130-7737	2	Cable-Brake
13	283-62	2	Pin-Clevis
14	3290-307	2	Pin-Cotter
17	95-8900	1	Switch
18	32105-9	2	Screw
19	3296-9	2	Nut-Hex
21	132-8473-03	1	Plate-Linkage, Brake
23	110-1037	1	Grip-Handle
24	93-5985	1	Spring-Extension
25	104-8301	2	Nut-HF, NI
26	104-3396	1	Screw-HH
27	3256-26	1	Washer-Flat

Front Tower Assembly

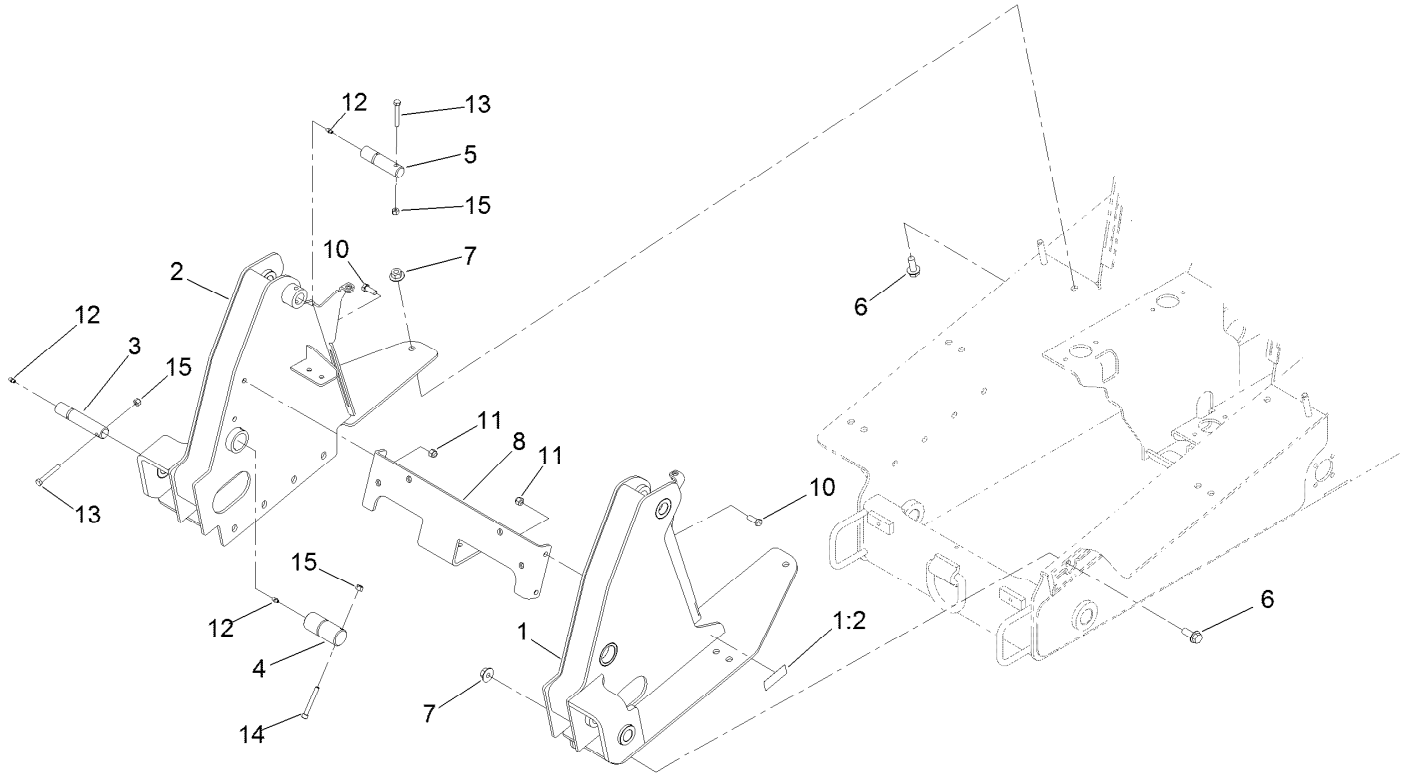

Front Tower Assembly (continued)

Ref.	Part Number	Qty.	Description
1	130-5323	1	Tower-Front, LH
1:2	115-2047	1	Decal-Surface, Hot
2	130-5177-01	1	Tower, RH
3	131-9201	2	Pin-HYD
4	125-3748	2	Pin-Arm
5	125-3695	2	Pin-Link
6	3234-38	18	Screw-HHF
7	32128-52	18	Nut-Lock, Flange
8	125-3667-03	1	Plate-Cross, Tower
10	AU426-616	4	Screw-HH
11	3296-39	4	Nut-Lock, NI
12	302-5	6	Fitting-Grease
13	322-11	4	Screw-HH
14	3274-40	2	Screw-HSH
15	3296-29	6	Nut-Lock, NI

Hydraulic Hose Assembly

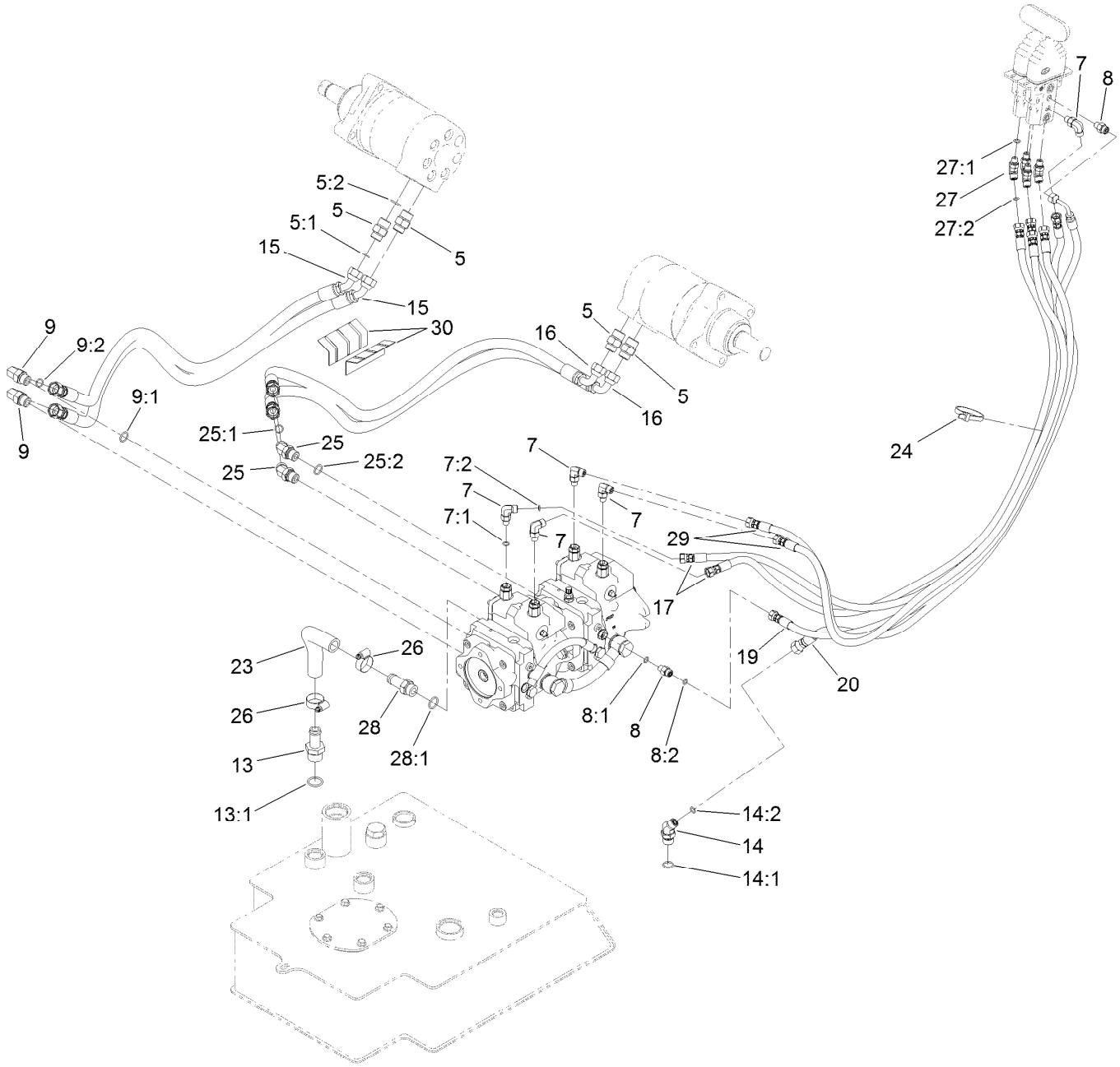

Hydraulic Hose Assembly (continued)

Ref.	Part Number	Qty.	Description
5	340-6	4	Fitting-Straight
5:1	237-30	1	O-Ring
5:2	237-80	1	O-Ring
7	340-132	5	Fitting-Elbow, 90 DEG
7:1	237-78	1	O-Ring
7:2	237-21	1	O-Ring
8	340-92	2	Fitting-Straight
8:1	237-78	1	O-Ring
8:2	237-21	1	O-Ring
9	340-98	2	Fitting-Elbow, 90 DEG
9:1	237-79	1	O-Ring
9:2	237-30	1	O-Ring
13	354-73	1	Fitting
13:1	237-81	1	O-Ring
14	340-138	1	Fitting-HYD, 45 DEG
14:1	237-79	1	O-Ring
14:2	237-22	1	O-Ring
15	133-0226	2	Hose-HYD

Ref.	Part Number	Qty.	Description
16	130-7734	2	Hose-HYD
17	127-9622	2	Hose-HYD
19	127-9624	1	Hose-HYD
20	127-9625	1	Hose-Return
23	133-0231	1	Hose-Return
24	3334-945	1	Tie-Cable
25	340-101	2	Fitting-HYD, 45 DEG
25:1	237-30	1	O-Ring
25:2	237-79	1	O-Ring
26	2412-129	2	Clamp-Hose
27	340-103	4	Fitting-HYD, 45 DEG
27:1	237-78	1	O-Ring
27:2	237-21	1	O-Ring
28	354-136	1	Fitting-STR
28:1	237-80	1	O-Ring
29	127-9623	2	Hose-HYD
30	AU112950	2	Protector-Hose

Radiator and Air Cleaner Assembly

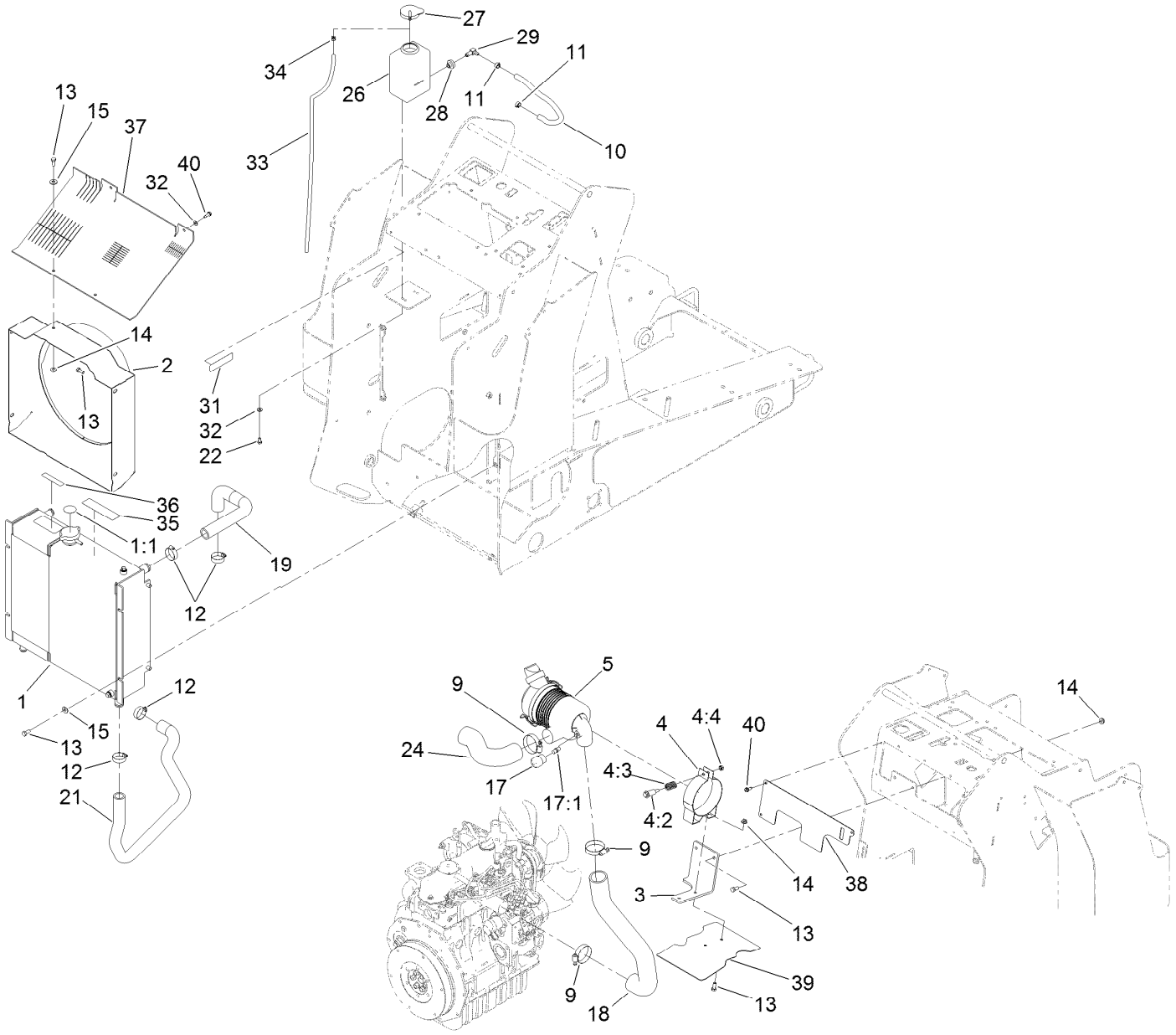

Radiator and Air Cleaner Assembly (continued)

Ref.	Part Number	Qty.	Description
1	130-1030	1	Combo Cooler ASM
1:1	106-6755	1	Decal-Cap, Radiator
2	130-1144-03	1	Shroud
3	125-0377-03	1	Bracket
4	93-2191	1	Air Cleaner Mounting Band ASM
4:2	94-3653	1	Bolt
4:3	94-3654	1	Spring
4:4	48-9510	1	Nut
5	93-2190	1	Air Cleaner ASM
9	2412-92	3	Clamp-Hose
10	110-4110	1	Hose-LP
11	92-2379	2	Clamp-Hose
12	2412-34	4	Clamp-Hose
13	322-3	14	Screw-HH
14	32128-20	6	Nut-HF
15	3256-3	6	Washer-Flat
17	104-3563	1	Indicator
17:1	94-1416	1	Adapter-Indicator

Ref.	Part Number	Qty.	Description
18	131-9173	1	Hose-Intake, Engine
19	130-1145	1	Hose-Radiator
21	131-9153	1	Hose-Radiator, Lower
22	321-2	2	Screw-HH
24	130-0952	1	Hose-Air, Inlet
26	1-643163	1	Tank-Overflow
27	1-643164	1	Cap-Tank, Overflow
28	46-6560	1	Bushing
29	46-6550	1	Fitting-Elbow, 90 DEG
31	115-4865	1	Decal-Fill, Radiator
32	3256-22	4	Washer-Flat
33	108-6344	1	Hose-LP
34	2412-80	1	Clamp-Hose
35	93-7814	1	Decal-Danger
36	93-6681	1	Decal-Warning, Fan
37	131-9214	1	Guard-Air
38	131-9215	1	Cover-Air
39	131-9216	1	Baffle-Air
40	32104-95	5	Screw-HWH

Air Cleaner Assembly No. 93-2190

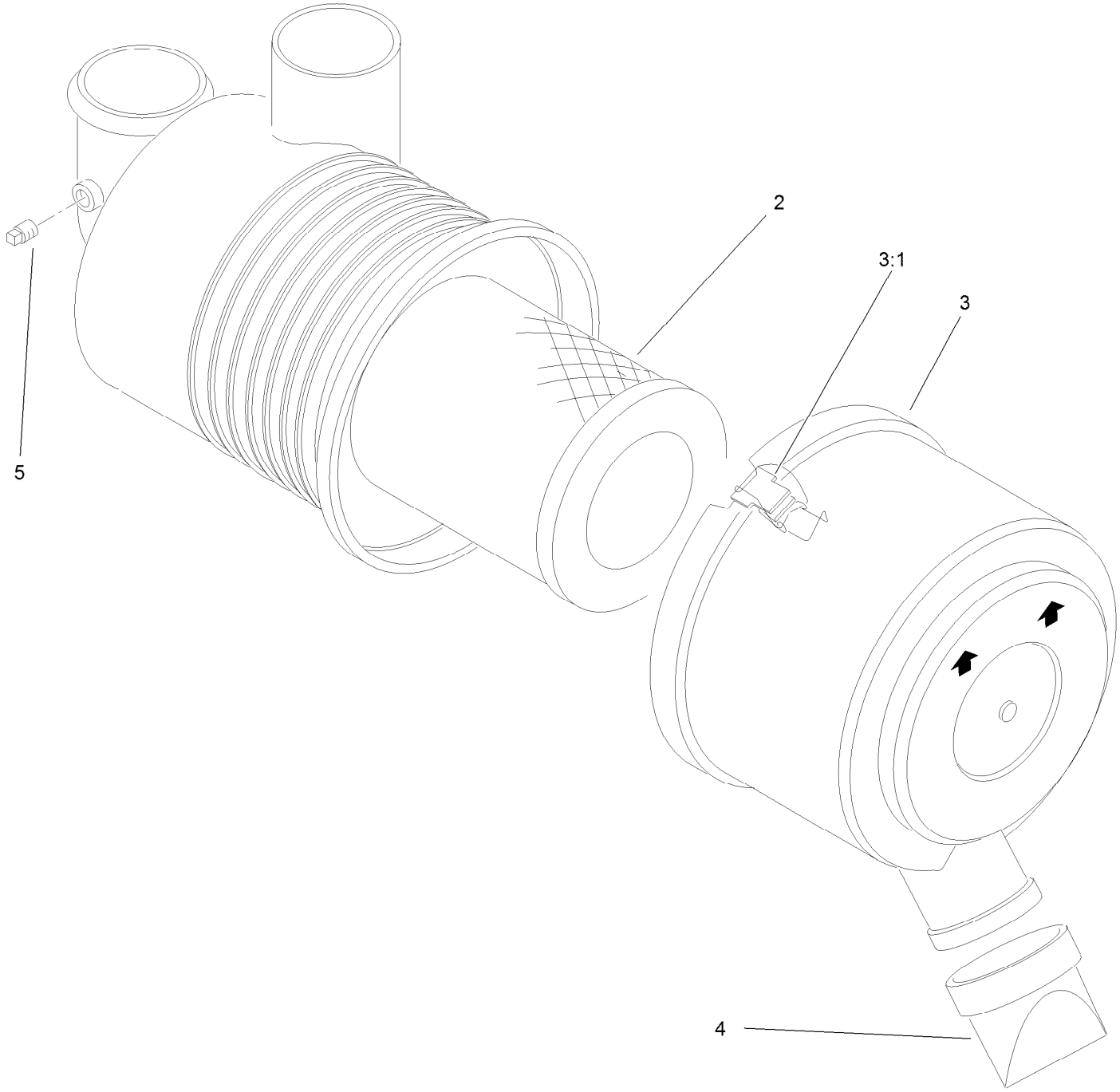

Air Cleaner Assembly No. 93-2190 (continued)

Ref.	Part Number	Qty.	Description
2	108-3811	1	Filter-Air
3	94-3652	1	Cover ASM
3:1	1-643283	2	Latch-Cleaner, Air
4	87-9400	1	Valve-Vacuator
5	285-17	1	Plug-Pipe

Engine Mount and Muffler Assembly

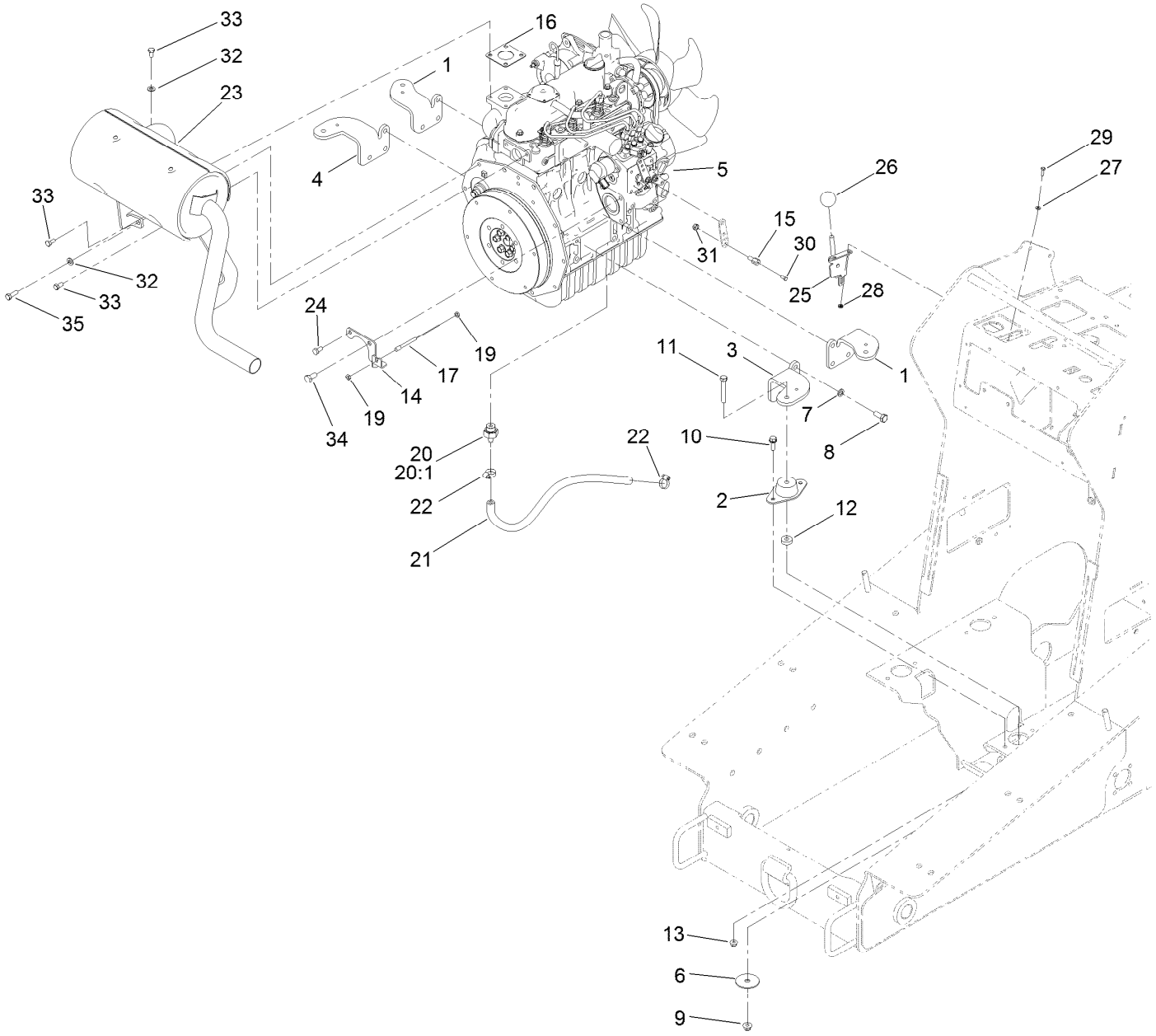

Engine Mount and Muffler Assembly (continued)

Ref.	Part Number	Qty.	Description
1	115-8066-03	2	Mount-Engine
2	121-9076	4	Mount-Engine
3	115-8068-03	1	Mount-Engine LH
4	115-8063-03	1	Mount-Engine, RH
5	130-7727	1	Engine ASM
6	87-5100	4	Washer-Snubbing
7	48-9590	12	Washer-Lock
8	43-0090	12	Screw-HH
9	104-8301	4	Nut-HF, NI
10	3234-29	8	Screw-HHF
11	323-12	4	Screw-HH
12	62-6660	4	Spacer
13	104-8300	8	Nut-HF, NI
14	130-1148-03	1	Bracket-Throttle
15	98-9311	1	Swivel-Throttle
16	99-8343	1	Gasket-Muffler
17	130-7743	1	Cable-Throttle
19	3220-1	2	Nut-Jam

Ref.	Part Number	Qty.	Description
20	114-8587	1	Fitting-Hose
20:1	98-9399	1	Gasket
21	92-7424	1	Hose-Overflow, Radiator
22	2412-36	2	Clamp-Hose
23	130-7732	1	Muffler-Diesel
24	33114-016	1	Screw-HH
25	108-9730	1	Lever-Control
26	233-42	1	Knob
27	3256-51	2	Washer-Flat
28	32149-7	2	Nut-Keps
29	3290-134	2	Screw
30	25-8640	1	Screw-HH
31	3296-20	1	Nut-Lock, NI
32	3256-23	5	Washer-Plain
33	99-5132	6	Bolt
34	63-7790	1	Screw-Cap
35	99-5131	1	Bolt

Tandem Pump and Gear Pump Assembly

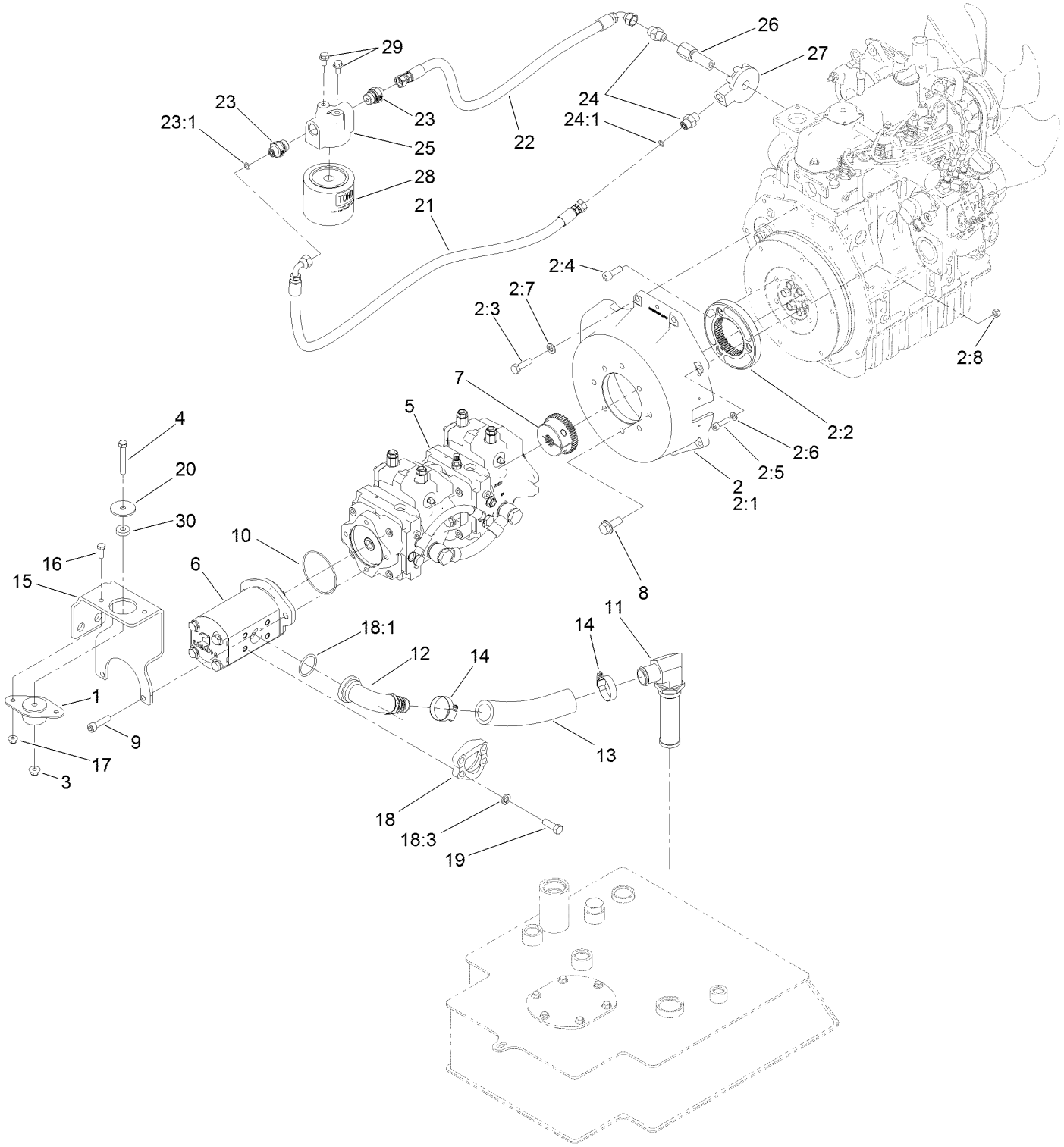

Tandem Pump and Gear Pump Assembly (continued)

Ref.	Part Number	Qty.	Description
1	121-9076	1	Mount-Engine
2	130-7728	1	Mount-Pump
2:1	130-7724	1	Housing-Pump Mount
2:2	125-1179	1	Flange-Coupler
2:3	56-2140	2	Screw-HH
2:4	108-1420	3	Screw-HSH
2:5	94-3559	4	Screw-HSH
2:6	115-7370	4	Washer-Plain
2:7	33095-00	2	Washer-Flat
2:8	33014-00	1	Nut-Hex
3	104-8301	1	Nut-HF, NI
4	323-12	1	Screw-HH
5	121-4593	1	Pump-Tandem
6	130-7731	1	Pump-Gear
7	130-7725	1	Hub-Pump
8	3234-38	2	Screw-HHF
9	09718	2	Screw-Sh
10	237-161	1	O-Ring
11	130-7582	1	Strainer-Suction
12	112-7374	1	Fitting
13	130-7561	1	Hose-Suction
14	2412-111	2	Clamp

Ref.	Part Number	Qty.	Description
15	125-3736-01	1	Plate-Support
16	322-4	2	Screw-HH
17	104-8300	2	Nut-HF, NI
18	114-0090	1	Flange Kit
18:1	115-5420	1	O-Ring
18:2	324-6	4	Screw-HH ■ ●
18:3	3253-6	4	Washer-Lock
19	324-5	4	Screw-HH
20	63-7400	1	Washer-Rebound
21	130-7717	1	Hose-HYD
22	130-7719	1	Hose-HYD
23	130-7715	2	Fitting-HYD
23:1	237-22	1	O-Ring
24	130-7716	2	Fitting-HYD
24:1	237-22	1	O-Ring
25	130-7588	1	Base-Filter
26	130-7587	1	Pipe-Joint
27	130-7586	1	Base-Filter
28	104-5169	1	Filter-Oil
29	33104-016	2	Screw-HHF
30	62-6660	1	Spacer

● Not illustrated

■ Not used for this configuration

Gear Pump Assembly No. 130-7731

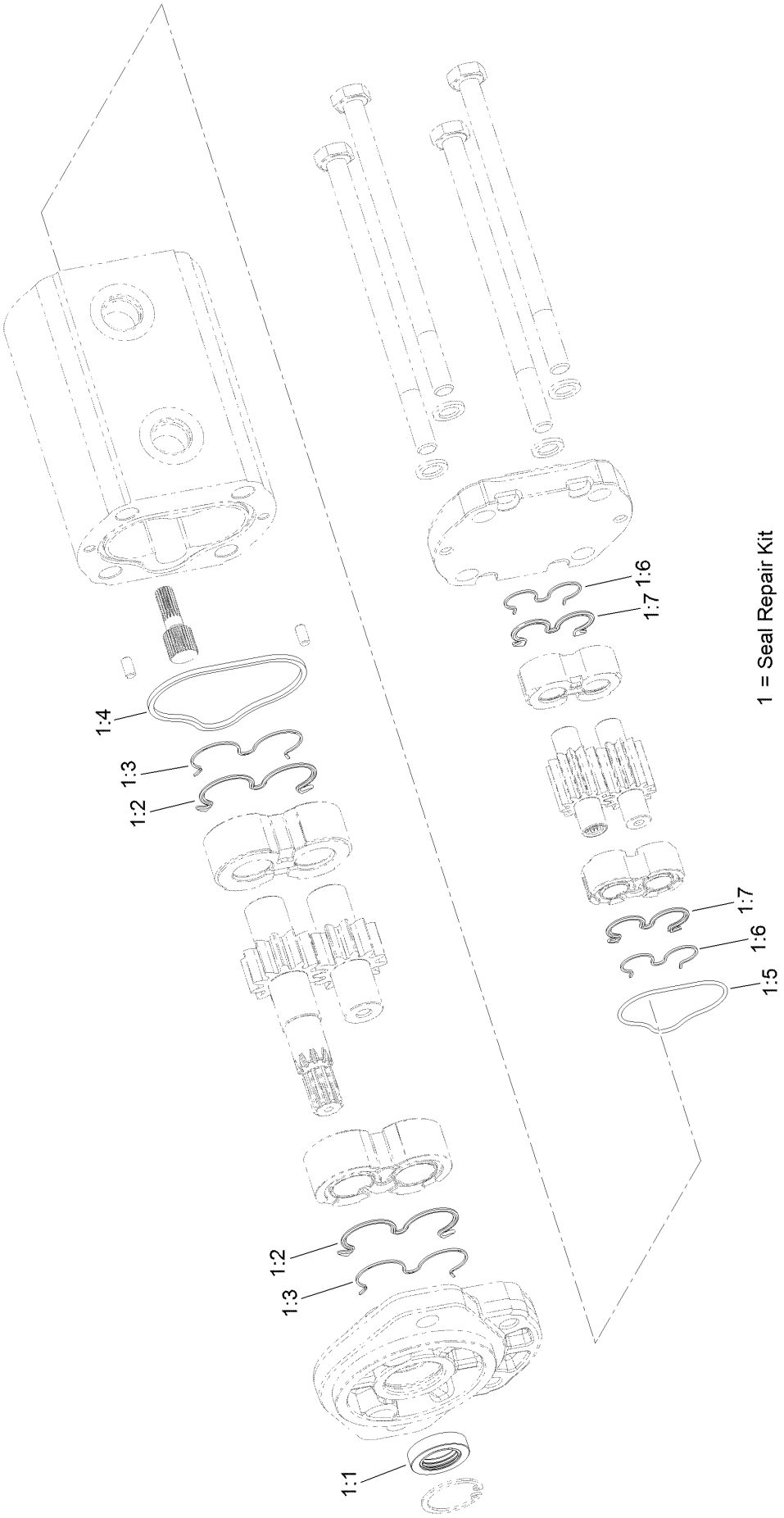

Gear Pump Assembly No. 130-7731 (continued)

Ref.	Part Number	Qty.	Description
1	132-6028	1	Seal Kit
1:1		1	Seal-Shaft ●
1:2		2	Seal-Gear ●
1:3		2	Ring-Backup ●
1:4		1	Seal-Square ●
1:5		1	O-Ring ●
1:6		2	Ring-Backup ●
1:7		2	Seal-Gear, Rear ●

● Not serviced separately

Control Valve and Reference Bar Assembly

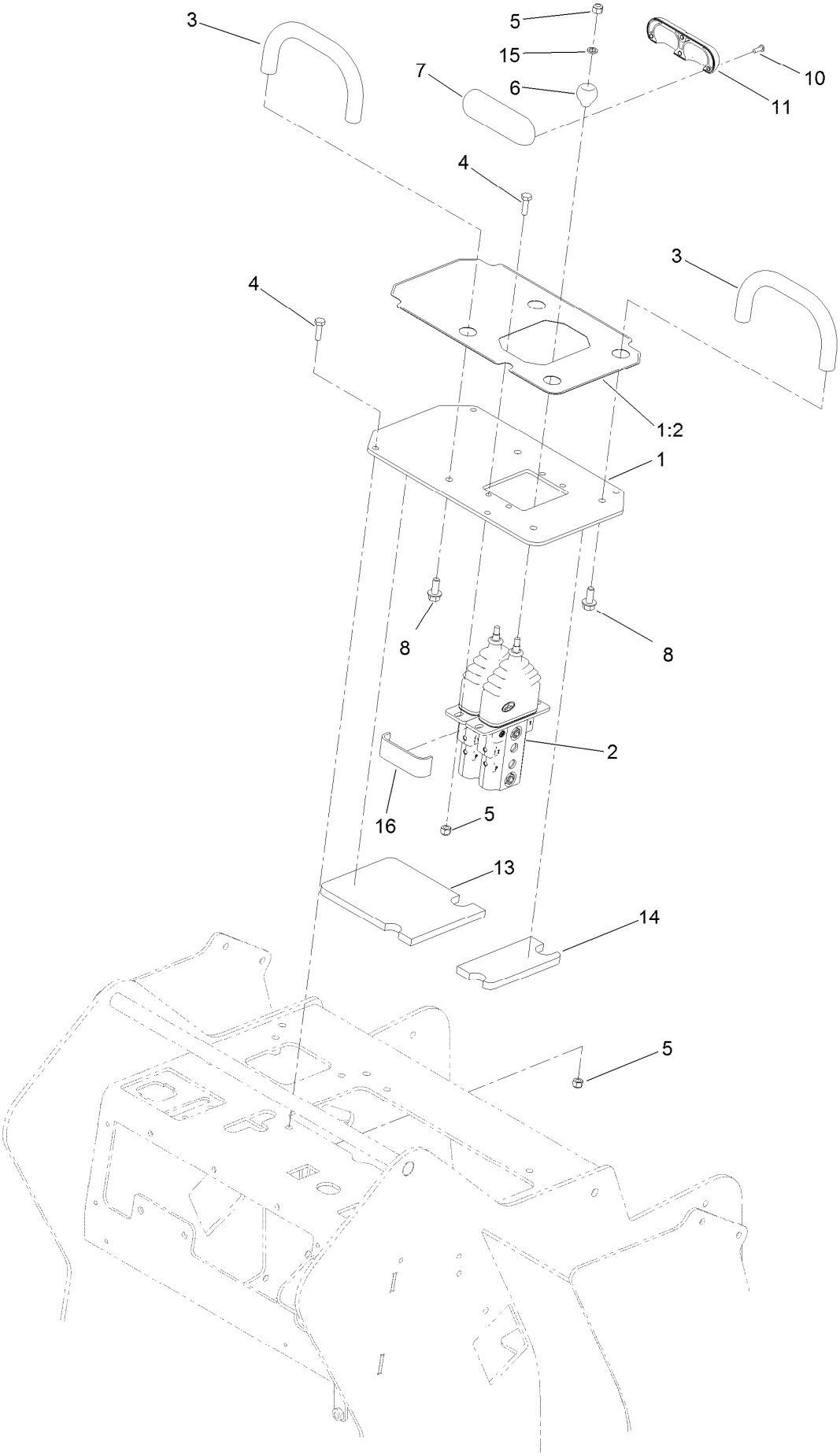

Control Valve and Reference Bar Assembly (continued)

Ref.	Part Number	Qty.	Description
1	130-5321	1	Plate-Control
1:2	131-0708	1	Decal-Control Panel
2	125-3704	1	Valve-Control
3	112-2620	2	Bar-Reference
4	321-5	8	Screw-HH
5	3296-42	10	Nut-Lock, NI
6	130-7723	2	Ball-Traction
7	130-7692	1	Handle-Control
8	3234-5	4	Screw-HHF
10	94-6961	4	Screw
11	131-9162	1	Handle-Traction
13	132-8414	1	Foam-Shield, Heat
14	132-8415	1	Foam-Shield, Heat
15	75-5470	2	Spacer-Bearing
16	133-0222	1	Tape-Wire

Control Valve Assembly No. 125-3704

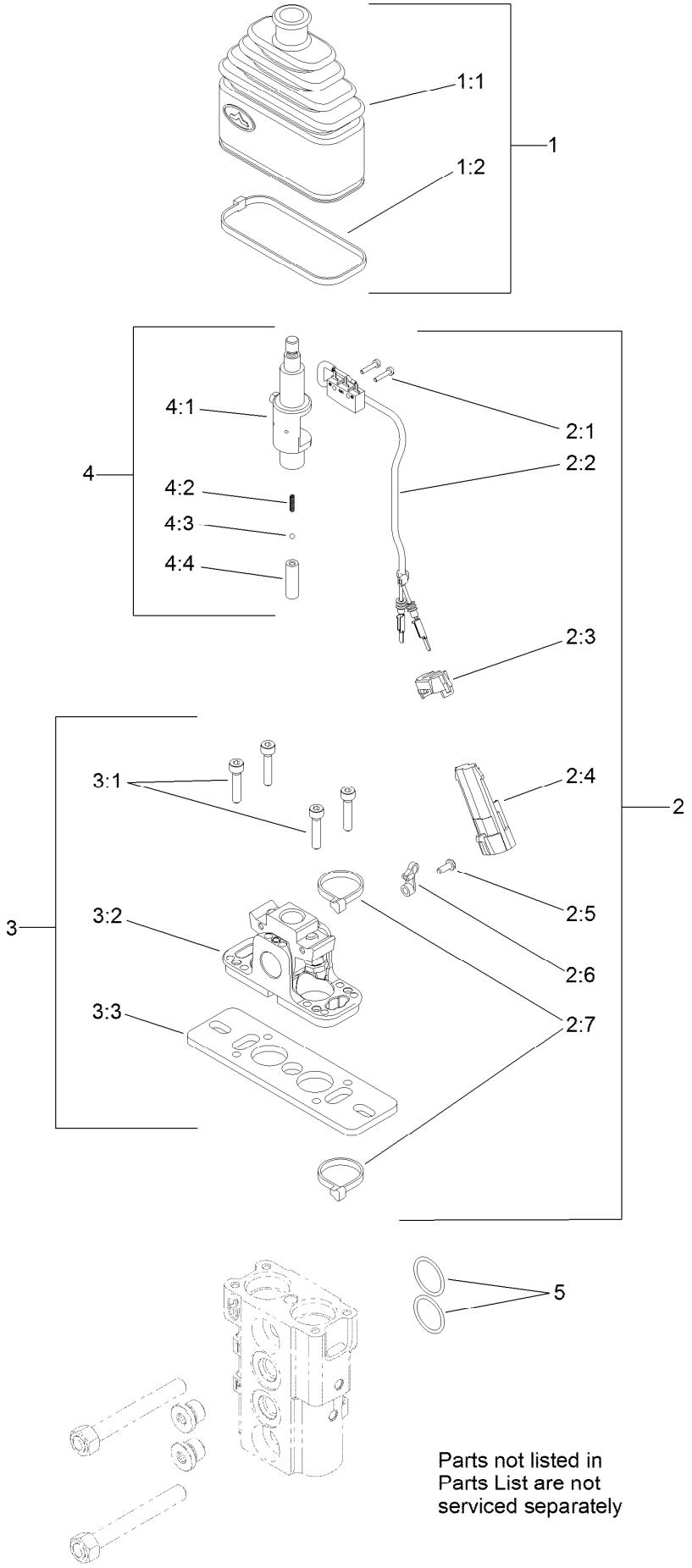

Control Valve Assembly No. 125-3704 (continued)

Ref.	Part Number	Qty.	Description
1	132-6034	2	Bellow Kit
1:1		1	Bellow-Rubber ●
1:2		1	Tie-Cable ●
2	132-6035	2	Limit Switch Kit
2:1		2	Screw ●
2:2		1	Cable ●
2:3		1	Fairlead ●
2:4		1	Connector ●
2:5		1	Screw ●
2:6		1	Tie-Wire ●
2:7		2	Tie-Cable ●

Ref.	Part Number	Qty.	Description
3	132-6036	2	Fulcrum Kit
3:1		4	Screw ●
3:2		1	Support Kit ●
3:3		1	Plate-Mounting ●
4	132-6037	2	Switch Holder Lever Kit
4:1		1	Lever-Holder, Switch ●
4:2		1	Spring-Return ●
4:3		1	Sphere ●
4:4		1	Holder-Spring ●
5	100-7246	2	O-Ring

● Not serviced separately

2-Spool Valve and Auxiliary Valve Assembly

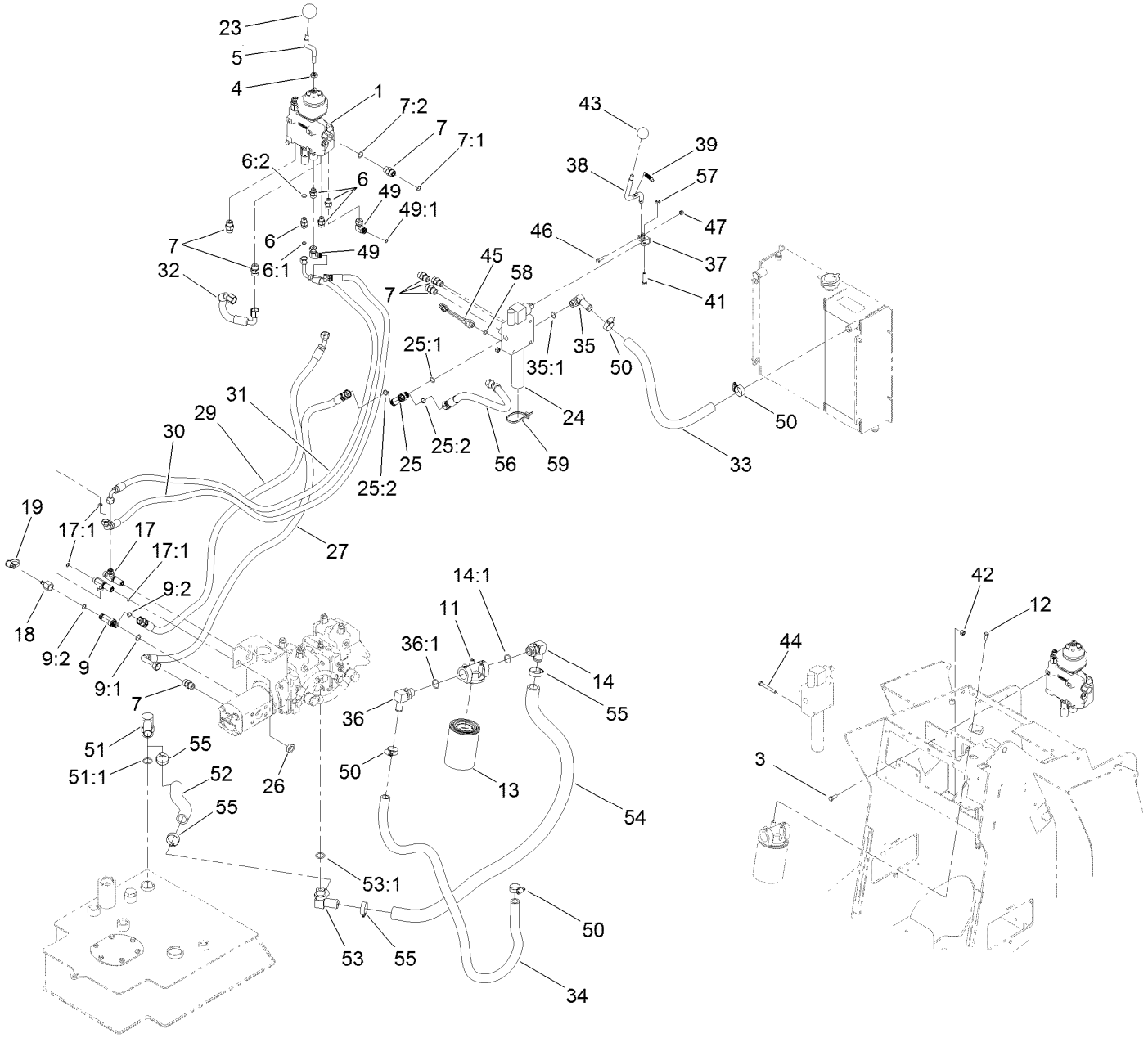

2-Spool Valve and Auxiliary Valve Assembly (continued)

Ref.	Part Number	Qty.	Description
1	130-7710	1	2 Spool Valve ASM
3	322-4	3	Screw-HH
4	51-2070	1	Nut
5	121-4577	1	Shaft-Handle
6	340-2	4	Fitting-Straight
6:1	237-22	1	O-Ring
6:2	237-42	1	O-Ring
7	340-4	7	Fitting-Straight
7:1	237-30	1	O-Ring
7:2	237-79	1	O-Ring
9	340-109	1	Fitting-Tee
9:1	237-79	1	O-Ring
9:2	237-30	2	O-Ring
11	92-5821	1	Head-Filter
12	321-4	2	Screw-HH
13	86-3010	2	Filter-Oil
14	100-4202	1	Fitting-90
14:1	237-81	1	O-Ring
17	340-68	2	Fitting-Tee, Bulkhead
17:1	237-22	3	O-Ring
18	100-5616	1	Fitting
19	354-79	1	Cap-Dust
23	233-21	1	Knob
24	130-7562	1	Valve-Auxiliary
25	340-157	1	Fitting-HYD, Tee
25:1	237-79	1	O-Ring
25:2	237-30	2	O-Ring
26	340-70	2	Nut-Lock
27	127-9629	1	Hose-HYD
29	127-9631	1	Hose-HYD
30	127-9632	1	Hose-HYD
31	130-7597	1	Hose-HYD
32	127-9634	1	Hose-Return
33	130-7565	1	Hose-Return
34	130-7566	1	Hose-Return
35	353-954	1	Fitting-Elbow, 90
35:1	237-79	1	O-Ring
36	353-987	1	Fitting-Elbow, 90
36:1	237-81	1	O-Ring
37	130-1087	1	Bracket-Auxiliary
38	130-1083	1	Rod-Auxiliary
39	114-0249	1	Spring-Extension
41	33114-035	1	Screw-HH
42	3296-29	3	Nut-Lock, NI
43	233-42	1	Knob
44	322-12	3	Screw-HH
45	72-4310	1	Switch-Ball
46	321-8	1	Screw-HH
47	3296-42	1	Nut-Lock, NI
49	340-159	2	Elbow-90
49:1	237-22	2	O-Ring
50	2412-129	4	Clamp-Hose
51	56-9530	1	Fitting-HYD, 90 DEG
51:1	237-117	1	O-Ring
52	127-9627	1	Hose-Suction
53	AU375462A1	1	Connector
53:1	237-81	1	O-Ring
54	127-9626	1	Hose-Return
55	2412-34	4	Clamp-Hose
56	120-0880	1	Hose-HYD
57	33024-00	1	Nut-Lock, NI
58	237-42	1	O-Ring
59	3290-378	2	Tie-Cable

2-Spool Valve Assembly No. 130-7710

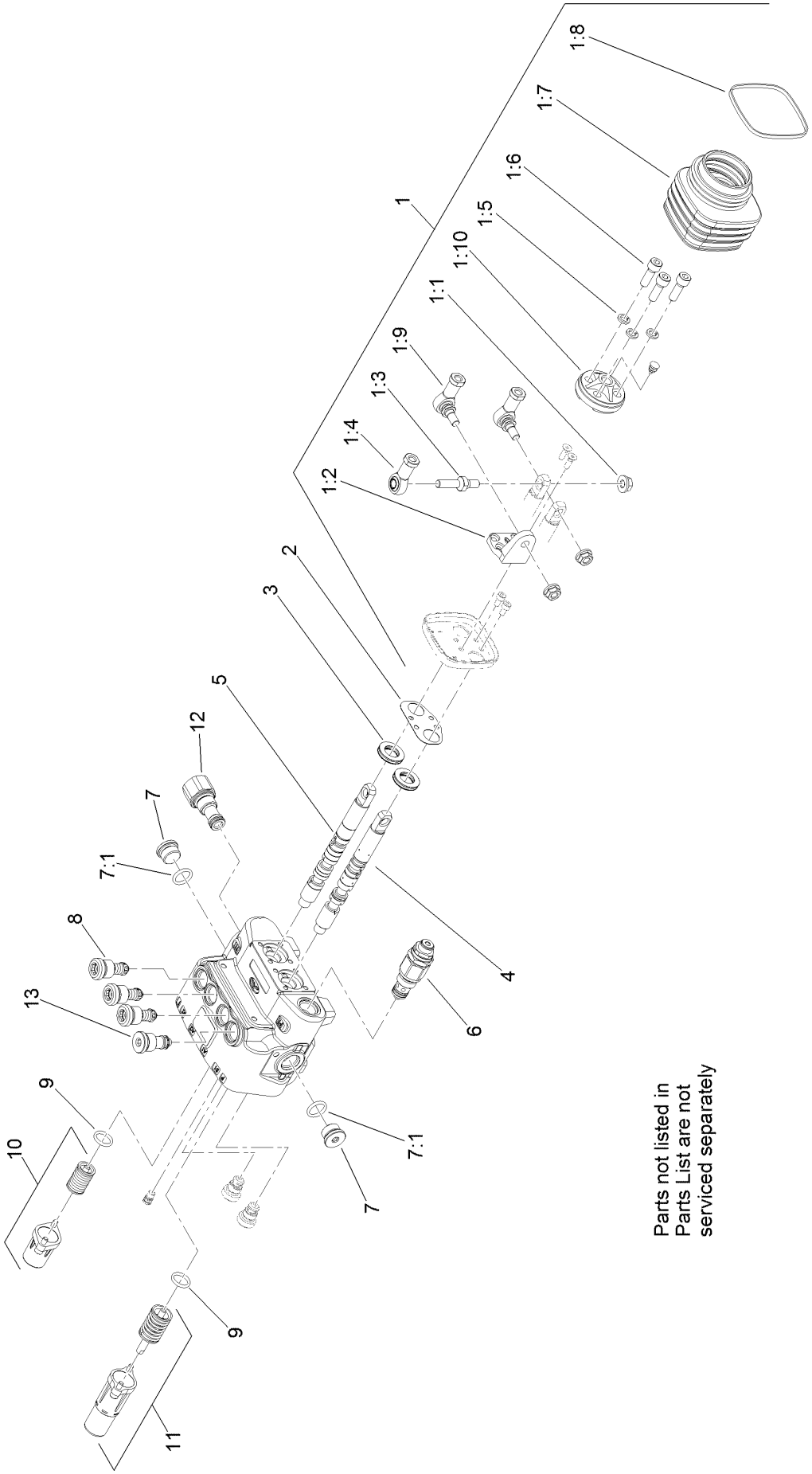

Parts not listed in Parts List are not serviced separately

2-Spool Valve Assembly No. 130-7710 (continued)

Ref.	Part Number	Qty.	Description
1	106-7724	1	Joystick Kit
1:1	98-0668	3	Nut
1:2	106-7726	1	Pivot-Joystick
1:3	106-7727	1	Pin-Joystick
1:4	106-7728	1	End-Rod
1:5	42-9850	3	Washer-Lock, Spring
1:6	98-5828	3	Screw-HSH
1:7	106-7729	1	Bellow-Rubber
1:8	3290-379	1	Tie-Cable
1:9	106-7730	2	Joint-Joystick
1:10	106-7731	1	Holder-Articulated
2	106-7725	1	Seal-Joystick

Ref.	Part Number	Qty.	Description
3	106-7738	2	Seal-Valve, Spool
4	106-7737	1	Spool-Valve
5	106-7736	1	Spool-Valve
6	132-6031	1	Valve-Relief, Main
7	353-988	2	Plug-Hex
7:1	237-79	1	O-Ring
8	106-7734	3	Valve-Relief
9	106-7719	2	Seal-Valve
10	106-7732	1	Valve Spring Kit
11	106-7733	1	Detent Spring Kit
12	132-6032	1	Joint-SAE 8
13	132-6033	1	Plug

Auxiliary Valve Assembly No. 130-7562

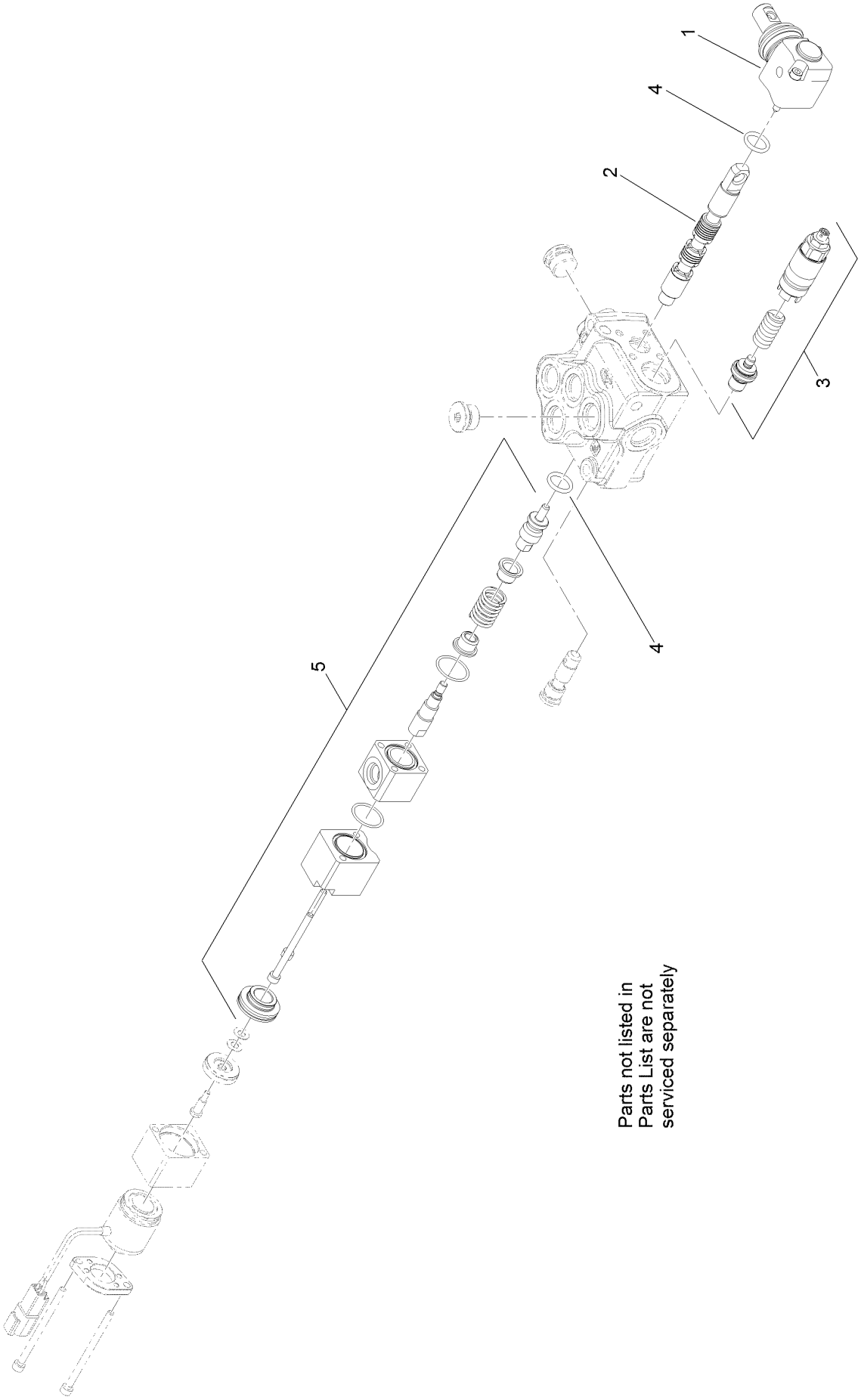

Auxiliary Valve Assembly No. 130-7562 (continued)

Ref.	Part Number	Qty.	Description
1	132-6038	1	Lever Kit (With Screws)
2	114-8624	1	Valve-Spool
3	132-6039	1	Valve-Relief
4	106-7719	2	Seal-Valve
5	132-6040	1	Spring Kit

Loader Arm Assembly

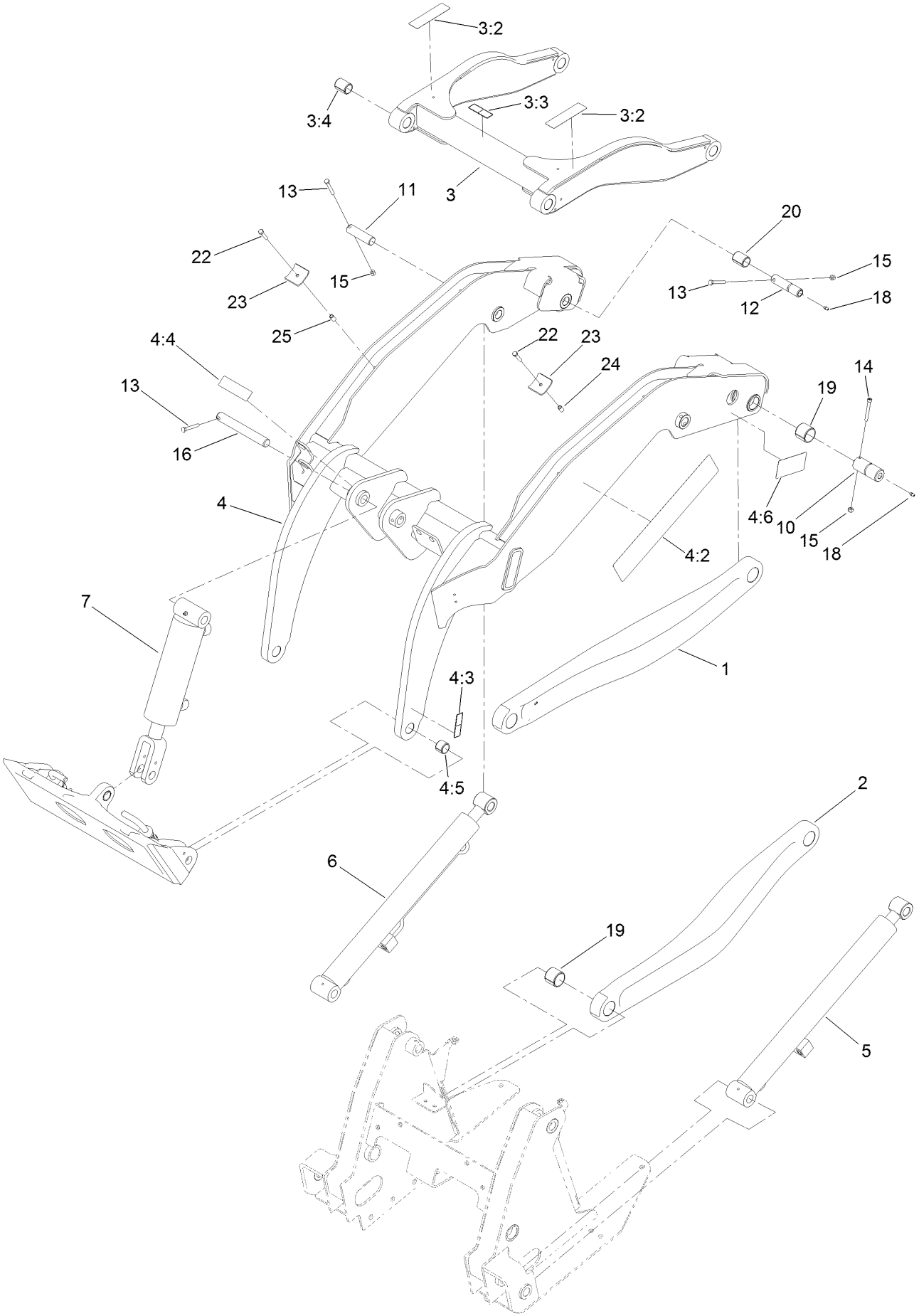

Loader Arm Assembly (continued)

Ref.	Part Number	Qty.	Description
1	130-5151-03	1	Link-Lower, LH
2	130-5153-03	1	Link-Lower, RH
3	130-5318	1	Link-Upper
3:2	130-2836	2	Decal-Warning, Crushing
3:3	120-0625	1	Decal-Warning
3:4	130-5200	4	Bushing-Spring
4	130-5320	1	Arm-Loader
4:2	130-5309	2	Decal
4:3	120-0625	2	Decal-Warning
4:4	115-4855	1	Decal-Caution
4:5	98-4871	2	Bushing-Tension
4:6	131-0711	2	Decal-Warning
5	130-5176	1	Cylinder-Lift, LH
6	130-5175	1	Cylinder-Lift, RH
7	130-5195	1	Cylinder-HYD, Dump

Ref.	Part Number	Qty.	Description
10	125-3748	2	Pin-Arm
11	130-5178	2	Pin-Pivot
12	125-3695	2	Pin-Link
13	322-11	5	Screw-HH
14	3274-40	2	Screw-HSH
15	3296-29	6	Nut-Lock, NI
16	130-5210	1	Pin-Locking
18	302-5	4	Fitting-Grease
19	130-5199	4	Bushing-Spring
20	130-5200	4	Bushing-Spring
22	5-1470	4	Screw-HH
23	130-5221	4	Plate-Holddown, Hose
24	131-9150	2	Spacer-Hose
25	131-9151	2	Spacer-Hose

Hydraulic Cylinder Assembly No. 130-5176

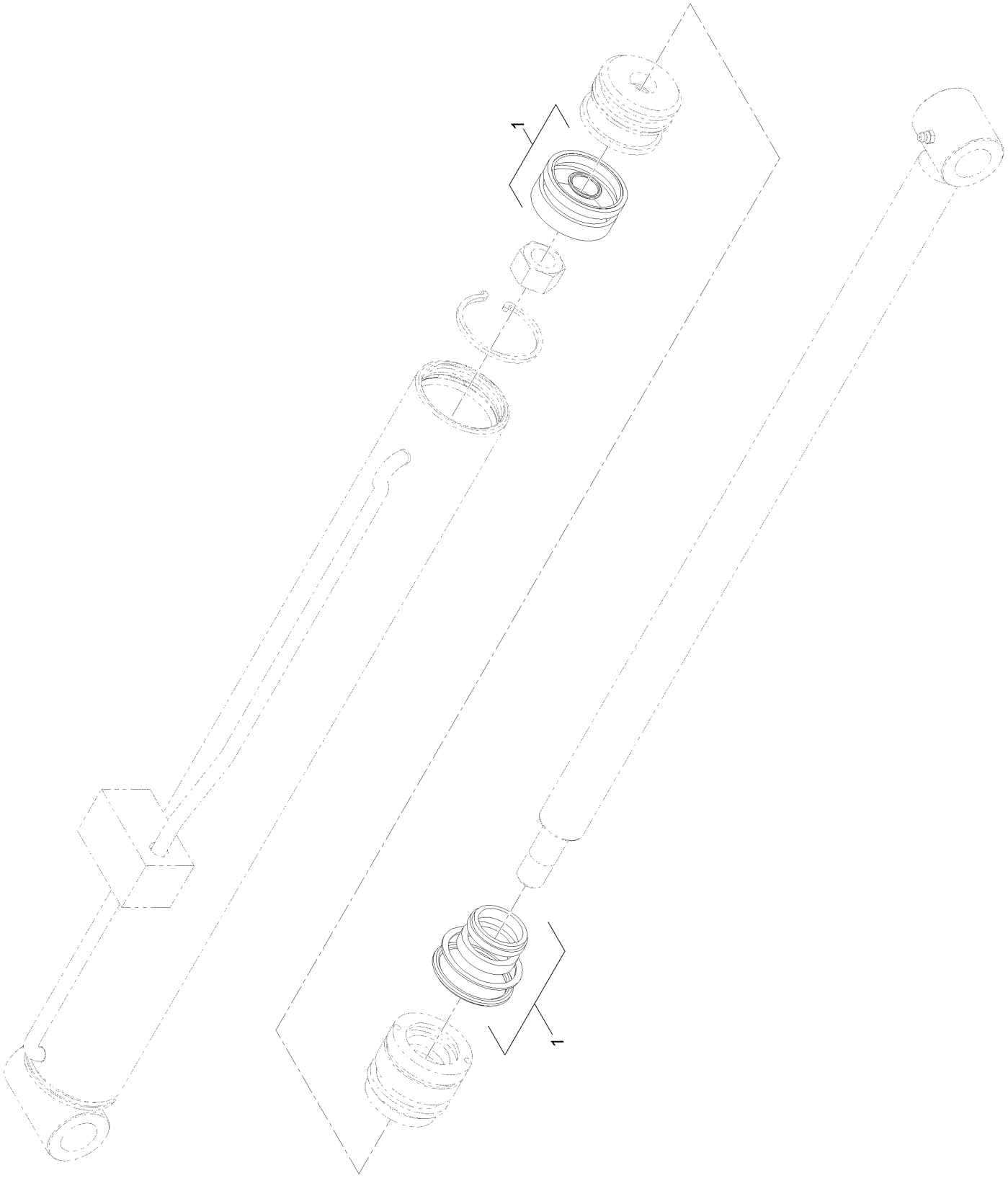

Hydraulic Cylinder Assembly No. 130-5176 (continued)

Ref.	Part Number	Qty.	Description
1	132-6029	1	Seal Kit

Hydraulic Cylinder Assembly No. 130-5175

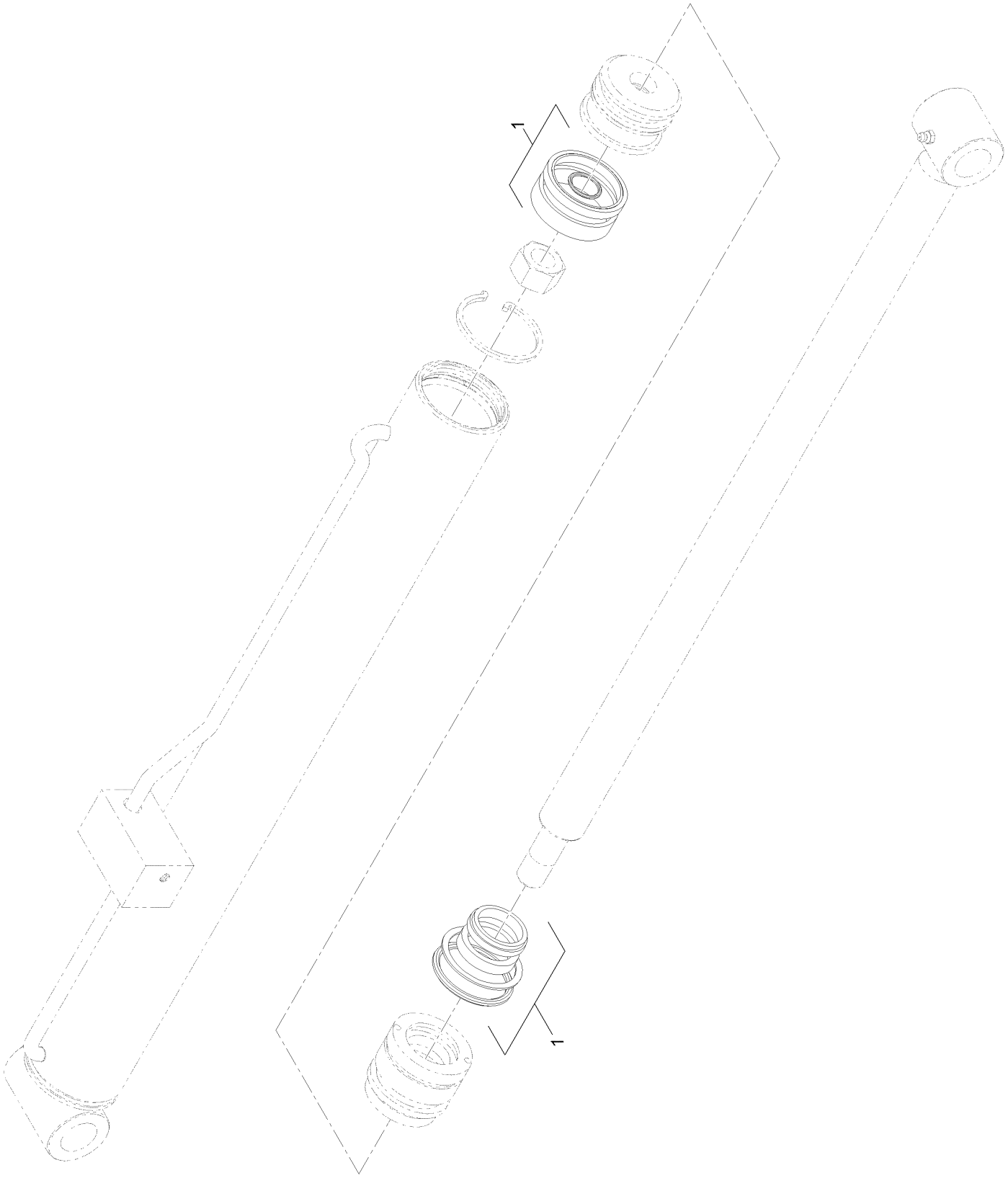

Hydraulic Cylinder Assembly No. 130-5175 (continued)

Ref.	Part Number	Qty.	Description
1	132-6029	1	Seal Kit

Hydraulic Cylinder Assembly No. 130-5195

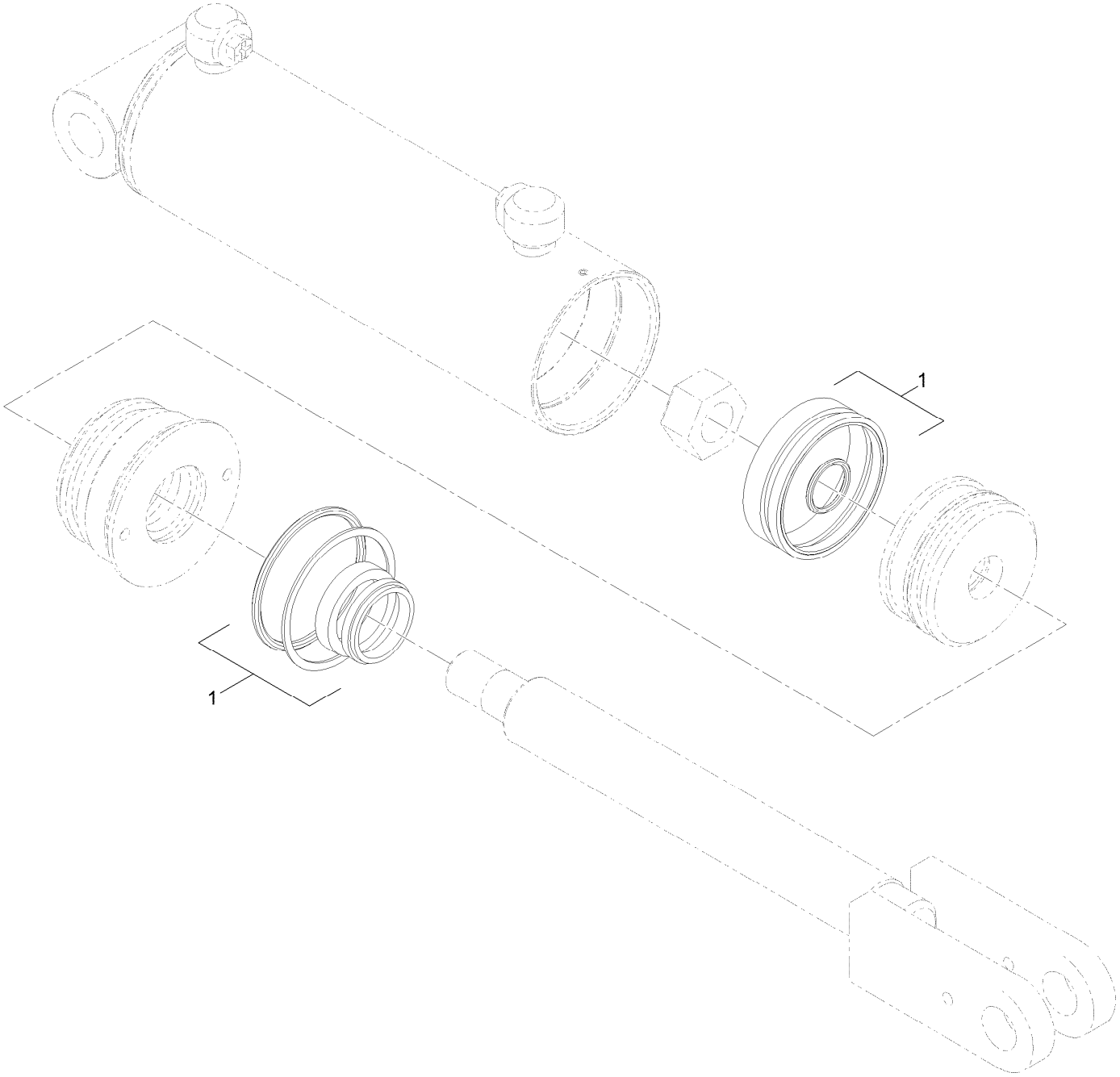

Hydraulic Cylinder Assembly No. 130-5195 (continued)

Ref.	Part Number	Qty.	Description
1	132-6030	1	Seal Kit

Loader Hydraulic Assembly

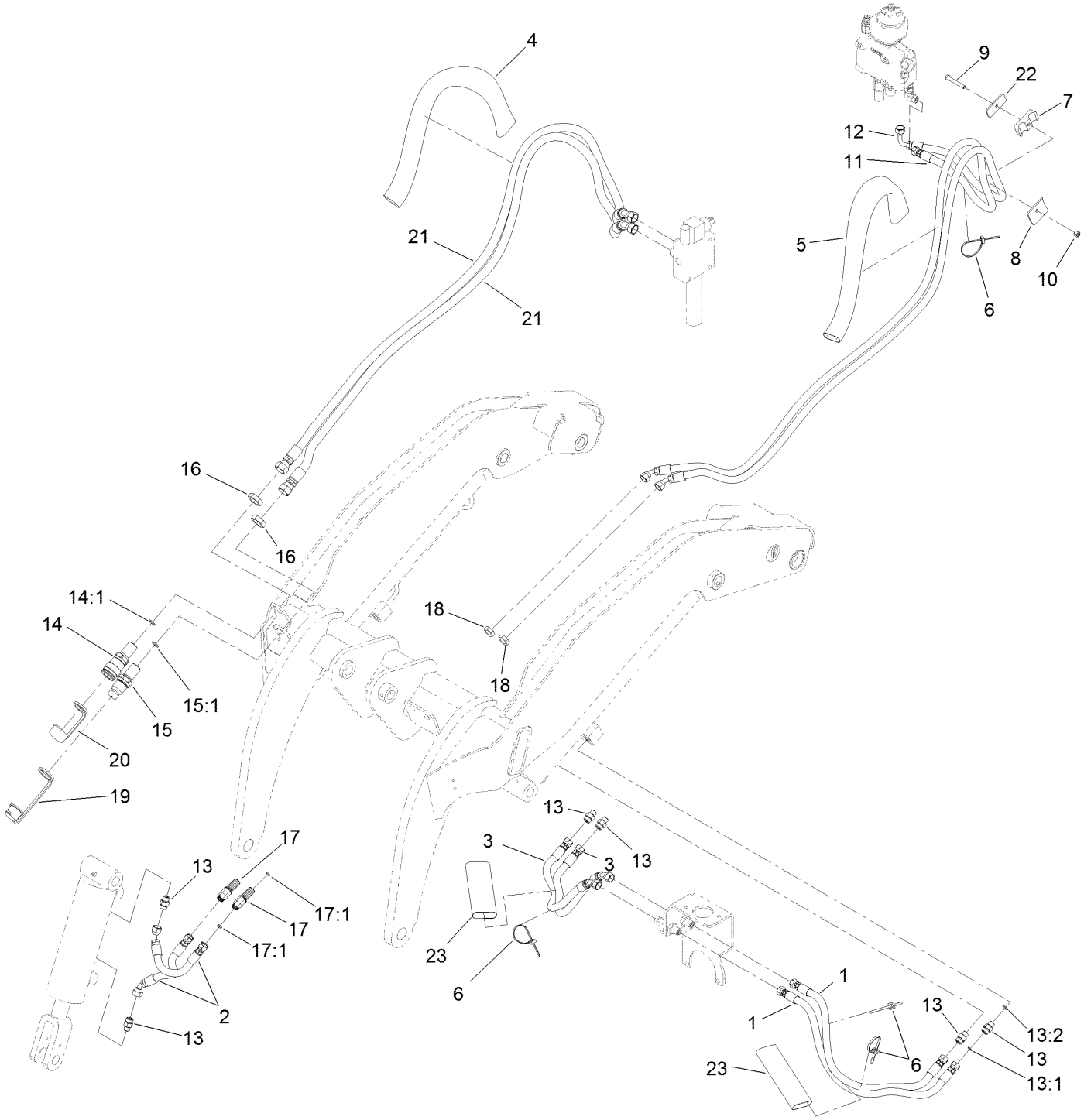

Loader Hydraulic Assembly (continued)

Ref.	Part Number	Qty.	Description
1	127-9639	2	Hose-HYD
2	127-9637	2	Hose-HYD
3	127-9638	2	Hose-HYD
4	130-7718	1	Sleeve-Protective
5	100-6128	1	Sleeve-Protective
6	3290-378	4	Tie-Cable
7	94-8105	2	Clamp-Tube
8	130-5221	2	Plate-Holddown, Hose
9	9114524	2	Bolt-TAP, HH
10	3296-29	2	Nut-Lock, NI
11	127-9633	1	Hose-HYD
12	130-7598	1	Hose-HYD
13	340-2	6	Fitting-Straight
13:1	237-22	1	O-Ring
13:2	237-42	1	O-Ring

Ref.	Part Number	Qty.	Description
14	105-8394	1	Bulkhead Coupler ASM
14:1	237-65	1	O-Ring
15	105-8395	1	Bulkhead Nipple ASM
15:1	237-65	1	O-Ring
15:2	100-6120	1	Seal Kit ●
16	340-74	2	Nut-Lock, Bulkhead
17	340-69	2	Elbow-Bulkhead, 45 DEG
17:1	237-22	2	O-Ring
18	340-70	2	Nut-Lock
19	100-8815	1	Cap-Dust, Nipple
20	100-8816	1	Cap-Dust, Coupler
21	127-9630	2	Hose-HYD
22	131-9152	2	Plate-Clamp, Hose
23	130-7749	2	Sleeve-Protective

● Not illustrated

Quick Attach Assembly

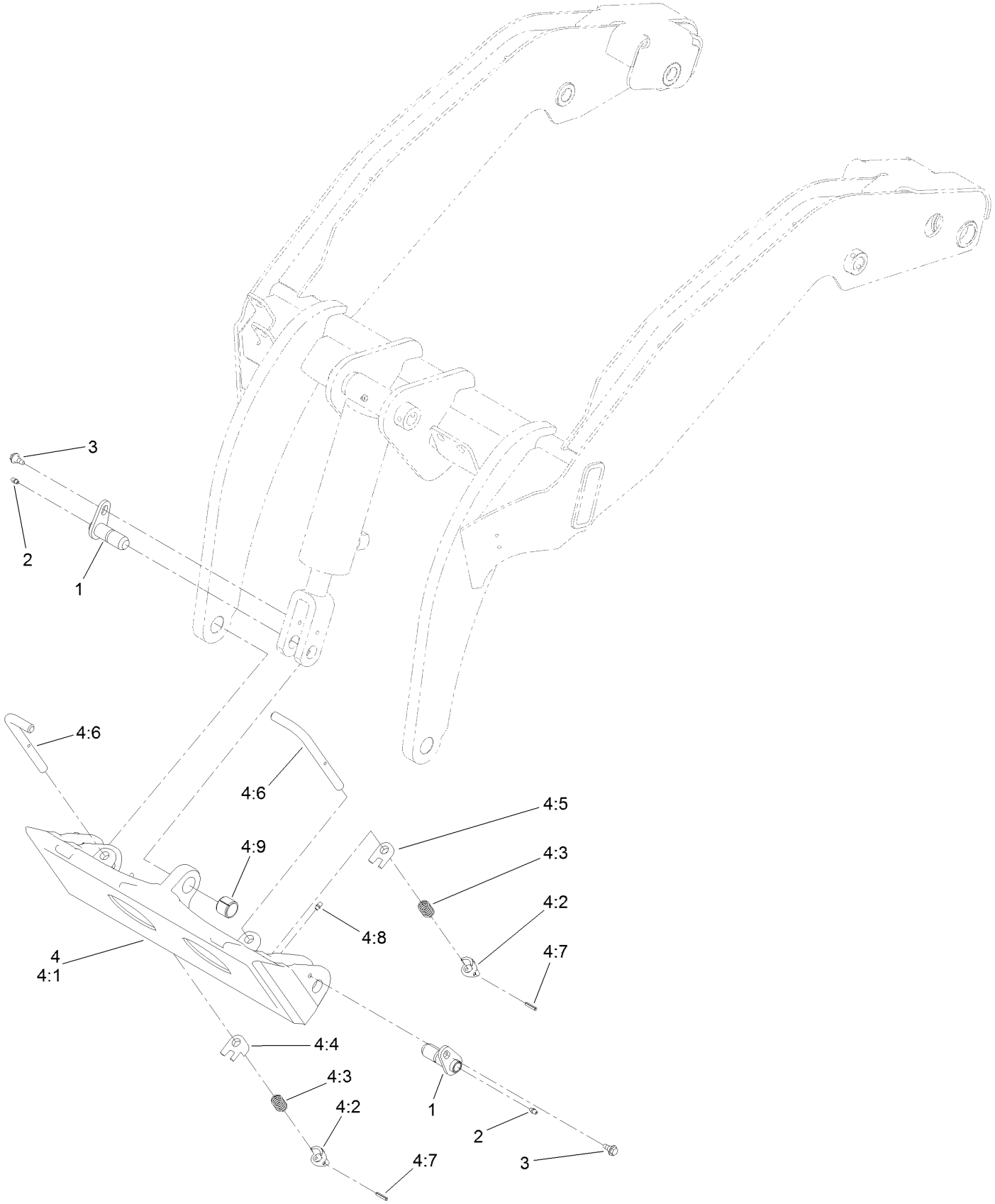

Quick Attach Assembly (continued)

Ref.	Part Number	Qty.	Description
1	130-5222	3	Pin-Pivot
2	302-5	3	Fitting-Grease
3	99-5105	3	Bolt-Shoulder
4	132-8418	1	Quick Attach ASM
4:1	130-7708-03	1	Mount-Qtach
4:2	105-0246	2	Cam
4:3	98-4694	2	Spring-Compression
4:4	104-5909	1	Stop-RH
4:5	104-5903	1	Stop-LH
4:6	132-8419	2	Pin-Locking
4:7	3285-1	2	Pin-Grooved
4:8	302-5	2	Fitting-Grease
4:9	98-4871	1	Bushing-Tension

Front Cover and Side Panel Assembly

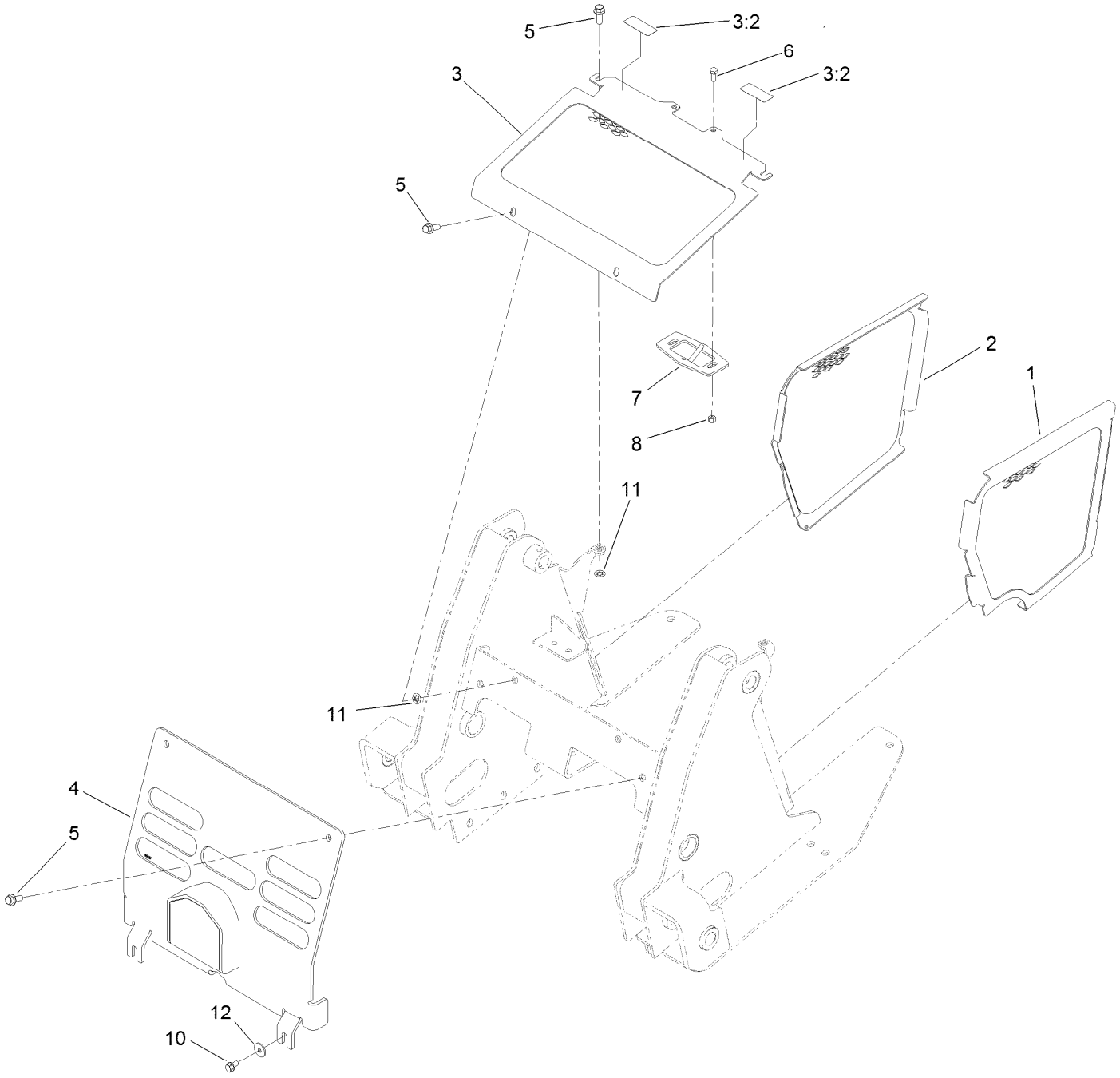

Front Cover and Side Panel Assembly (continued)

Ref.	Part Number	Qty.	Description
1	132-1734-03	1	Panel-Side, LH
2	132-1733-03	1	Panel-Side, RH
3	130-5324	1	Cover-Top
3:2	115-2047	2	Decal-Surface, Hot
4	131-9211-03	1	Cover-Front
5	3234-42	6	Screw-HHF

Ref.	Part Number	Qty.	Description
6	322-3	2	Screw-HH
7	130-5239-03	1	Hood Latch/Rod ASM
8	3296-29	2	Nut-Lock, NI
10	3234-14	2	Screw-HHF
11	107-3154	4	Nut-Push
12	115-7109	2	Washer-Flat

Hood Assembly

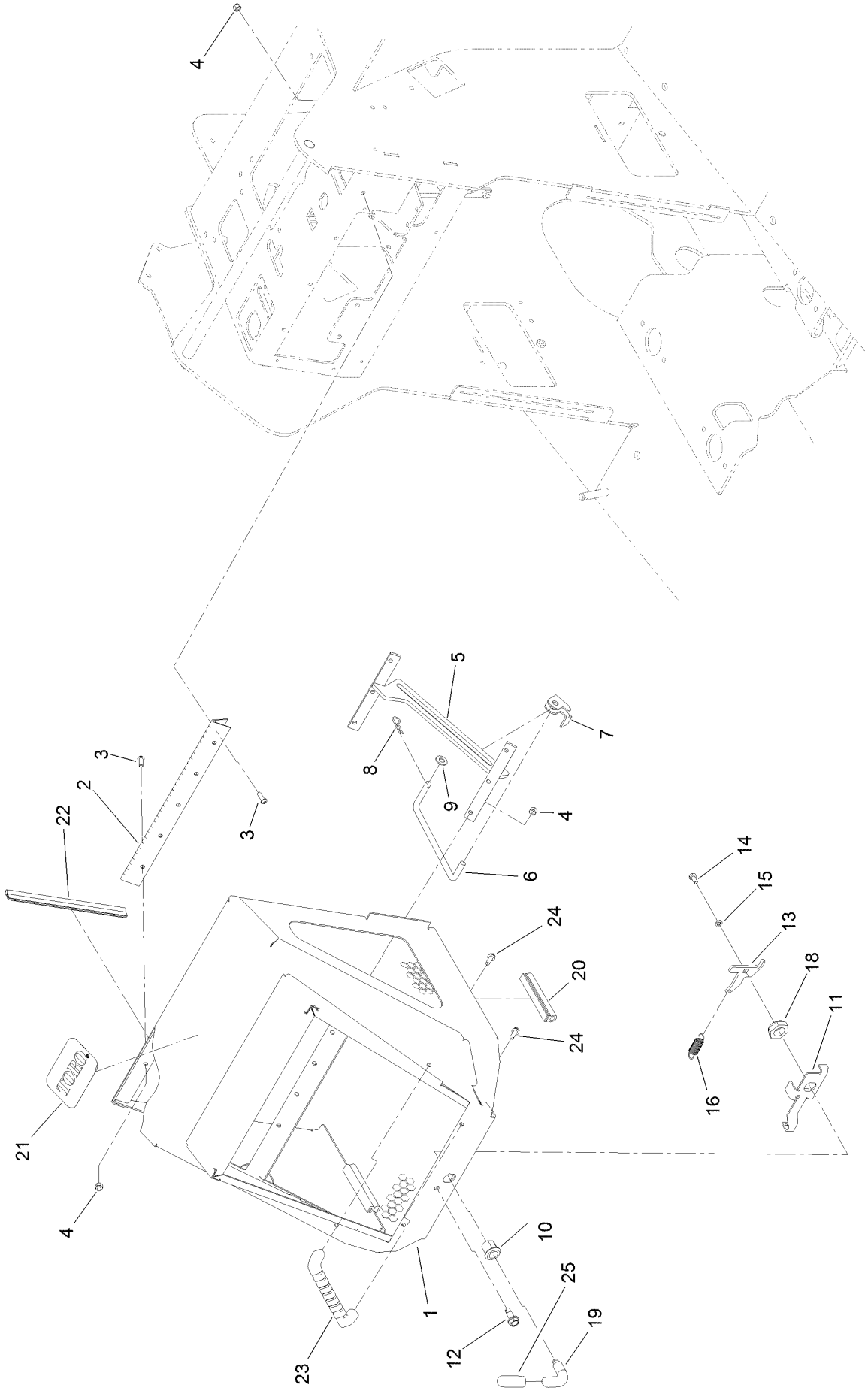

Hood Assembly (continued)

Ref.	Part Number	Qty.	Description
1	130-5298-03	1	Engine Hood ASM
2	100-1284	1	Hinge-Hood
3	3274-69	12	Screw-HSBH
4	3296-42	12	Nut-Lock, NI
5	130-5228-03	1	Bracket-Prop, Hood
6	108-6357	1	Rod-Support, Hood
7	115-0714	1	Bracket-Latch, Locking
8	3290-250	1	Pin-Cotter
9	3256-24	1	Washer-Flat
10	106-9335	1	Housing-Latch
11	130-5232-03	1	Bracket-Latch
12	105-6245	1	Screw-Tapping
13	130-5233	1	Cam-Hooked
14	321-2	1	Screw-HH
15	3253-3	1	Washer-Lock
16	104-0869	1	Spring
18	3296-60	1	Nut-Lock, NI
19	108-5639	1	Handle-Latch
20	130-5248	2	Pad-Hood
21	117-0871	1	Decal
22	130-5345	1	Trim-Seal, Bulb
23	65-5100	2	Handle-Door
24	46-8091	4	Screw-HWH
25	133-0206	1	Grip-Lever, Hood

Manual Tube Assembly

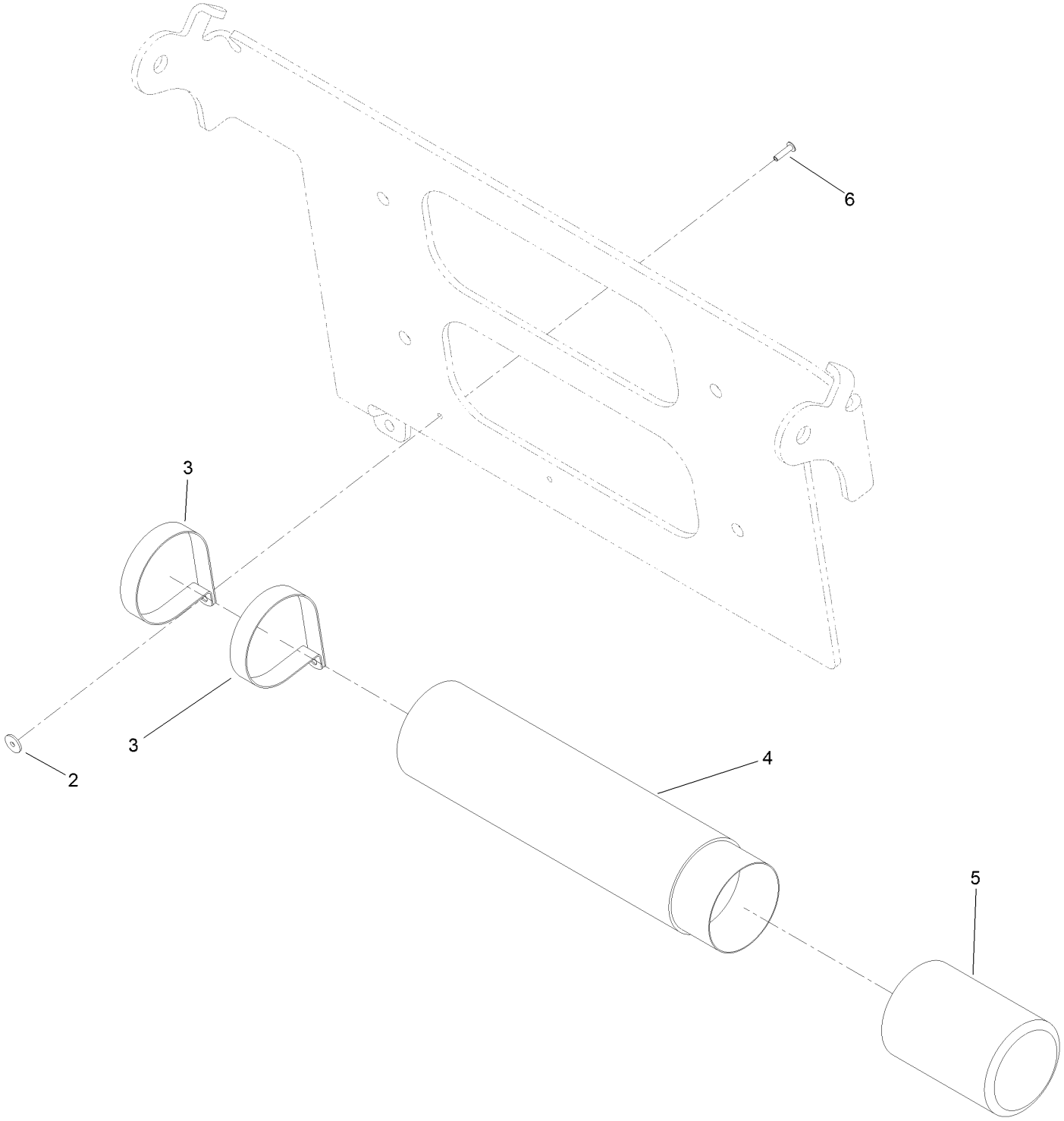

Manual Tube Assembly (continued)

Ref.	Part Number	Qty.	Description
2	3269-10	2	Washer-Back
3	2412-120	2	Clamp-R
4	104-7050	1	Tube-Manual
5	104-7048	1	Cap-Housing
6	3269-17	2	Rivet-Pop

Platform and Cushion Assembly

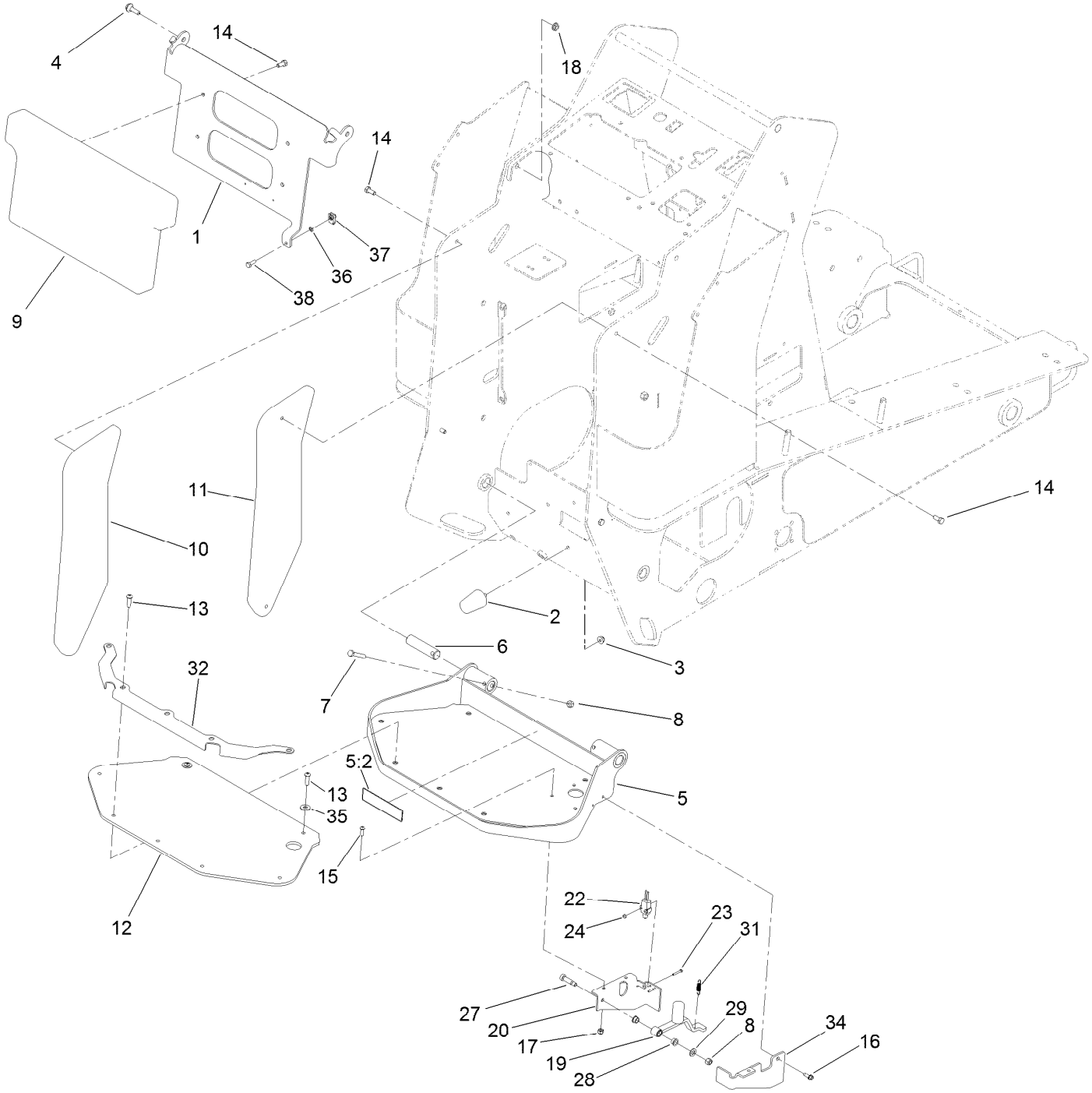

Platform and Cushion Assembly (continued)

Ref.	Part Number	Qty.	Description
1	132-6026-03	1	Hinge-Pad
2	110-5070	3	Bumper
3	104-8300	3	Nut-HF, NI
4	108-3744	2	Screw-Shoulder
5	130-5322	1	Platform
5:2	131-0709	1	Decal-Parking Brake
6	125-3749	2	Pin-Pivot
7	322-10	2	Screw-HH
8	3296-29	3	Nut-Lock, NI
9	130-1042	1	Cushion-Pad
10	130-1043	1	Cushion-Pad
11	130-1044	1	Cushion-Pad
12	130-1054	1	Pad-Foot
13	109-4872	7	Screw-HSH
14	322-3	8	Screw-HH
15	3274-69	3	Screw-HSBH
16	32104-95	1	Screw-HWH
17	3296-42	3	Nut-Lock, NI
18	32128-20	2	Nut-HF
19	130-5293	1	Lever-Switch, Auxiliary
20	130-5310-03	1	Bracket-Switch, LH
22	95-8900	1	Switch
23	32105-9	2	Screw
24	3296-9	2	Nut-Hex
27	114-8629	1	Bolt-Shoulder
28	1-603735	2	Bushing-Flanged
29	3256-45	1	Washer-Flat
31	59-3660	1	Spring
32	130-5313-03	1	Plate-Clamp
34	130-5311-03	1	Bracket-Switch, RH
35	3256-3	2	Washer-Flat
36	1-803037	1	Nut-Retaining
37	107069	1	Clip
38	321-4	1	Screw-HH

Electrical Assembly

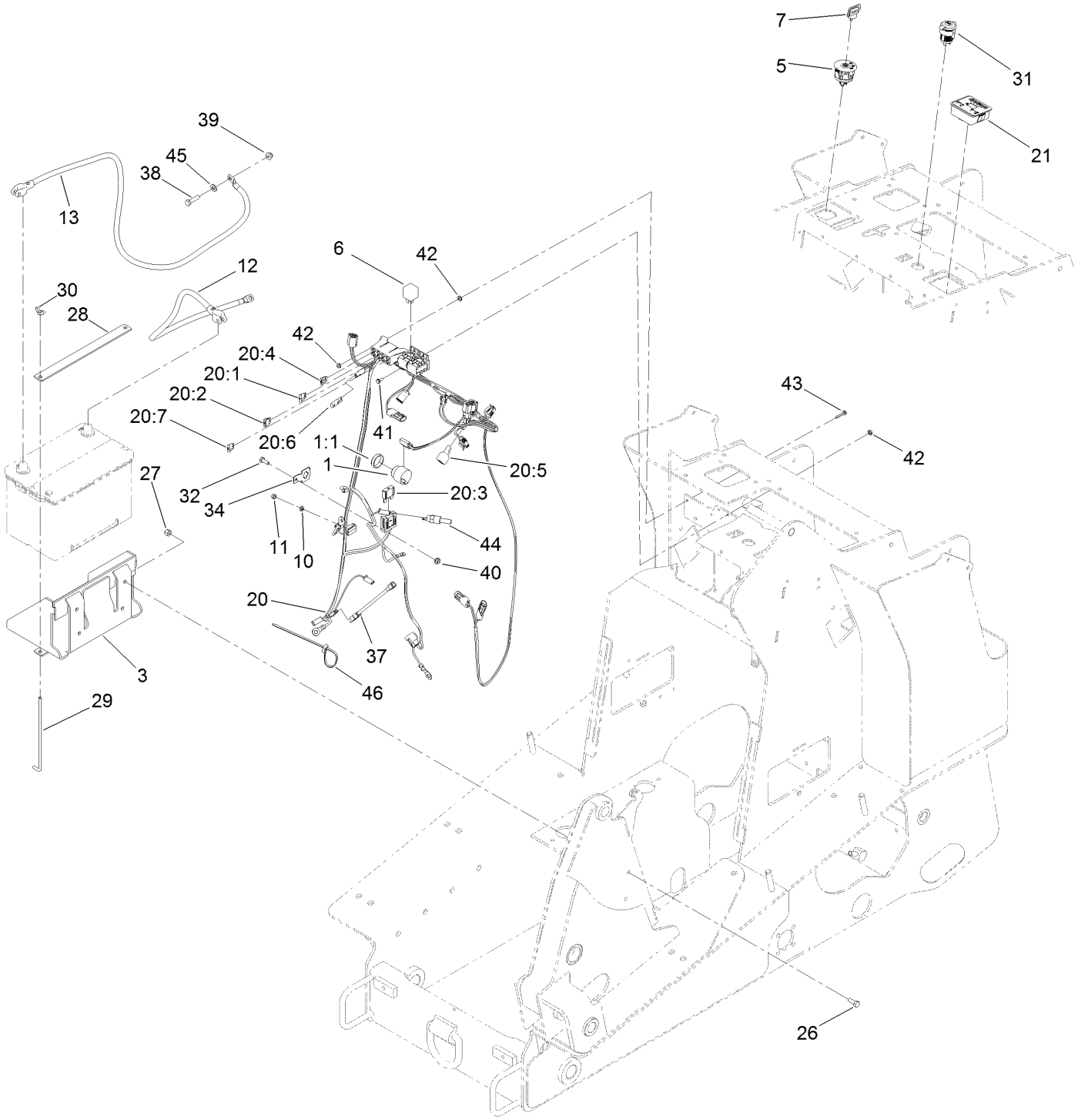

Electrical Assembly (continued)

Ref.	Part Number	Qty.	Description
1	80-9330	1	Audio Alarm ASM
1:1	104-5107	1	Nut-Plastic, Knurled
3	130-5236-03	1	Tray-Battery
5	110-6764	1	Switch-Ignition
6	1-643275	2	Relay
7	63-8360	2	Key-Ignition
10	43-5930	1	Washer-Lock, Spring
11	43-2830	1	Nut-Hex
12	105-0114	1	Cable-Battery, Positive
13	104-0761	1	Cable-Negative
20	127-9605	1	Harness-Wire
20:1	218-578	1	Fuse-Blade, 10 Amp
20:2	109355	1	Fuse-Blade, 15 Amp
20:3	94-8002	1	Fuse-Blade, 50 Amp
20:4	114241	1	Fuse-Blade, 7.5 Amp
20:5	103-3895	1	Diode
20:6	116-0053	1	Cap-Plug
20:7	109101	1	Fuse-Blade, 20 Amp
21	130-7635	1	Module-Hour Meter

Ref.	Part Number	Qty.	Description
26	322-4	4	Screw-HH
27	3296-29	4	Nut-Lock, NI
28	131-9177-03	1	Strap-Hold Down, Battery
29	130-5220	2	Rod-Hold Down, Battery
30	1-803038	2	Wingnut
31	109-9376	1	Receptacle-12V
32	321-4	1	Screw-HH
34	114-5502	1	Clip-Fuse
37	112-2463	1	Harness-Link, Fusible
38	322-6	1	Screw-HH
39	104-8300	1	Nut-HF, NI
40	32128-33	1	Nut-HF
41	3290-321	2	Screw-HWH
42	32149-7	6	Nut-Keps
43	117-1701	2	Screw-HWHTF
44	98-3825	1	Switch-Temp
45	3256-23	1	Washer-Plain
46	3290-378	1	Tie-Cable

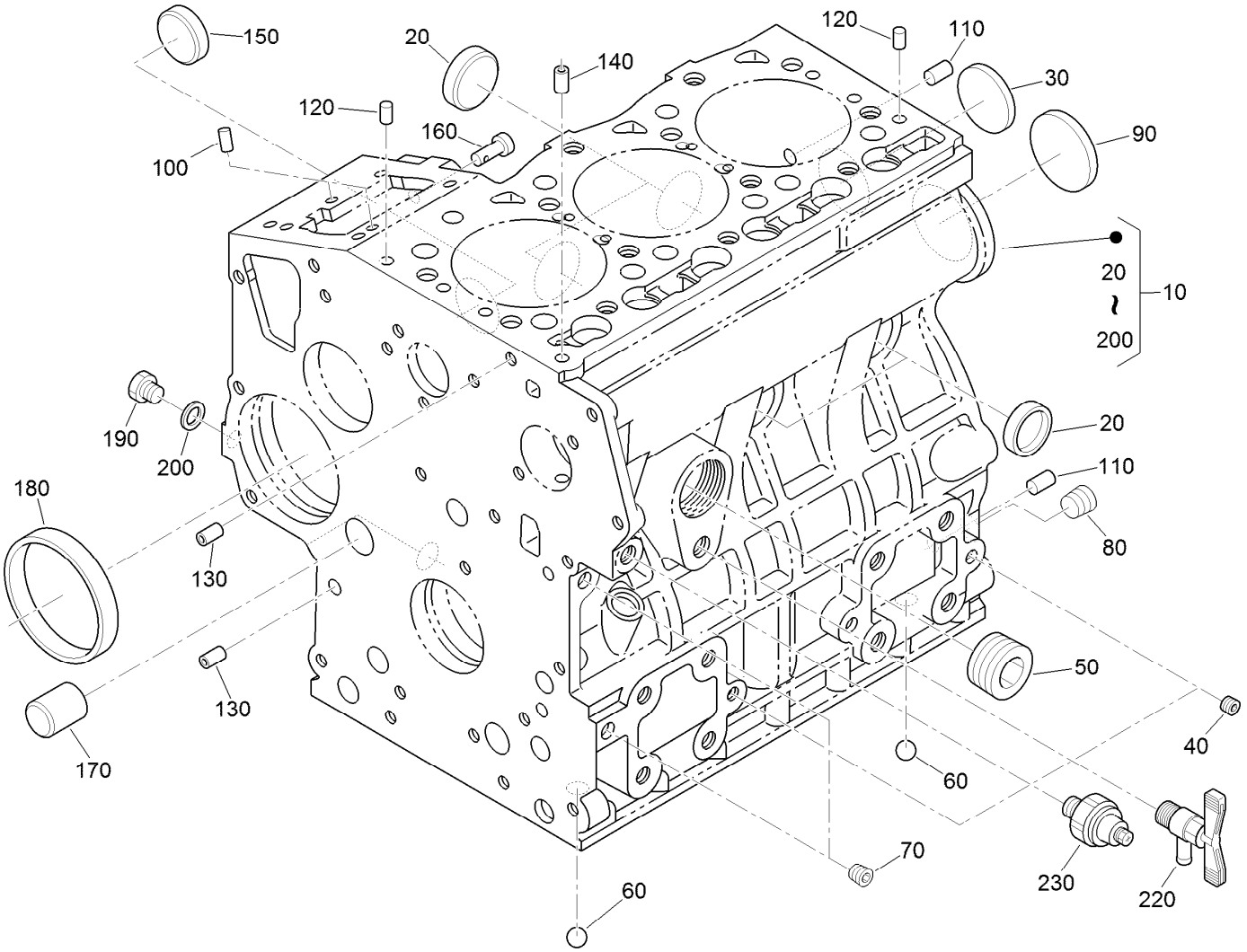

Crankcase Assembly

Ref.	Part Number	Qty.	Description
10	117-8800	1	Crankcase ASM
20	98-9398	4	Cap-Sealing
30	98-7539	1	Cap-Sealing
40	98-7540	6	Plug
50	105-3779	1	Plug
60	98-9380	2	Ball
70	98-7487	2	Plug
80	98-7488	1	Plug
90	98-9668	1	Plug-Expansion
100	98-9375	2	Pin-Straight
110	98-9377	2	Pin-Straight

Ref.	Part Number	Qty.	Description
120	98-9376	2	Pin-Straight
130	98-9387	2	Pin-Pipe
140	98-9539	1	Pin-Pipe
150	98-9599	1	Plug
160	98-9630	1	Pin-Spring, Start
170	98-9675	1	Plug
180	98-9656	1	Bushing-Governor, Gear
190	120-2559	1	Plug
200	98-7428	1	Gasket
220	131-9563	1	Cock ASM
230	98-9416	1	Switch-Oil

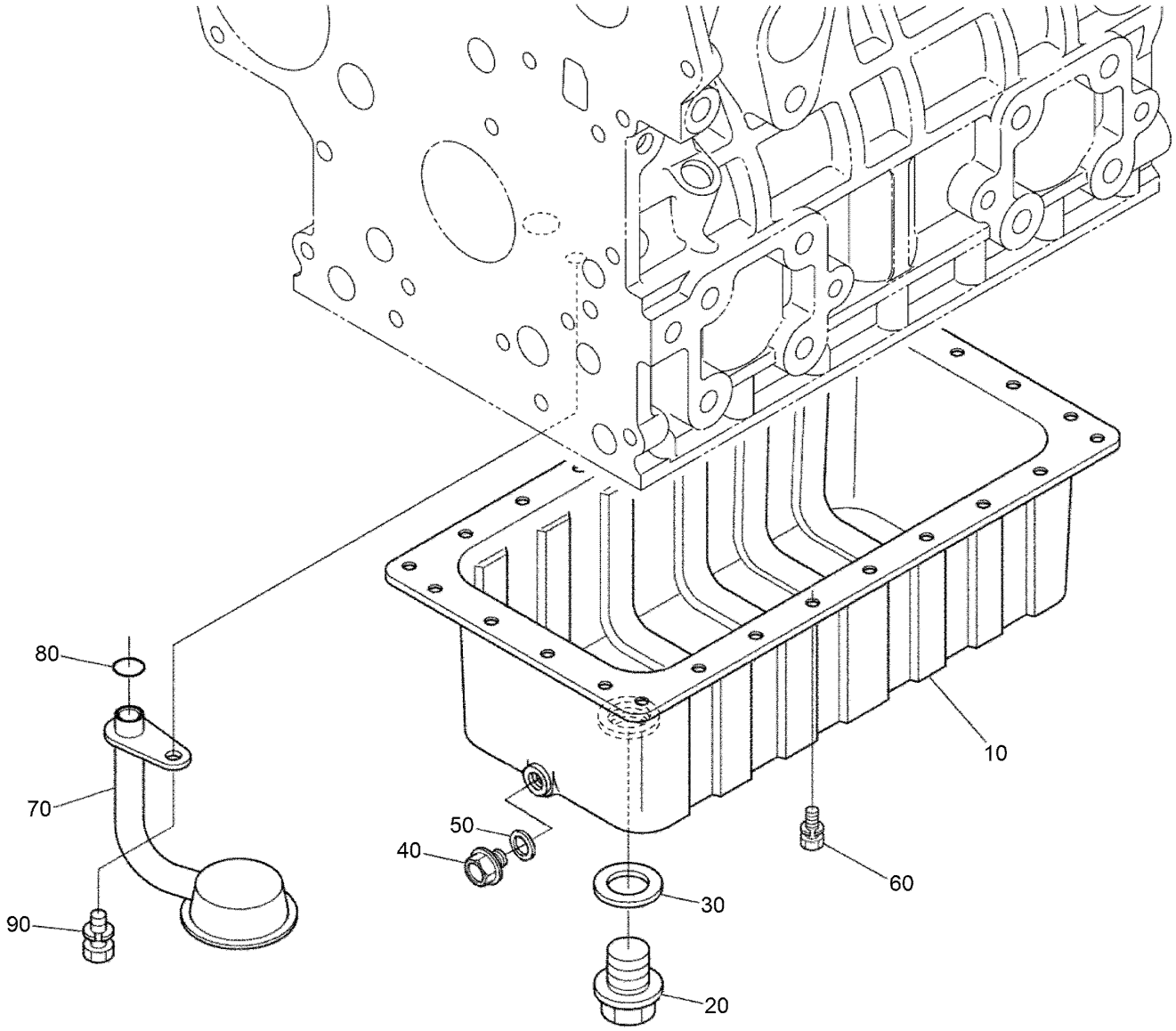

Oil Pan Assembly

Ref.	Part Number	Qty.	Description
10	132-4940	1	Oil Pan ASM
20	98-9686	1	Plug-Drain
30	110-9715	1	Gasket-Pan, Oil
40	114-8151	1	Plug-Drain
50	98-7524	1	Gasket
60	98-9351	26	Bolt
70	132-4939	1	Screen-Filter, Oil
80	105-3776	1	O-Ring
90	98-7526	1	Bolt

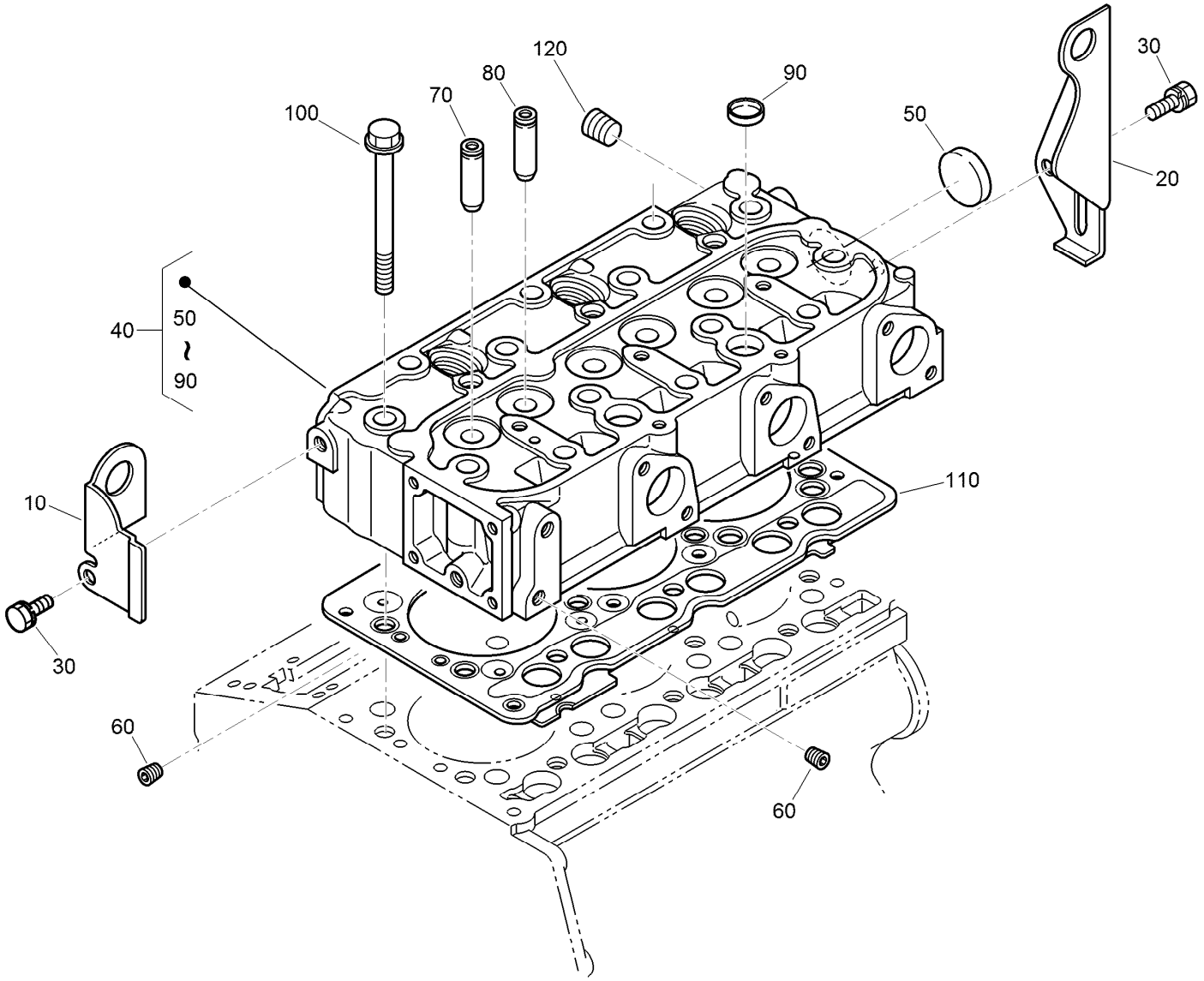

Cylinder Head Assembly

Ref.	Part Number	Qty.	Description
10	130-1231	1	Hook-Engine
20	98-9478	1	Hook-Engine
30	AU126123A1	2	Bolt
40	117-8802	1	Cylinder Head ASM
50	105-3705	1	Cap-Sealing
60	98-7540	2	Plug
70	107-9066	3	Guide-Valve, Inlet
80	107-9067	3	Guide-Valve, Exhaust
90	98-9389	2	Cap-Sealing
100	98-9479	14	Bolt-Head, Cylinder
110	108-6573	1	Gasket-Head, Cylinder
120	98-9444	1	Plug

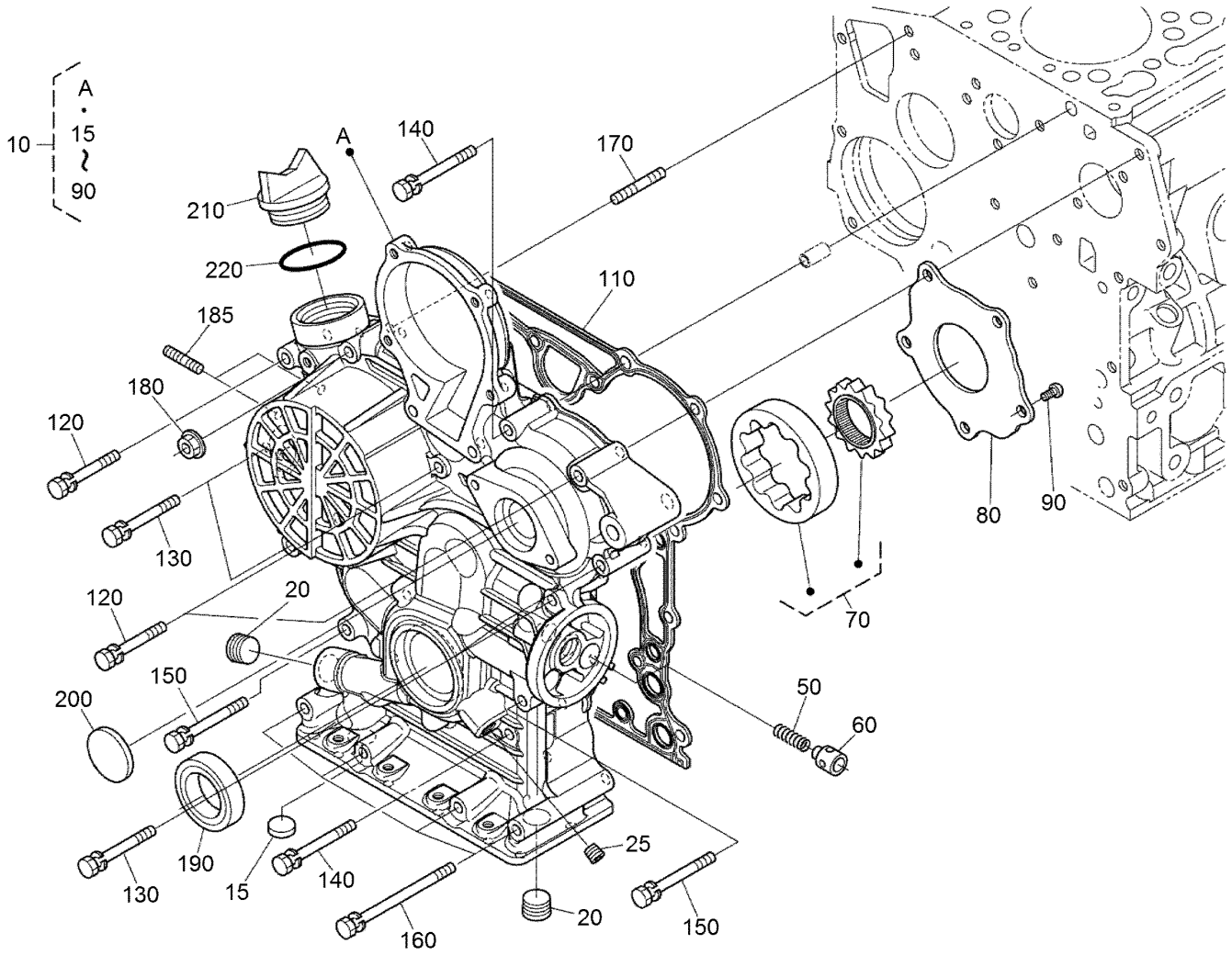

Gear Case Assembly

Ref.	Part Number	Qty.	Description
10	117-8803	1	Gear Case ASM
15	117-8804	1	Cap-Sealing
20	127-0425	2	Plug
25	98-7487	1	Plug
50	130-1511	1	Spring
60	130-1510	1	Valve-Relief
70	130-1508	1	Rotor ASM
80	130-1509	1	Cover-Pump, Oil
90	130-1164	5	Screw-Binding
110	117-8835	1	Gasket-Case, Gear
120	107-9073	3	Bolt

Ref.	Part Number	Qty.	Description
130	125-9063	4	Bolt-Sems
140	98-9356	2	Bolt
150	100-1766	2	Bolt
160	107-9090	4	Bolt
170	105-3709	1	Stud
180	100-2203	1	Nut-Flange
185	105-3710	2	Stud
190	119-8038	1	Seal-Oil
200	98-9641	1	Cover-Case, Gear
210	107-9075	1	Plug-Filler, Oil
220	99-3446	1	O-Ring

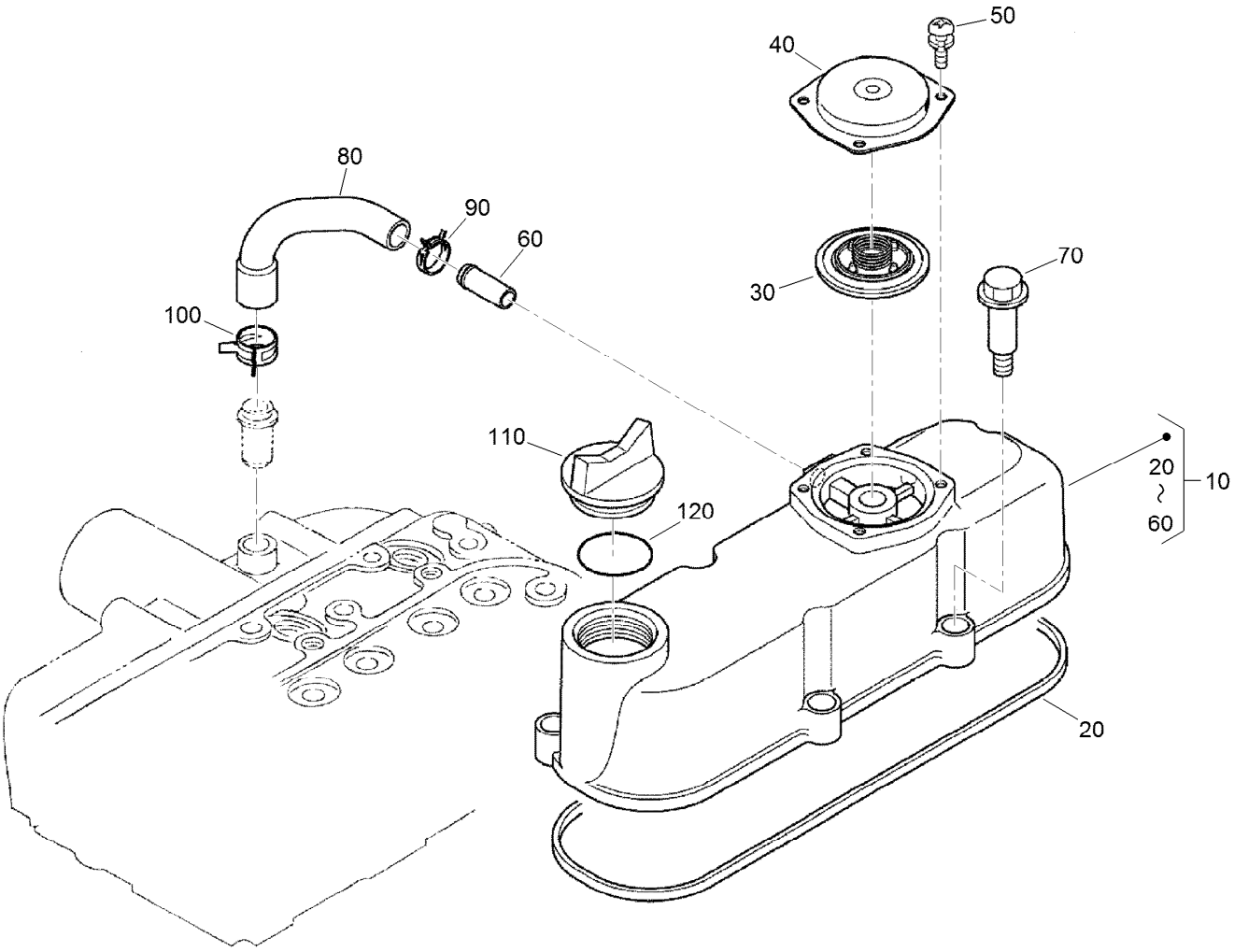

Cylinder Head Cover Assembly

Ref.	*Part Number*	*Qty.*	*Description*
10	117-8805	1	Cylinder Head Cover ASM
20	117-8806	1	Gasket-Cover, Head
30	110-3715	1	Valve-Breather
40	110-3714	1	Cover-Breather
50	98-9364	4	Screw (With Washer)
60	98-7766	1	Pipe-Return, Water
70	108-7063	5	Bolt
80	108-2858	1	Tube-Breather
90	108-2859	1	Clamp-Hose
100	108-2860	1	Clamp-Hose
110	107-9075	1	Plug-Filler, Oil
120	99-3446	1	O-Ring

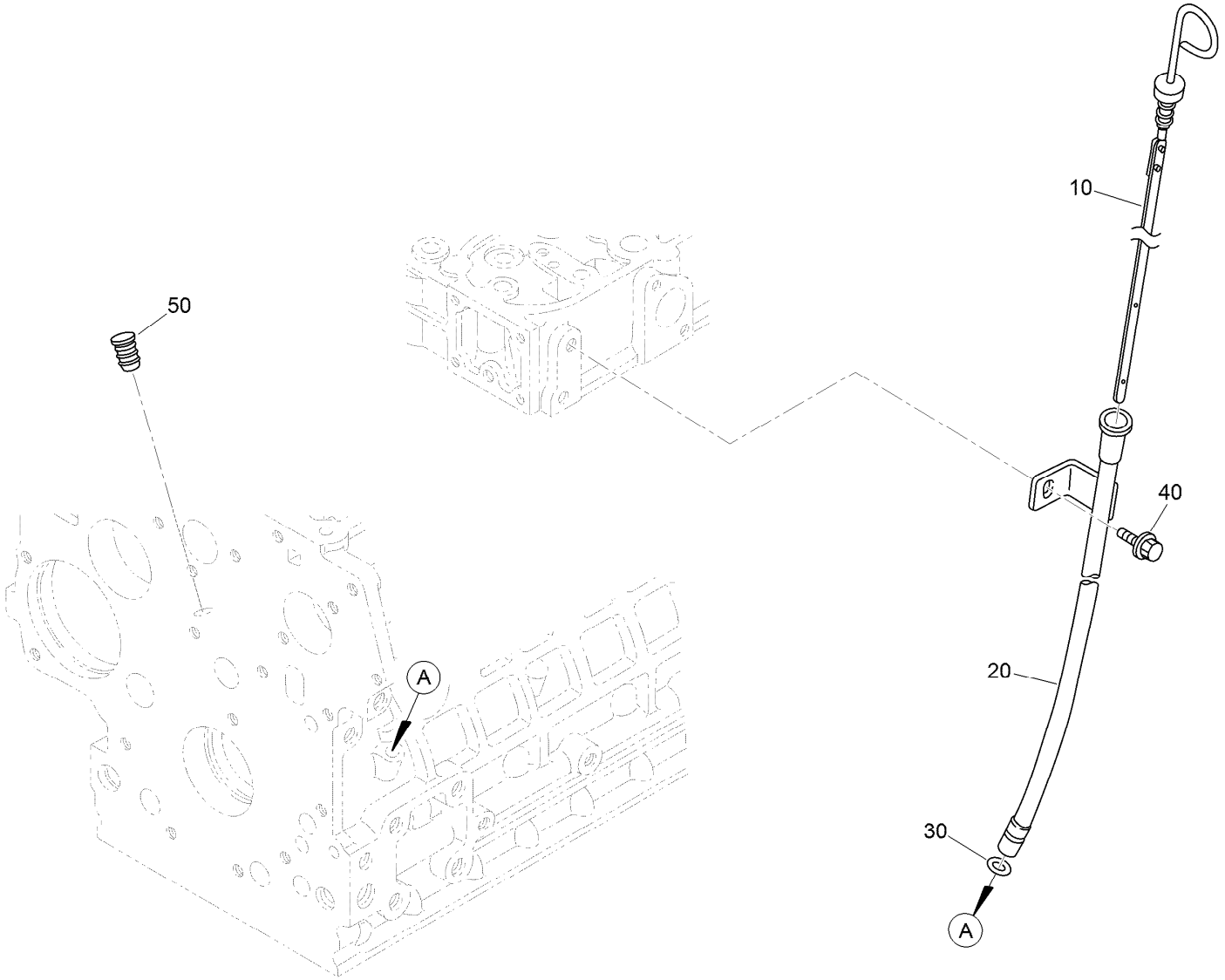

Dipstick and Guide Assembly

Ref.	*Part Number*	*Qty.*	*Description*
10	132-4941	1	Gauge-Oil
20	132-4942	1	Guide-Gauge, Oil
30	98-9722	1	O-Ring
40	AU126123A1	1	Bolt
50	110-3720	1	Plug-Gauge, Oil

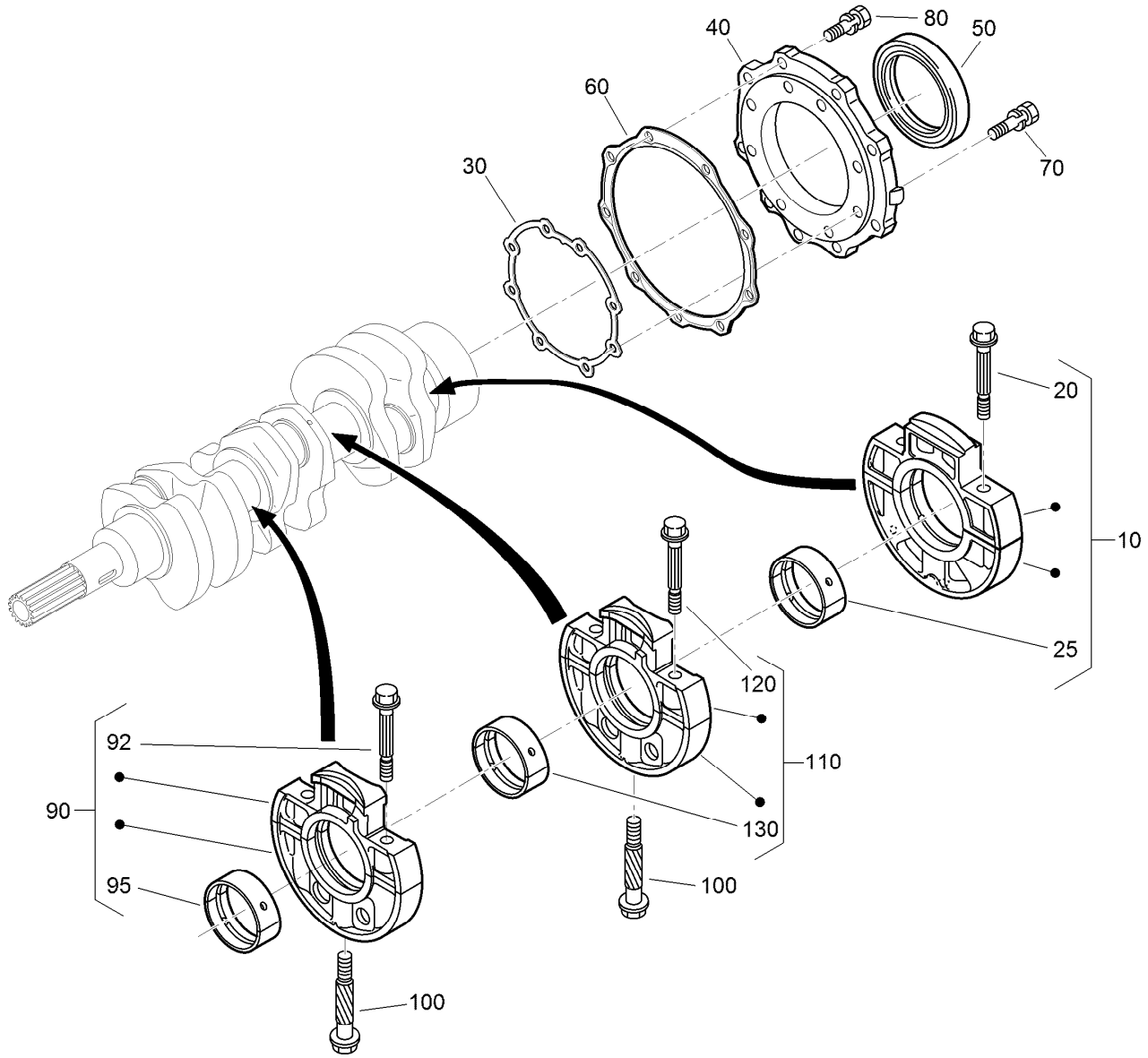

Main Bearing Case Assembly

Ref.	Part Number	Qty.	Description
10	112-7026	1	Wheel Bearing Case ASM
20	98-9484	2	Bolt-Case, Bearing
25	112-7045	1	Metal-Crankshaft
25	112-7039	1	Metal-Crankshaft (0.2Mm)
25	112-7040	1	Metal-Crankshaft (-0.4Mm)
30	131-6554	1	Gasket-Case, Bearing
40	112-7046	1	Cover-Case, Bearing
50	112-0180	1	Seal-Oil
60	112-7037	1	Gasket-Cover, Case
70	127-0441	8	Bolt
80	127-0442	9	Bolt

Ref.	Part Number	Qty.	Description
90	117-8809	1	Main Bearing Case ASM
92	98-9484	2	Bolt-Case, Bearing
95	117-8810	1	Metal-Crankshaft
95	117-8811	1	Metal-Crankshaft
95	117-8812	1	Metal-Crankshaft
100	98-9485	2	Bolt-Case, Bearing
110	117-8813	1	Main Bearing Case ASM
120	98-9484	2	Bolt-Case, Bearing
130	117-8810	1	Metal-Crankshaft
130	117-8811	1	Metal-Crankshaft
130	117-8812	1	Metal-Crankshaft

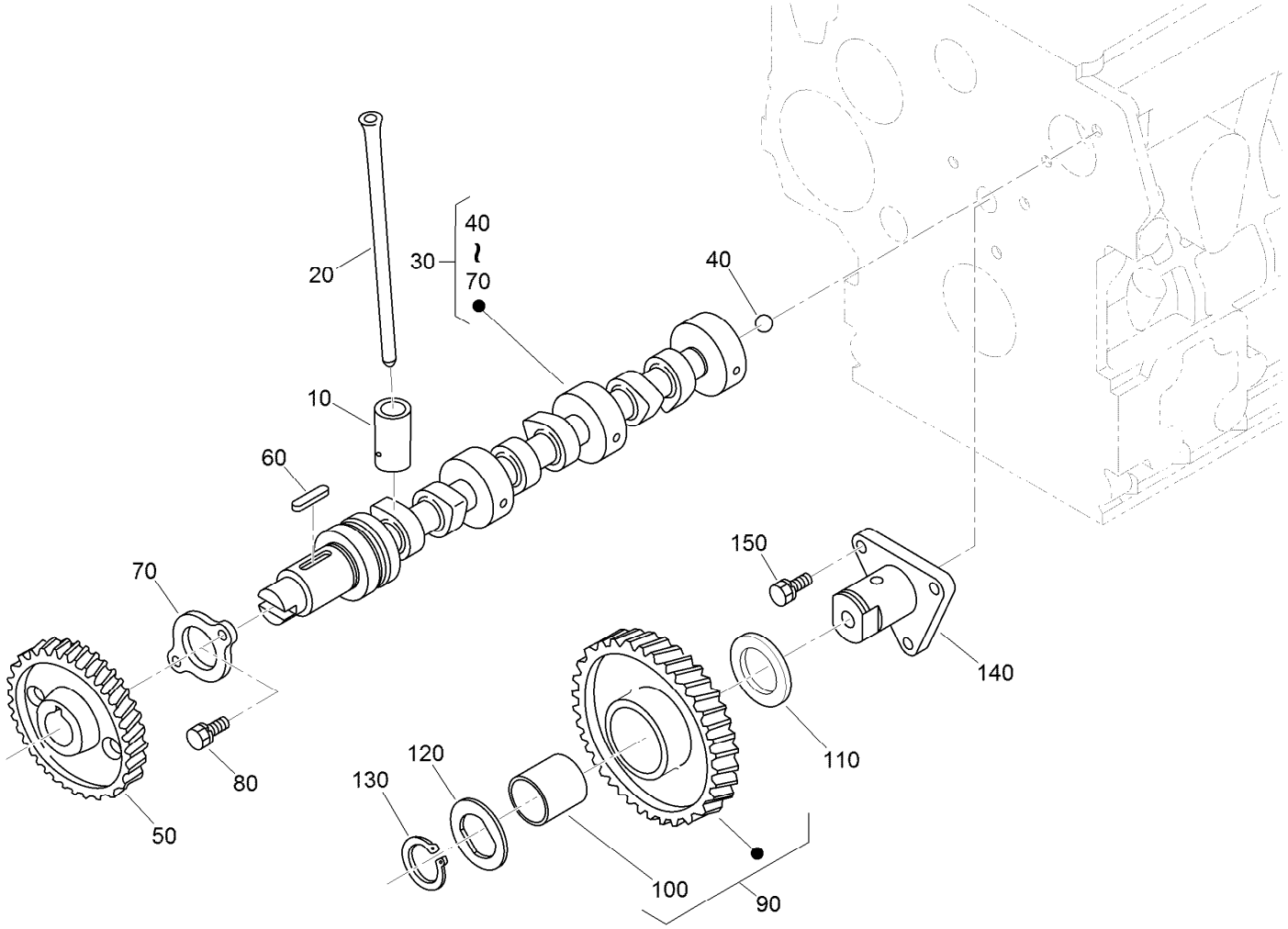

Camshaft and Idle Gear Shaft Assembly

Ref.	Part Number	Qty.	Description
10	112-0185	6	Tappet
20	117-8814	6	Rod-Push
30	130-1545	1	Camshaft ASM
40	110-3729	1	Ball
50	98-9512	1	Gear-Cam
60	98-9378	1	Key-Feather
70	131-6555	1	Stopper (Camshaft)
80	98-7692	2	Bolt
90	117-7584	1	Idler Gear ASM
100	117-7585	1	Bushing-Gear, Idle
110	98-9535	1	Collar-Gear, Idle
120	98-9536	1	Collar-Gear, Idle
130	98-9534	1	Circlip-Gear, Idle
140	98-9533	1	Shaft-Gear, Idle
150	98-7692	3	Bolt

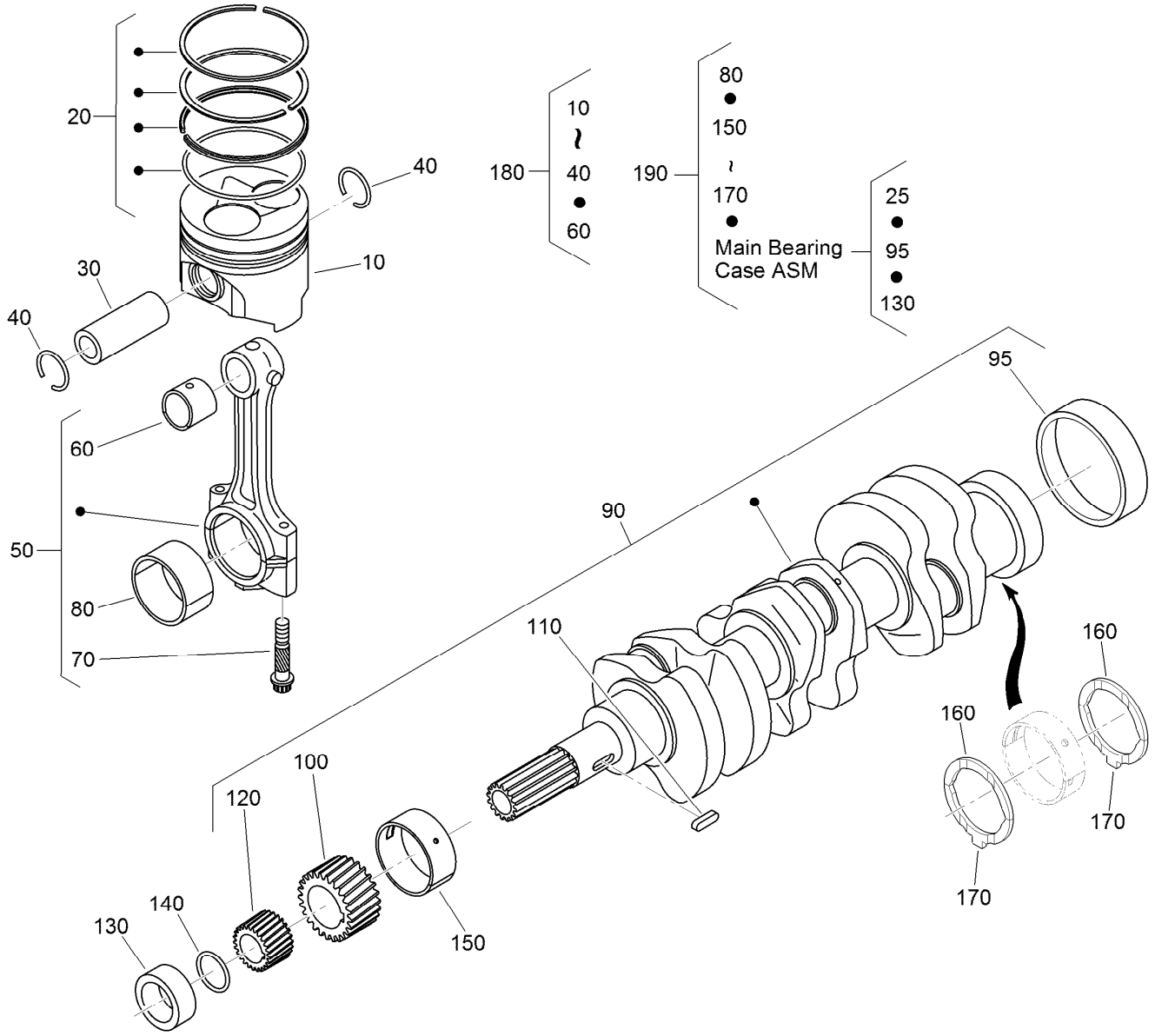

Piston and Crankshaft Assembly

Ref.	Part Number	Qty.	Description
10	130-1546	3	Piston (STD)
10	130-1549	3	Piston (+0.50Mm)
20	130-1506	3	Piston Ring ASM (STD)
20	130-1507	3	Piston Ring ASM (+0.50Mm)
30	98-9513	3	Pin-Piston
40	98-9514	6	Circlip-Pin, Piston
50	117-7586	3	Connecting Rod ASM
60	115-3014	3	Bushing-Pin, Piston
70	98-9517	6	Bolt-Rod, Connecting
80	98-9553	3	Bearing-Rod (STD)
80	98-9519	3	Bearing-Rod (-0.2Mm)
80	117-7588	3	Metal-Crankpin (-0.4Mm)
90	132-4944	1	Crankshaft ASM
95	98-9522	1	Sleeve-Crankshaft
100	117-7561	1	Gear-Crankshaft
110	98-9666	1	Key
120	127-0445	1	Gear-Drive, Oil Pump

Ref.	Part Number	Qty.	Description
130	127-0444	1	Collar-Crankshaft
140	105-3783	1	O-Ring
150	117-8818	1	Metal-Crankshaft
150	117-8819	1	Metal-Crankshaft
150	117-8820	1	Metal-Crankshaft
160	98-9413	2	Bearing-Thrust (STD)
160	127-0416	2	Metal-Side (+0.2Mm)
160	127-0417	2	Metal-Side (+0.40Mm)
170	98-9688	2	Bearing-Thrust (STD)
170	127-0437	2	Metal-Side (+0.2Mm)
170	127-0438	2	Metal-Side (+0.40Mm)
180	130-1547	3	Piston Kit
180	130-1548	3	Piston Kit
190	117-8823	1	Engine Metal Kit
190	117-8824	1	Engine Metal Kit
190	117-8825	1	Engine Metal Kit

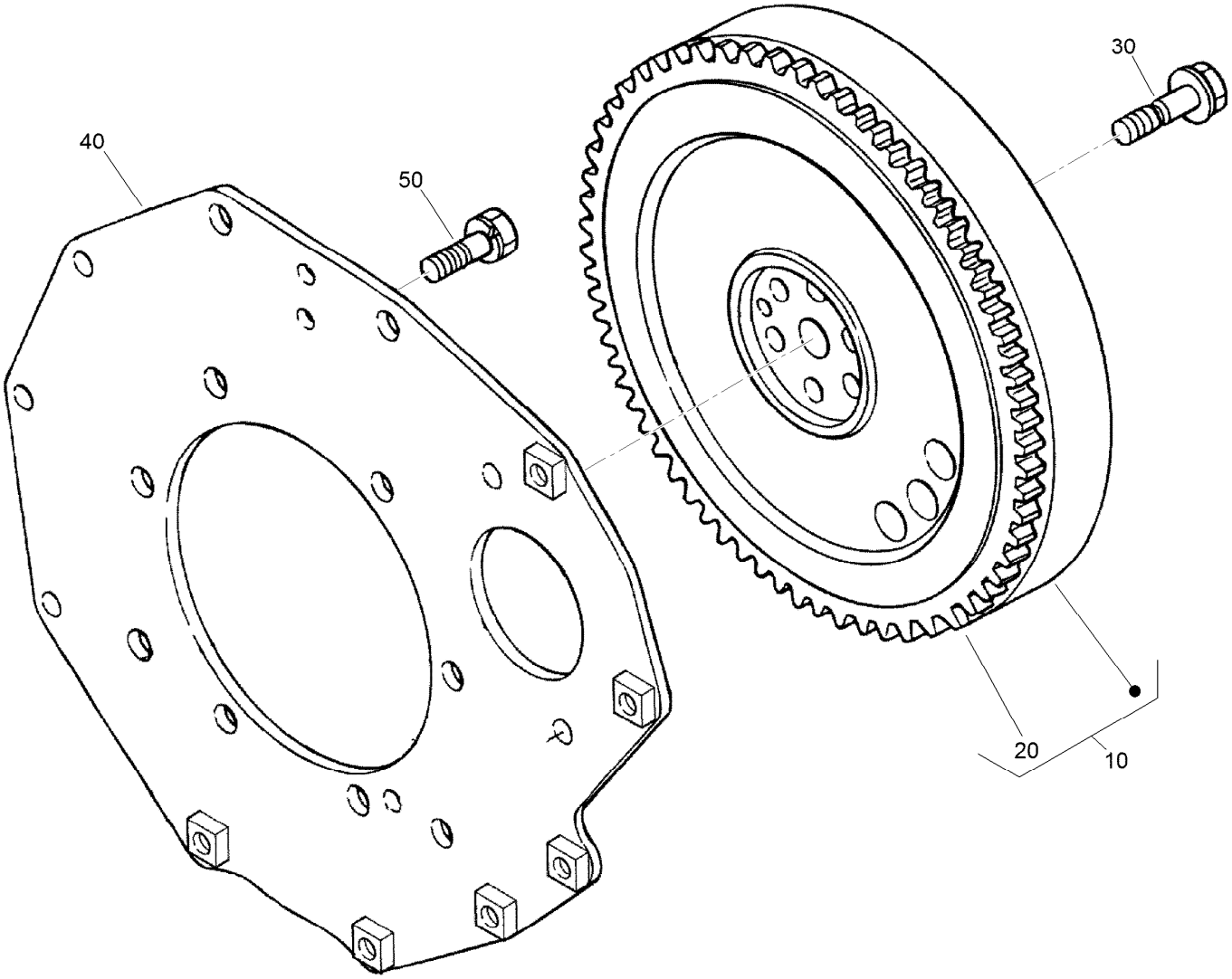

Flywheel Assembly

Ref.	Part Number	Qty.	Description
10	117-8826	1	Flywheel ASM
20	105-3722	1	Gear-Ring
30	98-9537	6	Bolt-Flywheel
40	98-9486	1	Plate-End, Rear
50	98-9392	8	Bolt

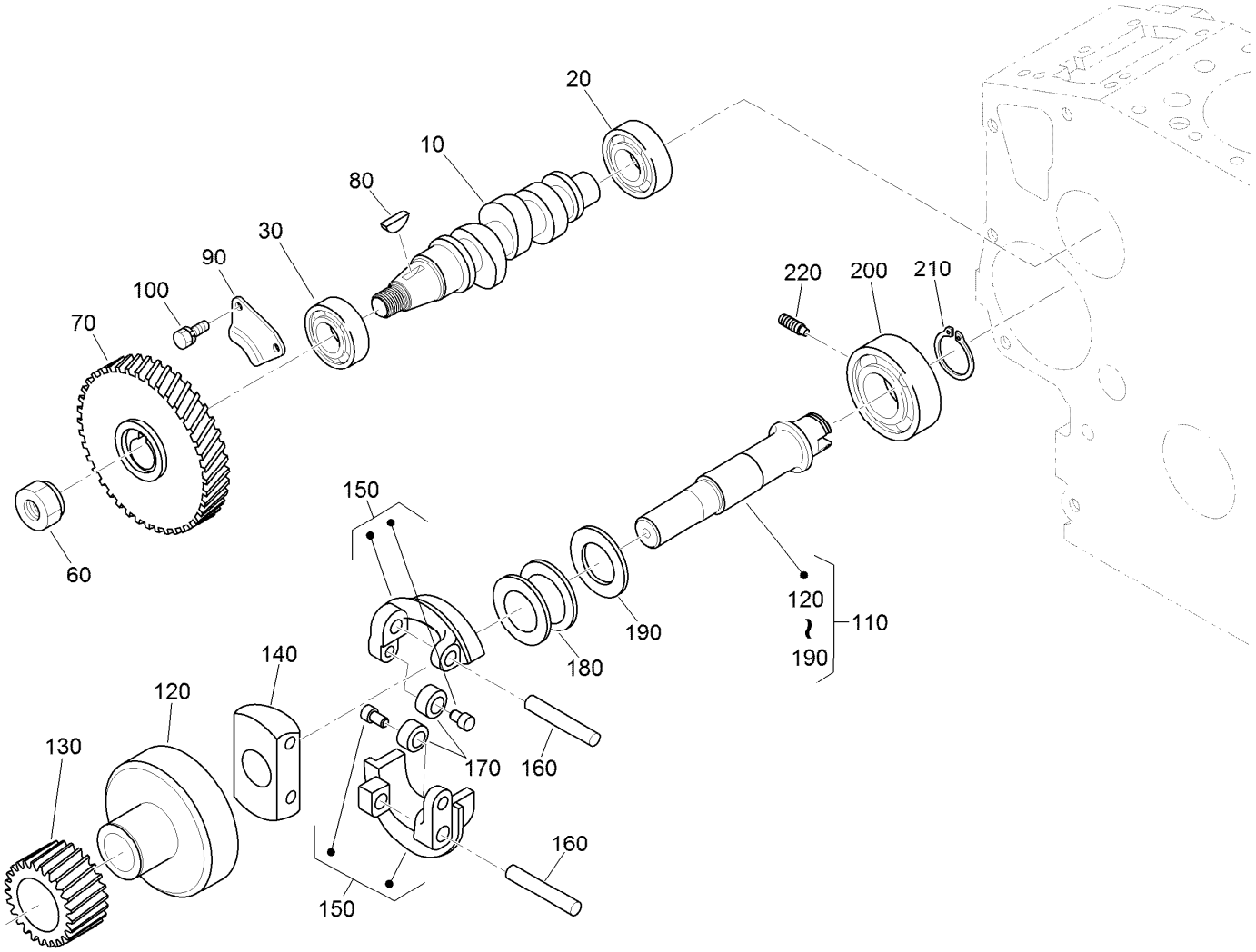

Fuel Camshaft and Governor Shaft Assembly

Ref.	Part Number	Qty.	Description
10	98-9459	1	Camshaft-Fuel
20	107-9077	1	Bearing-Ball
30	107-9078	1	Bearing-Ball
60	130-1512	1	Nut
70	130-1378	1	Gear-Injection Pump
80	98-9595	1	Key-Woodruff
90	98-9511	1	Stopper-Fuel, Camshaft
100	98-7692	2	Bolt
110	98-9644	1	Governor Shaft ASM
120	98-9562	1	Holder-Gear, Governor

Ref.	Part Number	Qty.	Description
130	98-9673	1	Gear-Governor
140	98-9561	1	Holder-Weight, Governor
150	130-1240	2	Governor Weight ASM
160	98-9560	2	Shaft-Weight, Governor
170	98-9692	2	Roller
180	98-9563	1	Sleeve-Governor
190	98-9564	1	Washer-Thrust
200	107-9079	1	Bearing-Ball
210	98-9657	1	Circlip-Shaft, Governor
220	98-9565	1	Screw-Set

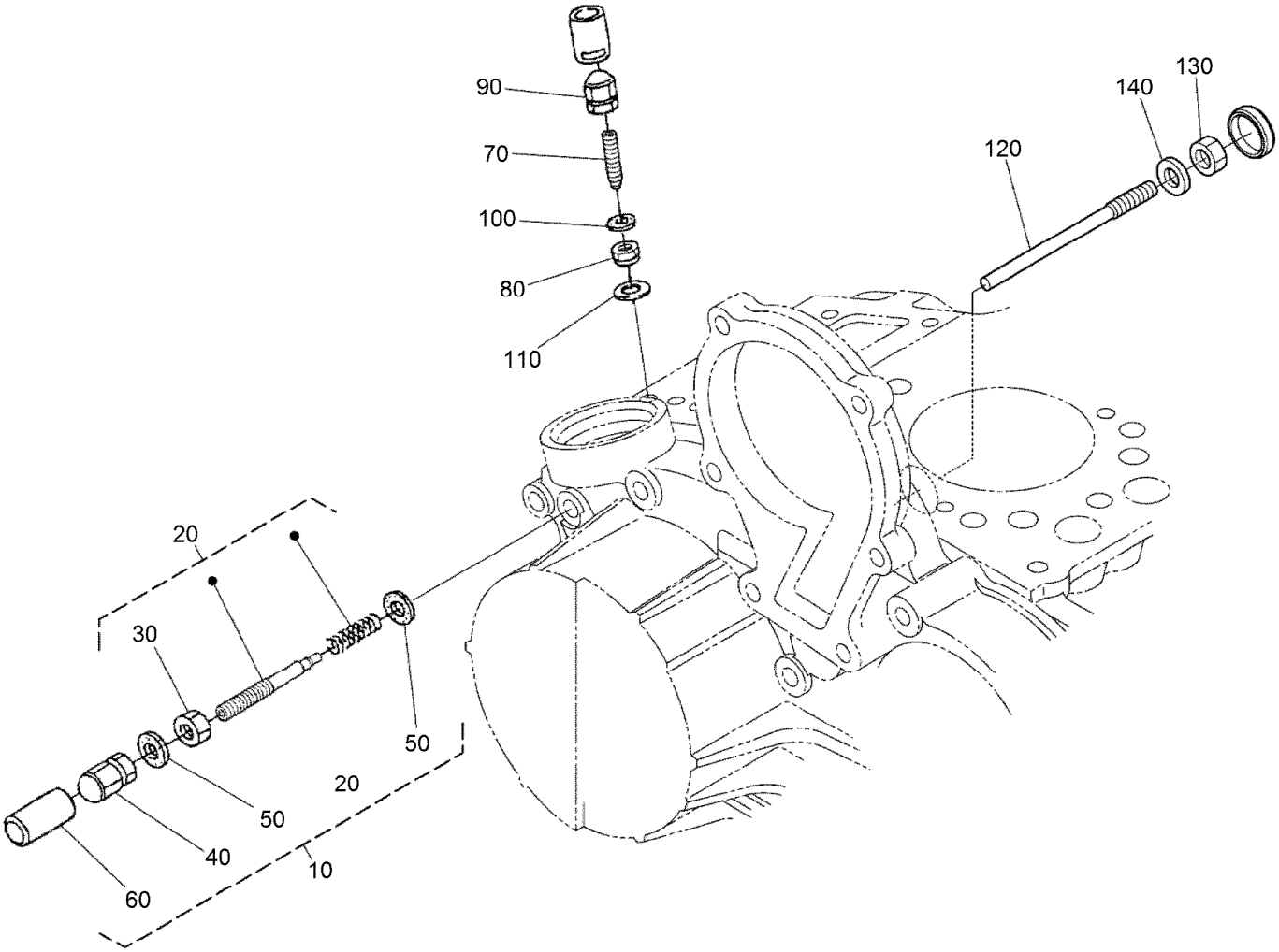

Idle Apparatus Assembly

Ref.	Part Number	Qty.	Description
10	132-4937	1	Apparatus-Idling
20	132-4938	1	Adjustment Bolt ASM
30	98-9439	1	Nut
40	112-0181	1	Nut
50	98-7654	2	Gasket
60	98-7656	1	Cap
70	112-7015	1	Bolt-Adjusting
80	100-2175	1	Nut-Lock
90	112-0181	1	Nut
100	98-7654	2	Gasket
110	107-9081	1	Gasket
120	131-6556	1	Bolt
130	98-7572	1	Nut
140	98-7654	1	Gasket

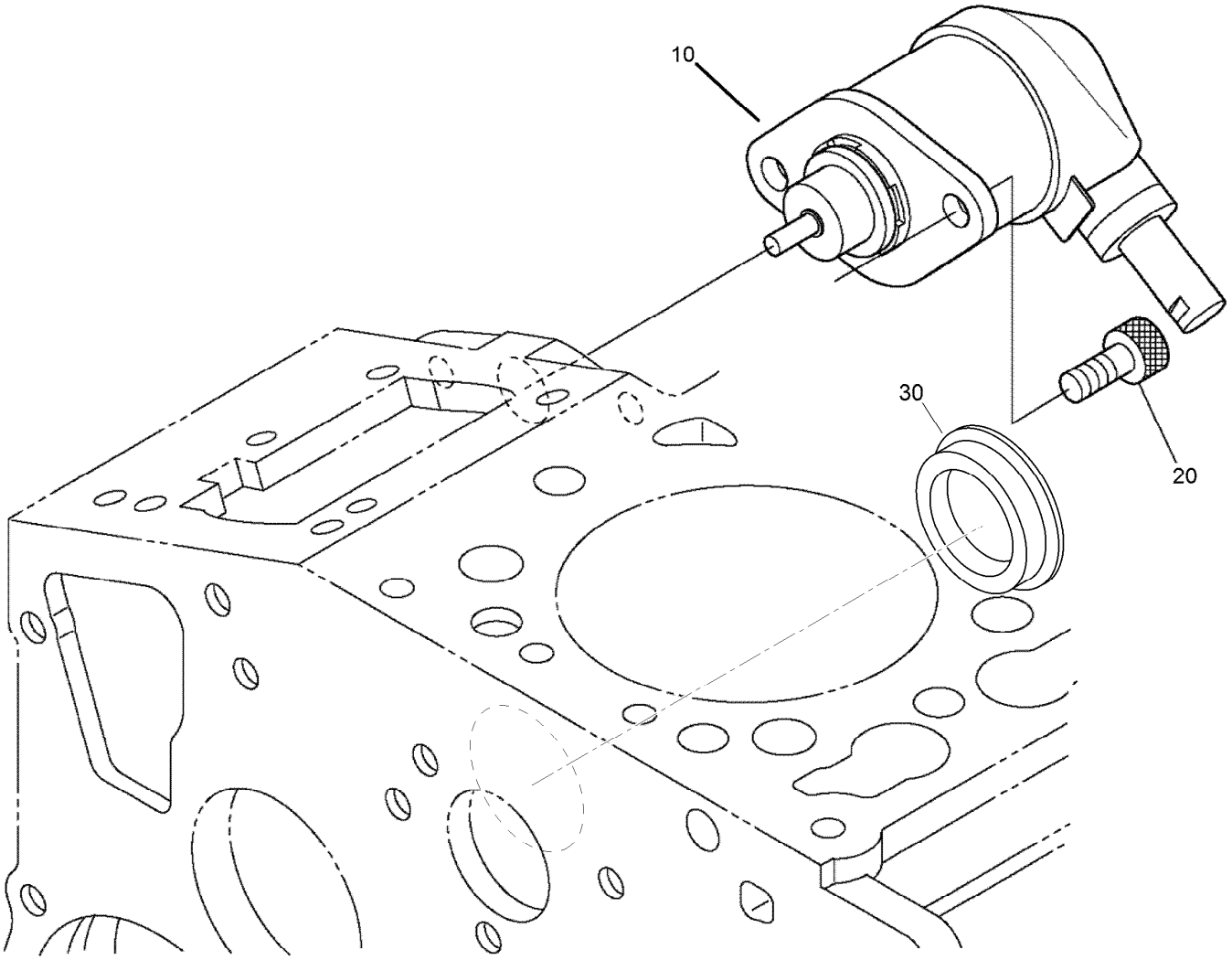

Stop Solenoid Assembly

Ref.	Part Number	Qty.	Description
10	104-5155	1	Solenoid-Stop
20	130-1155	2	Screw-HSH
30	112-7016	1	Cover-Pump

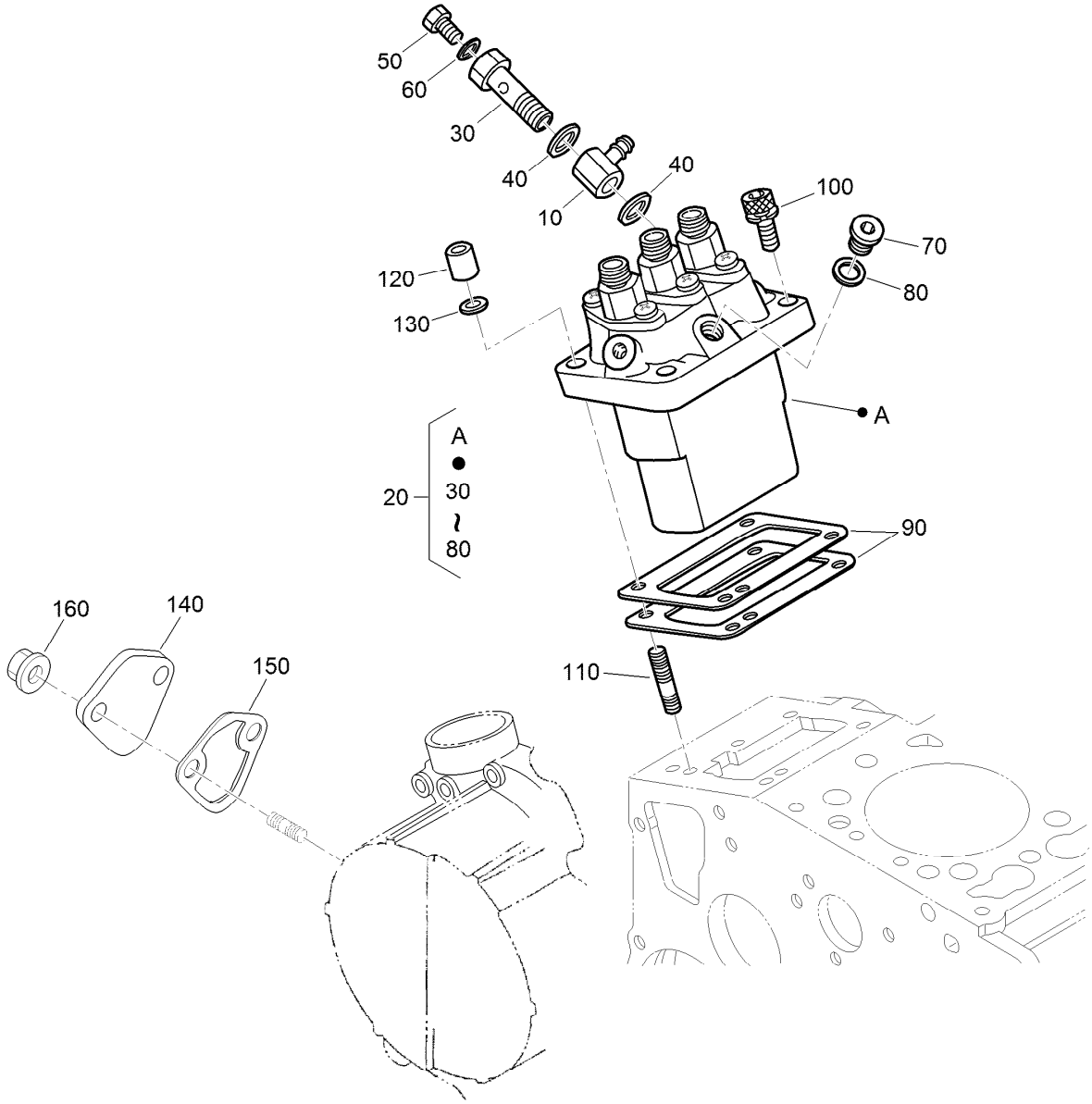

Injection Pump Assembly

Ref.	Part Number	Qty.	Description
10	98-9596	1	Joint-Eye
20	98-9643	1	Injection Pump ASM
30	98-9464	1	Bolt-Joint
40	98-9445	2	Gasket
50	98-9430	1	Screw
60	98-9446	1	Gasket
70	98-9466	1	Plug
80	98-9451	1	Gasket
90	98-9456	1	Shim-Injection (0.20Mm)
90	98-9457	1	Shim-Injection (0.25Mm)

Ref.	Part Number	Qty.	Description
90	98-9458	1	Shim-Injection (0.30Mm)
90	115-3046	1	Shim-Injection (0.35Mm)
90	115-3045	1	Shim-Injection (0.175Mm)
100	117-7564	2	Bolt-Hex Soc HD
110	98-9438	2	Stud
120	98-9440	2	Nut-Cap
130	98-9367	2	Washer-Spring
140	99-3514	1	Cover
150	117-7562	1	Gasket-Pump, Fuel
160	100-2203	2	Nut-Flange

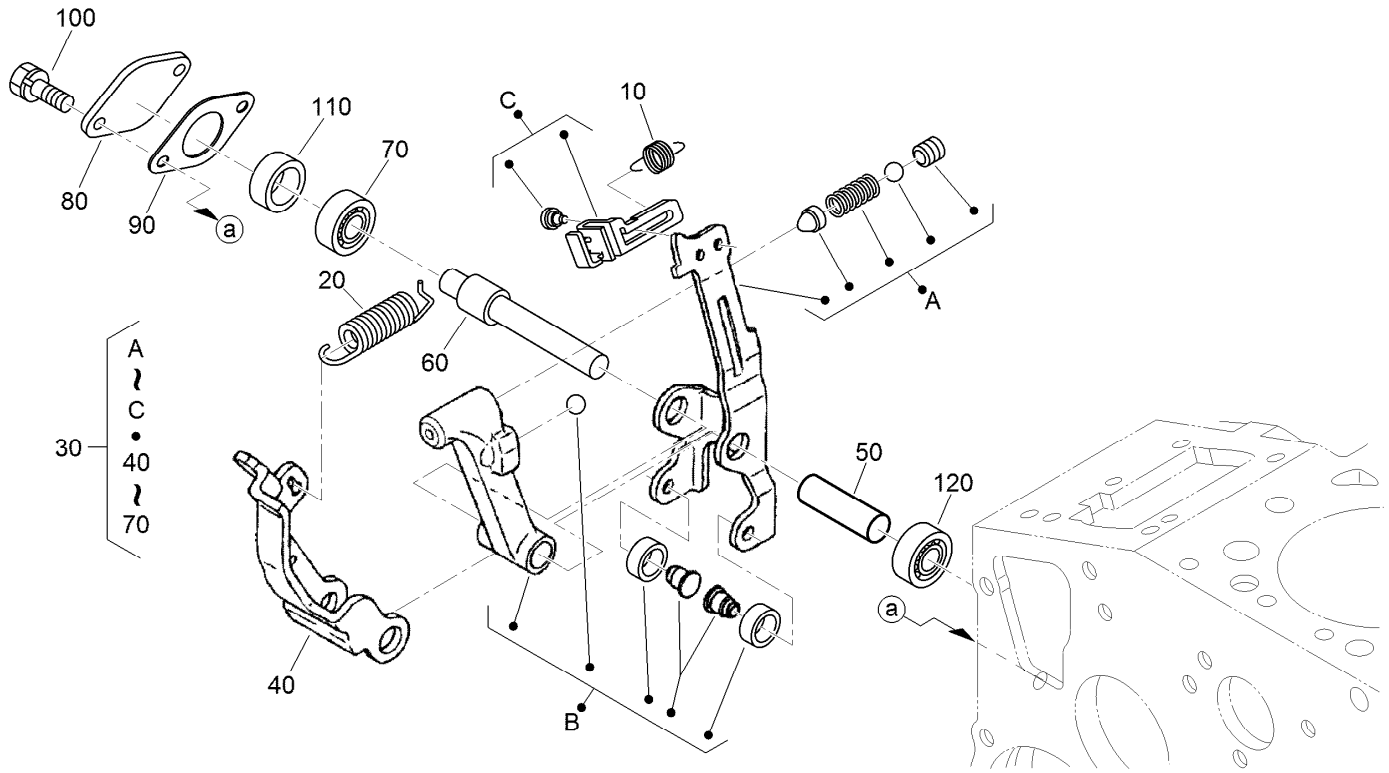

Governor Assembly

Ref.	Part Number	Qty.	Description
10	105-3786	1	Spring-Start
20	107-7839	1	Spring-Governor
30	115-4502	1	Fork Lever ASM
40	107-9084	1	Lever-Fork
50	107-9085	1	Shaft-Lever, Fork
60	107-9086	1	Shaft-Lever, Fork
70	98-9570	1	Bearing-Miniaturize
80	115-4122	1	Cover-Shaft, Fork Lever
90	98-9682	1	Gasket
100	98-9350	2	Bolt
110	98-9567	1	Collar
120	98-9571	1	Bearing-Miniaturize

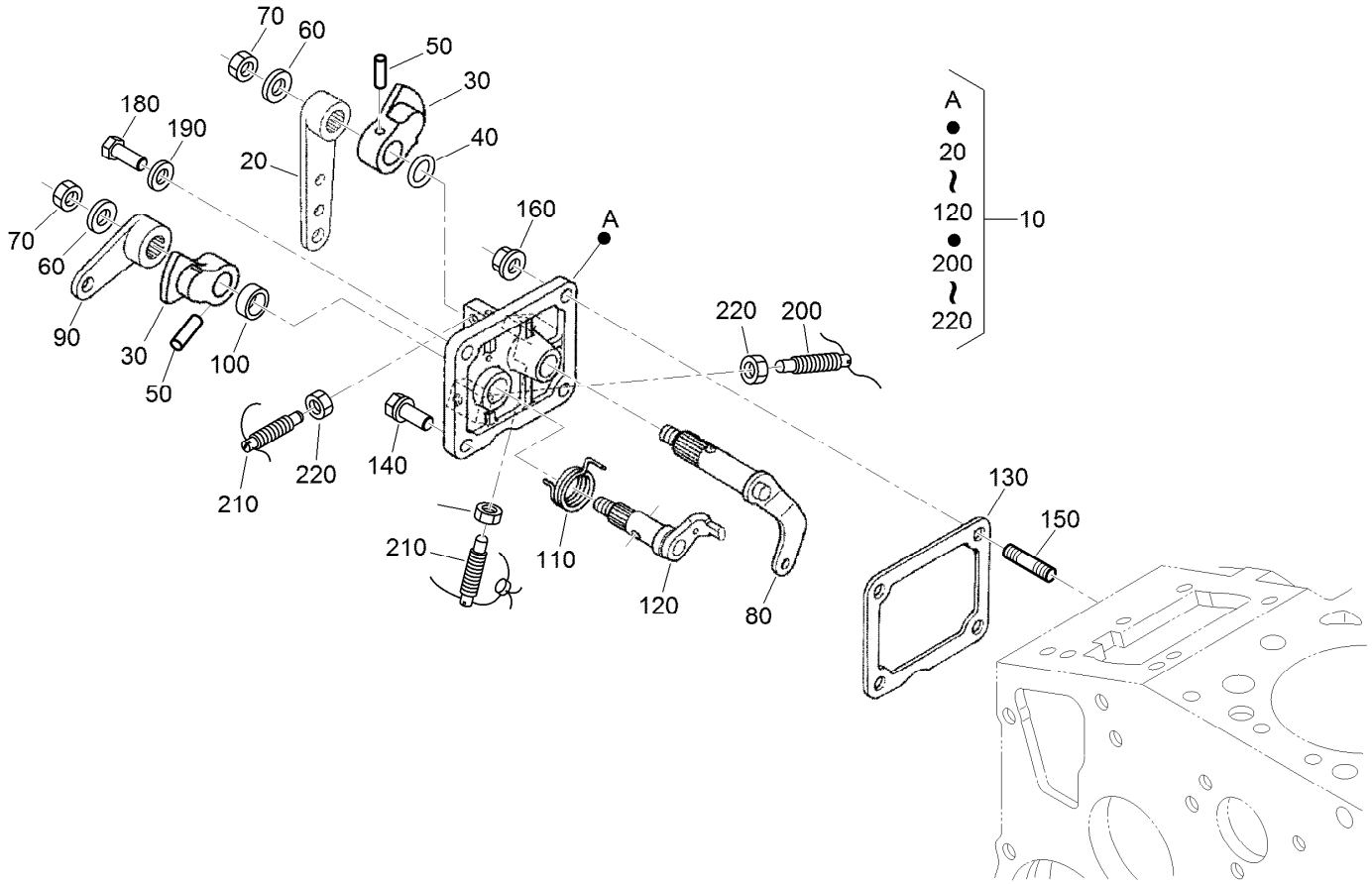

Speed Control Plate Assembly

Ref.	Part Number	Qty.	Description
10	98-9661	1	Control Plate ASM
20	98-9662	1	Lever-Control, Speed
30	98-9572	2	Lever-Control, Speed
40	105-3788	1	O-Ring
50	98-7602	2	Pin-Spring
60	98-9594	2	Washer-Plain
70	98-9589	2	Nut
80	98-9658	1	Governor Lever ASM
90	98-9663	1	Lever-Stop, Engine
100	98-7601	1	Seal-Oil
110	98-9472	1	Spring-Return
120	98-9664	1	Shaft-Lever, Stop
130	98-9637	1	Gasket
140	98-7692	1	Bolt
150	105-3710	2	Stud
160	100-2203	2	Nut-Flange
180	127-0401	1	Bolt-Hex
190	98-7654	1	Gasket
200	117-7566	1	Bolt-Adjusting
210	117-7565	2	Bolt-Adjusting
220	98-7572	3	Nut

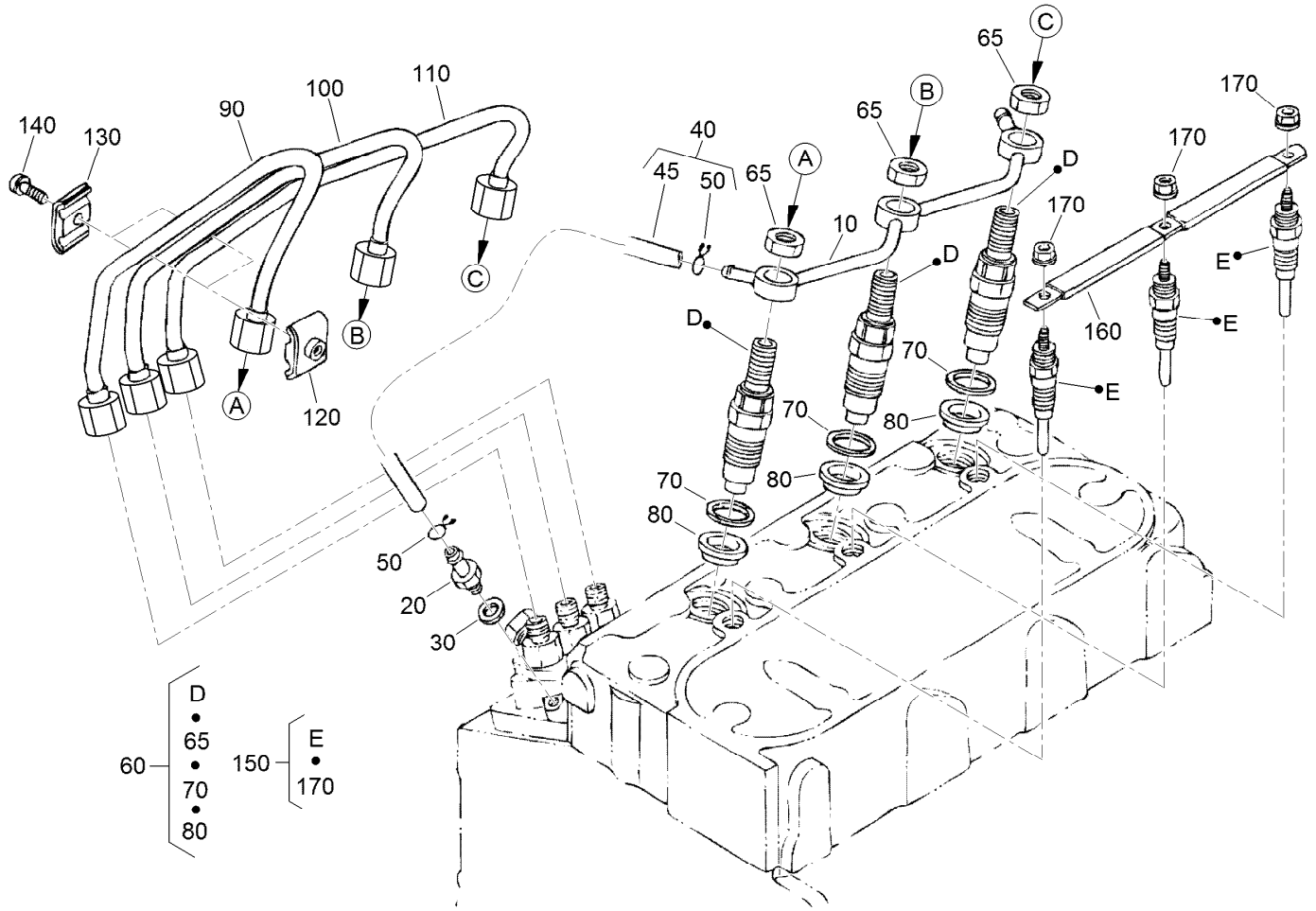

Nozzle Holder and Glow Plug Assembly

Ref.	Part Number	Qty.	Description
10	98-9620	1	Overflow Pipe ASM
20	98-9431	1	Screw-Bleeder, Air
30	98-7654	1	Gasket
40	98-9420	1	Overflow Pipe ASM
45	112-0182	1	Pipe-Overflow
50	98-7671	2	Clip-Pipe
60	115-3018	3	Nozzle Holder Kit
65	121-2411	3	Nut
70	98-7676	3	Gasket
80	98-7677	3	Seal-Heat

Ref.	Part Number	Qty.	Description
90	132-4945	1	Pipe Injection
100	132-4946	1	Pipe Injection
110	132-4947	1	Pipe Injection
120	98-7682	2	Clamp-Pipe
130	98-7683	2	Clamp-Pipe
140	98-7684	2	Screw (W/Washer)
150	130-1411	3	Plug-Glow
160	98-9631	1	Cord-Plug, Glow
170	99-8377	3	Nut-Flange

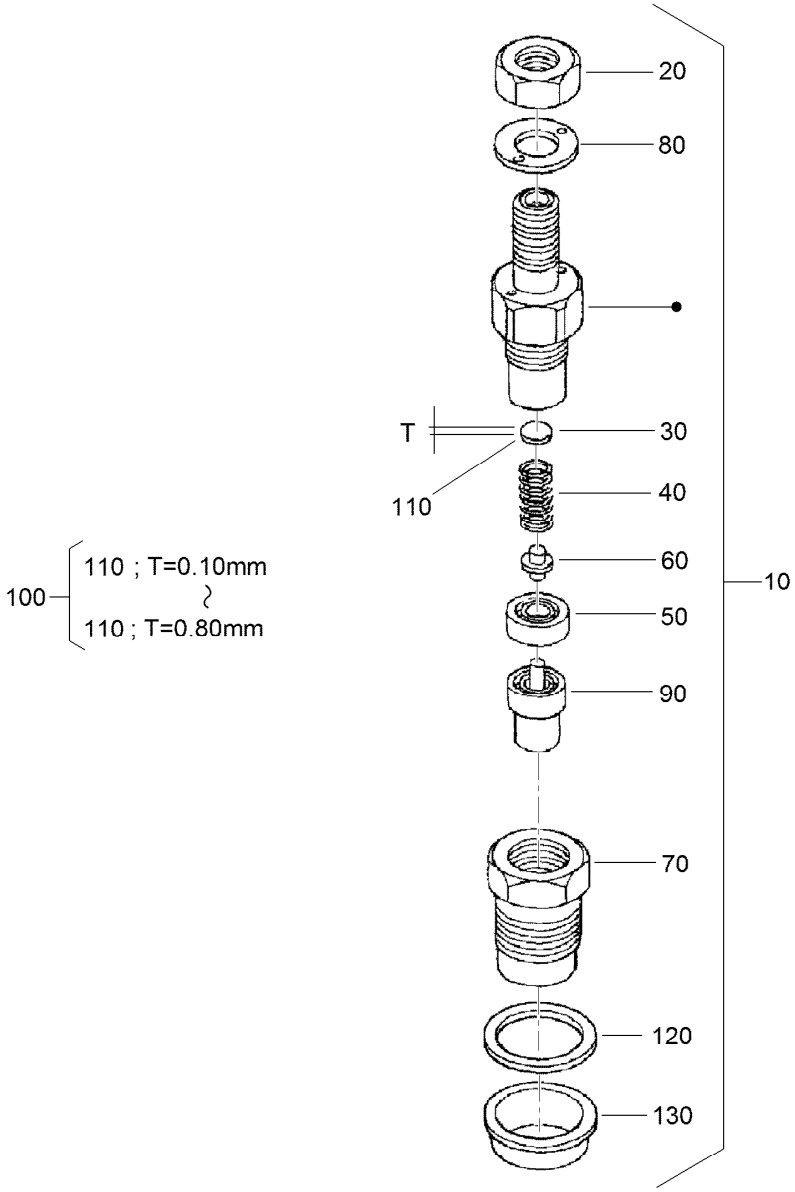

Nozzle Holder Assembly

Ref.	Part Number	Qty.	Description
10	115-3018	3	Nozzle Holder Kit
20	121-2411	3	Nut
30	99-8302	3	Washer-Adjusting
40	99-8303	3	Spring-Nozzle
50	99-8304	3	Spacer-Distance
60	99-8305	3	Rod-Push
70	99-8306	3	Nut-Nozzle
80	99-8307	3	Washer-Plain
90	115-3020	3	Piece-Nozzle
100	99-8309	3	Adjusting Washer ASM
110	99-8310	3	Washer-Adjust (0.10Mm)

Ref.	Part Number	Qty.	Description
110	99-8311	3	Washer-Adjust (0.20Mm)
110	99-8312	3	Washer-Adjust (0.30Mm)
110	99-8313	3	Washer-Adjust (0.40Mm)
110	99-8314	3	Washer-Adjust (0.50Mm)
110	99-8315	3	Washer-Adjust (0.52Mm)
110	99-8316	3	Washer-Adjust (0.54Mm)
110	99-8317	3	Washer-Adjust (0.56Mm)
110	99-8318	3	Washer-Adjust (0.58Mm)
110	99-8319	3	Washer-Adjust (0.80Mm)
120	98-7676	3	Gasket
130	98-7677	3	Seal-Heat

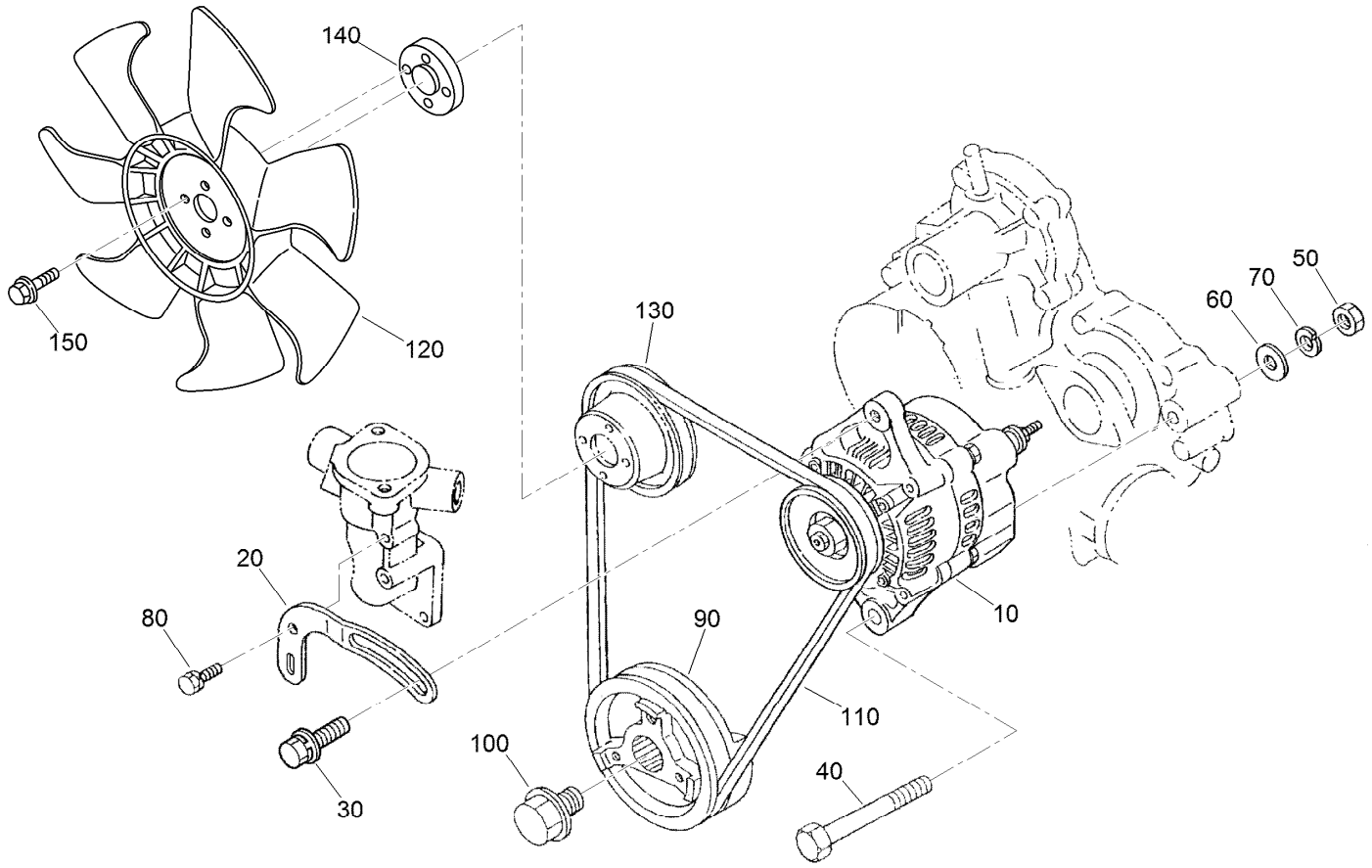

Alternator and Pulley Assembly

Ref.	Part Number	Qty.	Description
10	131-6557	1	Alternator ASM
20	112-7047	1	Stay-Dynamo
30	108-7088	1	Bolt
40	98-9360	1	Bolt
50	98-7737	1	Nut
60	98-9366	1	Washer-Plain
70	99-7527	1	Washer-Spring
80	98-7692	1	Bolt
90	117-8830	1	Pulley-Drive, Fan
100	98-9585	1	Bolt
110	98-9676	1	V-Belt
120	104-4246	1	Fan-Engine
130	98-9584	1	Pulley-Fan
140	104-4247	1	Spacer-Fan
150	108-2873	4	Bolt-Flange

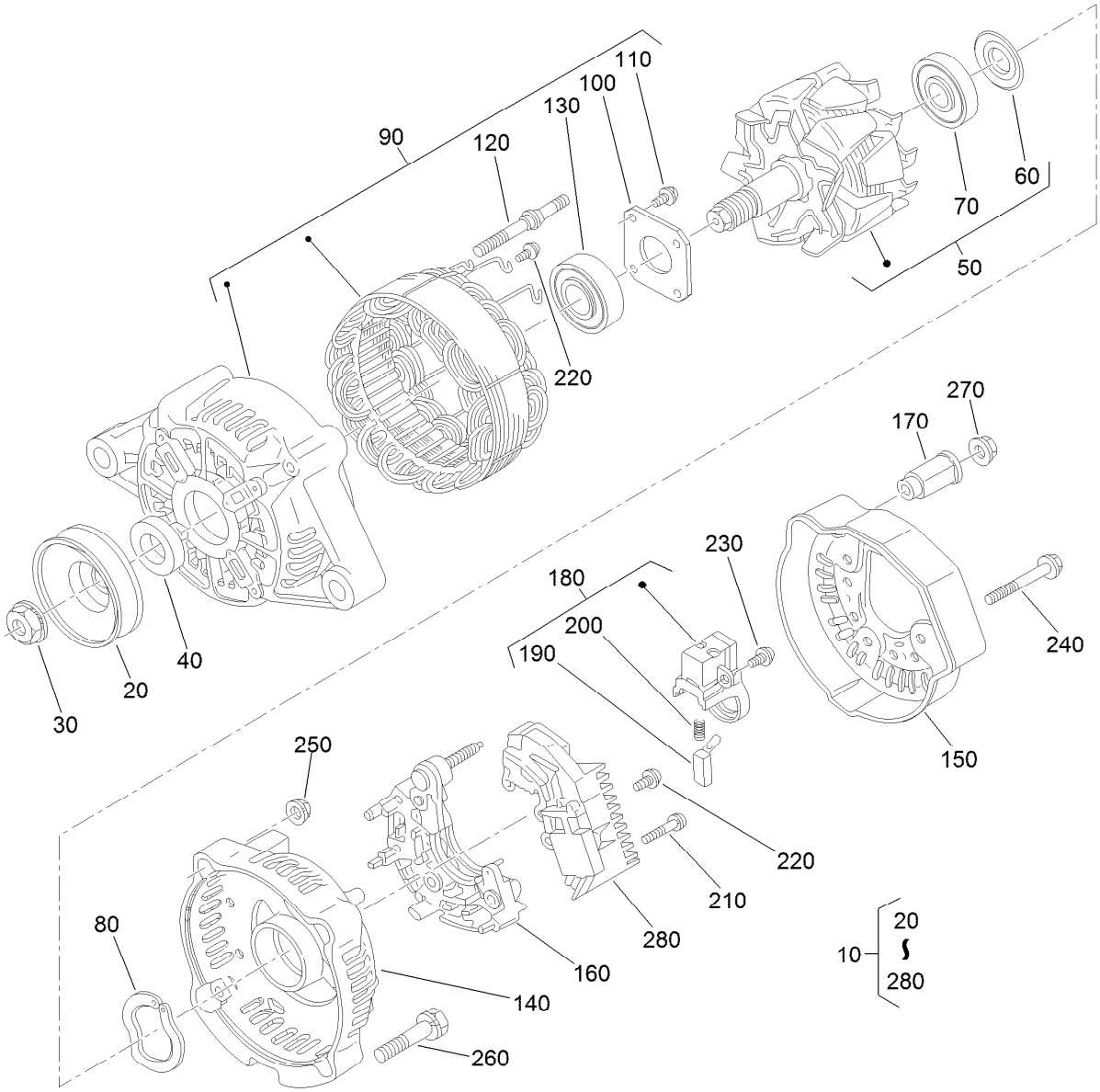

Alternator Components Assembly

Ref.	Part Number	Qty.	Description
10	131-6557	1	Alternator ASM
20	98-9453	1	Pulley-Dynamo
30	98-7708	1	Nut
40	98-7709	1	Collar
50	107-0136	1	Rotor ASM
60	98-7711	1	Cover-Bearing
70	107-0138	1	Bearing-Ball
80	98-7713	1	Washer-Thrust
90	107-0139	1	Drive End Frame ASM
100	98-7715	1	Plate-Retainer
110	98-7716	4	Screw-Head, Round
120	98-7717	2	Bolt-Through
130	131-6560	1	*obs* Bearing-Ball
140	107-9087	1	Frame-End

Ref.	Part Number	Qty.	Description
150	107-0140	1	Cover-End
160	98-7721	1	Rectifier ASM
170	98-7722	1	Bushing-Insulation
180	107-0141	1	Brush Holder ASM
190	98-7724	2	Brush
200	98-7725	2	Spring-Brush
210	98-7726	2	Screw-Head, Round
220	98-7727	6	Screw-Head, Round
230	98-7728	1	Screw-Head, Round
240	98-7729	3	Bolt
250	98-7730	2	Nut
260	98-7731	2	Bolt
270	98-7732	1	Nut
280	110-3799	1	Regulator ASM

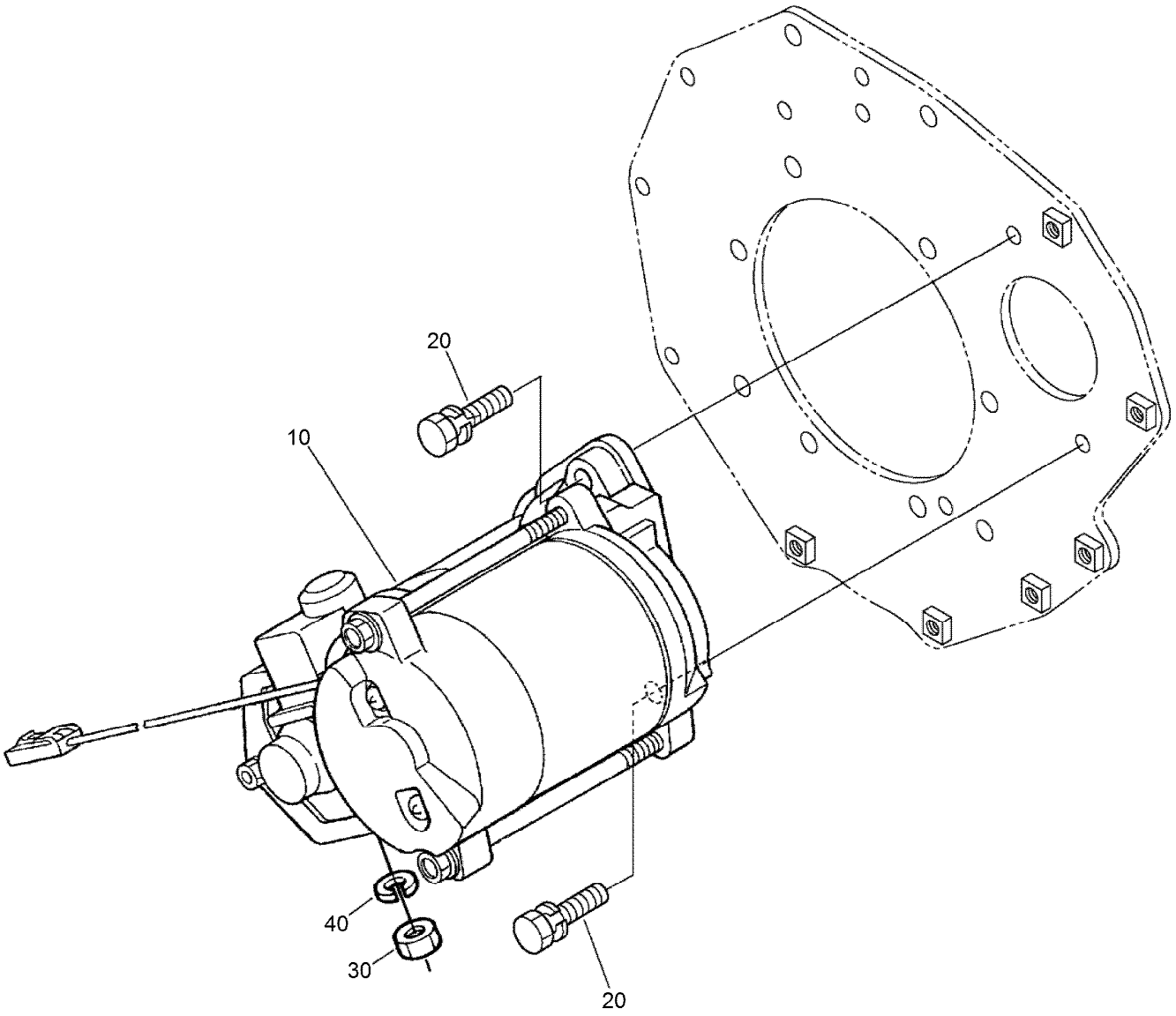

Starter Installation Assembly

Ref.	*Part Number*	*Qty.*	*Description*
10	132-4948	1	Starter
20	98-7697	2	Bolt
30	98-7739	1	Nut
40	131-9579	1	Washer-Spring, Lock

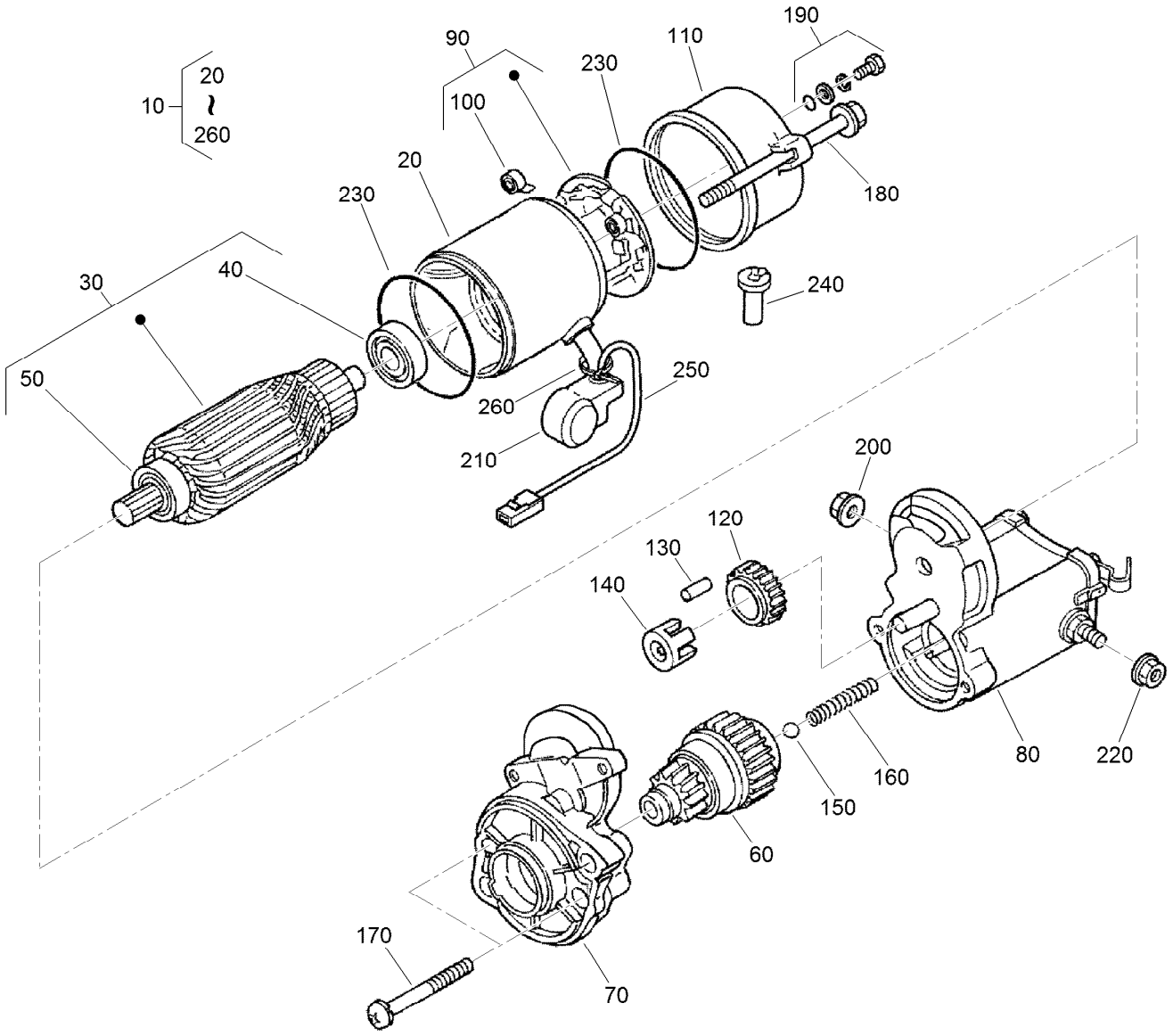

Starter Component Assembly

Ref.	Part Number	Qty.	Description
10	132-4948	1	Starter
20	132-4949	1	Yoke
30	132-4930	1	Armature
40	98-7743	1	Bearing
50	98-7744	1	Bearing
60	132-4934	1	Clutch ASM
70	132-4933	1	Housing ASM
80	105-3746	1	Magnetic Switch ASM
90	132-4932	1	Holder-Brush
100	132-4931	4	Spring-Brush
110	132-4935	1	Frame End ASM
120	98-7751	1	Gear
130	98-7753	5	Roller

Ref.	Part Number	Qty.	Description
140	98-7752	1	Retainer
150	98-7755	1	Ball
160	98-7754	1	Spring
170	98-7756	2	Bolt
180	100-2210	2	Bolt-Through
190	98-7758	2	Bolt ASM
200	99-8376	1	Nut-Hex
210	99-8375	1	Cover
220	99-8371	1	Nut-Hex
230	98-7757	2	O-Ring
240	98-7759	1	Pipe-Drain
250	98-9711	1	Cord-Solenoid, Stop
260	98-9712	1	Band-Cover

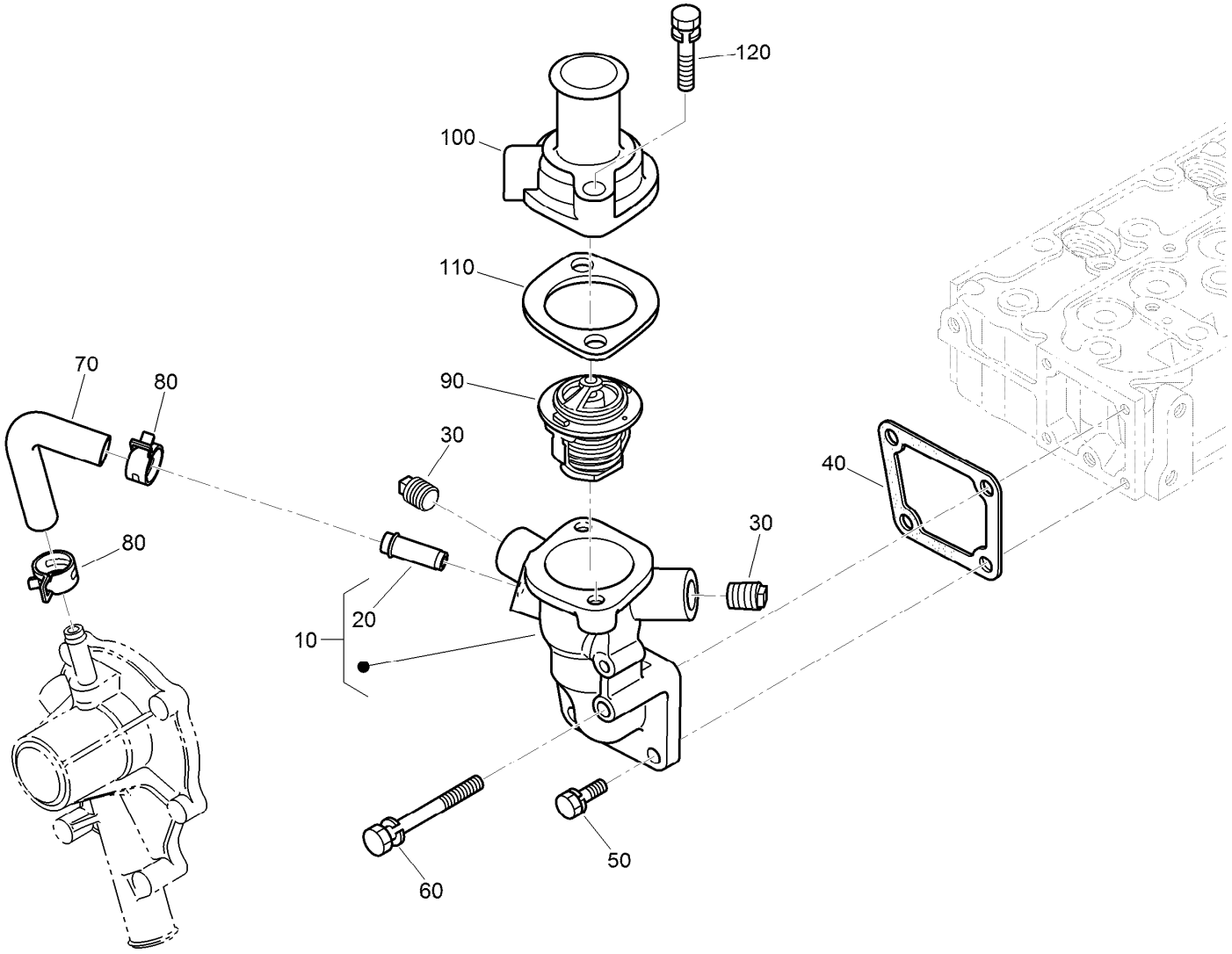

Water Flange and Thermostat Assembly

Ref.	Part Number	Qty.	Description
10	132-4943	1	Water Flange ASM
20	98-9580	1	Pipe-Return, Water
30	110-3821	2	Plug
40	98-9638	1	Gasket-Flange, Water
50	98-7692	3	Bolt
60	98-9356	1	Bolt
70	98-9578	1	Pipe-Return, Water
80	125-9078	2	Clamp-Hose
90	98-7778	1	Thermostat ASM
100	98-9471	1	Cover-Thermostat
110	105-3748	1	Gasket-Thermostat
120	98-7777	2	Bolt

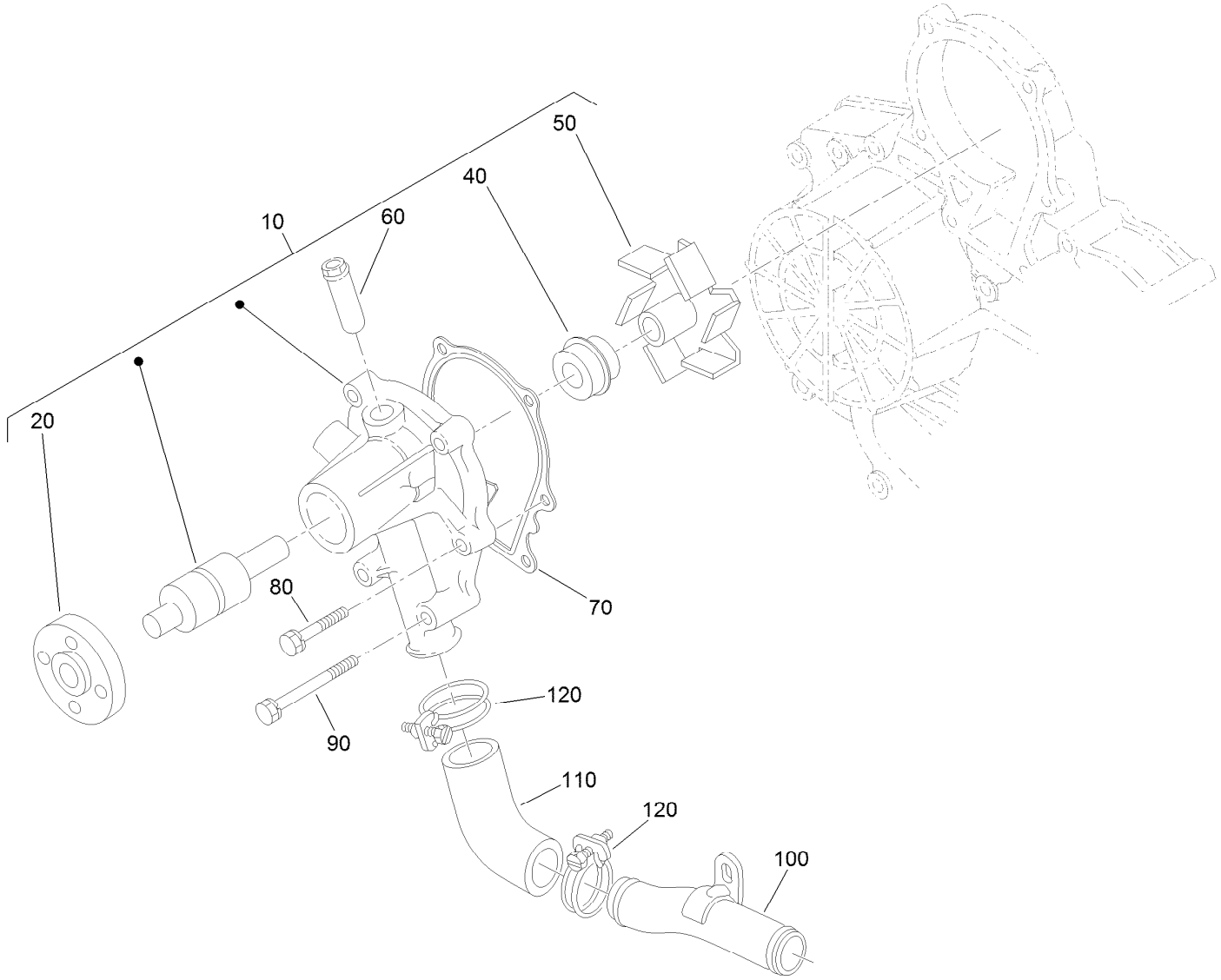

Water Pump Assembly

Ref.	Part Number	Qty.	Description
10	107-9089	1	Water Pump ASM
20	99-3516	1	Flange-Pump, Water
40	105-3750	1	Mechanical Seal ASM
50	112-7017	1	Impeller-Pump, Water
60	100-1932	1	Pipe-Return, Water
70	99-3454	1	Gasket-Pump, Water
80	98-9353	4	Bolt
90	107-9090	4	Bolt
100	98-9716	1	Pipe-Water
110	107-9091	1	Pipe-Water
120	127-0439	2	Clamp-Hose

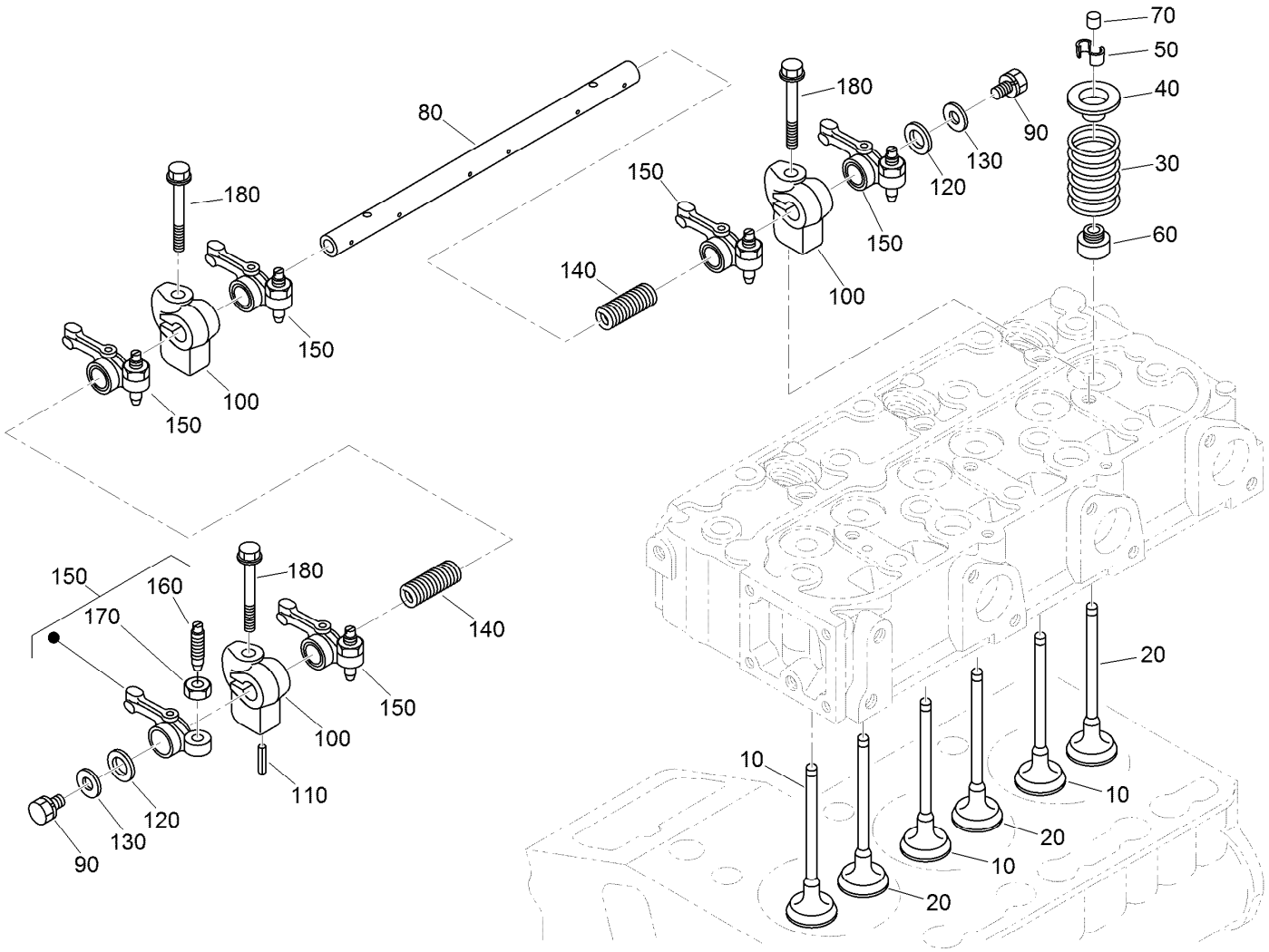

Valve and Rocker Arm Assembly

Ref.	Part Number	Qty.	Description
10	112-7018	3	Valve-Inlet
20	120-2564	3	Valve-Exhaust
30	98-9648	6	Spring-Valve
40	107-9092	6	Retainer-Spring
50	98-9390	6	Collet-Spring, Valve
60	99-8385	6	Seal-Stem, Valve
70	98-9497	6	Cap-Valve
80	130-1248	1	Shaft-Arm, Rocker
90	108-2873	2	Bolt-Flange

Ref.	Part Number	Qty.	Description
100	98-9505	3	Bracket-Arm, Rocker
110	105-3758	1	Pin-Spring
120	98-9507	2	Washer-Shaft, Rocker Arm
130	110-3832	2	Washer-Plain
140	98-9504	2	Spring-Arm, Rocker
150	112-7020	6	Rocker Arm ASM
160	98-9502	6	Screw-Adjusting
170	98-9503	6	Nut
180	117-8832	3	Bolt

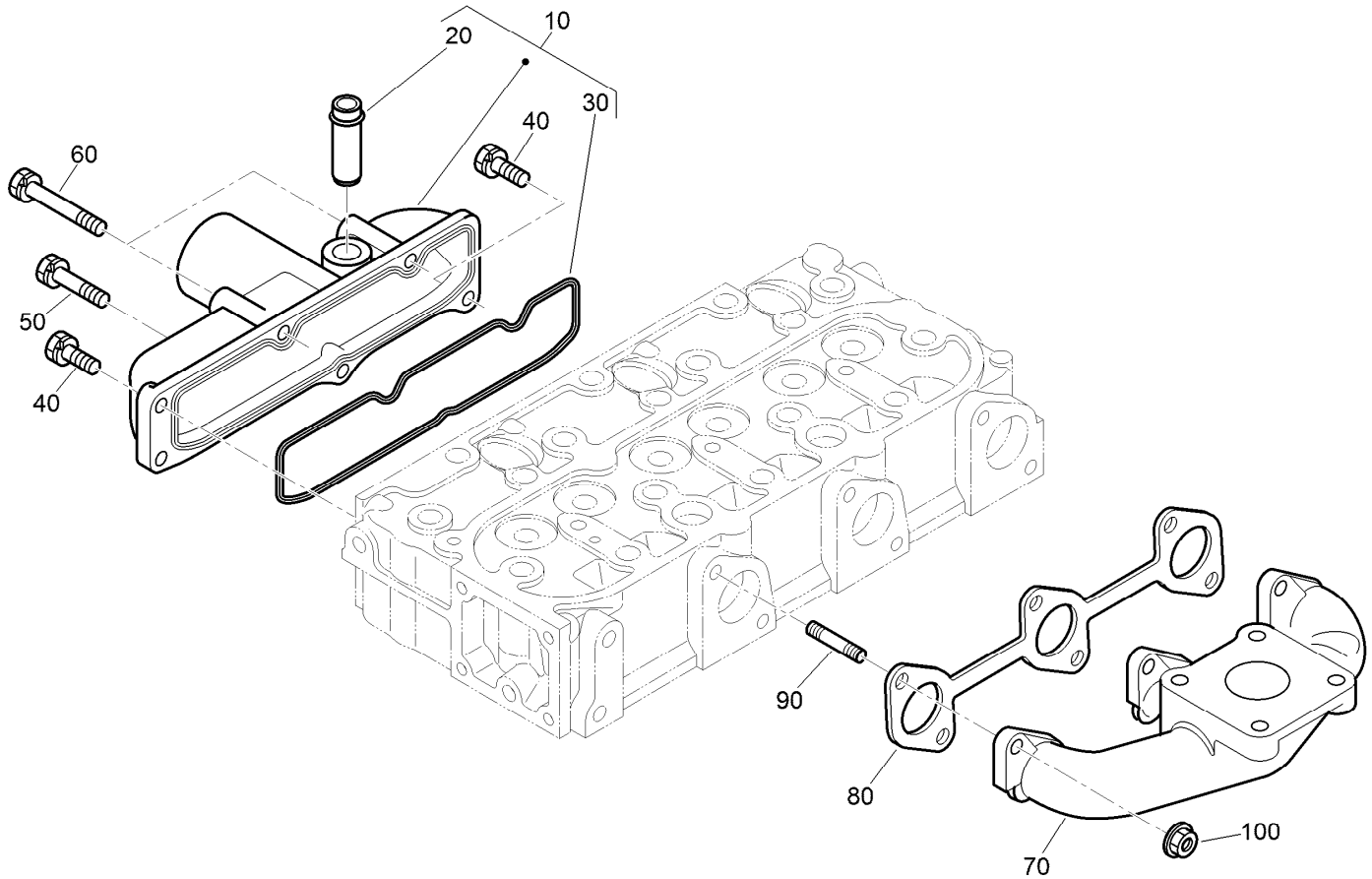

Inlet and Exhaust Manifold Assembly

Ref.	*Part Number*	*Qty.*	*Description*
10	108-6577	1	Inlet Manifold ASM
20	98-9492	1	Joint-Pipe, Breather
30	98-9609	1	Gasket-Manifold, Inlet
40	127-0403	3	Bolt-Flange
50	98-9353	1	Bolt
60	105-3797	2	Bolt
70	117-8847	1	Manifold-Exhaust
80	99-8327	1	Gasket-Manifold, Exhaust
90	98-9588	6	Stud
100	98-9665	6	Nut

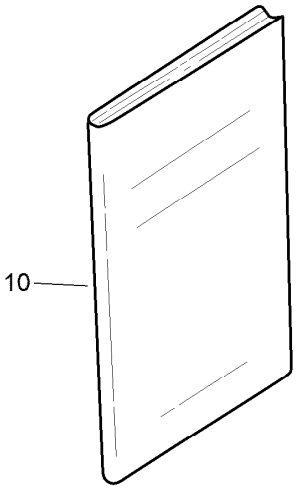

Accessories and Service Parts

Ref.	*Part Number*	*Qty.*	*Description*
10	130-1543	1	Manual-Operator

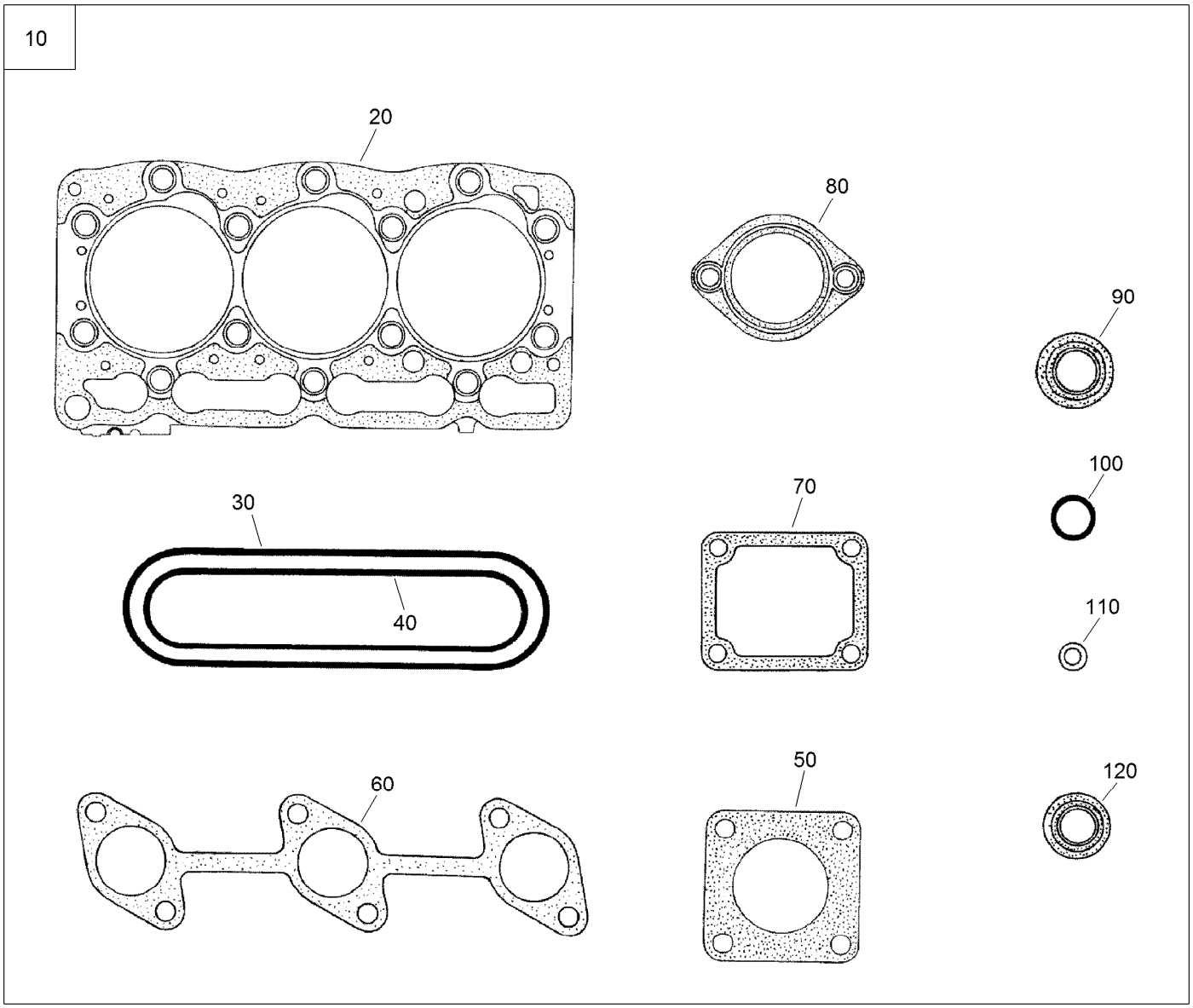

Upper Gasket Kit

Ref.	*Part Number*	*Qty.*	*Description*
10	117-8833	1	Upper Gasket Kit
20	108-6573	1	Gasket-Head, Cylinder
30	117-8806	1	Gasket-Cover, Head
40	98-9609	1	Gasket-Manifold, Inlet
50	99-8343	1	Gasket-Muffler
60	99-8327	1	Gasket-Manifold, Exhaust
70	98-9638	1	Gasket-Flange, Water
80	105-3748	1	Gasket-Thermostat
90	98-7677	3	Seal-Heat
100	99-3446	2	O-Ring
110	98-7676	3	Gasket
120	99-8385	6	Seal-Stem, Valve

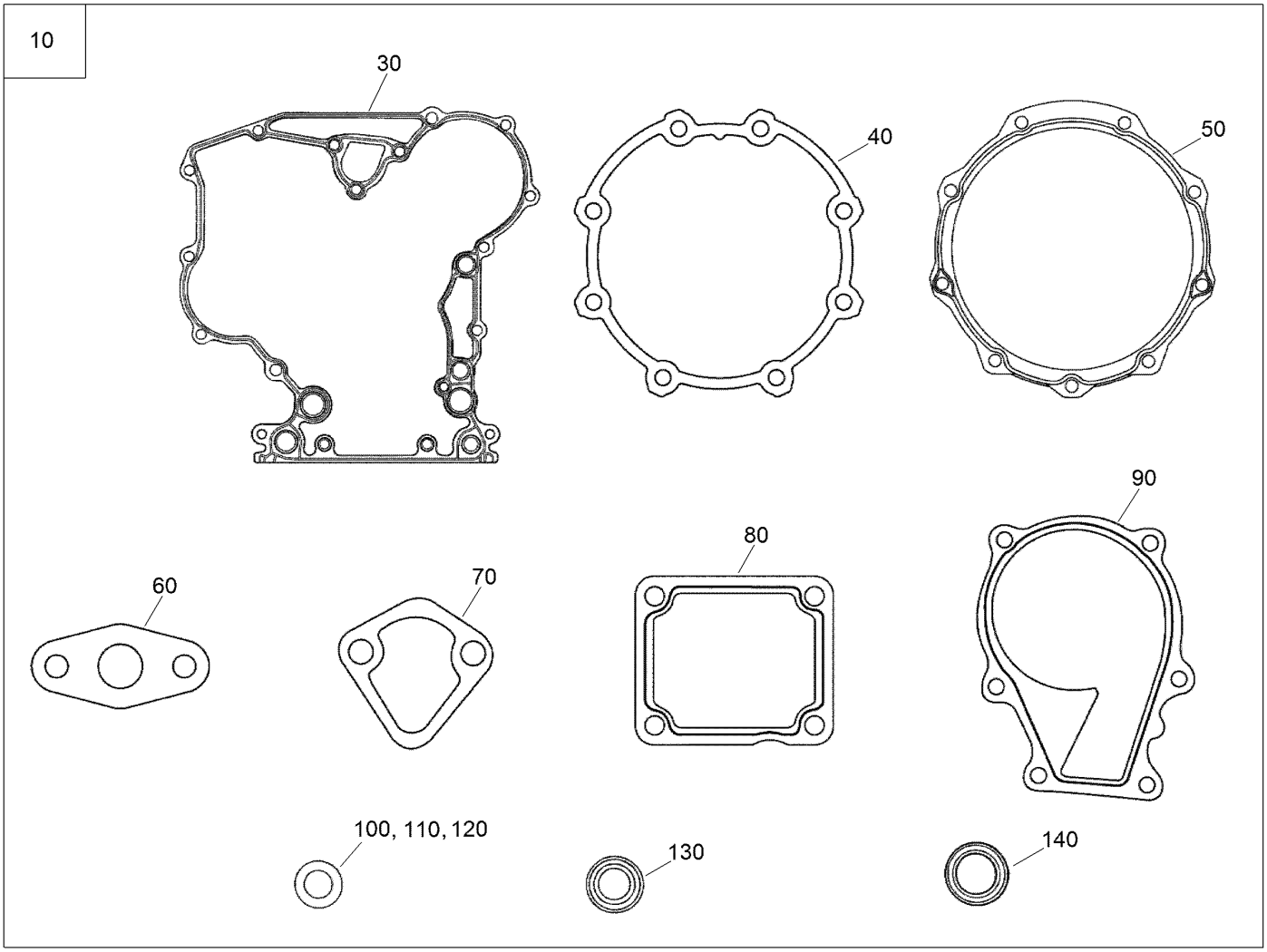

Lower Gasket Kit

Ref.	*Part Number*	*Qty.*	*Description*
10	117-8834	1	Lower Gasket Kit
30	117-8835	1	Gasket-Case, Gear
40	131-6554	1	Gasket-Case, Bearing
50	112-7037	1	Gasket-Cover, Case
60	98-9682	1	Gasket
70	117-7562	1	Gasket-Pump, Fuel
80	98-9637	1	Gasket
90	99-3454	1	Gasket-Pump, Water
100	98-7654	6	Gasket
110	98-7524	1	Gasket
120	110-9715	1	Gasket-Pan, Oil
130	98-9482	1	Seal-Oil
140	112-0180	1	Seal-Oil

Attachments and Accessories

For 22327 TX 1000 Compact Utility Loader

Product Name	Model/Part
Standard Bucket	22340
Adjustable Forks	22341
High Volume Bucket	22342
48in Hydraulic Blade	22414
Bore Drive Head	22420
Rod and Reamer	22421
Multi-Purpose Tool	22423
Direct Drive Power Box Rake	22426
Stump Grinder	22429
Tree Forks	22438
Cement Bowl	22442
40in Tiller	22445
Snowthrower	22456
Crumber Kit	22464
Trench Filler	22472
High-Torque Trencher Head	22473
High-Speed Trencher Head	22474
Narrow Bucket	22520
Grapple Rake	22521
Auger Head	22805
Universal Swivel Auger Head	22806
18in Auger Bit	22814
24in Auger Bit	22815
30in Auger Bit	22816
12in Auger Bit Extension	22818
24in Auger Bit Extension	22819
6in Full-Flight Auger Bit	22820
9in Full-Flight Auger Bit	22821
12in Full-Flight Auger Bit	22822
15in Full-Flight Auger Bit	22823
Vibratory Plow	22911
Soil Cultivator	23102
Concrete Breaker	23135
Leveler	23165

For 22327G TX 1000 Compact Utility Loader

Product Name	Model/Part
Standard Bucket	22340
Adjustable Forks	22341
High Volume Bucket	22342
48in Hydraulic Blade	22414
Bore Drive Head	22420
Rod and Reamer	22421
Multi-Purpose Tool	22423

Attachments and Accessories (continued)

Direct Drive Power Box Rake 22426
Stump Grinder 22429
Tree Forks 22438
Cement Bowl 22442
40in Tiller 22445
Snowthrower 22456
Crumber Kit 22464
Trench Filler 22472
High-Torque Trencher Head 22473
High-Speed Trencher Head 22474
Narrow Bucket 22520
Grapple Rake 22521
Auger Head 22805
Universal Swivel Auger Head 22806
18in Auger Bit 22814
24in Auger Bit 22815
30in Auger Bit 22816
12in Auger Bit Extension 22818
24in Auger Bit Extension 22819
6in Full-Flight Auger Bit 22820
9in Full-Flight Auger Bit 22821
12in Full-Flight Auger Bit 22822
15in Full-Flight Auger Bit 22823
Vibratory Plow 22911
Soil Cultivator 23102
Concrete Breaker 23135
Leveler 23165

Notes:

Notes:

Notes:

TORO®

Count on it.