FORM NO. 3322–479

TORO®

# Recycler®

## Walk-Behind Power Mower

**Model No.: 22170, 22171–9900001 & Up**

# Operator’s Manual

Para obtener una versión gratis de este manual en español, escriba a la dirección indicada más abajo. Asegúrese de indicar el modelo y el número de serie de su producto.

Pour obtenir gratuitement une version en français de ce manuel, écrivez à l’adresse ci–dessous. N’oubliez pas d’indiquer les numéros de modèle et de série de votre produit.

The Toro Company, Attn: Parts Dept., 8111 Lyndale Ave S, Bloomington, MN 55420–1196.

Domestic English (EN)

# Contents


| | Page |
|---|---|
| Introduction | 2 |
| Safety | 3 |
| Safe Operating Practices | 3 |
| Safety and Instruction Decals | 5 |
| Assembly | 5 |
| Install Handle | 5 |
| Install Discharge Tunnel Plug | 6 |
| Before Starting | 6 |
| Oil | 6 |
| Gasoline | 7 |
| Operation | 8 |
| Starting the Engine | 8 |
| Stopping the Engine | 8 |
| Self–propel Drive | 8 |
| Using the Discharge Tunnel Plug | 9 |
| Using Grass Bag | 9 |
| Adjusting the Cutting Height | 11 |
| Operating Tips | 11 |
| Maintenance | 12 |
| Recommended Maintenance Schedule | 12 |
| Air Filter | 13 |
| Draining Gasoline and Cleaning Fuel Filter | 14 |
| Engine Oil | 14 |
| Oil Filter | 15 |
| Spark Plug | 15 |
| Adjusting the Self-propel Cable | 16 |
| Adjusting the Blade Brake Cable | 16 |
| Maintaining the Blade | 17 |
| Lubricating the Self–propel Drive | 19 |
| Lubricating the Gear Case | 19 |
| Cleaning the Underside of the Mower Housing | 19 |
| Cleaning Under the Belt Cover | 20 |
| Servicing Wheels | 20 |
| Troubleshooting | 21 |
| Storage | 22 |
| Fuel | 22 |
| Preparing the Engine | 22 |
| Cleaning the Mower | 22 |
| General | 22 |
| Removing From Storage | 23 |
| Accessories | 23 |
| Warranty | Back Cover |


**WARNING**

**The engine exhaust from this product contains chemicals known to the State of California to cause cancer, birth defects, or other reproductive harm.**

# Introduction

Thank you for purchasing a Toro product.

All of us at Toro want you to be completely satisfied with your new product, so feel free to contact your local Authorized Service Dealer for help with service, genuine Toro parts, or other information you may require.

Whenever you contact your Authorized Service Dealer or the factory, always know the model and serial numbers of your product. These numbers will help the Service Dealer or Service Representative provide exact information about your specific product. You will find the model and serial number decal located in a unique place on the product as shown below.

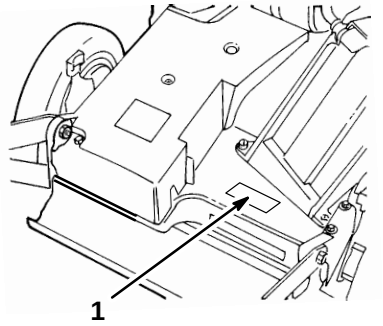


1. Model and Serial Number Decal

For your convenience, write the product model and serial numbers in the space below.

**Model No:** _____

**Serial No.** _____

Read this manual carefully to learn how to operate and maintain your product correctly. Reading this manual will help you and others avoid personal injury and damage to the product. Although Toro designs, produces and markets safe, state-of-the-art products, you are responsible for using the product properly and safely. You are also responsible for training persons who you allow to use the product about safe operation.


©**The Toro Company – 1999**
**All Rights Reserved**





Printed in USA

The Toro warning system in this manual identifies potential hazards and has special safety messages that help you and others avoid personal injury, even death. DANGER, WARNING and CAUTION are signal words used to identify the level of hazard. However, regardless of the hazard, be extremely careful.

**DANGER** signals an extreme hazard that will cause serious injury or death if the recommended precautions are not followed.

**WARNING** signals a hazard that may cause serious injury or death if the recommended precautions are not followed.

**CAUTION** signals a hazard that may cause minor or moderate injury if the recommended precautions are not followed.

Two other words are also used to highlight information. “Important” calls attention to special mechanical information and “Note” emphasizes general information worthy of special attention.

The left and right side of the machine is determined by standing behind the handle in the normal operator’s position.

# Safety

**This machine meets or exceeds CPSC blade safety requirements for walk–behind rotary mowers and the B71.4 specifications of the American National Standards Institute, in effect at time of production. However, improper use or maintenance by the operator or owner can result in injury. To reduce the potential for injury, comply with these safety instructions and always pay attention to the safety alert ⚠ symbol which means CAUTION, WARNING or DANGER—“personal safety instruction.” Failure to comply with the instruction may result in personal injury.**

**⚠ WARNING ⚠**

**POTENTIAL HAZARD**
- **Engine exhaust contains carbon monoxide, which is an odorless, deadly poison.**

**WHAT CAN HAPPEN**
- **Carbon monoxide can kill you and is also known to the State of California to cause birth defects.**

**HOW TO AVOID THE HAZARD**
- **Do not run engine indoors or in an enclosed area.**

## Safe Operating Practices

This product is capable of amputating hands and feet and throwing objects. Always follow all safety instructions to avoid serious injury or death.

This mower is designed for cutting and recycling grass or, when equipped with a grass bag, for catching cut grass. Any use for purposes other than these could prove dangerous to the operator or bystanders.

**Note:** This engine is NOT equipped with a spark arrester muffler. Use or operation of this mower in the State of California on any forest-covered, brush-covered or unimproved grass-covered land, without an approved spark arrester muffler, is a violation of the law. Other states may have similar laws.

### General Operation

- Read this manual carefully before operating the mower. Become familiar with the controls and proper use of the mower. Never allow children under 16 years of age to operate the mower. Never allow adults to operate mower without proper instructions.
- The operator of the mower is responsible for keeping everyone, especially children and pets, away from area of operation. The operator is responsible for accidents or hazards occurring to other people or their property.
- Thoroughly inspect the area where the mower will be used and remove sticks, stones, wire, and debris that could be picked up and thrown by the mower. Watch for foreign objects while mowing.
- Wear long pants and substantial shoes. Do not operate the mower while wearing open-toed shoes, jewelry, loose clothing, or when barefoot.
- Check the fuel level before starting the engine. Because fuel is highly flammable, handle it carefully.
  - Use an approved fuel container.
  - Fill the fuel tank outdoors, not indoors. **Never add fuel to an engine that is running or hot.**
  - Install a gas cap on the fuel container and gas tank, and wipe up any spilled gasoline before starting the engine.
  - Do not smoke while refueling.
- Keep all guards, shields, safety devices, cover-deflector assembly, optional grass catcher, optional side discharge chute, and/or optional discharge tunnel plug in place. Repair or replace damaged parts, including decals. Check all safety devices before each use.

- The engine, blade, and self–propel drive (self-propelled model) are designed to stop when the control bails are released. Ensure that the control and brake function properly before each use of the mower.
- Disengage the self-propel mechanism or drive clutch (self-propelled models) before starting the engine.
- Before using, always visually inspect the mower to ensure that the blades, blade fasteners, and cutter assembly are not worn or damaged. Replace worn or damaged blades and fasteners in sets to preserve balance.

## While Operating

- Do not run the engine indoors.
- Start the engine carefully, according to instructions and with your feet well away from the blade.
- Always maintain secure footing. Keep a firm grip on the handle and walk; never run. Never operate the mower in wet grass. Mow only in daylight or in good artificial light.
- Mow across the face of slopes; never up and down. Use extreme caution when changing direction on slopes. Do not mow excessively steep slopes. Wear skid resistant shoes on slopes.
- Always wear safety glasses or eye shields during operation to protect your eyes from foreign objects that may be thrown from the mower. Wearing of hearing protection, protective gloves, and a safety helmet is advisable.
- Keep face, hands, and feet away from the mower housing and cutter blade when the engine is running. The blade can cause injury to hands and feet. Stay behind the handle until the engine stops.
- Use extreme caution when reversing or pulling the mower toward you.
- Since the blade rotates for a few seconds after the control bar is released, stay behind the handle until all moving parts stop.
- After striking a foreign object or if mower vibrates abnormally, stop the engine and remove the wire from the spark plug. Check the mower for damage and make all repairs before using it again. If major repairs are ever needed or if assistance is desired, contact your local Authorized Toro Service Dealer.
- Stop the engine and wait for all moving parts to stop before adjusting the height-of-cut.
- Stop the blade when pushing the mower over dirt or gravel driveways.
- Stop the engine before leaving the operator’s position behind the handle. Disconnect the wire from the spark plug if the mower will be unattended.
- Do not touch the engine while it is running or shortly after it is stopped because it will be hot enough to cause a burn.
- Refuel only when the engine is cool.
- If the mower must be lifted to be transported, turn off the engine and stay behind the handle until all moving parts stop. Disconnect the spark plug wire and allow the engine to cool.

## Maintenance and Storage

- Perform all maintenance procedures prescribed in this manual. If major repairs are ever needed or if assistance is desired, contact your Authorized Toro Service Dealer.
- Before the mower is cleaned, inspected, serviced, or adjusted, stop the engine and disconnect the wire from the spark plug. Keep the wire away from the plug to prevent accidental starting.
- To ensure that the mower is in safe operating condition, frequently check and keep all nuts, bolts, and screws tight. Ensure that the blade bolt is tightened to 50 ft–lb (68 N·m).
- When servicing the blade, refer to the Maintaining the Blade section, page 17. for correct installation and servicing procedures.
- To reduce fire hazard, keep the engine free of excessive grease, grass, leaves, and accumulations of dirt.
- Allow the engine to cool before storing the mower in any enclosure. Do not store the mower with gasoline in the fuel tank near any open flame, or where gasoline fumes may be ignited by a spark.
- Do not overspeed the engine by changing the governor settings.
- At the time of manufacture, the mower conformed to the safety standards in effect for rotary mowers. For best performance and continued safety certification of the mower, use genuine Toro replacement parts and accessories. Replacement parts and accessories made by other manufacturers may result in non–conformance with the safety standards, and that could be dangerous.
- For storage instructions, refer to the Storage section on page 22.

## Safety and Instruction Decals

Safety decals and instructions are easily visible to the operator and are located near any area of potential danger. Replace any decal that is damaged or lost.




**ON MOWER HOUSING**
**(Part No. 71-1280)**




**ON MOWER HOUSING**
**(Part No. 39-5770)**




**Model 22170 only**
**ON MOWER HOUSING**
**(Part No. 92-1779)**

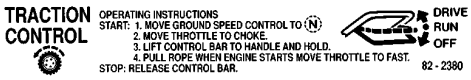





**Model 22171 only**
**ON HANDLE**
**(Part No. 83-2380)**

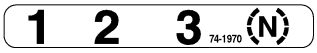


**Model 22171 only**
**ON BELT COVER**
**(Part No. 74-1970)**

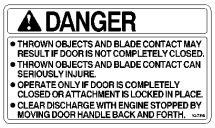


**ON DISCHARGE TUNNEL**

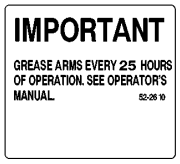


**Model 22170 only**
**ON BELT COVER**
**(Part No. 52-2610)**

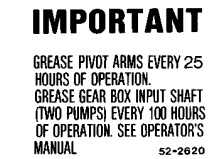


**Model 22171 only**
**ON BELT COVER**
**(Part No. 52-2620)**




**ON PLUG**

# Assembly

## Install Handle

1. Mount handle to outside of mower housing, using bottom hole, with (2) 5/16–18 x 1–1/4" lg. capscrews, washers, and thin nylon insert locknuts (Fig. 1).
2. Secure handle latches to handle with (2) 5/16–18 x 1–1/2" lg. capscrews, washers and nylon insert locknuts (Fig. 1).

**Note:** Handle height is adjustable for operator comfort. Stand behind mower handle to gauge height. To adjust handle height, reposition capscrews and locknuts securing handle latches to handle into other mounting holes in latches.

3. Slide bag support rod thru **top** mounting holes in handle and secure each end with a cap locknut (Fig. 1).
4. Use a cable tie to secure the control cables to left handle below the bag support rod.

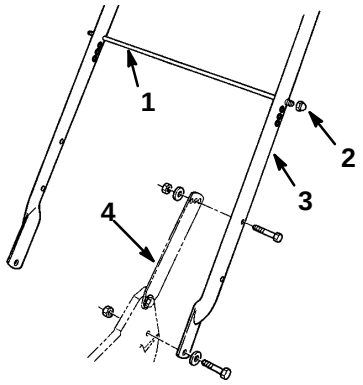


m–3850

**Figure 1**

1. Bag support rod
2. Cap locknut
3. Handle
4. Handle latch

5. Pull starter rope through rope guide on handle (Fig. 2).

**Note:** To make the rope easier to loop, squeeze the control bar on the handle to release the blade brake.

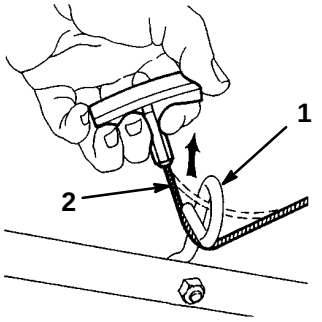


m–210

**Figure 2**

1. Rope guide
2. Starter rope

## Install Discharge Tunnel Plug

**1.** Open the discharge door by pulling forward on the handle and moving it rearwards (Fig. 3). Hold the discharge door handle to prevent the spring–loaded door from closing while inserting the plug.

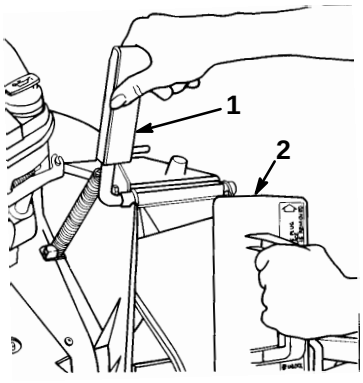


m–262

**Figure 3**

1. Discharge door handle
2. Plug tilted clockwise

**2.** Since the plug is slightly wider than the discharge tunnel opening, rotate the plug clockwise slightly while inserting it (Fig. 3). Make sure the arrow on the plug decal is pointing upwards.

**3.** Push the plug all the way in until the spring clip on the bottom of the plug clicks into place, locking the plug securely into the discharge tunnel (Fig. 4). Release discharge door handle to lock top of plug.

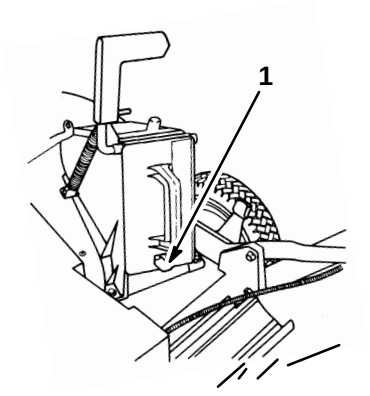


m–275

**Figure 4**

1. Spring clip

# Before Starting

## Oil

Initially, the crankcase must be filled with .8 quarts (0.75 liters) of SAE 30 oil; 10W-30 oil may be substituted if SAE 30 is not available. Use any high quality detergent oil having the American Petroleum Institute (API) “service classification”—SF, SG, SH or SJ.

Before each use, ensure that the oil level is between the FULL and ADD marks on the dipstick (Fig. 5). Add oil if the level is low.

**1.** Position the mower on a level surface and clean around the dipstick (Fig. 5).

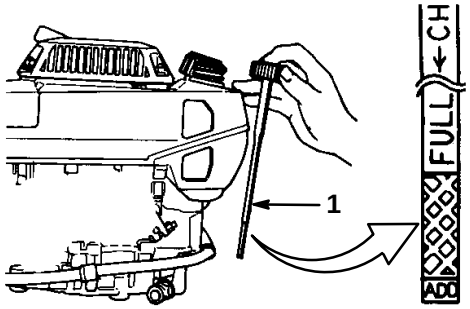


**Figure 5**

1. Dipstick

**2.** Remove the dipstick by rotating the cap counterclockwise 1/4 turn.

**3.** Wipe the dipstick clean.

**4.** Insert the dipstick into the filler neck but **do not screw it in.**

5. Remove the dipstick and check the level of the oil on the side of the dipstick with the FULL and ADD marks (Fig. 5).

6. If the level is low, add enough oil to raise the level to the FULL mark on the dipstick.

**IMPORTANT: Do not fill above the FULL mark because the engine could be damaged when started. Pour the oil slowly.**

**Oil Capacity**

| | |
|---|---|
| With Oil Filter | .8 quarts (0.75 liters) |
| Without Oil Filter | .6 quarts (0.55 liters) |

## Gasoline

**DANGER**

**POTENTIAL HAZARD**
- **In certain conditions gasoline is extremely flammable and highly explosive.**

**WHAT CAN HAPPEN**
- **A fire or explosion from gasoline can burn you and others and cause property damage.**

**HOW TO AVOID THE HAZARD**
- **Use a funnel and fill the fuel tank outdoors, in an open area, when the engine is cold. Wipe up any gasoline that spills.**
- **Do not fill the fuel tank completely full. Add gasoline to the fuel tank until the level is 1/4" to 1/2" (6 mm to 13 mm) below the bottom of the filler neck. This empty space in the tank allows gasoline to expand.**
- **Never smoke when handling gasoline, and stay away from an open flame or where gasoline fumes may be ignited by a spark.**
- **Store gasoline in an approved container and keep it out of the reach of children.**
- **Never buy more than a 30-day supply of gasoline.**

**DANGER**

**POTENTIAL HAZARD**
- **When fueling, under certain circumstances, a static charge can develop, igniting the gasoline.**

**WHAT CAN HAPPEN**
- **A fire or explosion from gasoline can burn you and others and cause property damage.**

**HOW TO AVOID THE HAZARD**
- **Always place gasoline containers on the ground away from your vehicle before filling.**
- **Do not fill gasoline containers inside a vehicle or on a truck or trailer bed because interior carpets or plastic truck bed liners may insulate the container and slow the loss of any static charge.**
- **When practical, remove gas–powered equipment from the truck or trailer and refuel the equipment with its wheels on the ground.**
- **If this is not possible, then refuel such equipment on a truck or trailer from a portable container, rather than from a gasoline dispenser nozzle.**
- **If a gasoline dispenser nozzle must be used, keep the nozzle in contact with the rim of the fuel tank or container opening at all times until fueling is complete.**

Do not use gasoline that has been stored from one season to the next. Use fresh, clean, **unleaded** regular grade gasoline. Unleaded gasoline burns cleaner, extends engine life, and promotes good starting. Leaded gasoline can be used if unleaded is not available.

Toro also recommends that Toro Stabilizer/Conditioner be used regularly during operation and storage. Toro Stabilizer/Conditioner cleans the engine during operation and prevents gum-like varnish deposits from forming during periods of storage.

1. Pull the wire off of the spark plug (Fig. 6).

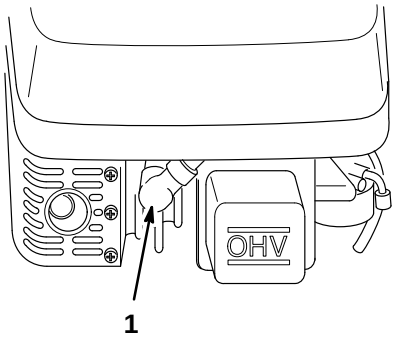


m-4353

**Figure 6**

1. Spark plug wire

2. Clean around the fuel tank cap and remove the cap from the tank (Fig. 7).

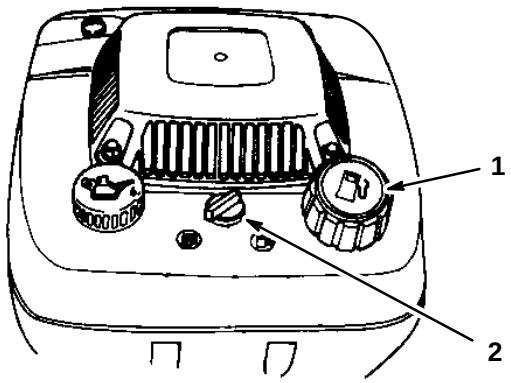


**Figure 7**

1. Fuel tank cap
2. Fuel valve

3. Using unleaded gasoline, fill the fuel tank to within 1/4" to 1/2" (6 to 13 mm) from top of tank, not into filler neck.

**IMPORTANT: Do not fill the tank more than 1/4" from the top of the tank because the gasoline must have room to expand.**

4. Install the fuel tank cap and wipe up any spilled fuel.

**IMPORTANT: Do not mix oil with the gasoline. Never use methanol, gasoline containing methanol, gasohol containing more than 10% ethanol, or white gas because the fuel system could be damaged.**

**Do not use fuel additives other than those manufactured for fuel stabilization during storage, such as Toro Stabilizer/Conditioner. Toro Stabilizer/Conditioner is a petroleum distillate based product. Toro does not recommend stabilizers with an alcohol base such as ethanol, methanol, or isopropyl. Do not use additives to enhance the power or performance of the engine.**

5. Connect the spark plug wire (Fig. 6).

# Operation

## Starting the Engine

1. Open the fuel valve (Fig. 7).
2. Move throttle to (Choke) (Fig. 8).
3. Lift the blade control bail to the handle and hold. (Fig. 8).
4. Pull the starter handle lightly until resistance is felt, then pull it sharply (Fig. 8). Allow the rope return to the handle slowly. When engine starts, regulate throttle as desired. Allow the engine to warm up. During warm up, the equipment can be operated.

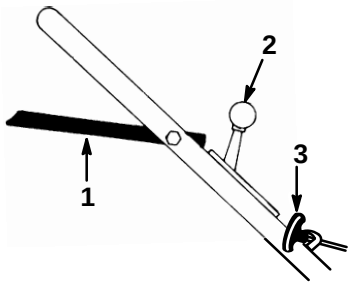


222

**Figure 8**

1. Blade control bail
2. Throttle
3. Starter handle

**Note:** If the engine fails to start after three (3) pulls, repeat steps 2–4.

## Stopping the Engine

Release the blade control bail. Both the engine and blade will stop. See your dealer immediately if they do not.

## Self–propel Drive

### (Self-propelled model only)

The mower has three ground speeds: number "1" is slow, "2" is medium, and "3" is a fast walking pace.

Ground speed control is located at rear of belt cover (Fig. 9).

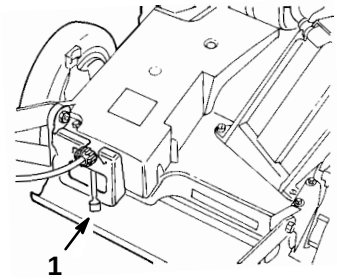


224

**Figure 9**

1. Ground speed control

1. Move ground speed control to (N) (NEUTRAL).
2. Start the engine.

**3.** To engage the self-propel drive, squeeze the control bar against the handle to the RUN/DRIVE position (Fig. 10).

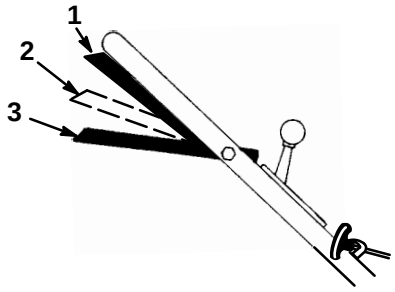


m-3769

**Figure 10**

1. RUN/DRIVE position
2. RUN/SHIFT position
3. STOP position

**Note:** Do not shift speeds while control bar is squeezed against handle in the RUN/DRIVE position; the transmission could be damaged. Move control bar to the RUN/SHIFT position (Fig. 10) when changing ground speed.

Ground speed can be varied by increasing or decreasing distance between control bar and handle. Lower control bar to slow mower when making a turn or if mower is moving too fast for you. If you lower control bar too far, the mower will stop self-propelling. Squeeze control bar closer to handle to increase ground speed. When control bar is tight against handle, mower will self-propel at maximum ground speed. Move ground speed control to (N) (neutral) when using the mower for trimming and whenever leaving mower.

# Using the Discharge Tunnel Plug

**1.** Make sure engine is off. Open the discharge door by pulling forward on the handle and moving it rearwards (Fig. 11). Hold the discharge door handle to prevent the spring-loaded door from closing while inserting the plug.

**2.** Since the plug is slightly wider than the discharge tunnel opening, you must rotate the plug clockwise slightly while inserting it (Fig. 11). Make sure the arrow on the plug decal is pointing upwards.

**3.** Push the plug all the way in until the spring clip on the bottom of the plug clicks into place, locking the plug securely into the discharge tunnel (Fig. 12). Release the discharge door handle to lock the top of the plug.

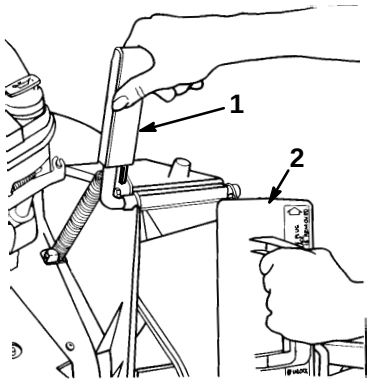


m–1914

**Figure 11**

1. Discharge door handle
2. Plug tilted clockwise

**4.** To remove the plug, move the discharge door handle rearwards while at the same time lift up the spring clip on the bottom of the plug. When the plug is unlocked, pull it out of the discharge tunnel.

**Note:** When grass is thick and lush, clippings may collect on and around the discharge tunnel plug. This may make plug removal difficult. Clean plug thoroughly after each use.

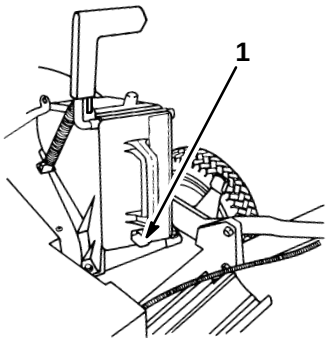


m–1915

**Figure 12**

1. Spring clip

# Using Grass Bag

Occasionally you may wish to use the grass bag for bagging extra long grass, lush grass or leaves.

**1.** Stop engine and wait for all moving parts to stop.

**2.** Ensure discharge door handle is fully forward and pin is engaged in catch (Fig. 13).

**3.** INSTALLING BAG—Slide hole in bag frame onto retaining post on discharge tunnel (Fig. 13). Set rear of bag frame onto lower handle.

**DANGER**

**POTENTIAL HAZARD**
- **Grass clippings and other objects can be thrown from an open discharge tunnel.**

**WHAT CAN HAPPEN**
- **Objects thrown with enough force could cause serious personal injury or death to operator or bystander.**

**HOW TO AVOID THE HAZARD**
- **Never open door on discharge tunnel when engine is running unless the grass bag, optional side discharge attachment or discharge tunnel plug is securely installed.**

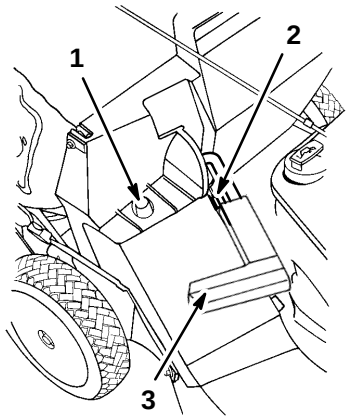


m–1912

**Figure 13**

1. Bag frame on retaining post
2. Pin engaged in catch
3. Handle fully forward. Discharge door closed.

**4.** Pull discharge door handle forward until pin clears catch and move handle rearward until pin locks in bag notch (Fig. 14). Discharge door in mower housing is now open.

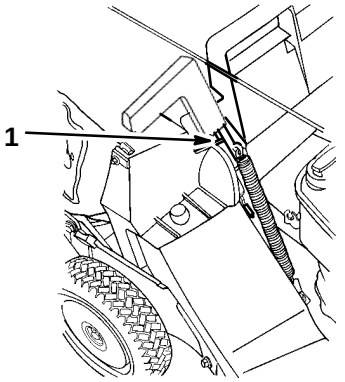


m–1913

**Figure 14**

1. Pin locked in bag notch

**DANGER**

**POTENTIAL HAZARD**
- **A worn grass bag could allow small stones and other similar debris to be thrown in operator's or bystander's direction.**

**WHAT CAN HAPPEN**
- **Thrown objects can cause serious personal injury or death to operator or bystanders.**

**HOW TO AVOID THE HAZARD**
- **Check the grass bag frequently. If it is damaged, install a new genuine TORO replacement bag.**

**DANGER**

**POTENTIAL HAZARD**
- **Thrown objects may result if discharge door does not close completely.**

**WHAT CAN HAPPEN**
- **Thrown objects can cause serious personal injury or death.**

**HOW TO AVOID THE HAZARD**
- **If discharge door cannot be closed because grass clippings clog discharge area, stop engine and gently move discharge door handle back and forth until door can be closed completely. If door still cannot be closed, remove obstruction with a stick, not your hand.**

**5.** EMPTYING BAG—Stop engine and wait for all moving parts to stop. Raise discharge door handle and move it forward to engage the locking pin with the

catch (Fig. 13). Grasp handles at front and rear of bag and lift bag off mower. Gradually tip bag forward to empty clippings.

**6.** To reinstall bag, repeat steps 3-4.

# Adjusting the Cutting Height

Each wheel is adjusted individually with a wheel height adjustment lever. Cutting heights are 1, 1-1/2, 2, 2-1/2, 3 and 3-1/2 inches (25, 38, 51, 64, 74 and 86 mm).

**DANGER**

**POTENTIAL HAZARD**
- **Adjusting the height-of-cut levers could bring your hands into contact with the moving blade.**

**WHAT CAN HAPPEN**
- **Contact with a rotating blade can cause serious injury.**

**HOW TO AVOID THE HAZARD**
- **Stop the engine and wait for all movement to stop before adjusting the cutting height.**
- **Do not put your fingers under the mower housing when adjusting the height-of-cut.**

**1.** To change the cutting height, pull the adjusting lever toward the wheel and move it to the desired position (Fig. 15).

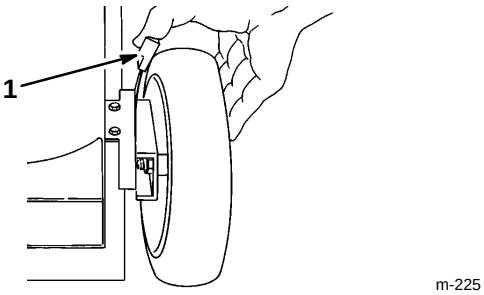


**Figure 15**

1. Wheel height adjustment lever

**2.** Release the height adjust lever and seat it securely in the notch.

**Note:** Set all four (4) wheels at the same height.

# Operating Tips

## General Tips

- Review the safety instructions and read this manual carefully before operating the mower.
- Clear the area of sticks, stones, wire, branches, and other debris which could be picked up or hit by the blade and become thrown objects.
- Keep everyone, especially children and pets, away from the area of operation.
- Avoid striking trees, walls, curbs, or other solid objects. Never deliberately mow over any object.
- If an object is struck, or the mower starts to vibrate, immediately stop the engine, disconnect the spark plug wire, and examine the mower for damage.
- Maintain a **sharp blade** throughout the cutting season. Periodically file down nicks on blade.
- Replace the blade when necessary with an original Toro replacement blade.
- Only mow dry grass or leaves. Wet grass and leaves tend to clump on the yard and may cause the mower to plug or the engine to stall. They may also be slippery to walk on and could cause you to slip and fall.

**WARNING**

**POTENTIAL HAZARD**
- **Wet grass or leaves can cause you to slip and contact the blade.**

**WHAT CAN HAPPEN**
- **Blade contact can seriously injure you.**

**HOW TO AVOID THE HAZARD**
- **Mow only in dry conditions.**

- Clean clippings or leaves from the underside of the mower deck after each mowing.
- Keep the engine in good running condition.
- Clean the air filter frequently. Mulching stirs up more clippings and dust which clogs the air filter and reduces engine performance.

## Cutting Grass

- In the heat of Summer, cut the grass at the 2, 2.5, or 3 inch height-of-cut settings. Only about $^1/_3$ of the grass blade should be cut off. Cut below the 2 inch setting only if the grass is sparse or it is Autumn when the grass grows slowly.
- When cutting grass over six inches tall, mow using the highest height-of-cut setting and a slower walking speed; then mow again at a lower setting for best lawn appearance. If the grass is too long, the mower may plug and cause the engine to stall.
- Alternate the mowing direction. This helps disperse clippings over the lawn for even fertilization.

If the finished lawn appearance is unsatisfactory, try one or more of the following:

- Sharpen the blade.
- Walk at a slower pace while mowing.
- Raise the height-of-cut setting on your mower.
- Cut grass more frequently.
- Overlap cutting swaths instead of cutting a full swath with each pass.
- Set the height-of-cut on the front wheels one notch lower than the rear wheels. (example: set the front wheels at the 2 inch setting and the rear wheels at the 2.5 inch setting)

### Cutting Leaves

- When cutting is complete, ensure that 50% of the grass blades show through the cut leaf cover. This may require one or more passes over the leaves.
- Position all wheels at the same height-of-cut setting.
- Walk at a slower mowing speed if the leaves are not being cut up finely enough to be hidden in the grass.
- If you cut up a lot of oak leaves, add lime to your grass in the spring. Lime reduces the acidity of the leaves.

# Maintenance

## Recommended Maintenance Schedule

| Service Item | Service Operation | After every use | 5 Hours | 25 Hours | 50 Hours | 100 Hours | 200 Hours |
|---|---|---|---|---|---|---|---|
| Housing | Clean built-up grass clippings and dirt. | X | | | | | |
| Fasteners | Check blade and engine mounting fasteners. Keep all fasteners tight to keep the mower in safe working condition. | | X | | | | |
| Foam Pre-cleaner | Clean every 25 hours. | | | X | | | |
| Blade | Sharpen or replace; maintain more frequently if edge is dulled quickly in rough or sandy conditions. | | | | X | | |
| Blade Brake | Check stopping time every 50 hours or at the start of each mowing season. Blade must stop within 3 seconds of releasing bail; if not, see your Authorized Toro Service Dealer for repair. | | | | X | | |
| Lubrication | Grease rear height adjustor brackets (self-propelled models). | | | | X | | |
| Fuel System | Check for leakage and/or deterioration of fuel hose. Replace if necessary. | | | | X | | |
| Fuel Filter | Clean every 50 hours. | | | | X | | |

| Service Item | Service Operation | After every use | 5 Hours | 25 Hours | 50 Hours | 100 Hours | 200 Hours |
|---|---|---|---|---|---|---|---|
| Belt Cover | Remove and clean grass, clippings and debris from under cover. | | | | X | | |
| Engine Oil | Change engine oil after first **8** hours of operation. Thereafter, change engine oil every **50** hours (without oil filter) and every **100** hours (with oil filter). | | | | X | X | |
| Paper Air Filter | Clean every **100** hours. Replace every season or **300** hours. Replace it more frequently under dusty conditions. | | | | | X | |
| Spark Plug | Inspect and clean. Replace if necessary. | | | | | X | |
| Cooling System | Clean grass, clippings, debris or dirt that may clog engine air cooling fins and starter. Clean more frequently if operated under dirty or high chaff conditions. | | | | | X | |
| Oil Filter | Change oil filter every 200 hours. | | | | | | X |

**CAUTION**

**POTENTIAL HAZARD**
- **If you leave the wire on the spark plug, someone could start the engine.**

**WHAT CAN HAPPEN**
- **Accidental starting of engine could seriously injure you or other bystanders.**

**HOW TO AVOID THE HAZARD**
- **Pull the wire off of the spark plug before you do any maintenance. Also push wire aside so it does not accidentally contact spark plug.**

## Air Filter

Clean the foam pre-cleaner every 25 hours of operation. Clean the paper air filter every 100 hours of operation. Replace the paper air filter once every season or every 300 hours of operation; replace it more frequently under dusty conditions.

**IMPORTANT: Do not operate the engine without the air filter assembly; extreme engine damage will occur.**

1. Stop the engine and pull the wire off of the spark plug (Fig. 6).
2. Remove the bolt securing the air cleaner cover (Fig. 16).
3. Remove the cover and clean it thoroughly (Fig. 16).

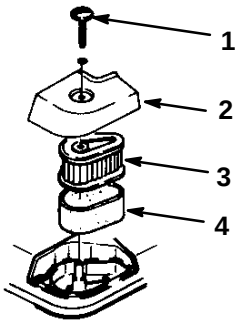


**Figure 16**

1. Bolt
2. Cover
3. Paper air filter
4. Foam pre-cleaner

**4.** Remove the foam pre–cleaner and wash it with a mild detergent and water, then blot it dry (Fig. 16).

**5.** Saturate the pre-cleaner with oil, then squeeze it (do not twist) to remove excess oil.

**6.** Remove the paper air filter and discard it (Fig. 16).

**IMPORTANT: Do not try to clean a paper filter.**

**7.** Install the foam pre-cleaner on the new paper air filter.

**8.** Reinstall the air cleaner assembly.

**9.** Reinstall the cover and secure it with the bolt.

## Draining Gasoline and Cleaning Fuel Filter

Clean the fuel filter element every 50 hours of operation.

**1.** Stop the engine and wait for it to cool.

**IMPORTANT: Drain gasoline from a cold engine only.**

**2.** Pull the wire off of the spark plug (Fig. 6).

**3.** Remove the fuel tube by loosening the tube clamp at the carburetor (Fig. 17).

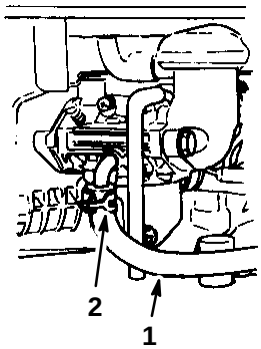


**Figure 17**

1. Fuel tube
2. Tube clamp

**4.** Open the fuel valve by turning the lever to the open position (Fig. 7).

**5.** Drain gasoline completely from the tank and fuel line into an approved gasoline container.

**6.** Remove the fuel tube on the fuel tank by loosening the tube clamp (Fig. 18).

**7.** Remove the fuel filter from the fuel tank (Fig. 17).

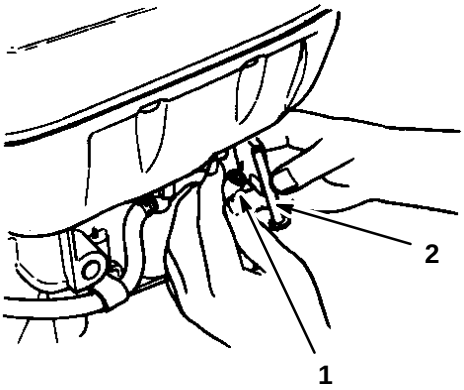


**Figure 18**

1. Fuel tube
2. Fuel filter

**8.** Clean the fuel filter with high flash-point solvent.

**9.** Firmly reinstall the filter, tubes and clamps.

## Engine Oil

Change the engine oil after the first **8** hours of operation and after **100** hours of operation or yearly thereafter.

**1.** Run the engine to warm the oil.

**WARNING**

**POTENTIAL HAZARD**
- **Oil may be hot after engine has been run.**

**WHAT CAN HAPPEN**
- **Contact with hot oil can cause severe personal injury.**

**HOW TO AVOID THE HAZARD**
- **Avoid contact with oil while draining oil.**

**2.** Stop the engine and pull the wire off of the spark plug (Fig. 6).

**3.** Place a suitable drain pan under the side oil drain plug.

**4.** Raise the left side of the mower at least 12 inches and open the side oil drain plug (Fig. 19).

**5.** Insert the oil drain tube over the drain plug and lower mower (Fig. 19).

6. Raise right side of mower until all oil has flowed into the drain pan.

7. Remove the oil drain tube and retighten the side oil drain plug.

**IMPORTANT: Do not over-tighten the side oil drain plug. It may cause damage to the crankcase cover. Specified torque is 23 N-m (190 in-lbs.).**

8. Recycle the oil as per local codes.

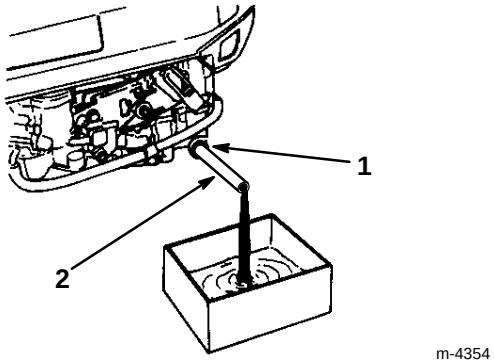


**Figure 19**

1. Side oil drain plug
2. Oil drain tube

9. Fill the crankcase to the FULL line on the dipstick with fresh oil. Refer to the Oil section, page 6, for specifications.

10. Wipe up any spilled oil.

## Oil Filter

Change the oil filter every 200 hours of operation.

1. Run the engine to warm the oil.

**WARNING**

**POTENTIAL HAZARD**
- **Oil may be hot after engine has been run.**

**WHAT CAN HAPPEN**
- **Contact with hot oil can cause severe personal injury.**

**HOW TO AVOID THE HAZARD**
- **Avoid contact with oil while draining oil.**

2. Stop the engine and pull the wire off of the spark plug (Fig. 6).

3. Drain the engine oil as specified in Engine Oil section, page 14.

4. Place a suitable drain pan under the oil filter connection (Fig. 20).

5. Rotate the oil filter counterclockwise to remove it.

6. Coat a film of clean engine oil onto seal of new filter.

7. Install new filter by rotating it clockwise until seal contacts mounting surface. Then rotate filter 3/4 turn more by hand.

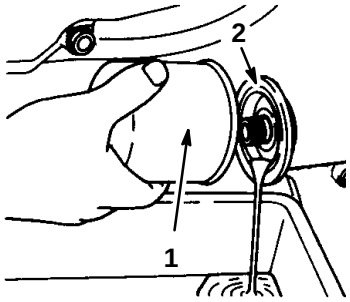


**Figure 20**

1. Oil filter
2. Mounting surface

8. Fill the crankcase to the FULL line on the dipstick with fresh oil. Refer to the Oil section, page 6, for specifications.

9. Reinstall the spark plug wire.

10. Run the engine for about 3 minutes. Stop engine and check oil leakage around the filter.

11. Add oil to compensate for oil level reduction due to oil filter capacity. Refer to the Oil section, page 6, for oil level check.

## Spark Plug

Use an NGK BPR5ES spark plug or equivalent. The correct air gap is 0.030” (0.76 mm). Remove the plug after every 100 operating hours and check its condition.

1. Stop the engine and pull the wire off the spark plug (Fig. 6).

2. Clean around the spark plug and remove it from the cylinder head.

**IMPORTANT: Replace a cracked, fouled, or dirty spark plug. Do not clean the electrodes because engine damage could result from grit entering the cylinder.**

3. Set the gap on the new plug to 0.030” (0.76 mm) (Fig. 21).

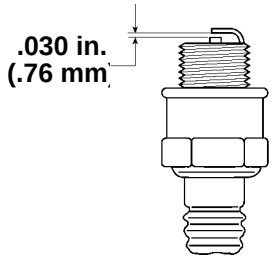


986

**Figure 21**

4. Install the spark plug and gasket seal. Tighten the plug to 17 ft-lb (23 N·m).
5. Reconnect the spark plug wire (Fig. 6).

# Adjusting the Self-propel Cable

## (self-propelled model only)

If mower does not self-propel or self-propels when control bar is **more** than 1-1/2 inches from the handle, adjust wheel drive control knob on rear of gear box.

1. Close door in mower housing and remove grass bag.
2. ADJUSTMENT (Fig. 22)—Rotate control knob clockwise 1/2 turn if mower does not self-propel. If mower creeps forward, rotate knob 1/2 turn counterclockwise to loosen belt.
3. CHECK ADJUSTMENT—Slowly pull mower backward while control bar is gradually moved toward handle. Adjustment is correct when rear wheels stop turning and control bar is about one inch from handle (Fig. 23).

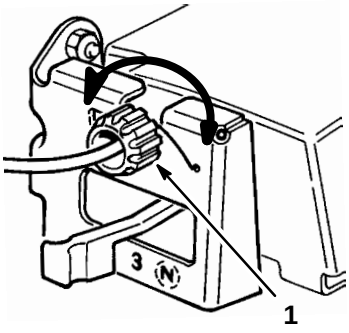


228

**Figure 22**

1. Control knob

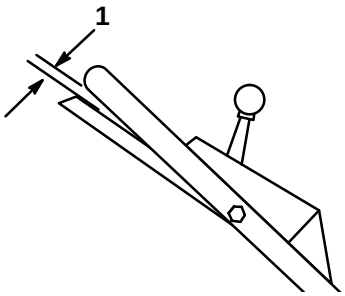


**Figure 23**

1. One inch

# Adjusting the Blade Brake Cable

Whenever a new blade brake cable assembly is installed, an adjustment is required.

1. Stop engine and wait for all moving parts to stop. Pull wire off spark plug (Fig. 6).
2. CHECK ADJUSTMENT (Fig. 24 & 25)—Move control bar toward handle until slack in wire is removed. Gap between brake lever and handle must be $^{3}/_{16}$”-$^{1}/_{4}$”. See Step 3 for adjustment.
3. ADJUST CABLE CONDUIT—

   **Self-propelled Model (Fig. 24)**

   Loosen nut on cable bracket. Insert $^{3}/_{16}$”-$^{1}/_{4}$” object between brake lever and handle. Pull down on cable conduit until all slack is removed from wire. Then tighten nut.

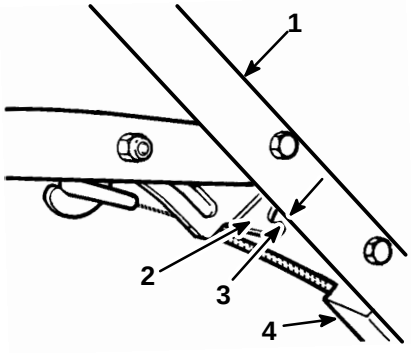


**Figure 24**

1. Handle
2. Brake lever
3. 3/16”-1/4”
4. Cable bracket

### Hand Push Model (Fig. 25)

Loosen jam nut on brake cable. Insert $^{3}/_{16}$"-$^{1}/_{4}$" object between brake lever and handle. Turn cable adjuster on brake cable until slack is removed. Then tighten nut.

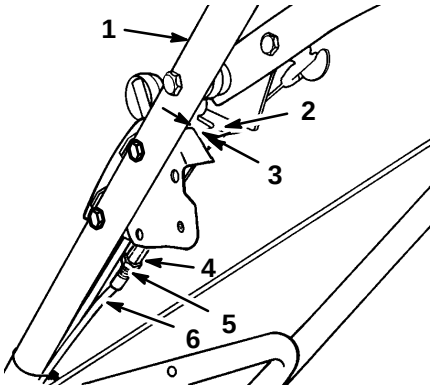


483

**Figure 25**

1. Handle
2. Brake lever
3. 3/16"-1/4"
4. Cable adjuster
5. Jam nut
6. Cable conduit

# Maintaining the Blade

A straight, sharp blade provides maximum cutting performance. Regularly inspect and sharpen the blade.

**WARNING**

**POTENTIAL HAZARD**
- **The blade is sharp.**

**WHAT CAN HAPPEN**
- **Contact with a sharp blade can cause serious personal injury.**

**HOW TO AVOID THE HAZARD**
- **Wear gloves or wrap the sharp edges of the blade with a rag.**

**1.** Stop the engine and pull the wire off of the spark plug (Fig. 6).

**WARNING**

**POTENTIAL HAZARD**
- **Gasoline is extremely flammable, highly explosive and under certain conditions can cause personal injury or property damage.**

**WHAT CAN HAPPEN**
- **Tipping the mower may cause fuel leakage from the carburetor or fuel tank.**

**HOW TO AVOID THE HAZARD**
- **Avoid fuel spills by running the engine dry or removing gas with a hand pump; never siphon.**

**2.** Drain the gasoline from the fuel tank. Refer to the Draining Gasoline and Cleaning Fuel Filter section, page 14.

**3.** Tip the mower on its left side (Fig. 26). Avoid rotating the blade because starting problems may result.

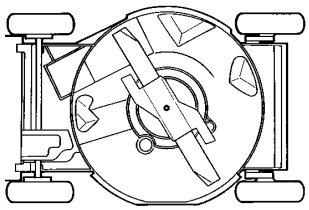

757

**Figure 26**

## Inspecting the Blade

**1.** Examine the blade for sharpness and wear, especially where flat and curved parts meet (Fig. 27A).

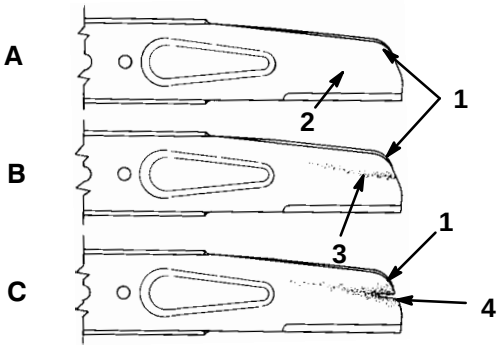


270

**Figure 27**

1. Sail
2. Flat part of blade
3. Wear
4. Slot formed

**2.** Complete one of the following:

A. If a slot or wear is noticed, (Fig. 27B & C), replace the blade. Refer to the Removing and Installing the Blade sections.

B. If the blade is nicked or dull, sharpen it. Refer to the Removing, Sharpening, Balancing, and Installing the Blade sections.

C. If there are no signs of wear of dullness, return the mower to the upright position and replace the spark plug wire (Fig. 6).

**DANGER**

**POTENTIAL HAZARD**
- **A worn or damaged blade could break and a piece of the blade could be thrown into operator's or bystander's area.**

**WHAT CAN HAPPEN**
- **A thrown piece of the blade could cause serious personal injury or death to the operator or bystanders.**

**HOW TO AVOID THE HAZARD**
- **Inspect the blade periodically for wear or damage.**
- **Replace a worn or damaged blade.**

## Removing the Blade

**1.** Grasp the end of the blade using a rag or thickly padded glove.

**2.** Remove the blade bolt, lockwasher, blade accelerator and blade (Fig. 28).

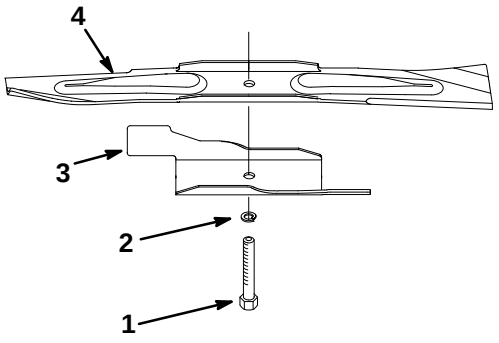


1627

**Figure 28**

1. Blade bolt
2. Lock washer
3. Accelerator
4. Blade

## Sharpening the Blade

Using a file, sharpen top side of the blade and maintain the original cutting angle (Fig. 29).

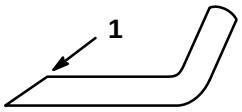


153

**Figure 29**

1. Sharpen at this angle only

**Note:** The blade will remain balanced if same amount of material is removed from both cutting edges.

## Balancing the Blade

**1.** Check the balance of the blade by placing the center hole of the blade over a nail or screwdriver shank clamped horizontally in a vise (Fig. 30).

**Note:** You can also check the balance using a commercially manufactured, blade balancer.

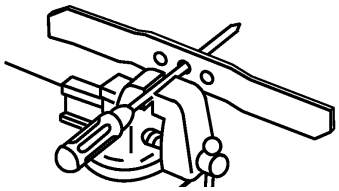

1007

**Figure 30**

**2.** If either end of the blade rotates downward, file that end (not the cutting edge or the end near the cutting edge). The blade is properly balanced when neither end drops.

## Installing the Blade

**1.** Install the blade, blade accelerator, lockwasher, and blade bolt (Fig. 28).

**2.** Tighten the blade bolt to 50 ft-lb (68 N·m).

**WARNING**

**POTENTIAL HAZARD**
- **Operating the mower without the accelerator in place could cause the blade to flex, bend, or break.**

**WHAT CAN HAPPEN**
- **A broken blade could cause serious injury or death to the operator or bystanders.**

**HOW TO AVOID THE HAZARD**
- **Do not operate the mower without the accelerator.**

# Lubricating the Self–propel Drive

1. Wipe the grease fittings on the rear height-of-cut adjustors (Fig. 31) with a clean rag.

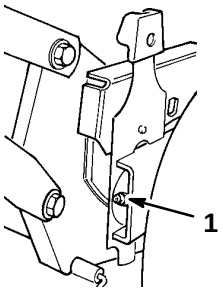


232

**Figure 31**

1. Grease fitting

2. Install a grease gun onto each fitting in turn and gently apply one or two pumps of #2 multi-purpose lithium grease to each.

**IMPORTANT: Excess grease may damage seals and prevent proper wheel clutch operation.**

# Lubricating the Gear Case

## (self-propelled model only)

After every 100 operating hours, grease the gear case with #2 Multi-Purpose Lithium Base Grease.

1. Install grease gun onto fitting through belt cover opening (Fig. 32). Gently apply 1-2 pumps of grease.

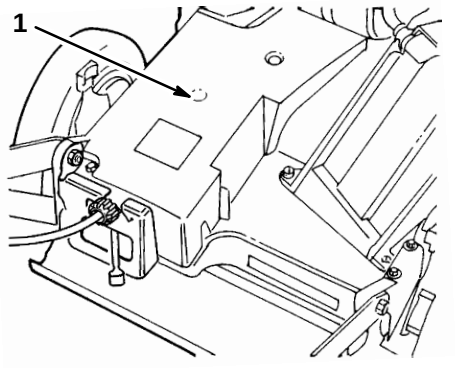


224

**Figure 32**

1. Grease fitting

# Cleaning the Underside of the Mower Housing

To ensure best performance, keep the underside of the mower housing clean. Be especially careful to keep the kickers free of debris (Fig. 33).

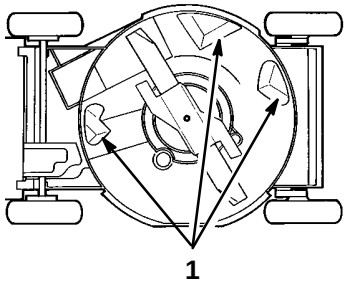


757

**Figure 33**

1. Kickers

## Washing Method

1. Position the mower on a flat, concrete or asphalt surface near a garden hose.
2. Start the engine.
3. Hold the running garden hose at handle level and direct the water to flow on the ground just in front of the right rear tire (Fig. 34).

   The blade will draw in water and wash out clippings. Let the water run until you no longer see clippings being washed out from under housing.

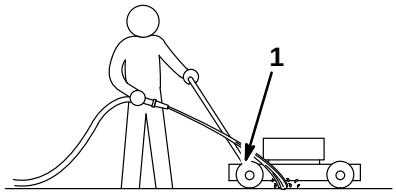


1093

**Figure 34**

1. Rear right wheel

4. Stop the engine.
5. Turn off the garden hose.
6. Start the mower and let it run for a few minutes to dry out the moisture on the mower and its components.
7. While the engine is running, engage and disengage the traction drive several times to dry it out.

### Scraping Method

If washing does not remove all debris from under the mower, tip it and scrape it clean.

1. Pull the wire off of the spark plug (Fig. 6).
2. Drain the gasoline from the fuel tank. Refer to the Draining Gasoline and Cleaning Fuel Filter section, page 14.

**WARNING**

**POTENTIAL HAZARD**
- **Gasoline is extremely flammable, highly explosive and under certain conditions can cause personal injury or property damage.**

**WHAT CAN HAPPEN**
- **Tipping the mower may cause fuel leakage from the carburetor or fuel tank.**

**HOW TO AVOID THE HAZARD**
- **Avoid fuel spills by running the engine dry or removing gas with a hand pump; never siphon.**

3. Tip the mower on its left side (Fig. 33).
4. Remove dirt and grass clippings with a hardwood scraper. Avoid burrs and sharp edges.

**IMPORTANT: Move the blade as little as possible to avoid future starting problems.**

5. Turn the mower upright.
6. Refill the gas tank.
7. Connect the spark plug wire (Fig. 6).

## Cleaning Under the Belt Cover

Keep area under belt cover free of debris.

1. With the engine turned off, remove the (2) bolts securing the belt cover (Fig. 35) to the mower housing.
2. Lift off the cover and brush out all debris from the belt area.
3. Install the belt cover.

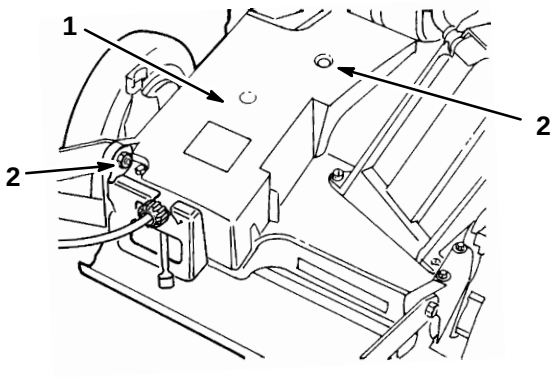


224

**Figure 35**

1. Belt cover
2. Bolt (2)

## Servicing Wheels

### Removal (Fig. 36)

1. Stop engine and wait for all moving parts to stop. Pull wire off spark plug.
2. Remove capscrew, wheel spacer, and locknut mounting wheel to pivot arm.
3. Separate wheel halves from tire by removing four capscrews and locknuts.

**Note:** If bearings are to be removed from bearing/hub assembly, remove by pressing on bearing spacer.

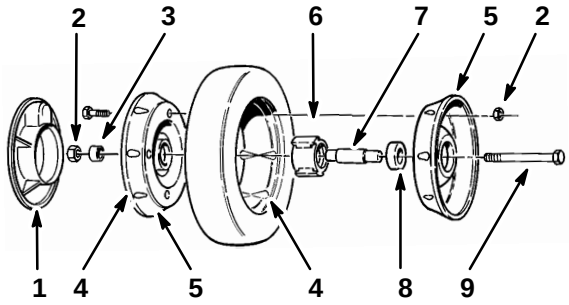


209

**Figure 36**

1. Plastic cover (rear wheels only)
2. Locknuts
3. Wheel spacer
4. Lug
5. Wheel half
6. Bearing/hub assembly
7. Bearing spacer
8. Bearing (2)
9. Capscrew

### Assembly (Fig. 36)

1. Position tire onto one wheel half by aligning lugs on each.
2. Place bearing/hub assembly into center hole of wheel half. Make sure legs of hub are positioned over flange of hole.
3. Place other wheel half onto bearing/hub assembly, aligning wheel and tire lugs and mounting holes.
4. Using two 1/4-20 x 1.50″ lg. fully threaded screws or bolts and non-locking nuts, loosely secure wheel halves together. Mount screws or bolts in opposing holes.
5. Check alignment of all parts and tighten screws, alternating from side to side for a uniform fit, until wheel halves are drawn together.
6. Install two capscrews and locknuts, previously removed, in remaining holes in wheel halves and tighten. Remove two long screws or bolts and replace with two capscrews and locknuts.
7. Reinstall wheel to pivot arm with capscrews, spacer, and locknut. Make sure spacer is positioned between wheel hub and pivot arm.

# Troubleshooting

Your mower was designed and built for trouble-free operation. Check the following components and items carefully. If a problem continues, see your Authorized Toro Service Dealer.

| PROBLEM | CORRECTIVE ACTION |
|---|---|
| Engine will not start | 1. Fill fuel tank with fresh gasoline<br>2. Move throttle lever to the CHOKE position<br>3. Spark plug<br>• Connect spark plug wire<br>• Clean spark plug, check spark plug gap, replace if damaged |
| Engine starts hard or loses power | 1. Drain and refill fuel tank with fresh gasoline<br>2. Clean air cleaner pre-filter<br>3. Replace paper air filter<br>4. Clean underside of mower deck<br>5. Clean spark plug, check spark plug gap, replace if damaged<br>6. Check engine oil |
| Engine runs rough | 1. Connect spark plug wire<br>2. Clean spark plug, check spark plug gap, replace if damaged<br>3. Move throttle lever from SLOW to FAST position<br>4. Clean air cleaner pre-filter<br>5. Replace paper air filter |
| Mower or engine vibrates excessively | 1. Balance blade. Or if blade is bent, straighten it.<br>2. Tighten blade mounting bolt<br>3. Clean underside of mower deck<br>4. Tighten engine mounting bolts |

| PROBLEM | CORRECTIVE ACTION |
|---|---|
| Uneven cutting pattern | 1. Place all four (4) wheels at same height<br>2. Sharpen and balance blade<br>3. Change mowing pattern<br>4. Clean underside of mower deck |
| Discharge chute plugs | 1. Move throttle lever from SLOW to FAST position<br>2. Raise cutting height<br>3. Slow down<br>4. Allow grass to dry before mowing<br>5. Clean underside of mower deck |
| Will not self-propel | 1. Adjust self-propelled cable<br>2. Clean debris from under belt cover. |

# Storage

To prepare the lawn mower for off-season storage, perform the recommended maintenance procedures. Refer to the Maintenance section, page 12.

Store the mower in a cool, clean, dry place. Cover the mower to keep it clean and protected.

## Fuel

**WARNING**

**POTENTIAL HAZARD**
- **Gasoline can vaporize if stored over long periods of time.**

**WHAT CAN HAPPEN**
- **Vaporized fuel can explode if it comes into contact with open flame.**

**HOW TO AVOID THE HAZARD**
- **Do not store gasoline (fuel) over long periods of time.**
- **Do not store mower with fuel in the tank in an enclosure with an open flame. (Example: a furnace or water heater pilot light.)**
- **Allow the engine to cool before storing in any enclosure.**

We recommend Toro Fuel Conditioner to stabilize fuel for storage. If possible, the last fuel fill of the year should be treated with Toro Fuel Conditioner.

Run the fuel tank empty when mowing the last time prior to storage. The smaller the amount of fuel in the tank, the shorter the time required to run the fuel system dry. Run the mower until engine stops from lack of fuel.

## Preparing the Engine

1. While the engine is still warm, drain oil from crankcase. Refer to the Engine Oil section, page 14.
2. Remove the spark plug (Fig. 6).
3. Using an oil can, squirt about one tablespoon of oil through spark plug hole.
4. Slowly rotate the engine several times, using the starter rope, to distribute the oil.
5. Install spark plug but **do not** connect the spark plug wire.

## Cleaning the Mower

1. Clean the mower housing. Refer to the Cleaning the Underside of the Mower Housing section, page 19.
2. Clean any dirt and chaff from the cylinder, cylinder head fins, and blower housing. Also remove grass clippings, dirt, and grime from external parts of the engine, shrouding, and top of the mower housing.

## General

1. Check the condition of the blade. Refer to the Maintaining the Blade section, page 17.
2. Tighten all nuts, bolts, and screws.
3. Lubricate the wheels. Refer to the Lubricating the Self–Propel Drive section, page 19.
4. Touch up all rusted or chipped paint surfaces. Paint is available from an Authorized Toro Service Dealer.

## Removing From Storage

1. Check and tighten all fasteners.
2. Remove the spark plug (Fig. 6) and spin the engine rapidly using the starter to blow excess oil from the cylinder.
3. Clean the spark plug or replace it if it is cracked, broken, or the electrodes are worn.
4. Install the spark plug and torque it to 17 ft.-lbs. (23 N·m).
5. Perform the recommended maintenance procedures. Refer to the Maintenance section, page 12.
6. Fill the fuel tank (Fig. 7) with fresh, clean gasoline.
7. Check the engine oil level.
8. Connect the spark plug wire (Fig. 6).

# Accessories

Accessories may have been shipped with your mower or are available from your Authorized Toro Dealer.

1. **Side Discharge Kit, Model No. 59199**—Install in seconds. Rear mounted in place of the grass bag. Disperses clippings while trimming on both sides (Fig. 37).

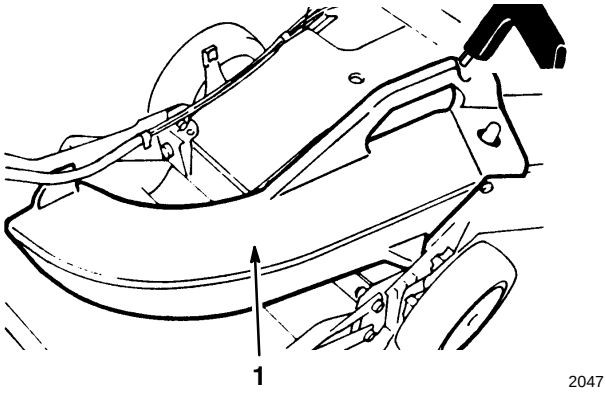


**Figure 37**

1. Side discharge chute

Gas, Cordless, Electric, and 21" Commercial Duty Walk Mowers

# THE TORO PERFORMANCE WARRANTY

A Full Warranty
(Limited Warranty for Commercial Use)

## What Is Covered By This Express Warranty?

From the date of purchase, for the periods listed below, the Toro Company promises to repair any Toro Product used for normal residential purposes* if defective in materials or workmanship or if it stops functioning due to the failure of a component.

- Super Recycler® Walk Mowers . 5 year full warranty
- VacuPower™ Walk Mowers . . . . 5 year full warranty
- All Others . . . . . 2 year full warranty

The cost of parts and labor is included, but the customer pays the transportation costs.

## What Products Are Covered By This Warranty?

This warranty applies to all gas, cordless, and electric consumer walk power mowers.

## How About Commercial Use?

Toro Walk Power Mowers used for commercial, institutional or rental use are warranted against defects in material or workmanship. Components failing due to normal wear are not covered by this warranty. The following time periods apply from the date of purchase:

| Products | Warranty Period | |
|---|---|---|
| | Engine | Entire Unit |
| • 21" Commercial Duty Walk Mowers . . . . . | 2 year limited | 1 year limited |
| • All Others . . . . . | 45 day limited | 45 day limited |

## How Do You Get Warranty Service?

Should you feel your Toro Product requires warranty service, contact the dealer who sold you the product or any Authorized Toro Service Dealer or Toro Master Service Dealer. The Yellow Pages of your telephone directory is a good reference source. The dealer will either arrange service at his/her dealership or recommend another Authorized Service Dealer who may be more convenient. You may need proof of purchase (copy of registration card, sales receipt, etc.) for warranty validation.

If for any reason you are dissatisfied with the Service Dealer's analysis of the defect in materials or workmanship or if you need a referral to a Toro Service Dealer, please feel free to contact us at the following address:

Toro Customer Service Department
8111 Lyndale Avenue South
Bloomington, MN 55420−1196
612−888−8801
800−348−2424

## What Must You Do To Keep The Warranty In Effect?

You must maintain your Toro Product by following the maintenance procedures described in the operator's manual. Such routine maintenance, whether performed by a dealer or by you, is at your expense.

## What Does This Warranty Not Cover? and How Does Your State Law Relate To This Warranty?

There is no other express warranty except for special emission system coverage on some products and the Toro Starting Guarantee on GTS Engines. This express warranty does not cover:

- Cost of regular maintenance service or parts, such as filters, fuel, lubricants, oil changes, spark plugs, blade sharpening, blade worn out, cable/linkage adjustments or brake and clutch adjustments.

- Any product or part which has been altered or misused or required replacement or repair due to accidents or lack of proper maintenance.

- Repairs necessary due to improper fuel, contaminants in the fuel system, or failure to properly prepare the fuel system prior to any period of non−use over three months.

- Repairs necessary due to improper battery care, electrical supply irregularities, or failure to properly prepare the mower prior to any period of non−use.

- Pickup and delivery charges.

All repairs covered by this warranty must be performed by an Authorized Toro Service Dealer using Toro approved replacement parts.

Repair by an Authorized Toro Service Dealer is your sole remedy under this warranty.

**The Toro Company is not liable for indirect, incidental or consequential damages in connection with the use of the Toro Products covered by this warranty, including any cost or expense of providing substitute equipment or service during reasonable periods of malfunction or non−use pending completion of repairs under this warranty. Some states do not allow exclusions of incidental or consequential damages, so the above exclusion may not apply to you.**

**This warranty gives you specific legal rights, and you may also have other rights which vary from state to state.**

* Normal residential purposes means mowing the lawn on the same lot as your home. Use at more than one location is considered commercial use and the commercial use warranty would apply.

## COUNTRIES OTHER THAN THE UNITED STATES OR CANADA

Customers who have purchased Toro products exported from the United States or Canada should contact their Toro Distributor (Dealer) to obtain guarantee policies for your country, province, or state. If for any reason you are dissatisfied with your Distributor's service or have difficulty obtaining guarantee information, contact the Toro importer. If all other remedies fail, you may contact us at The Toro Company.

Rev. 10/21/1998