FORM NO. 3322–518

TORO®

Super Recycler®

Walk-behind Power Mower

Model No. 20044 – 9900001 & Up

Operator’s Manual

Para obtener una versión gratis de este manual en español, escriba a la dirección indicada más abajo. Asegúrese de indicar el modelo y el número de serie de su producto.

Pour obtenir gratuitement une version en français de ce manuel, écrivez à l’adresse ci-dessous. N’oubliez pas d’indiquer les numéros de modèle et de série de votre produit.

The Toro Company, Attn: Parts Dept., 8111 Lyndale Ave S, Bloomington, MN 55420–1196

Domestic English (EN)

Contents

	Page
Introduction	2
Safety	3
Safe Operating Practices	3
Safety and Instruction Decals	5
Assembly	5
Handle	5
Installing the Starter Rope	6
Before Starting	6
Adding/Checking the Oil	6
Adding Gasoline	6
Operation	7
Controls	7
Starting the Engine	7
Stopping the Engine	8
Operating the Self-propel Drive	8
Pulling the Mower Rearward	8
Adjusting the Cutting Height	8
Cutting Tips	9
Maintenance	10
Recommended Maintenance Schedule	10
Cleaning the Air Filter	11
Draining Gasoline and Cleaning the Fuel Filter	11
Changing the Oil	11
Spark Plug	12
Adjusting the Self-propel Cable	12
Maintaining the Blade	13
Lubricating the Self–propel Drive	14
Cleaning the Underside of the Mower Housing	15
Cleaning Under the Belt Cover	16
Storage	16
Fuel	16
Preparing the Engine	16
General	16
Removing From Storage	16
Accessories	17
The Toro Starting Guarantee	18
Warranty	20

The engine exhaust from this product contains chemicals known to the State of California to cause cancer, birth defects, or other reproductive harm.

Note: This engine is not equipped with a spark-arrester muffler. It is a violation of California Public Resource Code Section 4442 (or 4443) to use or operate this engine on any forest-covered, brush-covered, or grass-covered land. Other states or federal areas may have similar laws.

Introduction

Thank you for purchasing a Toro product.

All of us at Toro want you to be completely satisfied with your new product, so feel free to contact your local Authorized Service Dealer for help with service, genuine Toro parts, or other information you may require.

Whenever you contact your Authorized Service Dealer or the factory, always know the model and serial numbers of your product. These numbers will help the Service Dealer or Service Representative provide exact information about your specific product. You will find the model and serial number decal located in a unique place on the product (Fig. 1).

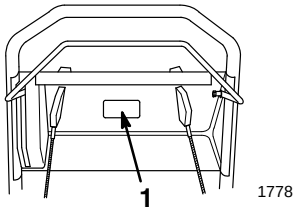

Figure 1

1. Model and serial number decal

For your convenience, write the product model and serial numbers in the space below.

Model No. _____

Serial No. _____

Read this manual carefully to learn how to operate and maintain your product correctly. Reading this manual will help you and others avoid personal injury and damage to the product. Although Toro designs, produces and markets safe, state-of-the-art products, you are responsible for using the product properly and safely. You are also responsible for training persons who you allow to use the product about safe operation.

The Toro warning system in this manual identifies potential hazards and has special safety messages that help you and others avoid personal injury, even death.

©The Toro Company – 1999
All Rights Reserved

Printed in USA

DANGER, WARNING and CAUTION are signal words used to identify the level of hazard. However, regardless of the hazard, be extremely careful.

DANGER signals an extreme hazard that will cause serious injury or death if the recommended precautions are not followed.

WARNING signals a hazard that may cause serious injury or death if the recommended precautions are not followed.

CAUTION signals a hazard that may cause minor or moderate injury if the recommended precautions are not followed.

Two other words are also used to highlight information. “Important” calls attention to special mechanical information and “Note” emphasizes general information worthy of special attention.

Safety

This machine meets or exceeds CPSC blade safety requirements for walk–behind rotary mowers and the B71.1 specifications of the American National Standards Institute, in effect at time of production. However, improper use or maintenance by the operator or owner can result in injury. To reduce the potential for injury, comply with these safety instructions and always pay attention to the safety alert ⚠ symbol which means CAUTION, WARNING or DANGER—“personal safety instruction.” Failure to comply with the instruction may result in personal injury.

Safe Operating Practices

This product is capable of amputating hands and feet and throwing objects. Always follow all safety instructions to avoid serious injury or death.

POTENTIAL HAZARD
- **Engine exhaust contains carbon monoxide, which is an odorless, deadly poison.**

WHAT CAN HAPPEN
- **Carbon monoxide can kill you and is also known to the State of California to cause birth defects.**

HOW TO AVOID THE HAZARD
- **Do not run engine indoors or in an enclosed area.**

This mower is designed for cutting and recycling grass or, when equipped with a grass bag, for catching cut grass. Any use for purposes other than these could prove dangerous to user or bystanders.

General Operation

- Read this manual carefully before operating the mower. Become familiar with the controls and proper use of the mower. Never allow children under 16 years of age to operate the mower. Never allow adults to operate mower without proper instructions.
- The operator of the mower is responsible for keeping everyone, especially children and pets, away from area of operation. The operator is responsible for accidents or hazards occurring to other people or their property.
- Thoroughly inspect area where mower will be used and remove sticks, stones, wire, and debris. Watch for foreign objects while mowing.
- Wear long pants and substantial shoes. Do not operate mower while wearing open-toed shoes, jewelry, loose clothing or when barefoot.
- Always wear safety glasses or eye shields during operation to protect eyes from foreign objects that may be thrown from the machine. Wearing of hearing protection, protective gloves and a safety helmet is advisable.
- Check fuel level before starting engine. Because fuel is highly flammable, handle it carefully.
  - Use an approved container.
  - Fill fuel tank outdoors, not indoors. **NEVER ADD FUEL TO AN ENGINE THAT IS RUNNING OR HOT.**
  - Do not smoke while refueling.
  - Install gas cap on fuel container and gas tank, and wipe up any spilled gasoline before starting engine.
- Keep all guards, shields, grass catchers and safety devices in place. Repair or replace damaged parts, including decals. Check all safety devices before each use.
- Before using, always visually inspect to see that the blades, blade fasteners and cutter assembly are not worn or damaged. Replace worn or damaged blades and fasteners in sets to preserve balance.
- Traction drive, blade and engine are designed to stop when control bar is released. Ensure control and brake function properly before each use of mower.
- Disengage the self-propelled mechanism or drive clutch before starting the engine.

While Operating

- Do not run engine indoors.
- Start the engine carefully according to instructions and with feet well away from the blade.
- Always maintain secure footing. Keep a firm grip on the handle and walk; never run. Never operate mower in wet grass. Mow only in daylight or in good artificial light.
- Mow across the face of slopes; never up and down. Use extreme caution when changing direction on slopes. Do not mow excessively steep slopes. Wear skid resistant shoes on slopes.
- Keep face, hands, and feet away from the mower housing and cutter blade when the engine is running. Blade can cause injury to hands and feet.
- Use extreme caution when reversing or pulling the mower toward you.
- Stay behind the handle until the engine stops and keep clear of discharge opening at all times.
- When bagging grass, stop engine and stay behind handle until all moving parts stop before removing and emptying bag.
- When mowing, ensure grass bag is installed over discharge opening.
- Shut engine off and stay behind handle until all moving parts stop before unclogging chute.
- Since the blade rotates for a few seconds after the control bar is released, stay behind the handle until the engine stops.
- After striking a foreign object or if mower vibrates abnormally, stop engine and remove wire from spark plug. Check mower for damage and make all repairs before using mower again. If major repairs are ever needed or if assistance is desired, contact your local Authorized Toro Service Dealer.
- Stop the engine and wait for all moving parts to stop before adjusting the height-of-cut.
- Stop the blade when pushing the mower outside the lawn area and over dirt or gravel driveways.
- Stop engine before leaving the operator's position – behind the handle. Disconnect wire from spark plug if mower will be unattended.
- Do not touch any engine components while it is running or shortly after it is stopped because engine will be hot enough to cause a burn.
- Refuel only when engine is cool.
- If mower must be lifted to be transported, turn off engine and stay behind the handle until all moving parts stop. Disconnect the spark plug wire and wait for the engine to cool.

Maintenance

- Perform only those maintenance instructions described in this manual. If major repairs are ever needed or if assistance is desired, contact your local Authorized Toro Service Dealer.
- Before mower is cleaned, inspected, serviced, or adjusted, stop engine and disconnect wire from spark plug. Keep wire away from plug to prevent someone from accidentally starting the engine.
- To ensure the mower is in safe operating condition, frequently check and keep all nuts, bolts, and screws tight. Ensure blade bolt is tightened to 50 ft.-lbs. (68 N·m).
- When servicing blade, refer to Maintaining the Blade, page 13, for correct installation and servicing procedures.
- To reduce fire hazard, keep engine free of excessive grease, grass, leaves, and accumulations of dirt.
- Do not overspeed the engine by changing governor settings.
- Check grass catcher bag frequently for wear or deterioration. Replace with a new bag when worn or damaged for your protection.
- Allow engine to cool before storing mower in any enclosure. Do not store mower near any open flame or where gasoline fumes may be ignited by a spark.
- At the time of manufacture, the mower conformed to the safety standards in effect for rotary mowers. To ensure best performance and continued safety certification of the mower, use genuine TORO replacement parts and accessories. Replacement parts and accessories made by other manufacturers may result in nonconformance with the safety standards, and that could be dangerous.

Safety and Instruction Decals

Safety decals and instructions are easily visible to the operator and are located near any area of potential danger. Replace any decal that is damaged or lost.



ON MOWER HOUSING (Part No. 93-0248)



ON MOWER HOUSING (Part No. 99–6018)



ON MOWER HOUSING (Part No. 43–8480)



ON CONTROL PANEL (Part No. 93–7166)

Assembly

Note: Determine the left and right hand sides of the unit by standing in the normal operator's position.

Handle

1. The mower is shipped from the factory with filler between the upper and lower handle joints to prevent shipping and assembly damage. Align the upper and lower handles and remove the filler with a pliers.
2. Remove the left knob and bolt from the outside of the handle (Fig. 2).

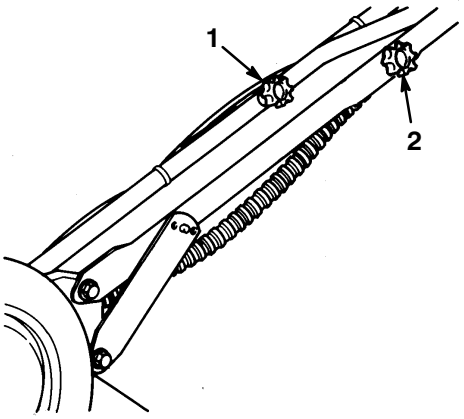

311

Figure 2

1. Right handle knob
2. Left handle knob

3. Install the knob and bolt on inside of the handle (Fig. 3).

   Both handle knobs should be positioned on the inside of the handles.
4. Tighten the handle knobs.

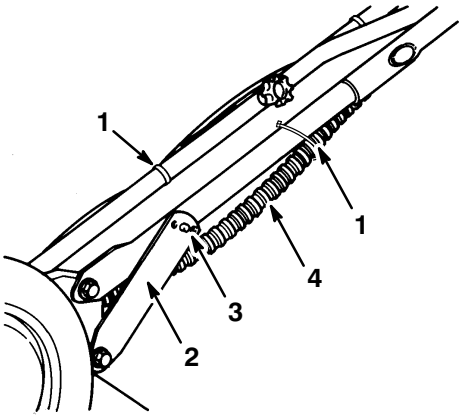

311

Figure 3

1. Cable tie
2. Handle latch
3. Handle stud
4. Control cable

5. Move the handle latches slightly outward so they will not be in the way when pivoting the handle into the operating position (Fig. 3).
6. Pivot the handle backward.
7. Move the handle latches inward so that the handle stud in the center hole of handle latch (Fig. 3).
8. If a handle latch does not fit tightly against the handle tube, remove the latch from handle stud, bend the latch inward, and reattach it to the stud.

Note: If the handle height is not satisfactory, adjust it by placing the handle stud into a different hole.

9. Ensure that the handle knobs are securely tightened.
10. Ensure that the control cables are to the rear and inside of handles. Secure cables to handle with cable ties (Fig. 3).

Installing the Starter Rope

Pull the starter rope through the rope guide on the handle (Fig. 4).

Note: To make the rope easier to loop, squeeze the control bar on the handle to release the blade brake.

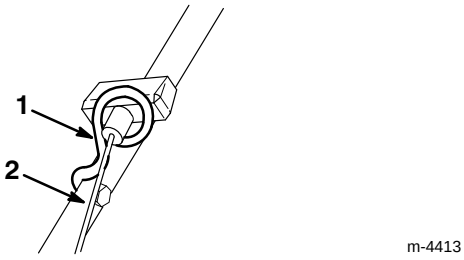

Figure 4

1. Rope guide
2. Starter rope

Before Starting

Adding/Checking the Oil

Initially, the crankcase must be filled with 20 ounces (0.55 liters) of SAE 30 oil; 10W-30 oil may be substituted if SAE 30 is not available. Use any high quality detergent oil having the American Petroleum Institute (API) “service classification”—SF, SG, SH or SJ.

Before each use, ensure that the oil level is between the FULL and ADD marks on the dipstick (Fig. 5). Add oil if the level is low.

1. Position the mower on a level surface and clean around the dipstick (Fig. 5).

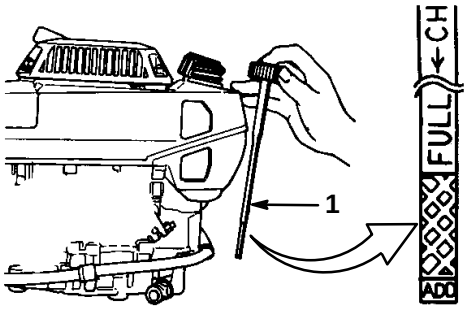

Figure 5

1. Dipstick

2. Remove the dipstick by rotating the cap counterclockwise 1/4 turn.

3. Wipe the dipstick clean.

4. Insert the dipstick into the filler neck but **do not screw it in.**

5. Remove the dipstick and check the level of the oil on the side of the dipstick with the FULL and ADD marks (Fig. 5).

6. If the level is low, add enough oil to raise the level to the FULL mark on the dipstick.

IMPORTANT: Do not fill above the FULL mark because the engine could be damaged when started. Pour the oil slowly.

Adding Gasoline

Do not use gasoline that has been stored from one season to the next. Use fresh, clean, **unleaded** regular grade gasoline. Unleaded gasoline burns cleaner, extends engine life, and promotes good starting. Leaded gasoline can be used if unleaded is not available.

Toro also recommends that Toro Stabilizer/Conditioner be used regularly during operation and storage. Toro Stabilizer/Conditioner cleans the engine during operation and prevents gum-like varnish deposits from forming during periods of storage.

DANGER

POTENTIAL HAZARD
- **In certain conditions gasoline is extremely flammable and highly explosive.**

WHAT CAN HAPPEN
- **A fire or explosion from gasoline can burn you, others, and cause property damage.**

HOW TO AVOID THE HAZARD
- **Use a funnel and fill the fuel tank outdoors, in an open area, when the engine is cold. Wipe up any gasoline that spills.**
- **Do not fill the fuel tank completely full. Add gasoline to the fuel tank until the level is 1/4” to 1/2” (6 mm to 13 mm) below the bottom of the filler neck. This empty space in the tank allows gasoline to expand.**
- **Never smoke when handling gasoline, and stay away from an open flame or where gasoline fumes may be ignited by a spark.**
- **Store gasoline in an approved container and keep it out of the reach of children.**
- **Never buy more than a 30-day supply of gasoline.**

DANGER

POTENTIAL HAZARD
- **When fueling, under certain circumstances, a static charge can develop, igniting the gasoline.**

WHAT CAN HAPPEN
- **A fire or explosion from gasoline can burn you and others and cause property damage.**

HOW TO AVOID THE HAZARD
- **Always place gasoline containers on the ground away from your vehicle before filling.**
- **Do not fill gasoline containers inside a vehicle or on a truck or trailer bed because interior carpets or plastic truck bed liners may insulate the container and slow the loss of any static charge.**
- **When practical, remove gas–powered equipment from the truck or trailer and refuel the equipment with its wheels on the ground.**
- **If this is not possible, then refuel such equipment on a truck or trailer from a portable container, rather than from a gasoline dispenser nozzle.**
- **If a gasoline dispenser nozzle must be used, keep the nozzle in contact with the rim of the fuel tank or container opening at all times until fueling is complete.**

1. Pull the wire off of the spark plug (Fig. 6).

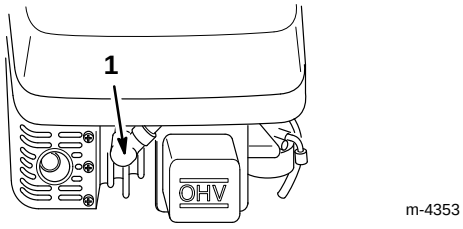

Figure 6

1. Spark plug wire

2. Clean around the fuel tank cap and remove the cap from the tank (Fig. 7).

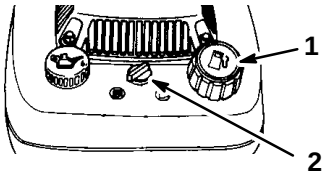

Figure 7

1. Fuel tank cap
2. Fuel valve

3. Using unleaded gasoline, fill the fuel tank to within 1/4" to 1/2" (6 to 13 mm) from top of tank, not into filler neck.

IMPORTANT: Do not fill the tank more than 1/4" from the top of the tank because the gasoline must have room to expand.

4. Install the fuel tank cap and wipe up any spilled fuel.

IMPORTANT: Do not mix oil with the gasoline. Never use methanol, gasoline containing methanol, gasohol containing more than 10% ethanol, or white gas because the fuel system could be damaged.

Do not use fuel additives other than those manufactured for fuel stabilization during storage, such as Toro Stabilizer/Conditioner. Toro Stabilizer/Conditioner is a petroleum distillate based product. Toro does not recommend stabilizers with an alcohol base such as ethanol, methanol, or isopropyl. Do not use additives to enhance the power or performance of the engine.

5. Connect the spark plug wire (Fig. 6).

Operation

Controls

Refer to Figure 8 for the locations of the mower controls.

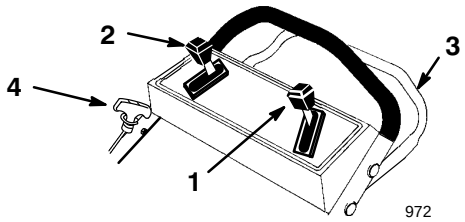

Figure 8

1. Throttle control
2. Ground speed control
3. Control bar
4. Recoil starter

Starting the Engine

Note: The engine requires a warm-up period of one minute to several minutes, depending on the temperature.

1. Push the spark plug wire onto the spark plug (Fig. 6).

2. Open the fuel valve (Fig. 7).

3. Move the throttle control to the ⚿ (CHOKE) position and the ground speed control to N (neutral).

4. Squeeze the blade control bar against the handle.

5. Pull the recoil starter out until all slack in rope is taken up, then pull vigorously to start the engine.

6. Regulate the throttle as desired between (FAST) and (SLOW).

Stopping the Engine

1. Release the control bar.

   The engine, blade, and traction drive will stop. See your dealer immediately if they do not.

2. Stay behind the handle until all moving parts stop.

3. Pull the wire off of the spark plug and close the fuel valve (Fig. 7) if the mower will be unattended or not used.

Operating the Self-propel Drive

The mower has three ground speeds: number 1 is slow, 2 is medium, and 3 is a fast walking pace.

1. Move control bar to the RUN/SHIFT position (Fig. 9).

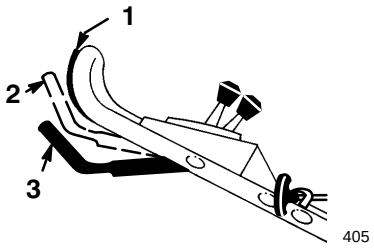

Figure 9

1. RUN/DRIVE position
2. RUN/SHIFT position
3. STOP position

2. Move ground speed control to desired setting.

3. To engage the self-propel drive, squeeze the control bar against the handle in the RUN/DRIVE position (Fig. 9).

Note: Do not shift speeds while the control bar is squeezed against handle in the RUN/DRIVE position (Fig. 9); the transmission could be damaged. Move the control bar to the RUN/SHIFT position when changing ground speed.

Ground speed can be varied by increasing or decreasing the distance between the control bar and handle. Lower the control bar to slow down when making a turn or if the mower is moving too fast for you. If you lower the control bar too far, the mower will stop self-propelling. When the control bar is tight against the handle, the mower will self-propel at the maximum ground speed set by the ground speed control.

Move the ground speed control to N (NEUTRAL) when using the mower for trimming and whenever leaving mower.

Pulling the Mower Rearward

Your mower is equipped with free-wheeling clutches which make it easier to pull the mower rearward. The control bar must be lowered enough to disengage the self-propel drive and disengage the clutches before pulling the mower rearward. The mower may need to be pushed forward one inch or more after control bar has been released to disengage the self-propel drive and the clutches.

The self-propel cable should be properly adjusted so that you can lower the control bar comfortably to stop the traction drive, without stopping the engine. Refer to Adjusting the Self-propelled Cable section in the Maintenance chapter for cable adjustment information.

Adjusting the Cutting Height

The height of cut can be adjusted to five settings (Fig. 10). For normal cutting, set all four wheels in the same position.

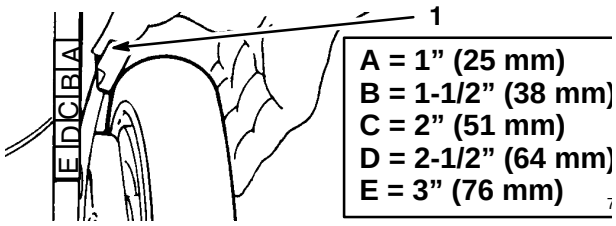

Figure 10

1. Height-of-cut lever

1. Stop the engine and wait for all moving parts to stop.

2. Pull the wire off of the spark plug (Fig. 6).

DANGER

POTENTIAL HAZARD
- **Adjusting height-of-cut levers could bring hands into contact with the moving blade.**

WHAT CAN HAPPEN
- **Contact with the rotating blade can cause serious injury.**

HOW TO AVOID THE HAZARD
- **Stop the engine and wait for all moving parts to stop before changing the height-of-cut.**
- **Do not put your fingers under the housing to lift the mower when adjusting the height-of-cut levers.**

3. For easier adjustment, lift the housing up so the wheel is off the ground. **Do not place your hands under the deck when lifting the housing.**

4. Squeeze the adjusting lever toward the wheel and move it to the desired setting (Fig. 10). Ensure that the pin on adjusting lever engages the hole in the bracket.

Note: The front wheels can be adjusted to 1/2 inch. Move adjusting lever past A and release the pin into the slot in the housing. It is not recommended that the 1/2 inch height-of-cut setting be used on a regular basis.

Cutting Tips

- Review the safety instructions and read this manual carefully before operating the mower.
- Clear the area of sticks, stones, wire, branches, and other debris which could be picked up or hit by the blade and become thrown objects.
- Keep everyone, especially children and pets, away from the area of operation.
- Avoid striking trees, walls, curbs, or other solid objects. Never deliberately mow over any object.
- If an object is struck, or the mower starts to vibrate, immediately stop the engine, disconnect the spark plug wire, and examine the mower for damage.
- Maintain a **sharp blade** throughout the cutting season. Periodically file down nicks on the blade.
- Replace the blade when necessary with an original Toro replacement blade.
- Only mow dry grass or leaves. Wet grass and leaves tend to clump on the yard and may cause the mower to plug or the engine to stall. They may also be slippery to walk on and could cause you to slip and fall.

WARNING

POTENTIAL HAZARD
- **Wet grass or leaves can cause you to slip and contact the blade.**

WHAT CAN HAPPEN
- **Blade contact can seriously injure you.**

HOW TO AVOID THE HAZARD
- **Mow only in dry conditions.**

- Clean clippings or leaves from the underside of the mower deck after each mowing.
- Keep the engine in good running condition.
- Clean the air filter frequently. Mulching stirs up more clippings and dust which clogs the air filter and reduces engine performance.

Cutting Grass

- In the heat of summer, cut the grass at the 2, 2.5, or 3 inch height-of-cut settings. Only about 1/3 of the grass blade should be cut off. Cut below the 2 inch setting only if the grass is sparse or it is autumn when the grass grows slowly.
- When cutting grass over six inches tall, mow using the highest height-of-cut setting and a slower walking speed; then mow again at a lower setting for best lawn appearance. If the grass is too long, the mower may plug and cause the engine to stall.
- Alternate the mowing direction. This helps disperse clippings over the lawn for even fertilization.

If the finished lawn appearance is unsatisfactory, try one or more of the following:

- Sharpen the blade.
- Walk at a slower pace while mowing.
- Raise the height-of-cut setting on your mower.
- Cut grass more frequently.
- Overlap cutting swaths instead of cutting a full swath with each pass.
- Set the height-of-cut on the front wheels one notch lower than the rear wheels. (example: set the front wheels at the 2 inch setting and the rear wheels at the 2.5 inch setting)

Cutting Leaves

- When cutting is complete, ensure that 50% of the grass blades show through the cut leaf cover. This may require one or more passes over the leaves.
- Position all wheels at the same height-of-cut setting.
- Walk at a slower mowing speed if the leaves are not being cut up finely enough to be hidden in the grass.
- If you cut up a lot of oak leaves, add lime to your grass in the spring. Lime reduces the acidity of the leaves.

Maintenance

Recommended Maintenance Schedule

Service Item	Service Operation	After every use	8 Hours	25 Hours	50 Hours	100 Hours
Housing	Clean built-up grass clippings and dirt.	X				
Fasteners	Check blade and engine mounting fasteners frequently. Keep all nuts, bolts and screws tight to ensure that the mower is in safe working condition.		X			
Lubrication	Grease rear grease fittings.			X		
Engine Oil	Drain and refill engine crankcase with fresh oil after first **8** hours of operation. Thereafter, change every **50** hours.		Initial		X	
Blade	Sharpen or replace; maintain more frequently if edge is dulled quickly in rough or sandy conditions.				X	
Blade Brake	Check stopping time every 50 hours or at start of each mowing season. Blade must stop within three seconds of releasing bail; if not see your Authorized Toro Service Dealer for repair.				X	
Fuel System	Check the fuel hose for leaks or damage. Replace if necessary. Clean the fuel filter.				X	
Spark Plug	Inspect every 100 hours and replace if necessary.					X
Air Filters	Clean after the first 25 operating hours and then every 100 operating hours. **Clean more frequently if operating conditions are dusty.** Replace each mowing season or every 300 hours.			Initial		X
Cooling System	Clean grass, clippings, debris or dirt that may clog engine air cooling fins and starter. Clean more frequently if operated under dirty or high chaff conditions.					X

CAUTION

POTENTIAL HAZARD
- **If you leave the wire on the spark plug, someone could start the engine.**

WHAT CAN HAPPEN
- **Accidental starting of the engine could seriously injure you or other bystanders.**

HOW TO AVOID THE HAZARD
- **Pull the wire off of the spark plug before you do any maintenance. Also push the wire aside so that it does not accidentally contact the spark plug.**

Cleaning the Air Filter

Clean the air filter after the first 25 hours of operation and then every 100 hours of operation thereafter. Replace the paper air filter once every season or every 300 hours of operation; replace it more frequently under dusty conditions.

IMPORTANT: Do not operate the engine without the air filter assembly; extreme engine damage will occur.

1. Stop the engine and pull the wire off of the spark plug (Fig. 6).
2. Remove the bolt securing the air cleaner cover (Fig. 11).
3. Remove the cover and clean it thoroughly (Fig. 11).

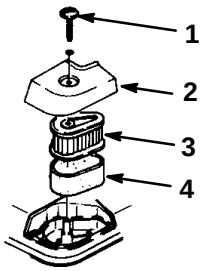

Figure 11

1. Bolt
2. Cover
3. Paper air filter
4. Foam pre-cleaner

4. Remove the foam pre–cleaner and wash it with a mild detergent and water, then blot it dry (Fig. 11).
5. Saturate the pre-cleaner with oil, then squeeze it (do not twist) to remove excess oil.
6. Remove the paper air filter and discard it (Fig. 11).

IMPORTANT: Do not try to clean a paper filter.

7. Install the foam pre-cleaner on the new paper air filter.
8. Install the air cleaner assembly.
9. Install the cover and secure it with the bolt.

Draining Gasoline and Cleaning the Fuel Filter

Clean the fuel filter element every 50 hours of operation.

1. Stop the engine and wait for it to cool.

IMPORTANT: Drain gasoline from a cold engine only.

2. Pull the wire off of the spark plug (Fig. 6).
3. Close the fuel valve (Fig. 7).
4. Remove the fuel tube by loosening the tube clamp at the carburetor (Fig. 12).

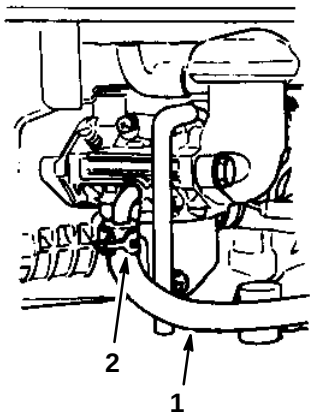

Figure 12

1. Fuel tube
2. Tube clamp

5. Open the fuel valve by turning the lever to the open position (Fig. 7).
6. Drain gasoline completely from the tank and fuel line into an approved gasoline container.
7. Remove the fuel tube on the fuel tank by loosening the tube clamp (Fig. 13).
8. Remove the fuel filter from the fuel tank (Fig. 12).

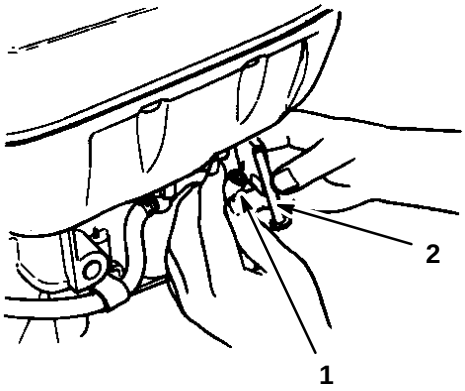

Figure 13

1. Fuel tube
2. Fuel filter

9. Clean the fuel filter with high flash-point solvent.
10. Firmly install the filter, tubes and clamps.

Changing the Oil

Change the engine oil after the first **8** hours of operation and after 5**0** hours of operation or yearly thereafter.

1. Run the engine to warm the oil.

WARNING

POTENTIAL HAZARD
- **Oil may be hot after the engine has been running.**

WHAT CAN HAPPEN
- **Contact with hot oil can cause severe personal injury.**

HOW TO AVOID THE HAZARD
- **Avoid contact with oil while draining oil.**

2. Stop the engine and pull the wire off of the spark plug (Fig. 6).

3. Place a suitable drain pan under the side oil drain plug.

4. Raise the left side of the mower at least 12 inches and open the side oil drain plug (Fig. 14).

5. Insert the oil drain tube over the drain plug and lower the mower (Fig. 14).

6. Raise the right side of the mower until all oil has flowed into the drain pan.

7. Remove the oil drain tube and install the side oil drain plug.

IMPORTANT: Torque the side oil drain plug to 23 N-m (190 in-lbs.).

8. Recycle the oil as per local codes.

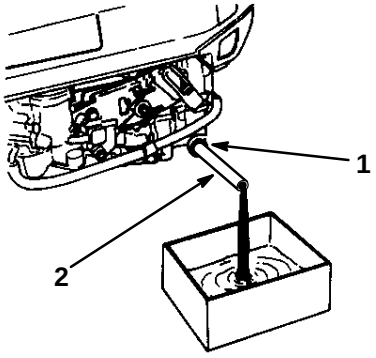

m-4354

Figure 14

1. Side oil drain plug
2. Oil drain tube

9. Fill the crankcase to the FULL line on the dipstick with fresh oil. Refer to the Checking/Adding Oil section, page 6, for specifications.

10. Wipe up any spilled oil.

Spark Plug

Use an NGK BPR5ES spark plug or equivalent. The correct air gap is 0.030" (0.76 mm). Remove the plug after every 100 operating hours and check its condition.

1. Stop the engine and pull the wire off the spark plug (Fig. 6).

2. Clean around the spark plug and remove it from the cylinder head.

IMPORTANT: Replace a cracked, fouled, or dirty spark plug. Do not clean the electrodes because engine damage could result from grit entering the cylinder.

3. Set the gap on the new plug to 0.030" (0.76 mm) (Fig. 15).

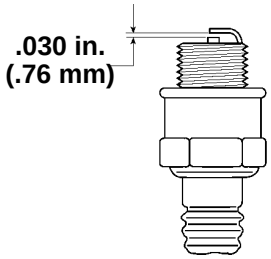

986

Figure 15

4. Install the spark plug and gasket seal. Tighten the plug to 17 ft-lb (23 N·m).

5. Connect the spark plug wire (Fig. 6).

Adjusting the Self-propel Cable

If the mower does not self-propel or has a tendency to creep forward when the traction is not engaged, adjust the wheel drive control knob on the rear of the gear box (Fig. 16).

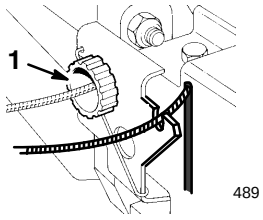

489

Figure 16

1. Knob

1. If the mower does not self-propel, rotate the control knob clockwise 1/2 turn.

2. If the mower creeps forward, rotate knob 1/2 turn counterclockwise.

Adjustment is correct when:

- The mower does not creep forward when traction is disengaged.
- The control bar is at a comfortable operating distance from the handle for operator's hand when disengaging and engaging the self-propel drive.

Note: Do not over adjust the cable. The cable should be just tight enough to make wheels turn when control bar is at a distance from the handle that is comfortable for operator's hand. Over adjusting may require excessive operator effort to engage or disengage the self-propel drive.

Maintaining the Blade

A straight, sharp blade provides maximum cutting performance. Regularly inspect and sharpen the blade.

WARNING

POTENTIAL HAZARD
- **The blade is sharp.**

WHAT CAN HAPPEN
- **Contact with a sharp blade can cause serious personal injury.**

HOW TO AVOID THE HAZARD
- **Wear gloves or wrap the sharp edges of the blade with a rag.**

1. Stop the engine and pull the wire off of the spark plug (Fig. 6).

WARNING

POTENTIAL HAZARD
- **Gasoline is extremely flammable, highly explosive and under certain conditions can cause personal injury or property damage.**

WHAT CAN HAPPEN
- **Tipping the mower may cause fuel leakage from the carburetor or fuel tank.**

HOW TO AVOID THE HAZARD
- **Avoid fuel spills by running the engine dry or removing gas with a hand pump; never siphon.**

2. Drain the gasoline from the fuel tank. Refer to the Draining Gasoline and Changing the Fuel Filter section, page 11.
3. Tip the mower on its left side (Fig. 17). Avoid rotating the blade because starting problems may result.

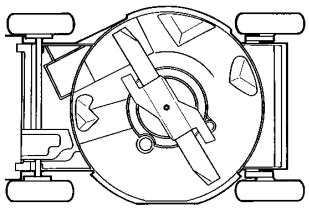

757

Figure 17

Inspecting the Blade

1. Examine the blade for sharpness and wear, especially where flat and curved parts meet (Fig. 18A).
2. Complete one of the following:
   A. If a slot or wear is noticed, (Fig. 18B & C), replace the blade. Refer to the Removing and Installing the Blade sections.
   B. If the blade is nicked or dull, sharpen it. Refer to the Removing, Sharpening, Balancing, and Installing the Blade sections.
   C. If there are no signs of wear or dullness, return the mower to the upright position and replace the spark plug wire (Fig. 6).

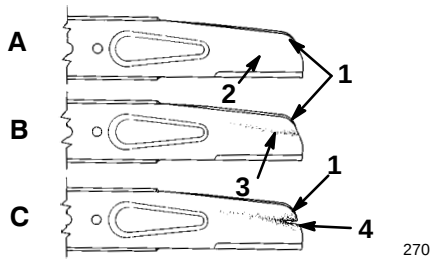

270

Figure 18

1. Sail
2. Flat part of blade
3. Wear
4. Slot formed

DANGER

POTENTIAL HAZARD
- **A worn or damaged blade could break and a piece of the blade could be thrown into operator's or bystander's area.**

WHAT CAN HAPPEN
- **A thrown piece of the blade could cause serious personal injury or death to the operator or bystanders.**

HOW TO AVOID THE HAZARD
- **Inspect the blade periodically for wear or damage.**
- **Replace a worn or damaged blade.**

Removing the Blade

1. Grasp the end of the blade using a rag or thickly padded glove.
2. Remove the blade bolt, lockwasher, blade accelerator, and blade (Fig. 19).

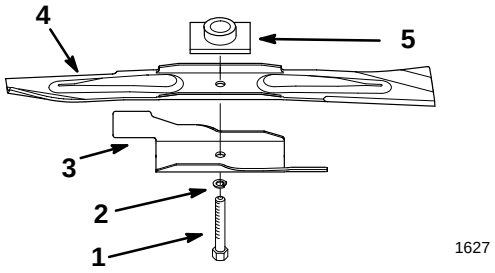

Figure 19

1. Blade bolt
2. Lock washer
3. Accelerator
4. Blade
5. Blade driver

Sharpening the Blade

Using a file, sharpen top side of the blade and maintain the original cutting angle (Fig. 20).



Figure 20

1. Sharpen at this angle only

Note: The blade will remain balanced if same amount of material is removed from both cutting edges.

Balancing the Blade

1. Check the balance of the blade by placing the center hole of the blade over a nail or screwdriver shank clamped horizontally in a vise (Fig. 21).

Note: You can also check the balance using a commercially manufactured, blade balancer.

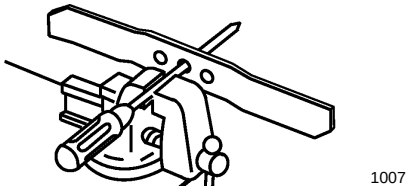

Figure 21

2. If either end of the blade rotates downward, file that end (not the cutting edge or the end near the cutting edge). The blade is properly balanced when neither end drops.

Installing the Blade

1. Position the blade onto the spindle and blade driver, with the curved blade tips pointing toward the mower and the blade driver nesting in the recess of the blade (Fig. 19).
2. Install the accelerator, lock washer, and blade bolt (Fig. 19).
3. Tighten the blade bolt to 50 ft-lb (68 N·m).

WARNING

POTENTIAL HAZARD
- **Operating the mower without the accelerator in place could cause the blade to flex, bend, or break.**

WHAT CAN HAPPEN
- **A broken blade could cause serious injury or death to the operator or bystanders.**

HOW TO AVOID THE HAZARD
- **Do not operate the mower without the accelerator.**

Lubricating the Self–propel Drive

1. Wipe the grease fittings on the rear height-of-cut adjustors (Fig. 22) with a clean rag.

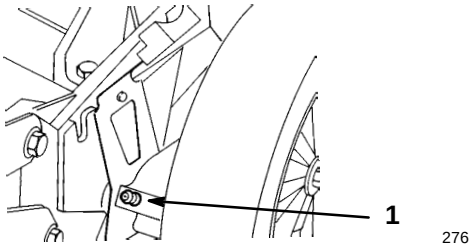

Figure 22

1. Grease fitting

2. Install a grease gun onto each fitting in turn and gently apply one or two pumps of #2 multi-purpose lithium grease to each.

IMPORTANT: Excess grease may damage seals and prevent proper wheel clutch operation.

Cleaning the Underside of the Mower Housing

To ensure best performance, keep the underside of the mower housing clean. Be especially careful to keep the kickers free of debris (Fig. 23).

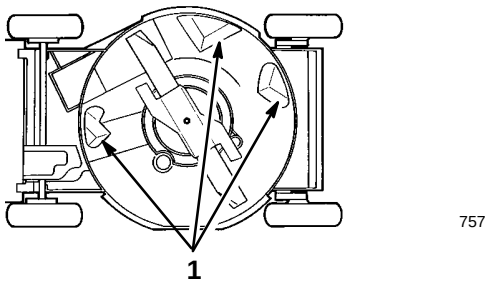

Figure 23

1. Kickers

Washing Method

1. Position the mower on a flat, concrete or asphalt surface near a garden hose.

2. Start the engine.

3. Hold the running garden hose at handle level and direct the water to flow on the ground just in front of the right rear tire (Fig. 24).

The blade will draw in water and wash out clippings. Let the water run until you no longer see clippings being washed out from under housing.

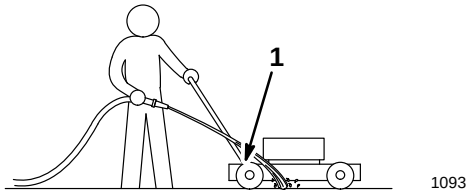

Figure 24

1. Rear right wheel

4. Stop the engine.

5. Turn off the garden hose.

6. Start the mower and let it run for a few minutes to dry out the moisture on the mower and its components.

7. While the engine is running, engage and disengage the traction drive several times to dry it out.

Scraping Method

If washing does not remove all debris from under the mower, tip it and scrape it clean.

1. Pull the wire off of the spark plug (Fig. 6).

2. Drain the gasoline from the fuel tank. Refer to the Draining Gasoline and Changing the Fuel Filter section, page 11.

WARNING

POTENTIAL HAZARD
- **Gasoline is extremely flammable, highly explosive and under certain conditions can cause personal injury or property damage.**

WHAT CAN HAPPEN
- **Tipping the mower may cause fuel leakage from the carburetor or fuel tank.**

HOW TO AVOID THE HAZARD
- **Avoid fuel spills by running the engine dry or removing gas with a hand pump; never siphon.**

3. Tip the mower on its left side (Fig. 23).

4. Remove dirt and grass clippings with a hardwood scraper. Avoid burrs and sharp edges.

IMPORTANT: Move the blade as little as possible to avoid future starting problems.

5. Turn the mower upright.

6. Refill the gas tank.

7. Connect the spark plug wire (Fig. 6).

Cleaning Under the Belt Cover

Keep the area under belt cover free of debris.

1. With the engine turned off, remove the two bolts securing the belt cover (Fig. 25) to the mower housing.

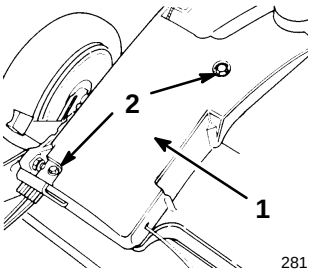

Figure 25

1. Belt cover
2. Bolt

2. Lift off the cover and brush out all debris from the belt area.
3. Install the belt cover.

Storage

To prepare the lawn mower for off-season storage, perform the recommended maintenance procedures. Refer to the Maintenance section, page 10.

Store the mower in a cool, clean, dry place. Cover the mower to keep it clean and protected.

Fuel

WARNING

POTENTIAL HAZARD
- **Gasoline can vaporize if stored over long periods of time.**

WHAT CAN HAPPEN
- **Vaporized fuel can explode if it comes into contact with open flame.**

HOW TO AVOID THE HAZARD
- **Do not store gasoline (fuel) over long periods of time.**
- **Do not store mower with fuel in the tank in an enclosure with an open flame. (Example: a furnace or water heater pilot light.)**
- **Allow the engine to cool before storing in any enclosure.**

We recommend Toro Fuel Conditioner to stabilize fuel for storage. If possible, the last fuel fill of the year should be treated with Toro Fuel Conditioner.

Run the fuel tank empty when mowing the last time prior to storage. The smaller the amount of fuel in the tank, the shorter the time required to run the fuel system dry. Run the mower until engine stops from lack of fuel, then prime it and restart again allowing it to run until it stops. When you can no longer start the engine, it is sufficiently dry.

Preparing the Engine

1. While the engine is still warm, drain oil from crankcase. Refer to the Changing Engine Oil section, page 11.
2. Remove the spark plug (Fig. 6).
3. Using an oil can, squirt about one tablespoon of oil through spark plug hole.
4. Slowly rotate the engine several times, using the starter rope, to distribute the oil.
5. Install the spark plug but **do not** connect the spark plug wire.

General

1. Clean the mower housing. Refer to the Cleaning the Underside of the Mower Housing section, page 15.
2. Clean any dirt and chaff from the cylinder, cylinder head fins, and blower housing. Also remove grass clippings, dirt, and grime from external parts of the engine, shrouding, and top of the mower housing.
3. Check the condition of the blade. Refer to the Maintaining the Blade section, page 13.
4. Tighten all nuts, bolts, and screws.
5. Lubricate the wheels. Refer to the Lubricating the Self–Propel Drive section, page 14.
6. Touch up all rusted or chipped paint surfaces. Paint is available from an Authorized Toro Service Dealer.

Removing From Storage

1. Check and tighten all fasteners.
2. Remove spark plug and spin engine rapidly using starter to blow excess oil from the cylinder. Clean spark plug or replace if cracked, broken or electrodes are worn.
3. Install spark plug and torque to 14 ft.–lbs. (19 N·m).
4. Perform recommended maintenance procedures. See Maintenance section.
5. Fill the crankcase with oil and check the oil level. Refer to the Changing Engine Oil section, page 11.
6. Fill the fuel tank with fresh, clean gasoline.

7. Connect the spark plug wire.

Accessories

For special conditions, the following accessories may be purchased at your local Authorized Toro Service Dealer.

1. **Rear Bag Kit**—Install discharge tunnel and rear mounting grass bag to convert Recycler® mower to a rear bagging mower.
2. **Side Discharge Kit**—Rear mounted in place of the grass bag. Disperses clippings while trimming on both sides (Fig. 26).

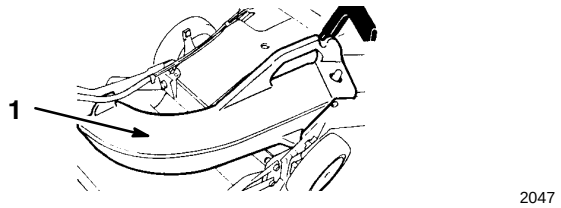

Figure 26

1. Side discharge chute

3. **Dethatcher Kit**—Front mounted for easy maneuverability (Fig. 27). Spring tines loosen thatch for clean vacuuming into grass bag and convenient disposal.

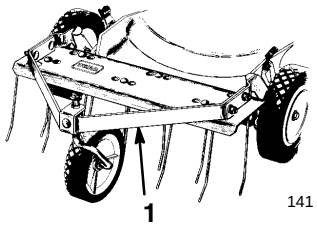

Figure 27

1. Dethatcher attachment

The Toro Starting Guarantee

A Full 10 Year Warranty on Toro Mower Model 20044 Engines

What Is Covered?

The Toro Company guarantees that your Toro Engine will start on the first or second pull for ten years from the date of purchase—if you provide the routine maintenance it requires—or we will fix it free of charge. The cost of parts and labor are included, but you must pay transportation costs.

What Must You Do To Keep The Warranty In Effect?

You must maintain your Toro Engine by following the maintenance schedule detailed in the operator's manual, at your expense. You must record this work in the maintenance chart provided in your owner's manual and keep your proof of purchase of mower and all maintenance service parts.

How Do You Get Service?

If the starting performance of your Toro Engine should diminish to the point where it will not start in one or two pulls by a normal, able–bodied adult, you should follow the procedures below:

1. Contact any Authorized Toro Service Dealer, Toro Master Service Dealer, or Toro Distributor (the Yellow Pages of your telephone directory is a good reference source). Or, call 1-800-421-9684 for the Toro 24 hour dealer locator system.

2. You will be instructed to return the product to that outlet or another Authorized Toro Service outlet which might be more convenient.

3. Bring the product, your maintenance records, and proof of purchase to the Service Dealer.

If, for any reason, you are dissatisfied with the Dealer's analysis of your engine's starting condition, or the assistance provided, please feel free to contact us:

Toro Customer Service Department
8111 Lyndale Avenue South
Bloomington, Minnesota 55420-1196

What Does This Warranty Not Cover?

This Warranty does not cover:

1. Any repairs on products used commercially.

2. Normal maintenance including replacement of spark plugs, air filter, fuel filter, and carburetor adjustments.

3. Oil change and lubrication.

4. Repairs or adjustments due to:

- A. Failure to follow proper maintenance procedures;
- B. Rotary mower blade striking an object;
- C. Contaminants in the fuel system;
- D. Improper fuel or fuel mixture (consult your owner's manual if in doubt);
- E. Failure to drain the fuel system prior to any period of non–use over three months;
- F. Operation misuse, neglect or accidents;
- G. Repairs or attempted repairs by anyone other than an Authorized Toro Service Dealer.

5. Special operational conditions where starting may require more than two pulls, including:

- A. First time starts after extended period of non–use or seasonal storage;
- B. Cool temperature starts such as those found in early spring and late autumn may require an additional pull or two;
- C. Improper starting procedures. If you are having difficulty starting your unit, please check the operator's manual to ensure you are using the correct starting procedures. This can save an unnecessary visit to a Service Dealer.

All warranty repairs reimbursable under this warranty must be performed by an Authorized Toro Service Dealer using Toro approved replacement parts.

The above remedy through repair by an Authorized Toro Service Dealer is the purchaser's sole remedy.

Rev. 2/17/1999

How Does State Law Relate To This Warranty?

There is no other express warranty except for The Toro Performance Warranty and special emission system coverage on some products.

The Toro Company is not liable for indirect, incidental or consequential damages in connection with the use of the Toro Products covered by this warranty, including any cost or expense of providing substitute equipment or service during reasonable periods of malfunction or non–use pending completion of repairs under this warranty. Some states do not allow exclusions of incidental or consequential damages, so the above exclusion may not apply to you.

This warranty gives you specific legal rights, and you may also have other rights which vary from state to state.

This warranty gives you specific legal rights, and you may also have other rights which vary from state to state.

Guaranteed to Start Maintenance Record

To keep the starting guarantee in effect, you must perform the maintenance procedures outlined in this Operator's Manual at the intervals specified in the Maintenance section. Record all maintenance activities on this chart.

10 Year GTS Maintenance Log

Date Serviced	Hours Used	Change Oil after first 8 hours	Change Oil every 50 hours	Check Air Filter every 25 hours	Clean or replace Air Filter every 100 hours	Lube Wheels every 25 hours or season	Replace Spark Plug every 100 hours	Sharpen & Balance Blade every 25 hours or season	Drain Gas and run to dry stop at end of season

Gas, Cordless, Electric, and 21" Commercial Duty Walk Mowers

THE TORO PERFORMANCE WARRANTY

A Full Warranty
(Limited Warranty for Commercial Use)

What Is Covered By This Express Warranty?

From the date of purchase, for the periods listed below, the Toro Company promises to repair any Toro Product used for normal residential purposes* if defective in materials or workmanship or if it stops functioning due to the failure of a component.

- Super Recycler® Walk Mowers . 5 year full warranty
- VacuPower™ Walk Mowers . . . . 5 year full warranty
- All Others . . . . . 2 year full warranty

The cost of parts and labor is included, but the customer pays the transportation costs.

What Products Are Covered By This Warranty?

This warranty applies to all gas, cordless, and electric consumer walk power mowers.

How About Commercial Use?

Toro Walk Power Mowers used for commercial, institutional or rental use are warranted against defects in material or workmanship. Components failing due to normal wear are not covered by this warranty. The following time periods apply from the date of purchase:

Products	Warranty Period	
	Engine	Entire Unit
• 21" Commercial Duty Walk Mowers	2 year limited	1 year limited
• All Others	45 day limited	45 day limited

How Do You Get Warranty Service?

Should you feel your Toro Product requires warranty service, contact the dealer who sold you the product or any Authorized Toro Service Dealer or Toro Master Service Dealer. The Yellow Pages of your telephone directory is a good reference source. The dealer will either arrange service at his/her dealership or recommend another Authorized Service Dealer who may be more convenient. You may need proof of purchase (copy of registration card, sales receipt, etc.) for warranty validation.

If for any reason you are dissatisfied with the Service Dealer's analysis of the defect in materials or workmanship or if you need a referral to a Toro Service Dealer, please feel free to contact us at the following address:

Toro Customer Service Department
8111 Lyndale Avenue South
Bloomington, MN 55420−1196
612−888−8801
800−348−2424

What Must You Do To Keep The Warranty In Effect?

You must maintain your Toro Product by following the maintenance procedures described in the operator's manual. Such routine maintenance, whether performed by a dealer or by you, is at your expense.

What Does This Warranty Not Cover? and How Does Your State Law Relate To This Warranty?

There is no other express warranty except for special emission system coverage on some products and the Toro Starting Guarantee on GTS Engines. This express warranty does not cover:

- Cost of regular maintenance service or parts, such as filters, fuel, lubricants, oil changes, spark plugs, blade sharpening, blade worn out, cable/linkage adjustments or brake and clutch adjustments.

- Any product or part which has been altered or misused or required replacement or repair due to accidents or lack of proper maintenance.

- Repairs necessary due to improper fuel, contaminants in the fuel system, or failure to properly prepare the fuel system prior to any period of non−use over three months.

- Repairs necessary due to improper battery care, electrical supply irregularities, or failure to properly prepare the mower prior to any period of non−use.

- Pickup and delivery charges.

All repairs covered by this warranty must be performed by an Authorized Toro Service Dealer using Toro approved replacement parts.

Repair by an Authorized Toro Service Dealer is your sole remedy under this warranty.

The Toro Company is not liable for indirect, incidental or consequential damages in connection with the use of the Toro Products covered by this warranty, including any cost or expense of providing substitute equipment or service during reasonable periods of malfunction or non−use pending completion of repairs under this warranty. Some states do not allow exclusions of incidental or consequential damages, so the above exclusion may not apply to you.

This warranty gives you specific legal rights, and you may also have other rights which vary from state to state.

* Normal residential purposes means mowing the lawn on the same lot as your home. Use at more than one location is considered commercial use and the commercial use warranty would apply.

COUNTRIES OTHER THAN THE UNITED STATES OR CANADA

Customers who have purchased Toro products exported from the United States or Canada should contact their Toro Distributor (Dealer) to obtain guarantee policies for your country, province, or state. If for any reason you are dissatisfied with your Distributor's service or have difficulty obtaining guarantee information, contact the Toro importer. If all other remedies fail, you may contact us at The Toro Company.

Rev. 10/21/1998