FORM NO. 3322–527

TORO®

MODEL NO. 03540 – 90400 & UP
MODEL NO. 03541 – 90400 & UP
MODEL NO. 03543 – 90400 & UP
MODEL NO. 03544 – 90400 & UP

OPERATOR'S MANUAL

REELMASTER® 5200–D / 5400–D

2 & 4 WHEEL DRIVE TRACTION UNITS

To understand this product, and for safety and optimum performance, read this manual before starting the engine. Pay special attention to SAFETY INSTRUCTIONS highlighted by this symbol.



It means CAUTION, WARNING or DANGER – personal safety instruction. Failure to comply with the instruction may result in personal injury.

TORO
THIS UNIT CONFORMS TO ANSI B71.4–1990

The REELMASTER 5200–D / 5400–D conforms to the B71.4-1990 specifications of the American National Standards Institute's safety standards for riding mowers when weight and ballast is installed according to chart on page 13; thus, TORO proudly displays the ANSI safety seal.



© The TORO COMPANY – 1998

FOREWORD

This operator's manual has instructions on safety, proper set−up and operation, adjustments and maintenance. Therefore, anyone involved with the product, including the operator, should read and understand this manual. Major sections are:

- Safety Instructions
- Specifications
- Set−up Instructions
- Before Operating
- Know Your Controls
- Operating Instructions
- Maintenance
- Schematics

This manual emphasizes safety, mechanical and general product information. **DANGER**, **WARNING** and **CAUTION** identify safety messages. Whenever the triangular safety alert symbol appears, understand the safety message that follows. For complete safety instructions, read pages 4− 7. **IMPORTANT** highlights special mechanical information and **NOTE** emphasizes general product information worthy of special attention.

⚠ WARNING: ⚠

Diesel engine exhaust and some of its constituents are known to the State of California to cause cancer, birth defects, or other reproductive harm.

SERVICE AND REPAIR LITERATURE

The Reelmaster 5200/5400 Service Manual contains information for troubleshooting, testing and repair of the hydraulic system, brakes and cutting units for the Reelmaster 5200/5400.To order this publication, contact your local authorized Toro Distributor.

OPTIONAL SPARK ARRESTER

In some places a spark arrester muffler must be used because of local, state or federal regulations. The spark arrester available from your local Toro Distributor is approved by the United States Department of Agriculture and the United States Forest Service.

When the mower is used or operated on any California forest, brush or grass covered land, a properly operating spark arrester must be attached to the muffler. The operator is violating state law, Section 442 Public Resources Code if a spark arrester is not used.

Whenever you have questions or need service, contact your local authorized Toro Distributor. In addition to having a complete line of accessories and professional turf care service technicians, the distributor has a complete line of genuine TORO replacement parts to keep your machine operating properly. Keep your TORO all TORO. Buy genuine TORO parts and accessories.

TABLE OF CONTENTS

	Page
SAFETY INSTRUCTIONS	4
SAFETY INSTRUCTIONS & DECALS	6
SPECIFICATIONS	8
LOOSE PARTS CHART	9
SET-UP INSTRUCTIONS	10
Connect Battery	10
Mount Hood Latch	10
Replace Floor Panel Fastener	11
Check Tire Pressure	11
Install Cutting Units	11
Install Rear Weight	13
BEFORE OPERATING	14
Check Engine Oil	14
Check Cooling System	14
Fill Fuel Tank	14
Check Transmission Fluid	15
Check Hydraulic Fluid	15
Check Rear Axle Lubricant (Models 03541 or 03544 only)	16
Check Reel To Bedknife Contact	16
Check Torque Of Wheel Nuts	16
KNOW YOUR CONTROLS	17
OPERATING INSTRUCTIONS	19
Starting And Stopping	19
Bleeding Fuel System	19
Setting Reel Speed	20
Adjusting Lift Arm Down Pressure	20
Towing Traction Unit	21
Diagnostic Light	21
Diagnostic ACE Display	22
Checking Interlock Switches	22
Hydraulic Valve Solenoid Functions	23
Operating Characteristics	23
Logic Grid	25
LUBRICATION	26
Greasing Bearings And Bushings	26
SERVICE INTERVAL CHART	27
DAILY MAINTENANCE CHART & CHECKLIST	28

	Page
AIR CLEANER MAINTENANCE	29
General Air Cleaner Maintenance	29
Servicing Precleaner Bowl	29
Servicing Air Cleaner Filter	29
ENGINE MAINTENANCE	30
Engine Oil And Filter	30
Fuel System	30
Replacing Fuel Filter	30
Bleeding Air From Injectors	31
Engine Cooling System	31
Servicing Engine Belts	31
Adjusting Throttle	32
HYDRAULIC MAINTENANCE	33
Changing Hydraulic Fluid	33
Replacing Hydraulic Filter	33
Checking Hydraulic Lines And Hoses	33
Hydraulic System Test Ports	33
Adjusting Traction Drive For Neutral	34
Adjusting Cutting Unit Lift Rate	34
Checking and Adjusting Traction Linkage	35
BRAKE MAINTENANCE	36
Adjusting Service Brakes	36
AXLE MAINTENANCE	36
Changing Transmission Fluid	37
Replacing Transmission Filter	37
Changing Rear Axle Lubricant (Models 03541 or 03544 only)	37
Rear Wheel Toe−in	37
ELECTRICAL MAINTENANCE	38
Battery Care	38
Fuses	38
Optional Lighting	38
CUTTING UNIT MAINTENANCE	39
Backlapping	39
ELECTRICAL SCHEMATIC	40
HYDRAULIC SCHEMATIC	41
MAINTENANCE SCHEDULE	42
PREPARATION FOR SEASONAL STORAGE	43
IDENTIFICATION & ORDERING	43
Model And Serial Number	43
WARRANTY	Back Cover

SAFETY INSTRUCTIONS

The REELMASTER 5200-D/5400−D was tested and certified by TORO for compliance with the B71.4-1990 specifications of the American National Standards Institute. Although hazard control and accident prevention partially are dependent upon the design and configuration of the machine, these factors are also dependent upon the awareness, concern, and proper training of the personnel involved in the operation, transport, maintenance, and storage of the machine. Improper use or maintenance of the machine can result in injury or death. To reduce the potential for injury or death, comply with the following safety instructions.

BEFORE OPERATING

1. Read and understand the contents of this manual before starting and operating the machine. Become familiar with the controls and know how to stop the machine and engine quickly. A free replacement manual is available by sending the complete model and serial number to:

The Toro Company
8111 Lyndale Avenue South
Bloomington, Minnesota 55420−1196.

2. Never allow children to operate the machine. Do not allow adults to operate machine without proper instruction. Only trained operators who have read this manual should operate this machine.

3. Never operate the machine when under the influence of drugs or alcohol.

4. Keep all shields, safety devices and decals in place. If a shield, safety device or decal is defective, illegible or damaged, repair or replace it before operating the machine. Also tighten any loose nuts, bolts or screws to ensure machine is in safe operating condition.

5. Always wear substantial shoes. Do not operate machine while wearing sandals, tennis shoes, sneakers or when barefoot. Do not wear loose fitting clothing that could get caught in moving parts and possibly cause personal injury. Wearing safety glasses, safety shoes, long pants and a helmet is advisable and required by some local ordinances and insurance regulations.

6. Assure interlock switches are adjusted correctly so engine cannot be started unless traction pedal is in NEUTRAL and cutting units are DISENGAGED.

7. Remove all debris or other objects that might be picked up and thrown by the reels or fast moving components from other attached implements. Keep all bystanders away from operating area.

8. Since diesel fuel is highly flammable, handle it carefully:

A. Use an approved fuel container.

B. Do not remove fuel tank cap while engine is hot or running.

C. Do not smoke while handling fuel.

D. Fill fuel tank outdoors and only to within an inch of the top of the tank, not the filler neck. Do not overfill.

E. Wipe up any spilled fuel.

WHILE OPERATING

9. Sit on the seat when starting and operating the machine.

10. Before starting the engine:

A. Engage the parking brake.

B. Make sure traction pedal is in NEUTRAL and the ENABLE / DISABLE switch is in DISABLE.

C. After engine is started, release parking brake and keep foot off traction pedal. Machine must not move. If movement is evident, the neutral return mechanism is adjusted incorrectly; therefore, shut engine off and adjust until machine does not move when traction pedal is released.

11. Seating capacity is one person. Therefore, never carry passengers.

12. Do not run engine in a confined area without adequate ventilation. Exhaust fumes are hazardous and could possibly be deadly.

13. Check interlock switches daily for proper operation. If a switch fails, replace it before operating the machine. The interlock system is for your protection, so do not bypass it. Replace all interlock switches every two years.

14. Using the machine demands attention and to prevent loss of control:

A. Operate only in daylight or when there is good artificial light.

B. Drive slowly

C. Watch for holes or other hidden hazards.

D. Look behind machine before backing up.

E. Do not drive close to a sand trap, ditch, creek or other hazard.

F. Reduce speed when making sharp turns and turning on a hillside.

G. Avoid sudden stops and starts.

15. Traverse slopes carefully. Do not start or stop suddenly when traveling uphill or downhill.

16. Operator must be skilled and trained in how to drive on hillsides. Failure to use caution on slopes or hills may cause loss of control and vehicle to tip or roll possibly resulting in personal injury or death. On 4 wheel drive models, always use the seat belt and ROPS together.

17. If engine stalls or loses power and cannot make it to the top of a slope, do not turn machine around. Always back slowly straight down the slope.

SAFETY INSTRUCTIONS

18. DON'T TAKE AN INJURY RISK! When a person or pet appears unexpectedly in or near the mowing area, **STOP MOWING**. Careless operation, combined with terrain angles, ricochets, or improperly positioned guards can lead to thrown object injuries. Do not resume mowing until area is cleared.

19. Do not touch engine, muffler or exhaust pipe while engine is running or soon after it is stopped. These areas could be hot enough to cause burns.

20. If cutting unit strikes a solid object or vibrates abnormally, stop immediately, turn engine off, set parking brake and wait for all motion to stop. Inspect for damage. If reel or bedknife is damaged, repair or replace it before operating. Do not attempt to free blocked cutting unit by reversing reel direction. Damage to reel may result.

21. Before getting off the seat:

A. Move traction pedal to neutral.

B. Set parking brake.

C. Disengage cutting units and wait for reels to stop.

D. Stop engine and remove key from switch.

E. Toro recommends that anytime the machine is parked (short or long term) the cutting units should be lowered to the ground. This relieves pressure from the lift circuit and eliminates the risk of cutting units accidentally lowering to the ground.

F. Do not park on slopes unless wheels are chocked or blocked.

MAINTENANCE

22. Before servicing or making adjustments, stop engine and remove key from the switch.

23. Make sure machine is in safe operating condition by keeping all nuts, bolts and screws tight.

24. Make sure all hydraulic line connectors are tight, and all hydraulic hoses and lines are in good condition before applying pressure to the system.

25. Keep body and hands away from pin hole leaks in hydraulic lines that eject high pressure hydraulic fluid. Use cardboard or paper to find hydraulic leaks. Hydraulic fluid escaping under pressure can penetrate skin and cause injury. Fluid accidentally injected into the skin must be surgically removed within a few hours by a doctor familiar with this form of injury or gangrene may result.

26. Before disconnecting or performing any work on the hydraulic system, all pressure in system must be relieved by stopping engine and lowering cutting units to the ground.

27. If major repairs are ever needed or assistance is desired, contact an Authorized Toro Distributor.

28. To reduce potential fire hazard, keep engine area free of excessive grease, grass, leaves and dirt. Clean protective screen on front of engine frequently.

29. If engine must be running to perform maintenance or an adjustment, keep hands, feet, clothing and other parts of the body away from cutting units and other moving parts. Keep everyone away.

30. Do not overspeed the engine by changing governor setting. To assure safety and accuracy, have an Authorized Toro Distributor check maximum engine speed.

31. Shut engine off before checking or adding oil to the crankcase.

32. Disconnect battery before servicing the machine. If battery voltage is required for troubleshooting or test procedures, temporarily connect the battery.

33. At the time of manufacture, the machine conformed to the safety standards for riding mowers. To assure optimum performance and continued safety certification of the machine, use genuine Toro replacement parts and accessories. Replacement parts and accessories made by other manufacturers may result in non-conformance with the safety standards, and the warranty may be voided.

SOUND PRESSURE LEVEL

This unit has an equivalent continuous A-weighted sound pressure at the operator ear of: 88 dB(A), based on measurements of identical machines per Directive 84/538/EEC and amendments.

SOUND POWER LEVEL

This unit has a sound power level of: 101 dB(A)/1 pW, based on measurements of identical machines per Directive 84/538/EEC and amendments.

VIBRATION LEVEL

Hand-Arm

This unit does not exceed a vibration level of 2.5 m/s^2 at the hands based on measurements of identical machines per ISO 5349 procedures.

Whole Body

This unit does not exceed a vibration level of 0.5 m/s^2 at the posterior based on measurements of identical machines per ISO 2631 procedures.

SAFETY AND INSTRUCTION DECALS

The following safety and instruction decals are affixed to the traction unit. If any decal becomes illegible or damaged, install a new decal. Part numbers are listed below and in your Parts Catalog.

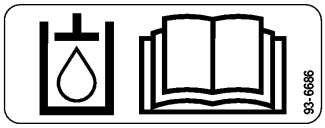

ON RIGHT FENDER
(Part No. 93−6686)

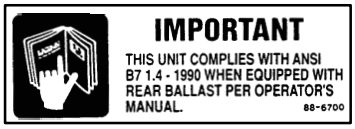

ON TOOL BOX COVER
(Part No. 88−6700)

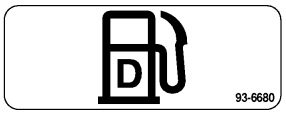

ON LEFT FENDER
(Part No. 93−6680)

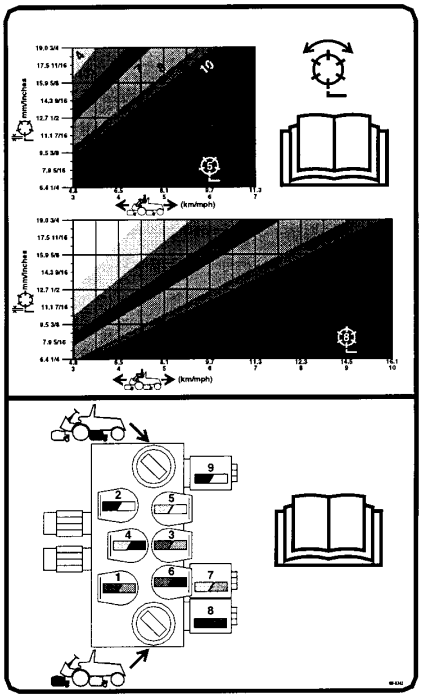

UNDER SEAT PLATE
(Part No. 98−9342)



ON FRONT WHEELS
(Part No. 76−8730)

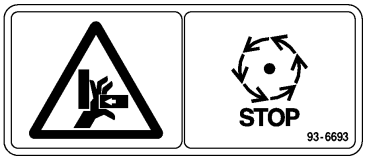

UNDER FLOOR PLATE
(Part No. 93−6693)

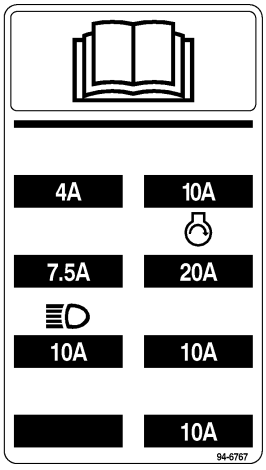

INSIDE CONTROL BOX
(Part No. 94−6767)



ON UNDERSIDE OF SEAT PLATE
(Part No. 93−8060)

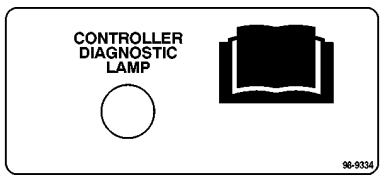

INSIDE CONTROL BOX
(Part No. 98−9334)

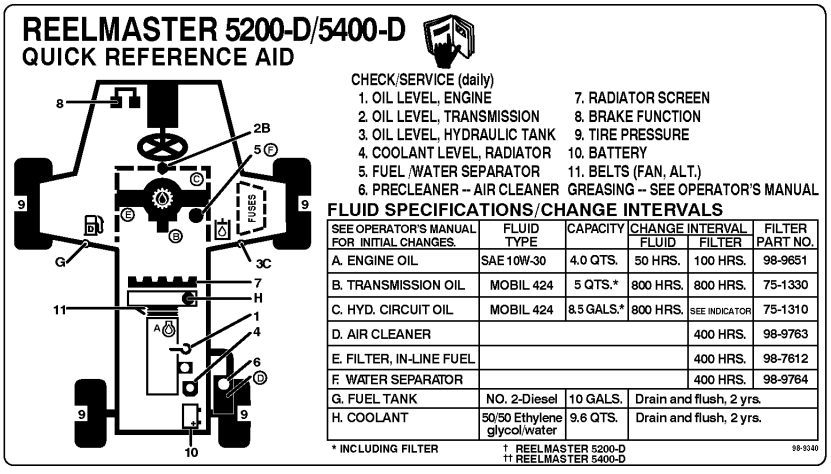

IN TOOL BOX
(Part No. 98−9340)

SAFETY AND INSTRUCTION DECALS



ON TOOL BOX
(Part No. 93−8051)

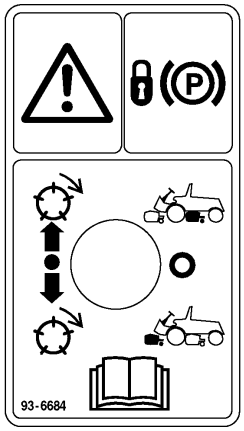

ON BACKLAP BRACKET
(Part No. 93−6684)

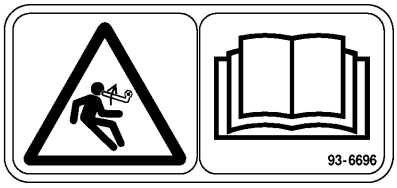

ON EACH CUTTING UNIT CARRIER FRAME
(Part No. 93−6696)

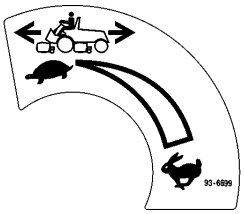

ON TOWER
(Part No. 93−6699)

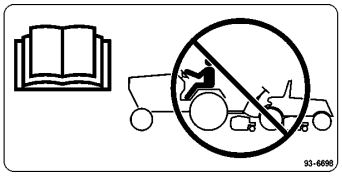

ON TOOL BOX COVER
(Part No. 93−6698)

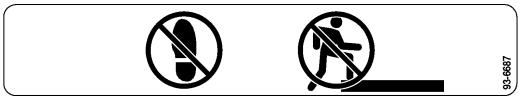

ON LIFT ARMS
(Part No. 93−6687)

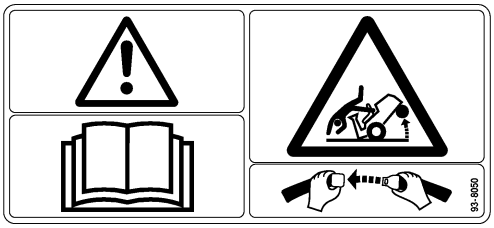

ON ROLL BAR ROOF
(Part No. 93−8050)
(Models 03541 & 03544 only)

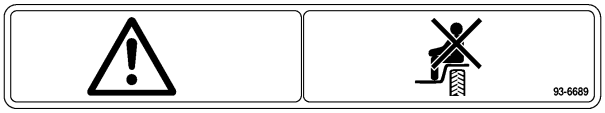

ON FENDERS
(Part No. 93−6689)



ON REAR AXLE
(Part No. 93−6697)
(Models 03541 & 03544 only)

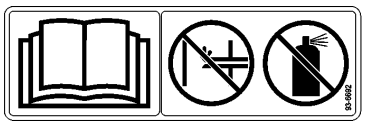

ON AIR CLEANER
(Part No. 93−6692)

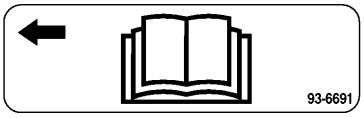

ON FRAME
(Part No. 93−6691)

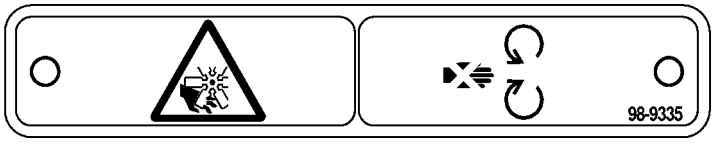

ON FAN SHROUD
(Part No. 98−9335)

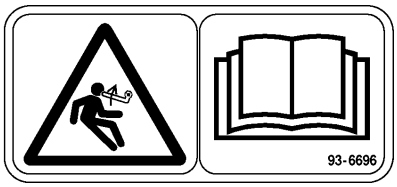

ON EACH LIFT ARM
(Part No. 93−6696)

SPECIFICATIONS

Engine: Kubota three cylinder, 4 cycle liquid cooled diesel engine. 25 hp @ 3000 rpm for Reelmaster 5200 and 31.5 hp @ 3000 rpm for Reelmaster 5400. Both governed to 3200 rpm. 68.5 cu. in. (1123 cc) displacement. Heavy duty, 3-stage, remote mounted air cleaner. High water temperature shutdown switch.

Cooling System: Radiator capacity is approximately 7−1/2 qts. of 50/50 mixture of ethylene glycol anti−freeze. Remote mounted 1 qt. expansion tank. A two speed fan drive controls air flow from fan.

Fuel System: Fuel tank capacity is 10 gal. of #2 diesel fuel. Equipped with a fuel filter/water separator to capture water in the fuel.

Traction System: Foot pedal controls forward/reverse ground speed. Ground speed: 0 −10 m.p.h forward and 0-4 reverse. Hydrostatic transmission mounted directly on a 20.9:1 ratio front axle. Axle/reservoir capacity is 5 qts. Replaceable filter mounted directly on transmission housing. Models 03541 & 03544 only−Mechanical rear axle is coupled to front axle by a driveshaft and overrunning clutch.

Cutting Unit Drive System: Hydraulic reel motors feature quick disconnects to ease removal/installation on cutting units. Hydraulic fluid reservoir capacity is 8.5 gal. System protected by a filter assembly with service indicator.

Seat: Deluxe high back seat with adjustable fore and aft travel, weight and height. Tool box at left side of seat.

Steering System: Power steering with dedicated power source.

Tires: Two rear tires: 19 x 8.50-8, tubeless, 4-ply rating. Two front tires: 26 x 12.00-12 tubeless, 4-ply rating. Recommended tire pressure for front and rear tires is 10-15 psi.

Brakes: Individual drum type wheel brakes on front traction wheels. Brakes controlled by individual pedals operated by the left foot. Hydrostatic braking through traction drive.

Electrical System: Automotive type electrical system. 12 volt, maintenance free battery with 530 cold cranking Amps @ 0 degrees F. and 85 minute reserve capacity @ 85 degrees F. 40 amp alternator with I.C. regulator/rectifier. Seat switch, reel and traction interlock switches. An electronic controller monitors and controls safety and operational functions.

Controls: Foot operated traction and brake pedals. Hand operated throttle, traction speed control lever, parking brake lock, ignition switch with automatic preheat cycle, single joy stick control for cutting unit on/off and lift/lower. Cutting unit backlap switch and reel speed controls located under control console.

Gauges: Hour meter, speedometer, fuel gauge, temperature gauge. 4 warning lamps: oil pressure, water temperature, amps and glow plug.

General Specifications (approx.):

Width−of−Cut:	95 in.
Overall Width:	
Transport	87 in.
Outside of tires	82 in.
Overall Length:	
Without grass baskets:	103.5 in.
With grass baskets:	116 in.
Height:	
Without ROPS installed:	56 in.
With ROPS installed:	84.5 in.
Recommended Height−of−Cut:	
5 Blade Cutting Unit:	1/2 − 3/4 in.
8 Blade Cutting Unit:	1/4 −5/8 in.
Weight:	
Models 03540 & 03543	2320 lbs.*
Models 03541 & 03544	2675 lbs.*

*With 8 Blade Cutting Units, baskets & full fluid levels

Optional Equipment

5 Blade Cutting Unit	Model No. 03506
8 Blade Cutting Unit	Model No. 03509
Premium 2−1/2" Rear Roller	Model No. 03523
Standard 2" Rear Roller	Model No. 03525
Grass Basket Kit	Model No. 03513
Armrest Kit	Model No. 30707
Thatching Reel	Model No. 03516
4 Wheel Drive Kit (For use with models 03540 & 03543 only)	Model No. 03517
Turf Compensation Kit	Model No. 03510
Turf Defender™ Electronic Leak Detector Kit	Model No. 03521
Solid Front Roller	Part No. 82−6680
Rear Weight Kit	Part No. 75−6690
Rear Weight Kit − 25 lb.	Part No. 98−9780
Rear Roller Scraper Kit (2" rollers only)	Part No. 92−3085
Rear Roller Scraper (all rear rollers)	Part No. 92−3085
Front Wiehle Roller Scraper	Part No. 83−5400
High Height of Cut Kit	Part No. 83−5300
Precleaner Bowl Extension Tube (Clamp, Part No. 20−4840 required to install extension tube)	Part No. 43−3810
Accessory Kit	Part No. 98−4504
Diagnostic ACE	Part No. 85−4750

Specifications and design subject to change without notice.

LOOSE PARTS CHART

Note: Use this chart as a checklist to assure all parts necessary for assembly have been received. Without these parts, total set-up cannot be completed.

DESCRIPTION	QTY.	USE
Locking Hood Switch Lockwasher Nut Key Hood Latch Bracket Capscrew 1/4−20 x 3/4" lg. Flat Washer .281 x .625 Locknut 1/4−20	1 1 1 2 1 2 2 2	Mount Locking Hood Latch for CE.
Flange Head Capscrew 5/16−18 x 5/8" Lg.	1	Replace Floor Panel Fastener for CE.
Cutting Unit Stop Capscrew 3/8 − 16 x 1" Locknut Screw Flatwasher Thrust Washer	1 1 1 5 5 5	Mount cutting units. (Supplied with Cutting Unit)
Capscrew 5/16 x1−3/4" lg. Lockwasher 5/16 Flatwasher .344 x .875 Torsion Spring − LH Torsion Spring − RH Basket Collar Basket Bracket Roll Pin Basket Guide Capscrew 5/16 x 1/2 Cutting Unit Baskets	5 10 10 2 3 5 5 5 5 5 5	Mount baskets on carrier frames. (Supplied with Basket Kit)
Hydraulic Filter (Transmission)	1	Change filter after first 10 hours operation.
EEC Decal EEC Certificate	4 2	Affix to machine.
Operator's Manual (Traction Unit) Parts Catalog	2 1	Read before operating machine.
Registration Card	1	Fill out and return to Toro.
Service Decal, Blank	1	Affix to machine (Europe only)

SET-UP INSTRUCTIONS

CONNECT BATTERY (Fig. 1)

WARNING

Connecting cables to the wrong post could result in personal injury and/or damage to the electrical system.

1. Open hood.

2. Ensure battery is securely fastened in place and check battery charge with a hydrometer. If battery needs charging, be sure at least one battery cable, preferable the positive (+) cable, is disconnected from the battery before connecting the charger.

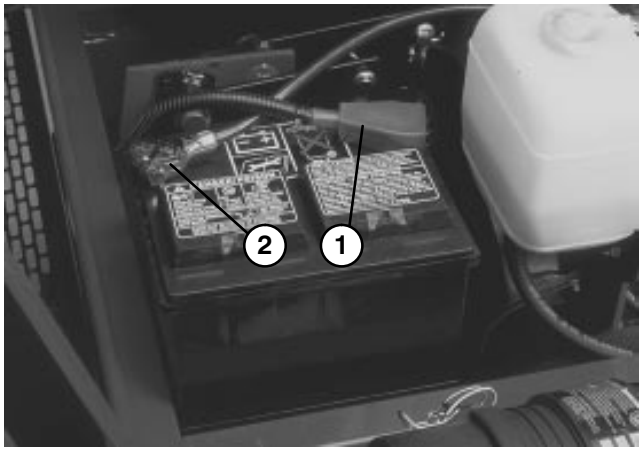

Figure 1

1. Positive Battery Cable
2. Negative Battery Cable

CAUTION

Wear safety goggles and rubber gloves when working with electrolyte. Charge the battery in a well ventilated area so gases produced while charging can dissipate. Since the gases are explosive, keep open flame and electrical spark away from the battery; do not smoke. Nausea may result if the gases are inhaled. Unplug charger from electrical outlet before connecting to, or disconnecting charger leads from battery posts.

3. Slide the red, positive battery cable onto the positive battery post and tighten nut securely.

4. Slide the black, negative battery cable onto the negative battery post and tighten nut securely.

5. Coat both battery connections with Grafo 112X (skin over) grease, Toro Part No. 505−47, petroleum jelly or light grease to prevent corrosion and slide rubber boot over positive terminal.

6. Close hood.

MOUNT HOOD LATCH (Fig. 2 & 3)

1. Remove plug from hole in left front corner of hood (Fig. 2).

2. Open hood.

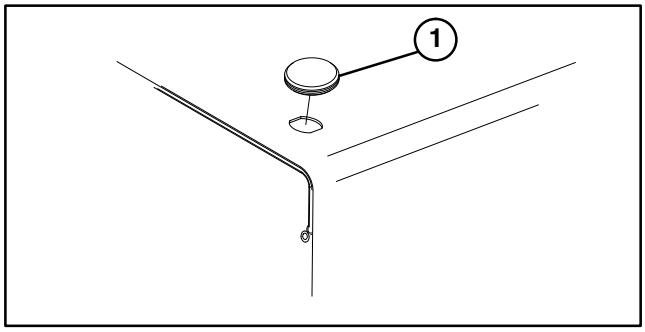

Figure 2

1. Hood plug

3. Mount locking switch to hood with lock washer and nut. Position switch with latch toward front of machine (FIg. 3).

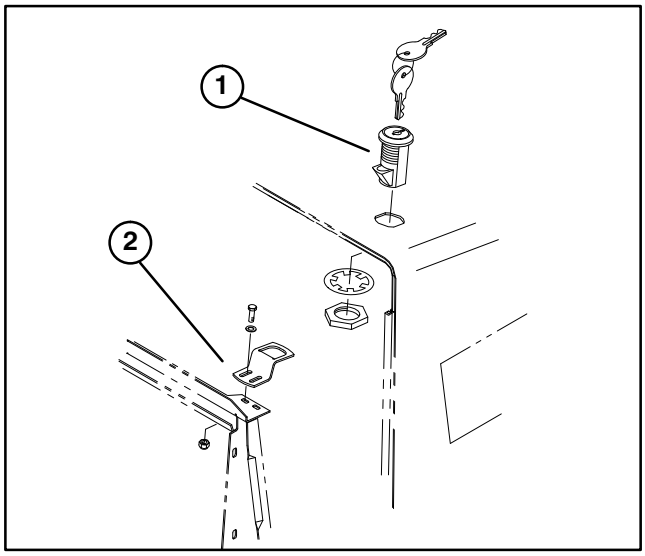

Figure 3

1. Locking switch
2. Latch bracket

4. Loosely mount latch bracket to radiator support with (2) 1/4−20 x 3/4" lg. capscrews, flat washers and locknuts (Fig. 3).

5. Adjust latch bracket, until aligned with switch latch, then tighten capscrews.

6. Rotate latch to locked and unlocked position with key. Remove key and store in memorable place.

7. Close hood.

SET-UP INSTRUCTIONS

REPLACE FLOOR PANEL FASTENER

(Fig. 4)

1. Remove fastener securing left front corner of floor panel to frame (Fig. 4).

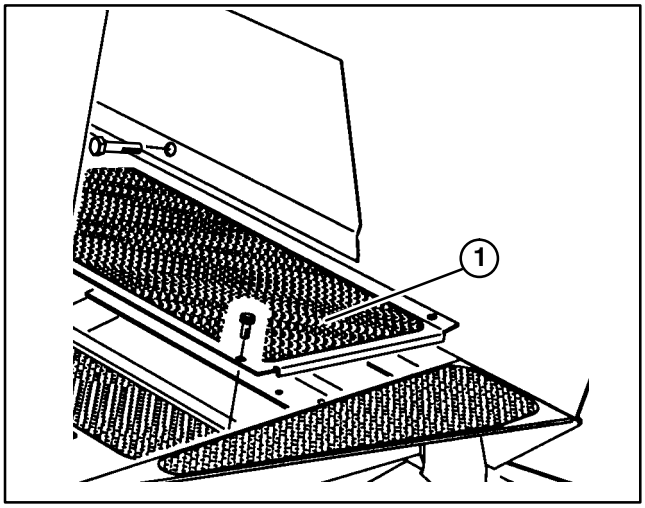

Figure 4
1. Floor panel

2. Replace with 5/16−18 x 5/8" lg. flange head capscrew supplied in loose parts (Fig. 4).

CHECK TIRE PRESSURE

The tires are over−inflated for shipping. Therefore, release some of the air to reduce the pressure. Correct air pressure in the front and rear tires is 10-15 psi.

IMPORTANT: Maintain even pressure in all tires to assure uniform contact with turf.

INSTALL CUTTING UNITS (Fig. 5−12)

1. Remove cutting units from cartons. Assemble and adjust per the Operator's Manual for the cutting unit.

2. If baskets will be installed, use chart below (Fig. 5) to determine locations at which basket guides or basket brackets must be mounted to cutting unit carrier frames. If baskets are not to be installed, proceed to step 7.

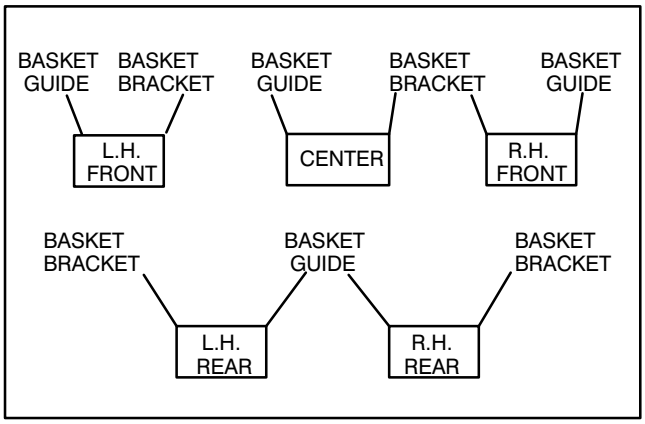

Figure 5

3. Remove hardware securing Turf compensation kit to each end of carrier frame (Fig. 6 & 7) and reuse when installing basket guides and basket brackets.

4. Mount a basket guide (Fig. 6) to the appropriate side of each cutting unit carrier frame (see figure 7) with a 5/16−18 x 1−3/4" lg. capscrew, flatwasher and lockwasher or fasteners previously removed, as shown in figure 6.

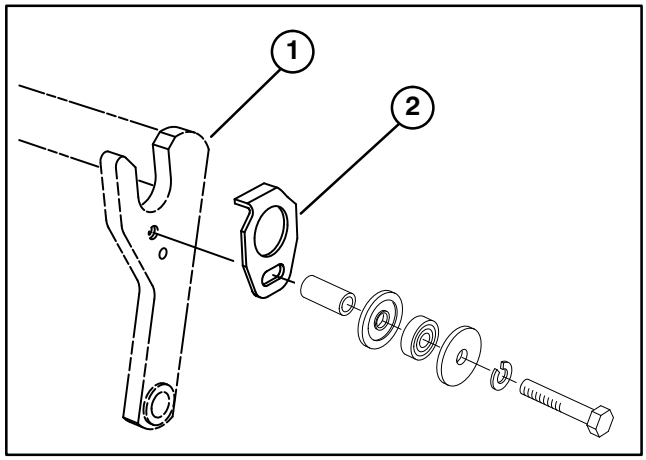

Figure 6
1. Carrier Frame
2. Basket Guide

5. Install a roll pin (Fig. 7) into hole in appropriate side of each cutting unit carrier frame (Fig. 5).

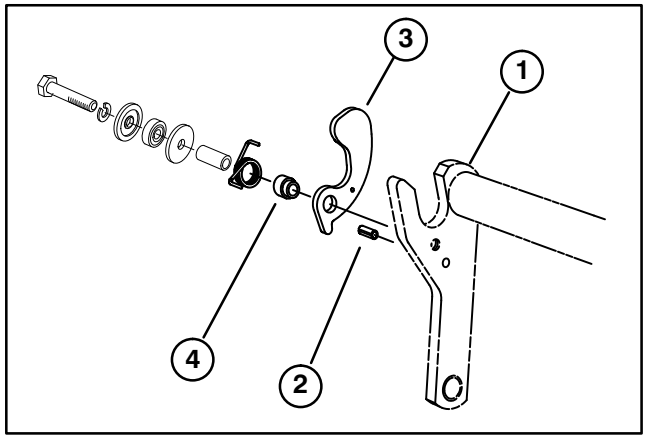

Figure 7
1. Carrier Frame
2. Roll pin
3. Basket Bracket
4. Basket Collar

6. On the same side of carrier frame as roll pin is installed, mount a basket bracket with a 5/16−18 x 1−3/4" lg. capscrew, lockwasher, flatwasher, torsion spring, basket collar or fasteners previously removed, as shown in figure 7. Torsion springs are different for L.H. and R.H. sides of carrier frames. Three are (2) L.H. and (3) R.H. springs. Longer leg of spring is to be positioned forward as shown in Fig. 8.

SET-UP INSTRUCTIONS

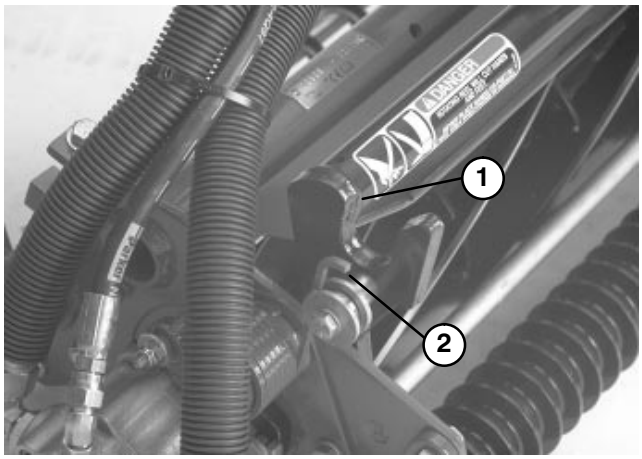

Figure 8

1. Basket Bracket
2. Torsion Spring

7. Align the mounting shaft of the cutting unit with the pivot tube on the carrier frame. Insert the shaft into the tube (Fig. 9).

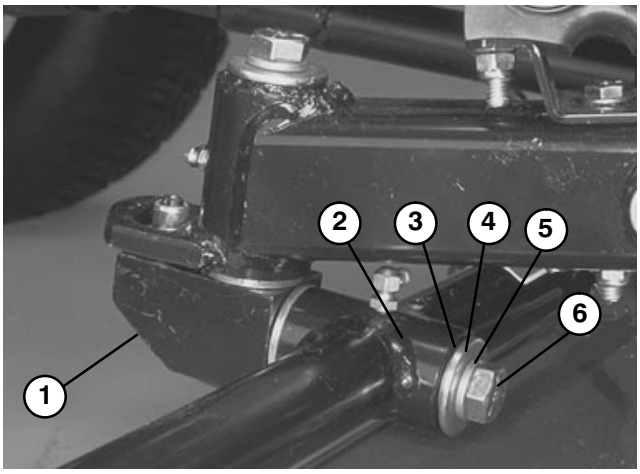

Figure 9

1. **Cutting Unit Mounting Shaft**
2. **Carrier Frame Pivot Tube**
3. **Thrust Washer**
4. **Flat Washer**
5. **Lock Washer**
6. **Capscrew**

8. Secure shaft in pivot tube with a thrust washer, flatwasher, lockwasher and capscrew (Fig. 9).

9. Assemble the mounting nuts for the reel drive motor to each cutting unit (Fig. 10). Leave approximately 1/2" of threads exposed on each mounting stud.

10. Coat the spline shaft of the motor with clean grease and install the motor by rotating the motor clockwise so the motor flanges clear the studs. Rotate the motor counterclockwise until the flanges encircle the studs and tighten the mounting nuts. Ensure the washers are against the nuts.

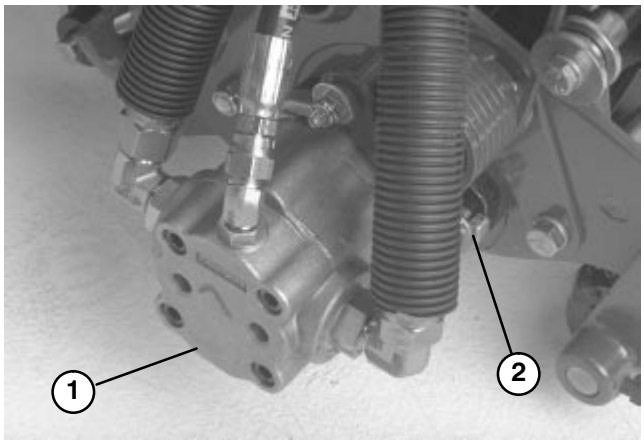

Figure 10

1. Reel Drive Motor 2. Mounting Nuts

11. Detach chain from lift arm and secure it to cross tube on each rear cutting unit with a capscrew, flatwasher and locknut (Fig. 11).

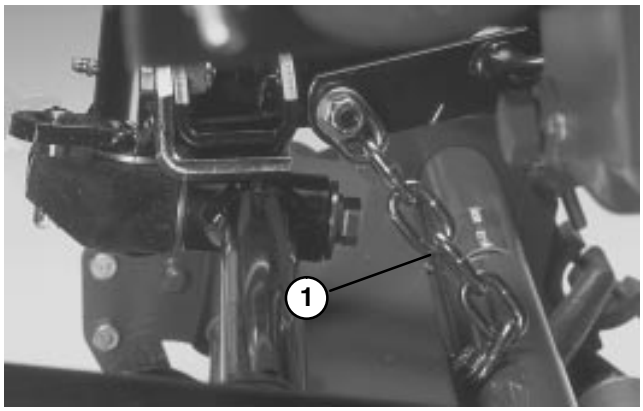

Figure 11

1. Lock Up Chain

IMPORTANT: Make sure all hydraulic hoses are routed away from cutting unit so when cutting unit pivots excessive rubbing does not occur.

12. Check adjustment of lock−up rollers (Fig. 12). When properly adjusted, they will contact the lock−up levers on rear lift arms and support the cutting units when fully raised. The cutting units should have approximately 3/8"− 5/8" vertical travel measured at the rear roller.

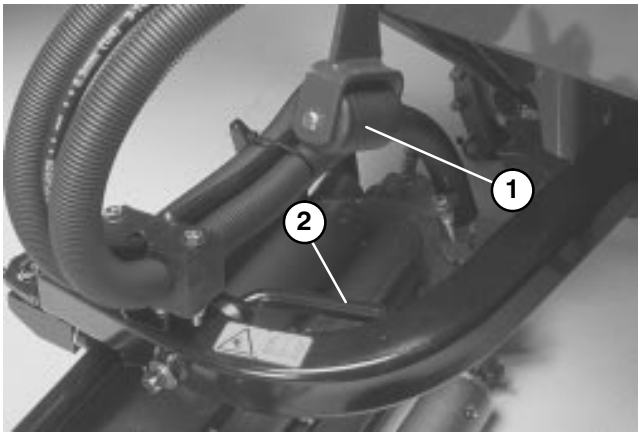

Figure 12

1. Lock−up Rollers 2. Lock−up Levers

13. Mount a basket to each cutting unit carrier frame by inserting basket mounting pin into basket bracket and depressing opposite mounting pin into pivoting bracket.

INSTALL REAR WEIGHT

The Reelmaster 5200−D & 5400−D Traction Units comply with ANSI B71.4−1990 and EN836 Standards when equipped with rear weight and 90 lbs. of calcium chloride ballast is added to rear wheels. Use chart below to determine combinations of weight required. Order parts from your local Authorized Toro Distributor.

	Rear Weight Required	Weight Part Number	Weight Description	Qty.
2wd Traction Unit with ROPS w/o baskets	291 lb.	75−6690	Rear Weight Kit	3
2wd Traction Unit with ROPS with baskets	358 lb.	75−6690	Rear Weight Kit	4
2wd Traction Unit w/o ROPS w/o baskets	157 lb.	75−6690	Rear Weight Kit	1
2wd Traction Unit w/o ROPS with baskets	224 lb.	75−6690	Rear Weight Kit	2
4wd Traction Unit with ROPS w/o baskets	157 lb.	75−6690	Rear Weight Kit	1
4wd Traction Unit with ROPS w/o baskets	249 lb.	75−6690 98−9780	Rear Weight Kit Rear Weight Kit−25 lb.	2 1

IMPORTANT: If a puncture occurs in a tire with calcium chloride, remove unit from turf area as quickly as possible. To prevent possible damage to turf, immediately soak affected area with water.

BEFORE OPERATING

CAUTION

Before servicing or making adjustments to the machine, stop engine and remove key from the switch. Lower cutting units to the ground.

CHECK ENGINE OIL (Fig. 13 & 14)

1. Park machine on a level surface, stop engine and remove key from ignition switch. Open hood.

2. Remove dipstick, wipe clean and reinstall dipstick. Remove dipstick and check oil level on dipstick; Oil level should be up to FULL mark (Reelmaster 5200 – Fig. 13, Reelmaster 5400 – Fig. 14).

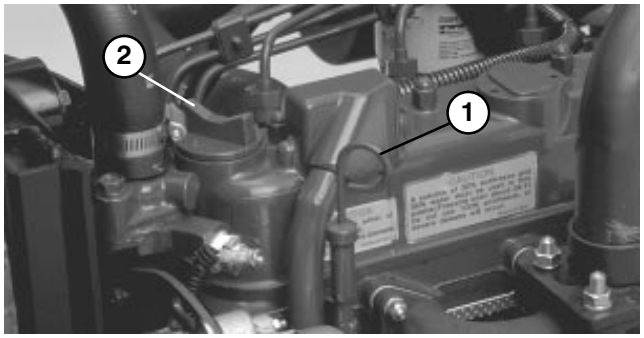

Figure 13
1. Dipstick
2. Oil Fill Cap

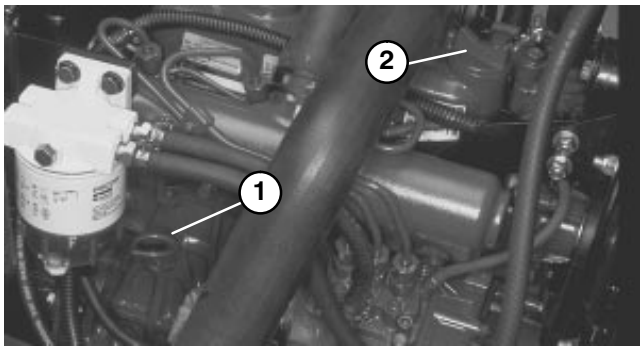

Figure 14
1. Dipstick
2. Oil Fill Cap

3. If oil is below FULL mark, remove fill cap and add SAE 10W–30 CD, CE, CF, CF–4 or CG–4 classification oil until level reaches FULL mark on dipstick. DO NOT OVERFILL. Crankcase capacity is 4.0 qt. with filter.

4. Install oil fill cap and close hood.

CHECK COOLING SYSTEM (Fig. 15)

Clean debris off screen, oil cooler and front of radiator daily, more often if conditions are extremely dusty and dirty; refer to section on Engine Cooling System.

The cooling system is filled with a 50 / 50 solution of water and permanent ethylene glycol anti–freeze. Check level of coolant in expansion tank at beginning of each day before starting the engine. Capacity of cooling system is 9.6 quarts.

CAUTION

If engine has been running, pressurized hot coolant can escape when radiator cap is removed and cause burns.

1. Check level of coolant in expansion tank. Coolant level should be between the marks on side of tank.



Figure 15
1. Expansion Tank

2. If coolant level is low, remove expansion tank cap and replenish the system. DO NOT OVERFILL.

3. Install expansion tank cap.

FILL FUEL TANK (Fig. 16)

1. Remove fuel tank cap.

2. Fill tank to about one inch below top tank, not filler neck with No. 2 diesel fuel. Then install cap.

DANGER

Because diesel fuel is flammable, use caution when storing or handling it. Do not smoke while filling the fuel tank. Do not fill fuel tank while engine is running, hot, or when machine is in an enclosed area. Always fill fuel tank outside and wipe up any spilled diesel fuel before starting the engine. Store fuel in a clean, safety–approved container and keep cap in place. Use diesel fuel for the engine only; not for any other purpose.



Figure 16
1. Fuel Tank Cap

CHECK TRANSMISSION FLUID (Fig. 17)

The front axle housing acts as the reservoir for the system. The transmission and axle housing are shipped from the factory with approximately 5 quarts of Mobil 424 hydraulic fluid. However, check level of transmission oil before engine is first started and daily thereafter.

1. Position machine on a level surface, lower the cutting units and stop the engine.

2. Remove access panel behind foot rest.

3. Remove floor panel.

4. Unscrew dipstick cap from the transmission filler neck and wipe it with a clean rag. Screw dipstick into filler neck. Remove the dipstick and check level of oil. If level is not within 1/2 inch from the groove in the dipstick, add enough oil to raise level to groove mark. DO NOT OVERFILL by more than 1/4 inch above groove.

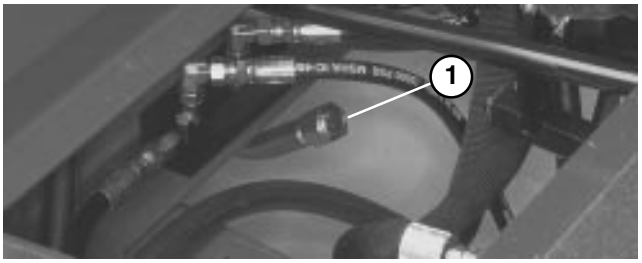

Figure 17
1. Transmission Dipstick Cap

5. Screw dipstick filler cap finger−tight onto filler neck. It is not necessary to tighten cap with a wrench.

CHECK HYDRAULIC FLUID (Fig. 18)

The hydraulic system driving the reels is designed to operate on anti−wear hydraulic fluid. The machines reservoir is filled at the factory with approximately 8.5 gallons of Mobil 424 hydraulic fluid. **Check level of hydraulic fluid before engine is first started and daily thereafter.**

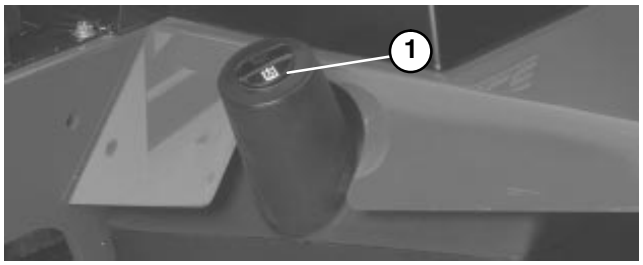

Figure 18
1. Hydraulic Tank Cap

Group 1 Hydraulic Fluid (Recommended for ambient temperatures consistently below 100˚ F.):

ISO type 46/68 anti−wear hydraulic fluid

Mobil	Mobil Fluid 424
Amoc	Amoco 1000
International Harvester	Hy−Tran
Texaco	TDH
Shell	Donax TD
Union OIl	Hydraulic/Tractor Fluid
Chevron	Tractor Hydraulic Fluid
BP Oil	BP HYD TF
Boron OIl	Eldoran UTH
Exxon	Torque Fluid
Conoco	Power−Tran 3
Kendall	Hyken 052
Phillips	HG Fluid

Note: The fluids within this group are interchangeable.

Group 2 Hydraulic Fluid (Recommended for ambient temperatures consistently above 70˚ F.):

ISO type 68 anti−wear hydraulic fluid

Mobil	DTE 26 or DTE 16
Shell	Tellus 68
Amoco	Rykon Oil 68
Arco	Duro AW S−315
Boron	Industron 53
BP Oil	Energol HLP68
Castrol	Hyspin AWS68
Chevron	Chevron EP68
Citgo	Citgo A/W68
Conoco	Super Hydraulic Oil 31
Exxon	Nuto H68
Gulf	68AW
Pennzoi	lAW Hyd Oil 68
Phillips	Magnus A315
Standard	Industron 53
Texaco	Rando HD68
Union	Unax AW 315

Note: The fluids within this group are interchangeable.

IMPORTANT: Two groups of hydraulic fluid are specified to allow optimal operation of the machine in a wide range of temperatures encountered. The group 1 fluids are a multi−viscosity hydraulic fluids which allows operation at lower temperatures without the increased viscosity, which is associated with straight viscosity fluids.

Using the Mobil 424 type fluids in the higher ambient temperatures may result in decreased efficiency in some of the hydraulic components compared to using the Mobil DTE 26 type fluids.

The Mobil DTE 26 type fluids are straight viscosity fluids which remain slightly more viscous at higher temperatures than the multi−viscosity fluids.

Using the Mobil DTE 26 type fluids in the lower ambient temperatures may result in harder starting, increased engine laboring while cold, sluggish or non−operating valve spools while cold and increase filter back pressure due to the higher fluid viscosity.

It is recommended that you select which set of conditions (either ambient temperatures above 70˚ F. or below 100˚ F.), and use that type of fluid throughout the year, rather than changing fluid types several times per year.

Group 3 Hydraulic Fluid (Biodegradable):

ISO VG 32/46 anti−wear hydraulic fluid

Mobil EAL 224 H

Note: This biodegradable hydraulic fluid in this group is not compatible with the fluids in group 1 or 2.

NOTE: When changing from one type of hydraulic fluid to the other, be certain to remove all the old fluid from the system, because some brands of one type are not completely compatible with some brands of the other type of hydraulic fluid.

IMPORTANT: Use only types of hydraulic fluids specified. Other fluids could cause system damage.

Note: A red dye additive for the hydraulic system fluid is available in 2/3 oz. bottles. One bottle is sufficient for 4−6 gal. of hydraulic fluid. Order Part No. 44−2500 from your Authorized Toro Distributor

1. Position machine on a level surface, lower the cutting units and stop the engine.

2. Clean area around filler neck and cap of hydraulic tank. Remove cap from filler neck.

3. Remove dipstick from filler neck and wipe it with a clean rag. Insert dipstick into filler neck; then remove it and check level of fluid. Fluid level should be within 1/4 inch of mark on dipstick.

4. If level is low, add appropriate fluid to raise level to full mark.

5. Install dipstick and cap onto filler neck.

CHECK REAR AXLE LUBRICANT

(Fig. 19 & 20) (Models 03541 & 03544 only)

The rear axle has three separate reservoirs which use SAE 80W-90 wt. gear lube. Although the axle is shipped with lubricant from the factory, check the level before operating the machine.

1. Position the machine on a level surface.

2. Remove a check plug from each end of axle and make sure lubricant is up to bottom of hole. If level is low, remove one of the mounting bolts above each end plug and add enough lubricant to bring the level up to the bottom of the hole (Fig. 19).

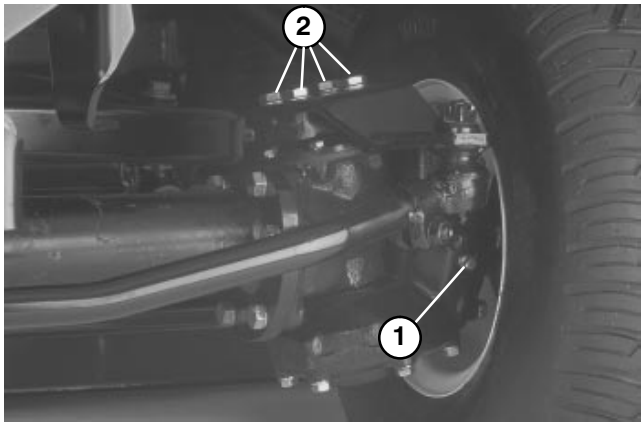

Figure 19

1. Check Plugs (2) 2. Mounting Bolts

3. Remove plug in center of axle and check level. If level is low, add enough lubricant to bring the level up to the bottom of the hole (Fig. 20).

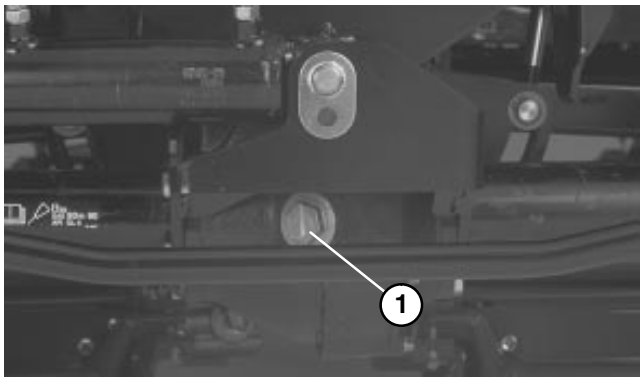

Figure 20

1. Check / Fill Plug

CHECK REEL TO BEDKNIFE CONTACT

Each day before operating, check reel to bedknife contact, regardless if quality of cut had previously been acceptable. There must be light contact across the full length of the reel and bedknife (refer to Adjusting Reel to Bedknife in Cutting Unit Operator's Manual).

CHECK TORQUE OF WHEEL NUTS

WARNING

Tighten wheel nuts to 45-55 ft−lb after 1-4 hours of operation and again after 10 hours of operation and every 250 hours thereafter. Failure to maintain proper torque could result in failure or loss of wheel which may result in personal injury.

KNOW YOUR CONTROLS

Seat (Fig. 21) – Seat adjusting lever allows 4 inch fore and aft adjustment. Seat adjusting knob adjusts seat for operators weight. To adjust seat fore and aft, pull lever on left side of seat assembly outward. After moving seat to desired location, release lever to lock seat into position. To adjust for operators weight, turn spring tension knob; clockwise to increase tension, counterclockwise to decrease spring tension.

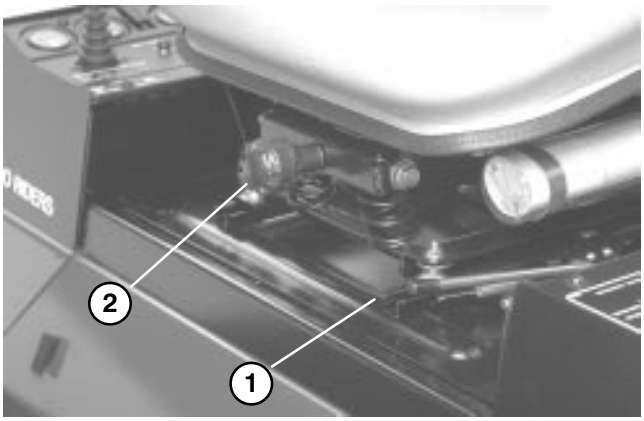

Figure 21

1. Seat Adjusting Lever
2. Seat Adjusting Knob

Traction Pedal (Fig. 22) – Controls forward and reverse operation. Depress top of pedal to move forward and bottom to move backward. Ground speed depends on how far pedal is depressed. For no load, maximum ground speed, fully depress pedal while throttle is in FAST.

To stop, reduce foot pressure on traction pedal and allow it to return to center position.

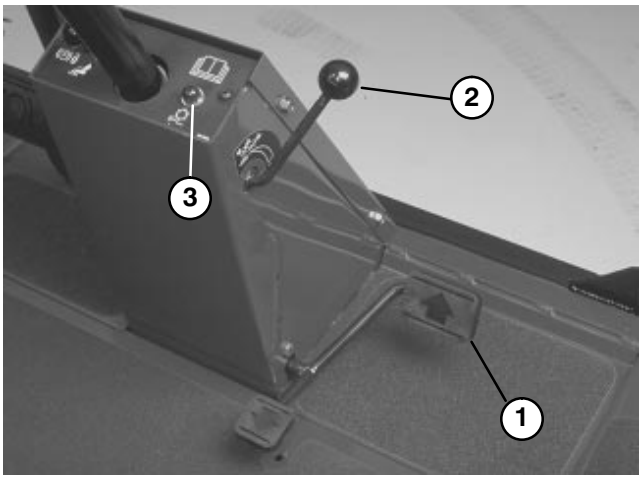

Figure 22

1. Traction Pedal
2. Traction Speed Limiter
3. Fault Light

Traction Speed Limiter (Fig. 22) – Preset this lever to limit the amount the traction pedal can be depressed in the forward direction to maintain a constant mowing speed.

Fault Light (Fig. 22) – When lit, indicates control system problem.

Lower Mow / Raise Control Lever (Fig. 23) – The lever raises and lowers the cutting units and also starts and stops the reels.

Speedometer (Fig. 23) – Indicates ground speed at which machine is traveling.

Fuel Gauge (Fig. 23) – Shows amount of fuel in tank.

Engine Oil Pressure Warning Light (Fig. 23) – Indicates dangerously low engine oil pressure.

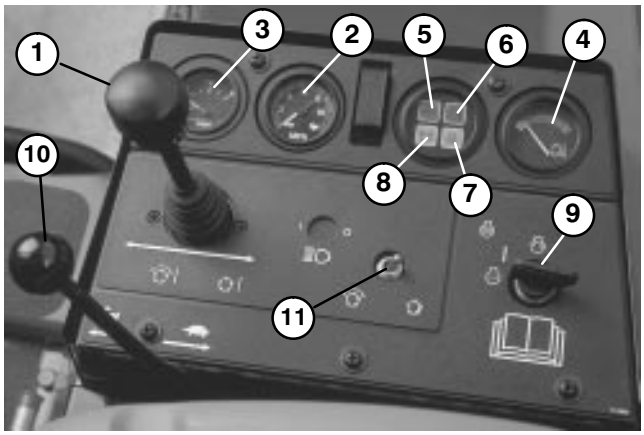

Figure 23

1. Lower Mow / Raise Control Lever
2. Speedometer
3. Fuel Gauge
4. Engine Coolant Temperature Gauge
5. Engine Oil Pressure Warning Light
6. Engine Coolant Temperature Warning Light
7. Glow Plug Indicator Light
8. Charge Indicator
9. Key Switch
10. Throttle Control
11. Enable / Disable switch

Engine Coolant Temperature Warning Light (Fig. 23) – The light illuminates and engine shuts down when coolant reaches a dangerously high temperature.

Glow Plug Indicator Light (Fig. 23) – When lit, indicates glow plugs are on.

Charge Indicator (Fig. 23) – Illuminates when system charging circuit malfunctions.

Key Switch (Fig. 23) – Three positions: OFF, ON / Preheat and START.

Throttle Control (Fig. 23) – Move control forward to increase engine speed, rearward to decrease speed.

Enable / Disable Switch (Fig. 23) – Used in conjunction with lower mow / raise control lever (Joystick) to operate reels. Reels can be raised but not lowered when in mid position.

KNOW YOUR CONTROLS

Backlap Switch (Fig. 24) – Used in conjunction with lower mow / raise control lever for backlapping operation. Refer to Cutting Unit Maintenance, Backlapping.



Figure 24
1. Backlap Switch

Reel Speed Controls (Fig. 25) – Controls RPM of front and rear cutting units. #1 position is for backlapping. Remaining settings are for mowing operations. See section in manual for operating instructions.

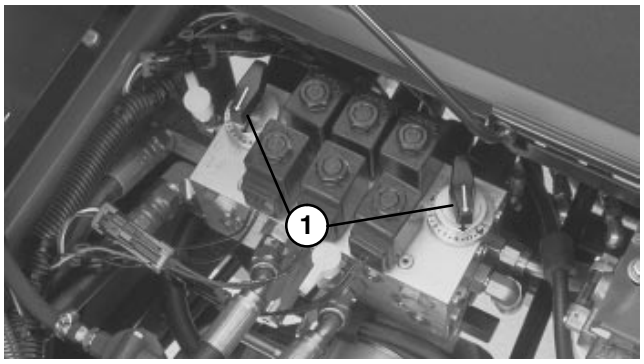

Figure 25
1. Reel Speed Controls

Hour Meter (Fig. 26) – Shows total hours that machine has been operated.

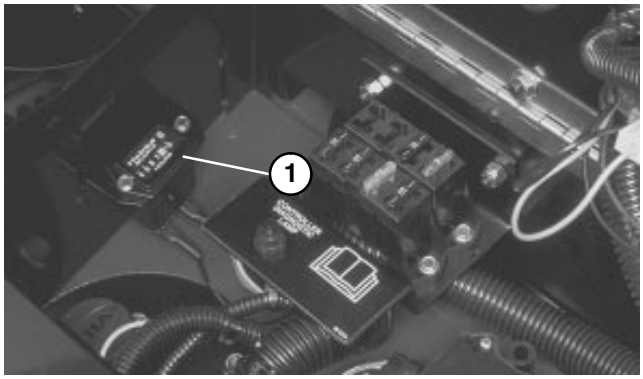

Figure 26
1. Hour Meter

Brake Pedals (Fig. 27) – Two foot pedals operate individual wheel brakes for turning assistance, parking and to aid in obtaining better sidehill traction. Locking pin connects the pedals for parking brake operation and transport.

Parking Brake Latch (Fig. 27) – A knob on the left side of console actuates parking brake lock. To engage parking brake, connect pedals with locking pin, push down on both pedals and pull parking brake latch out. To release parking brake, depress both pedals until parking brake latch retracts.

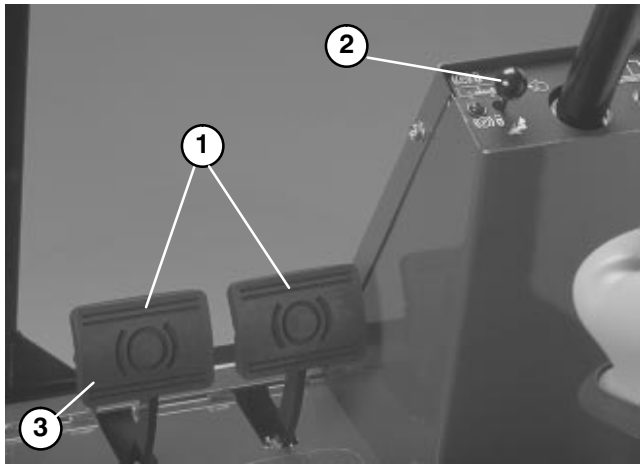

Figure 27
1. Brake Pedals
2. Parking Brake Latch
3. Locking Pin

OPERATING INSTRUCTIONS

CAUTION

Before servicing or making adjustments to the machine, stop engine and remove key from the switch. Lower cutting units to the ground.

STARTING AND STOPPING

IMPORTANT: The fuel system must be bled if any of the following situations have occurred.

A. Initial start up of a new machine.

B. Engine has ceased running due to lack of fuel.

C. Maintenance has been performed upon fuel system components; i.e., filter replaced, separator serviced, etc.

Refer to Bleeding The Fuel System

1. Sit on the seat, keep foot off traction pedal. Assure parking brake is engaged, traction pedal is in NEUTRAL, throttle is in FAST position and the ENABLE / DISABLE switch is in the DISABLE position.

2. Turn ignition switch to ON / Preheat position. An automatic timer will control preheat for 6 seconds. After preheat, turn key to START position. CRANK ENGINE FOR NO LONGER THAN 15 SECONDS. Release key when engine starts. If additional preheat is required, turn key to OFF position then to ON / preheat position. Repeat process as required.

3. Run engine at idle speed or partial throttle until engine warms up.

Note: Move throttle to FAST position when restarting a warm engine.

4. To stop, move all controls to NEUTRAL and set parking brake. Return throttle to the idle position, turn key to OFF and remove it from switch.

BLEEDING FUEL SYSTEM (Fig. 28 – 30)

1. Raise hood over engine.

2. Loosen air bleed screw on top of fuel filter/water separator (Fig. 28).

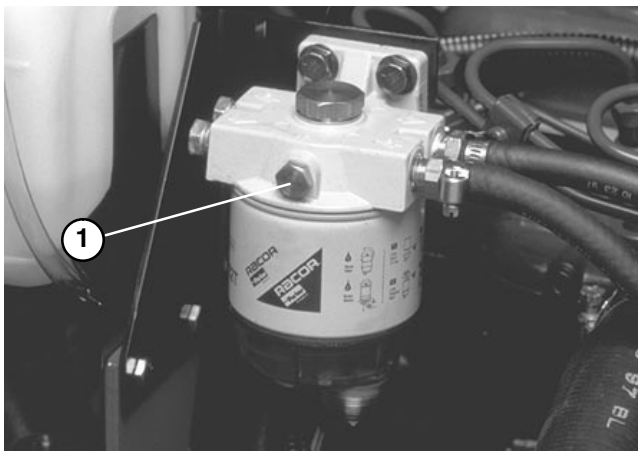

Figure 28
1. Air bleed screw

3. Pump lever on fuel pump (Fig. 29) until a solid stream of fuel flows out around screw. Tighten air bleed screw.

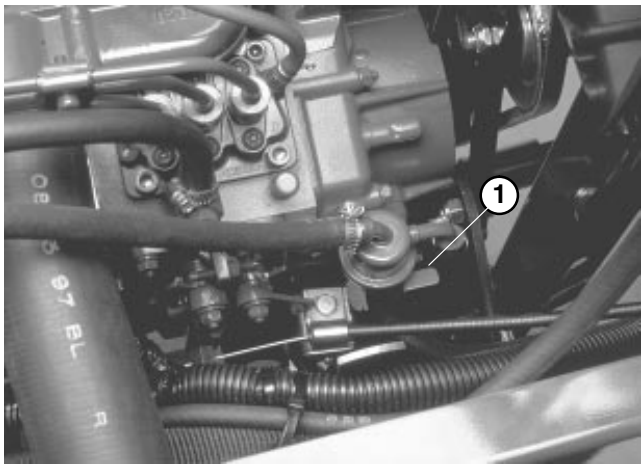

Figure 29
1. Fuel pump lever

4. Open the air bleed screw on the fuel injection pump (Fig. 30) with a 12 mm wrench.

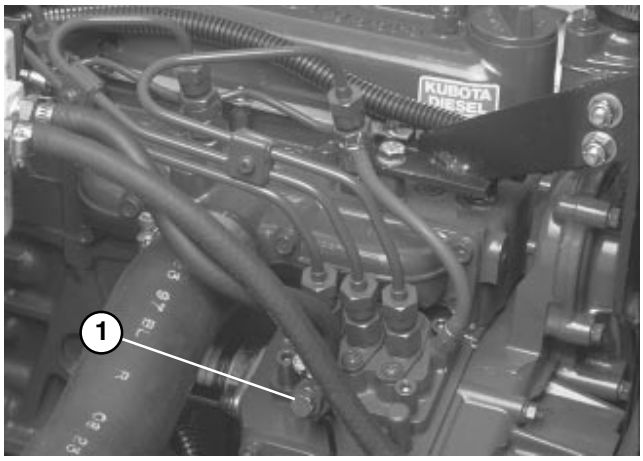

Figure 30
1. Fuel injection pump bleed screw

5. Pump lever on fuel pump (Fig. 29) until a solid stream of fuel flows out around screw on fuel injection pump. Tighten air bleed screw.

Note: Normally, engine should start after above bleeding procedures are followed. However, if engine does not start, air may be trapped between injection pump and injectors; refer to Bleeding Air From Injectors.

SETTING REEL SPEED (Fig. 32)

To achieve a consistent, high quality−of−cut and a uniform after cut appearance, it is important that the reel speed controls (located under seat) be correctly set.

Adjust the reel speed controls as follows:

1. Select the height−of−cut at which the cutting units are set.

2. Choose the desired ground speed best suited for conditions.

3. Using the appropriate graph (See graph figure 31) for 5 blade or 8 blade cutting units, determine the proper reel speed setting.

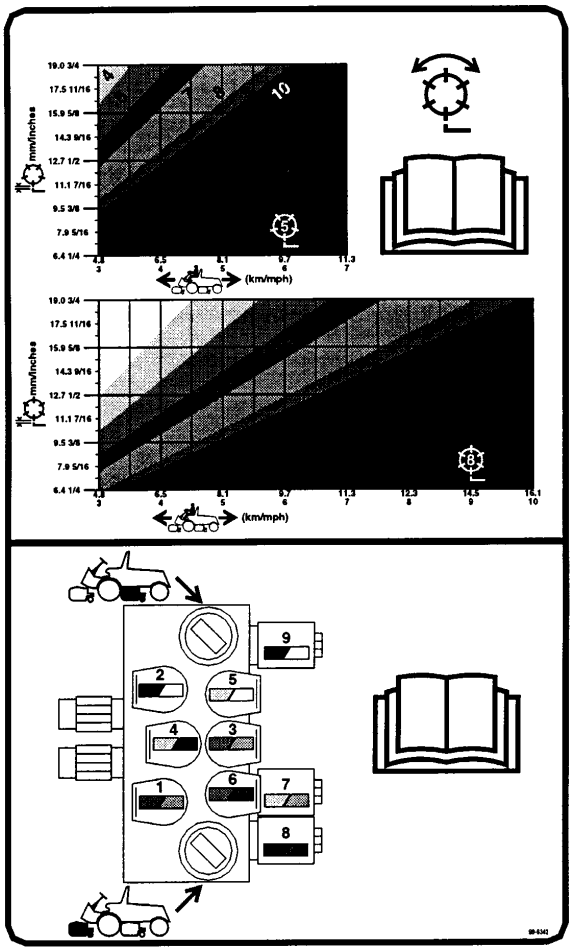

Figure 31

4. To set reel speed, rotate knobs (Fig. 32) until indicator arrows are in line with the number designating desired setting.

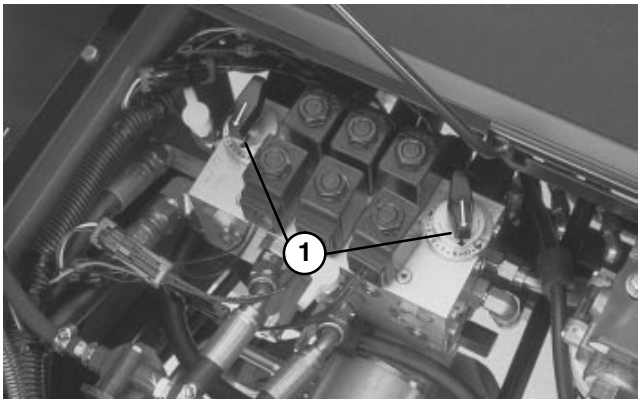

Figure 32
1. Reel Speed Control Knobs

Note: Reel speed can be increased or decreased to compensate for turf conditions.

ADJUSTING LIFT ARM DOWN PRESSURE (Fig. 33)

The down pressure spring on each cutting unit lift arm can be adjusted to compensate for different turf conditions. Increased down pressure will help keep the cutting units on the ground when mowing at higher speeds and helps maintain a uniform height−of−cut in rough conditions or in areas of thatch build up.
Each down pressure spring may be adjusted to one of four settings. Each increment increases or decreases down pressure on cutting unit by 8 lbs.

1. Position machine on a level surface, lower the cutting units, stop the engine, engage the parking brakes and remove key from ignition switch.

2. Remove floor plate in front of seat and open the hood to gain access to all (5) springs.

CAUTION

Springs are under tension, use caution when adjusting.

3. Place an open end wrench on the hex shaft of the spring bracket.

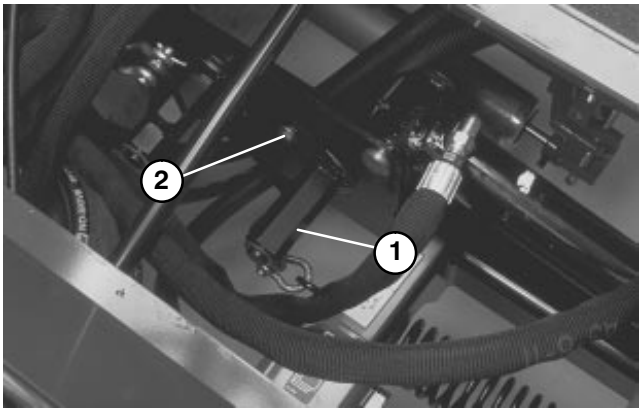

Figure 33
1. Spring Bracket Hex Shaft
2. Retaining Bracket

4. Remove the capscrew and locknut securing retaining bracket, while rotating hex shaft to relieve spring tension.

5. Move spring bracket to desired location and install capscrew and locknut, while rotating hex shaft to relieve spring tension.

TOWING TRACTION UNIT (Fig. 34 & 35)

If it becomes necessary to tow the machine, tow it forward only and at a speed no greater than 10 mph.

Note: If these towing limits are exceeded, severe damage to the hydrostatic transmission may occur.

To Tow a disabled machine:

1. Loosen and remove capscrews securing the drive shaft to the engine drive coupler. Loosen capscrews clamping drive shaft to transmission (Fig. 34). Remove drive shaft.

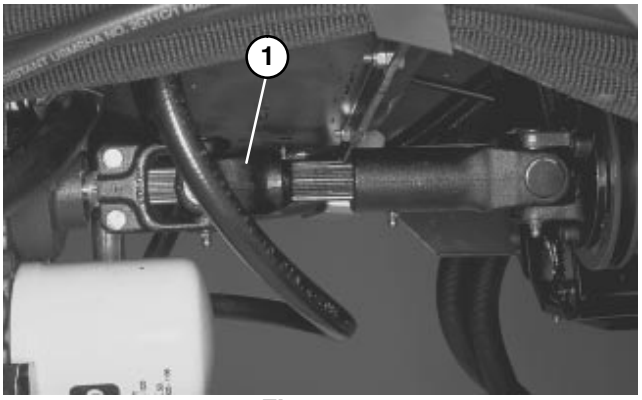

Figure 34
1. Drive Shaft

Important: If drive shaft is not removed before towing, the transmission input shaft will not be able to rotate, thus not allowing the transmission to maintain its internal lubrication. Severe damage to the hydrostatic transmission may occur.

2. Attach a suitable chain, strap or cable to the center of the front frame member (Fig. 35).

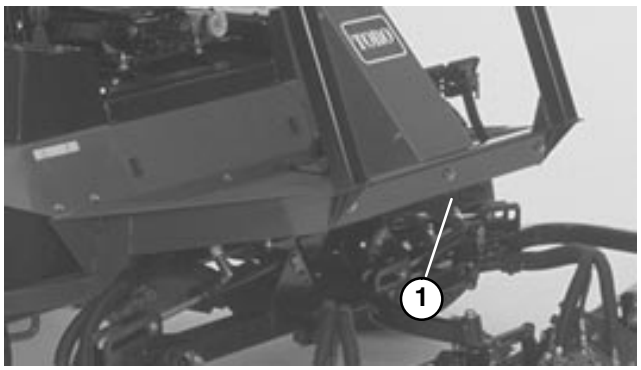

Figure 35
1. Center of Front Frame Member

Note: Lock both brake pedals together before towing.

3. Attach the other end of the towing device to a vehicle that is capable of towing the machine safely and at speeds below 10 mph.

4. An operator must be on the machine to steer it and keep the traction pedal fully depressed in the forward position while towing.

5. When towing is completed, reinstall driveshaft as shown in figure 34. The splines are designed to allow assembly only when the two halves of the shaft are properly oriented.

DIAGNOSTIC LIGHT (Fig. 36)

The RM 5200−D / 5400−D is equipped with a diagnostic light which indicates if the electronic controller is functioning correctly. The green diagnostic light is located under the control panel, next to the fuse block. When the electronic controller is functioning correctly and the key switch is moved to the ON position, the controller diagnostic light will be illuminated. The light will blink if the controller detects a malfunction in the electrical system. The light will stop blinking and automatically reset when the key switch is turned to the OFF position.

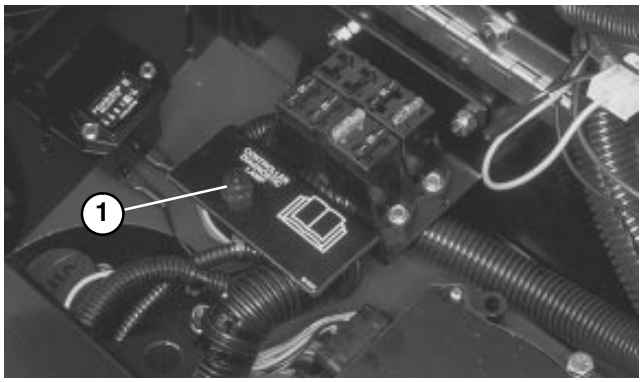

Figure 36
1. Electronic Controller Light

When the controller diagnostic light blinks, one of the following problems has been detected by the controller:

1. One of the outputs has been shorted.
2. One of the outputs is open circuited.

Using the diagnostic display, determine which output is malfunctioning, refer to Checking Interlock Switches.

If the diagnostic light is not illuminated when the key switch is in the ON position, this indicates that the electronic controller is not operating. Possible causes are:

1. Loopback is not connected.
2. The light is burned out.
3. Fuses are blown.
4. Not functioning correctly.

Check electrical connections, input fuses and diagnostic light bulb to determine malfunction. Make sure loopback connector is secured to wire harness connector.

DIAGNOSTIC ACE DISPLAY

The RM 5200−D / 5400−D is equipped with an electronic controller which controls most machine functions. The controller determines what function is required for various input switches (i.e. seat switch, key switch, etc.) and turns on the outputs to actuate solenoids or relays for the requested machine function. For the electronic controller to control the machine as desired, each of the input switches, output solenoids and relays must be connected and functioning properly.

The Diagnostic ACE display is a tool to help the user verify correct electrical functions of the machine.

CHECKING INTERLOCK SWITCHES

The purpose of the interlock switches are to prevent the engine from cranking or starting unless the traction pedal is in NEUTRAL, the Enable / Disable switch is in DISABLE and the Lower Mow / Raise control is in the neutral position. In addition, the engine will stop when the traction pedal is depressed with operator off the seat.

CAUTION

THE INTERLOCK SWITCHES ARE FOR THE PROTECTION OF THE OPERATOR AND BYSTANDERS, AND TO ENSURE CORRECT OPERATION OF THE MACHINE, SO DO NOT BYPASS OR DISCONNECT THEM. CHECK OPERATION OF THE SWITCHES DAILY TO ASSURE INTERLOCK SYSTEM IS OPERATING. IF A SWITCH IS DEFECTIVE, REPLACE IT BEFORE OPERATING. THE CONTROLLER HAS THE ABILITY TO DETECT BYPASSED SWITCHES AND MAY PREVENT THE OPERATION OF THE MACHINE IF SWITCHES ARE BYPASSED. DO NOT RELY ENTIRELY ON SAFETY SWITCHES – USE COMMON SENSE!

To verify interlock switch function:

1. Park machine on a level surface, lower the cutting units, stop the engine and engage the parking brake.

2. Open control panel cover. Locate wire harness and connectors near controller. Carefully unplug loop back connector from harness connector.

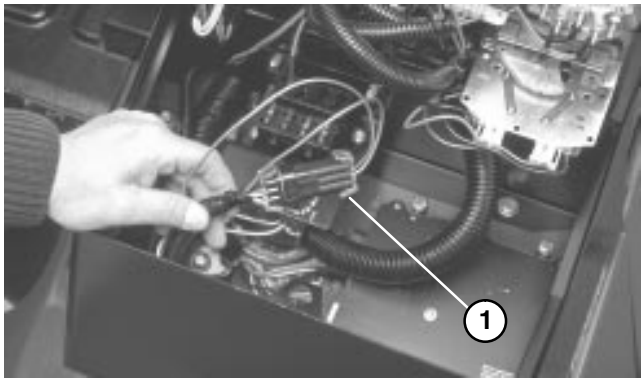

Figure 39

1. Wire Harness and Connectors

3. Connect the Diagnostic ACE display connector to the harness connector. Make sure correct overlay decal is positioned on Diagnostic ACE display.

4. Turn the key switch to the ON position, but do not start machine.

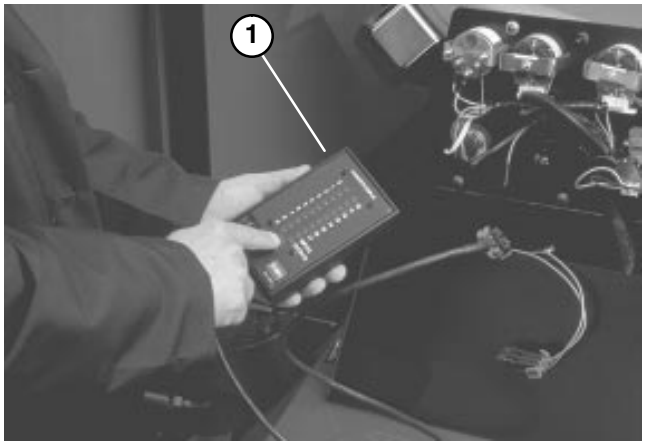

Figure 40

1. Diagnostic ACE

Note: The red text on the overlay decal refers to input switches and the green text refers to outputs.

5. The "inputs displayed" LED, on lower right column of the Diagnostic ACE, should be illuminated. If "outputs displayed" LED is illuminated, press the toggle button, on Diagnostic ACE, to change LED to "inputs displayed".

6. The Diagnostic ACE will illuminate the LED associated with each of the inputs when that input switch is closed.

Individually, change each of the switches from open to closed (i.e., sit on seat, engage traction pedal, etc.), and note that the appropriate LED on Diagnostic ACE will blink on and off when corresponding switch is closed. Repeat on each switch that is it possible to be changed by hand.

7. If switch is closed and appropriate LED does not turn on, check all wiring and connections to switch and/or check switches with an ohm meter. Replace any defective switches and repair any defective wiring.

The Diagnostic ACE also has the ability to detect which output solenoids or relays are turned on. This is a quick way to determine if a machine malfunction is electrical or hydraulic.

To verify output function:

1. Park machine on a level surface, lower the cutting units, stop the engine and engage the parking brake.

2. Open control panel cover. Locate wire harness and connectors near controller. Carefully unplug loopback connector from harness connector. Set HOC selector knob to position "A".

3. Connect the Diagnostic ACE connector to the harness connector. Make sure correct overlay decal is positioned on Diagnostic ACE.

4. Turn the key switch to the ON position, but do not start machine.

Note: The red text on the overlay decal refers to input switches and the green text refers to outputs.

5. The "outputs displayed" LED, on lower right column of Diagnostic ACE, should be illuminated. If "inputs displayed" LED is illuminated, press the toggle button, on Diagnostic ACE, to change LED to "outputs displayed".

Note: It may be necessary to toggle between "inputs displayed" and "outputs displayed" several times to do the following step. To toggle back and forth, press toggle button once. This may be done as often as required. DO NOT HOLD BUTTON.

6. Sit on the seat and attempt to operate the desired function of the machine. (If you need help verifying the correct input settings for each function, refer to the Logic Chart on page 24) The appropriate output LED's should illuminate to indicate that the ECU is turning on that function. (Refer to the list on page 25**,** or the logic chart to be certain of the specified output LED's.

Note: If any output LED is blinking, this indicates an electrical problem with that OUTPUT. Repair / replace defective electrical parts immediately. To reset a blinking LED, turn the key switch "OFF", then back "ON".

If no output LED's are blinking, but the correct output LED's do not illuminate, verify that the required input switches are in the necessary positions to allow that function to occur. Verify correct switch function.

If the output LED's are on as specified, but the machine does not function properly, this indicates a non–electrical problem. Repair as necessary.

Note: Due to electrical system constraints, the output LED's for "START", "PREHEAT" and "ETR/ALT" may not blink even though an electrical problem may exist for those functions. If the machine problem appears to be with one of these functions, be certain to check the electrical circuit with a volt / ohm meter to verify that no electrical problem exists to these functions.

If each output switch is in the correct position and functioning correctly, but the output LED's are not correctly illuminated, this indicates an ECU problem. If this occurs, contact your Toro Distributor for assistance.

IMPORTANT: The Diagnostic ACE display must not be left connected to the machine. It is not designed to withstand the environment of the machine's every day use. When done using Diagnostic ACE, disconnect it from the machine and reconnect loopback connector to harness connector. Machine will not operate without loopback connector installed on harness. Store Diagnostic ACE in dry, secure location in shop, not on machine.

HYDRAULIC VALVE SOLENOID FUNCTIONS

Use the list below to identify and describe the different functions of the solenoids in the hydraulic manifold. Each solenoid must be energized to allow function to occur.

Solenoid	Function
S1	Front reel circuit
S2	Rear reel circuit
S3	Lift / lower front wing cutting units
S4	Lift / lower center cutting unit
S5	Lift / lower rear cutting unit
S6	Lower any cutting units
S7	Lift any cutting units
S8,S9	Backlap any cutting units

OPERATING CHARACTERISTICS

Familiarization – Before mowing grass, practice operating machine in an open area. Start and stop the engine. Operate in forward and reverse. Lower and raise cutting units and engage and disengage reels. When you feel familiar with the machine, practice operating up and down slopes at different speeds.

The brakes can be used to assist in turning the machine. However, use them carefully, especially on soft or wet grass conditions because the turf may be torn accidentally. Individual turning brakes may also be used to help maintain traction. For example, in some slope conditions, the uphill wheel slips and loses traction. If this situation occurs, depress uphill turn pedal gradually and intermittently until the uphill wheel stops slipping, thus, increasing traction on the downhill wheel.

WARNING: When operating machine, always use the seat belt and ROPS together.

OPERATING INSTRUCTIONS

Warning System – If a warning light comes on during operation, stop the machine immediately and correct the problem before continuing operation. Serious damage could occur if the machine is operated with a malfunction.

Mowing – Start engine and move throttle to FAST so engine is running at maximum speed. Move the ENABLE / DISABLE switch to ENABLE and use the LOWER MOW / RAISE lever to control the cutting units (front cutting units are timed to lower before the rear cutting units). To move forward and cut grass, press traction pedal forward.

Transport – Move the ENABLE / DISABLE switch to joy stick DISABLE and raise the cutting units to the transport position. Be careful when driving between objects so you do not accidentally damage the machine or cutting units. Use extra care when operating machine on slopes. Drive slowly and avoid sharp turns on slopes to prevent roll overs. The cutting units should be lowered when going downhill for steering control.

LOGIC GRID

RM 5200–D
RM 5400–D

KEY: X=CLOSED, O=OPEN, P=OUTPUT ON,
M=MOMENTARILY CLOSED,
A=OUTPUT ON IF REELS WERE PREVIOUSLY RUNNING

TIMERS
T1= .5 sec
T2= 5.0 sec
T3= .9 sec
T4= .1 sec
T5= .9 sec
T6= 6 sec

ACTIONS	INPUTS: 0	1	2 Key Run	3 Traction Neutral	4 Seat Switch	5 High Coolant Temp	6	7 Raise	8 Enable Reels	9 Front Units Down	10 Backlap Front	11 Backlap Rear	12 Lower / Mow	13	14	15	16	17	AØ Start Key	A1	T Timer Involved	OUTPUTS: 0 Diagnostic Light	1 S8,S9	2 S2	3 S3	4 S4	5 S5	6 S6	7 ETR Hold / Alt	10 S1	11 S7	12 Start	13 Preheat
0) Controller OK			X																			P										
1) Preheat			X																		T6	P										P
2) Start				X				O	O				O						X			P									P	P
3) Run (No operator)			X	X		O																P							P			
Run (with operator)			X	O	X	O																P							P			
4) Lower (To turn around)			X					O	O	O	O	O	X									P			P			P				
Lower (All units when disabled)			X					O	O	X	O	O	X									P			P	P	P	P				
Lower (All units when enabled)			X		X			O	X	O	O	O	X									P			P	P		P				
Lower / Mow–Front			X		X			O	X	X	O	O	M								T1	P			P	P		P	P			
Lower / Mow–Front & Rear			X		X			O	X	X	O	O	X								T2	P		P	P	P	P	P	P			
5) Mow			X		X			O	X	X	O	O	M									P		P					P			
6) Raise (transport)			X					X	O		O	O	O									P			P	P	P			P		
Raise (To turn around front)			X		X			M	X	X	O	O	O								T3	P		A	P	P				P		
Raise (To turn around front & rear)			X		X			X	X	X	O	O	O									P			P	P	P				P		
Raise (To turn around front & rear)			X		X			X	X	O	O	O	O								T5	P				P	P				P		
7) Backlap Front			X	X				O	X	X	X	O	M								T2	P	P		P	P	P	P	P			
			X	X				O	X	X	X	O										P	P						P			
8) Backlap Rear			X	X				O	X	X	O	X	M								T2	P	P	P	P	P	P	P				
			X	X				O	X	X	O	X										P	P	P								

LUBRICATION

CAUTION

Before servicing or making adjustments to the machine, stop engine and remove key from the switch. Lower cutting units to the ground.

GREASING BEARINGS AND BUSHINGS

(Fig. 37 – 44)

The machine has grease fittings that must be lubricated regularly with No. 2 General Purpose Lithium Base Grease. If machine is operated under normal conditions, lubricate all bearings and bushings after every 50 hours of operation. Lubricate bearings and bushings immediately after every washing, regardless of the interval listed.

1. The grease fitting locations and quantities are: Engine Drive shaft (3), (Fig. 37); Cutting unit carrier frame and pivot (2 ea.), (Fig. 38); Lift arm pivots (5), Drive shaft clutch (1) (Fig. 39); Rear axle tie rod (2), Steering cylinder ball joints (2), Rear axle pivot (1) (Fig. 40); Traction control linkage at transmission (1), Drive shaft support bearing (1), Rear axle drive shaft (3) (Fig. 41); Brake pedal (1) (Fig. 42); Lift cylinders (5) (Fig. 43) and Fan shaft (Fig. 44).

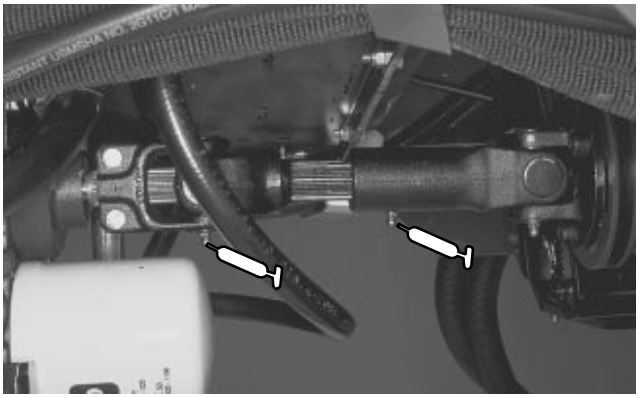

Figure 37

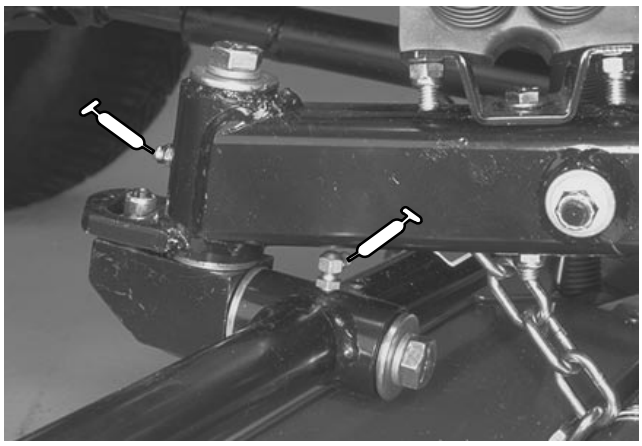

Figure 38

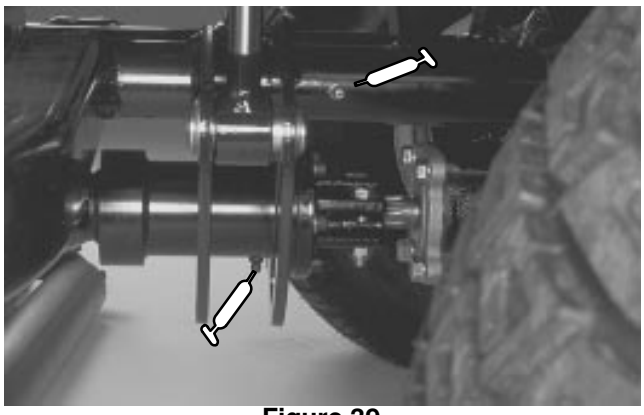

Figure 39

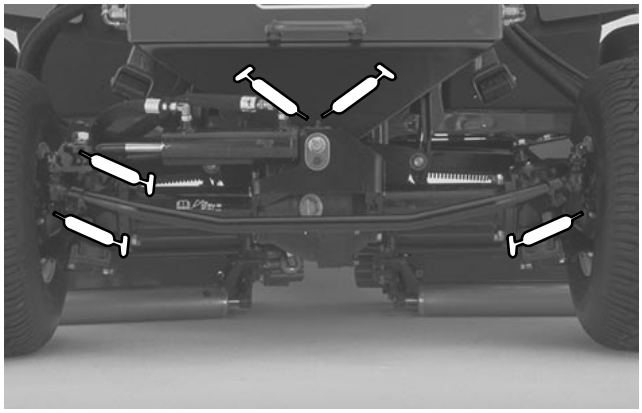

Figure 40

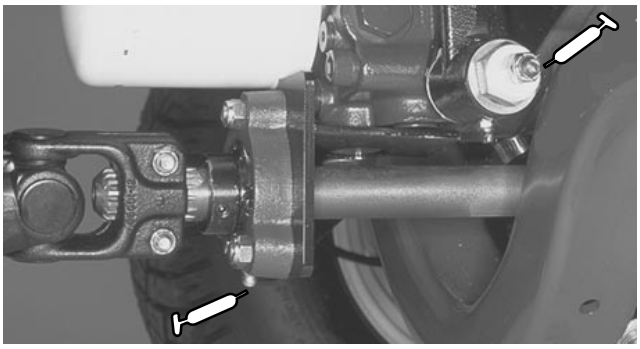

Figure 41



Figure 42

LUBRICATION

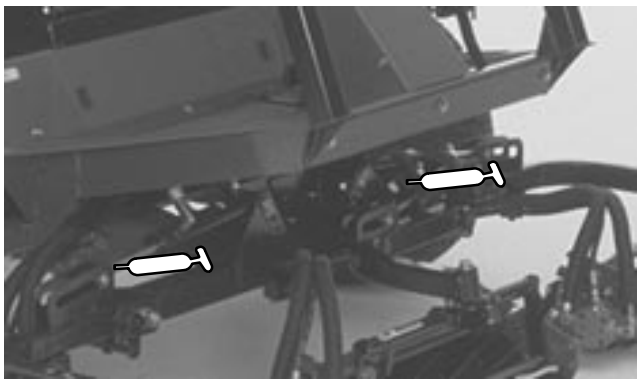

Figure 43

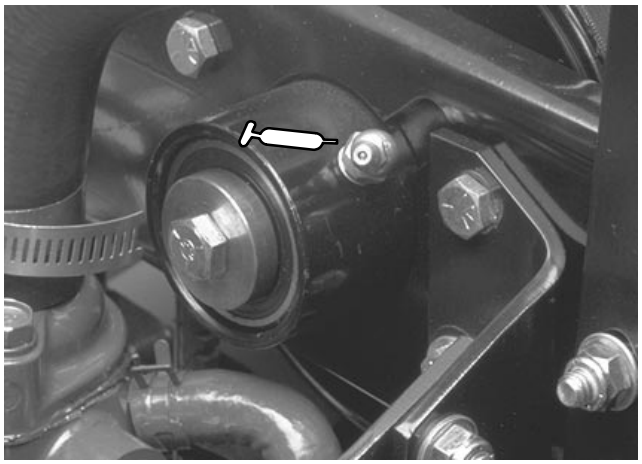

Figure 44

SERVICE INTERVAL CHART

REELMASTER 5200-D/5400-D
QUICK REFERENCE AID

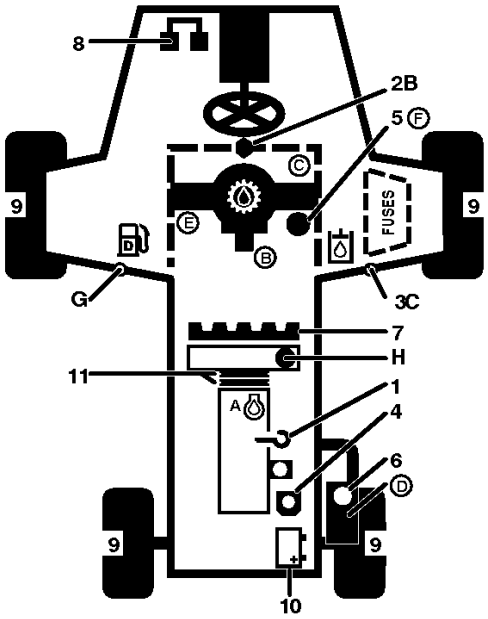

CHECK/SERVICE (daily)

1. OIL LEVEL, ENGINE
2. OIL LEVEL, TRANSMISSION
3. OIL LEVEL, HYDRAULIC TANK
4. COOLANT LEVEL, RADIATOR
5. FUEL /WATER SEPARATOR
6. PRECLEANER -- AIR CLEANER
7. RADIATOR SCREEN
8. BRAKE FUNCTION
9. TIRE PRESSURE
10. BATTERY
11. BELTS (FAN, ALT.)

GREASING -- SEE OPERATOR'S MANUAL

FLUID SPECIFICATIONS/CHANGE INTERVALS

SEE OPERATOR'S MANUAL FOR INITIAL CHANGES.	FLUID TYPE	CAPACITY	CHANGE INTERVAL		FILTER PART NO.
			FLUID	FILTER	
A. ENGINE OIL	SAE 10W-30	4.0 QTS.	50 HRS.	100 HRS.	98-9651
B. TRANSMISSION OIL	MOBIL 424	5 QTS.*	800 HRS.	800 HRS.	75-1330
C. HYD. CIRCUIT OIL	MOBIL 424	8.5 GALS.*	800 HRS.	SEE INDICATOR	75-1310
D. AIR CLEANER				400 HRS.	98-9763
E. FILTER, IN-LINE FUEL				400 HRS.	98-7612
F. WATER SEPARATOR				400 HRS.	98-9764
G. FUEL TANK	NO. 2-Diesel	10 GALS.	Drain and flush, 2 yrs.		
H. COOLANT	50/50 Ethylene glycol/water	9.6 QTS.	Drain and flush, 2 yrs.		

* INCLUDING FILTER

† REELMASTER 5200-D
†† REELMASTER 5400-D

98-9340

DAILY MAINTENANCE CHART AND CHECKLIST

Daily Maintenance: (duplicate this page for routine use)
Check proper section of Operator's Manual for fluid specifications

Maintenance Check Item ➧	Daily Maintenance Check For Week Of _____						
	MON	TUES	WED	THURS	FRI	SAT	SUN
✓ Safety Interlock Operation							
✓ Brake Operation							
✓ Engine Oil & Fuel Level							
✓ Cooling System Fluid Level							
Drain Water/Fuel Separator							
✓ Air Filter Restriction Indicator							
✓ Radiator and Screen for Debris							
✓ Unusual Engine Noises[1]							
✓ Unusual Operating Noises							
✓ Transmission Oil Level							
✓ Hydraulic System Oil Level							
✓ Hydraulic Filter Indicator[2]							
✓ Hydraulic Hoses for Damage							
✓ Fluid Leaks							
✓ Tire Pressure							
✓ Instrument Operations							
✓ Reel–to–Bedknife Adjustment							
✓ Height–of–Cut Adjustment							
✓ Cutting Units Shear Pin							
Lubricate All Grease Fittings[3]							
Touch–up Damaged Paint							

[1] = Check glow plugs and injector nozzles, if excess smoke or rough running is noted.
[2] = Check with engine running and oil at operating temperature.
[3] = Immediately after every washing, regardless of the interval listed.

Notation for areas of concern: Inspection performed by_____

Item	Date	Information
1		
2		
3		
4		
5		
6		
7		
8		

AIR CLEANER MAINTENANCE

CAUTION

Before servicing or making adjustments to the machine, stop engine and remove key from the switch. Lower cutting units to the ground.

GENERAL AIR CLEANER MAINTENANCE

1. Check air cleaner body for damage which could possibly cause an air leak. Replace a damaged air cleaner body.

2. Service the air cleaner filters when ever air cleaner indicator (Fig. 45) shows red or every 400 hours (more frequently in extreme dusty or dirty conditions). Do not over service air filter.

3. Be sure cover is sealing around air cleaner body.

SERVICING PRECLEANER BOWL (Fig. 45)

Normally, inspect precleaner bowl daily. When conditions are extremely dusty and dirty, inspect more frequently. Do not let dust or debris build up above level marks on precleaner bowl.

1. Remove thumb screw, separate cover from precleaner bowl.

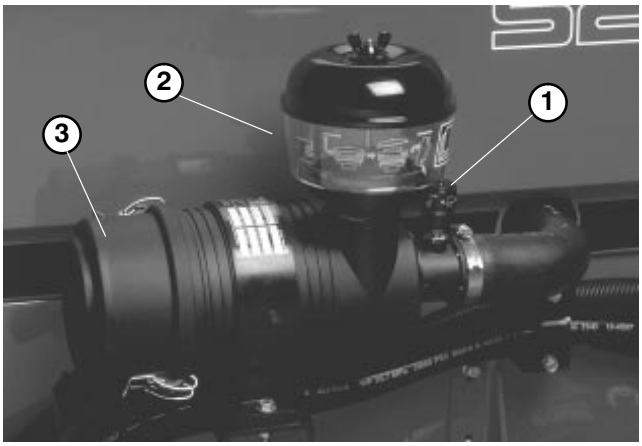

Figure 45

1. Air Cleaner Indicator
2. Pre Cleaner Bowl
3. Dust Cup

2. Empty precleaner bowl and wipe clean.

3. Assemble and install precleaner bowl, cover and thumb screw.

Note: When operating machine in extremely dusty conditions, an optional extension tube (Toro Part No. 43−3810), which raises precleaner bowl above hood, thus, lengthening the time between precleaner bowl servicing, is available from your local authorized Toro Distributor.

SERVICING AIR CLEANER (Fig. 46)

1. Release latches securing air cleaner cover to air cleaner body. Separate cover from body. Clean inside of air cleaner cover.

2. Gently slide filter element out of air cleaner body to reduce the amount of dust dislodged. Avoid knocking filter against air cleaner body.

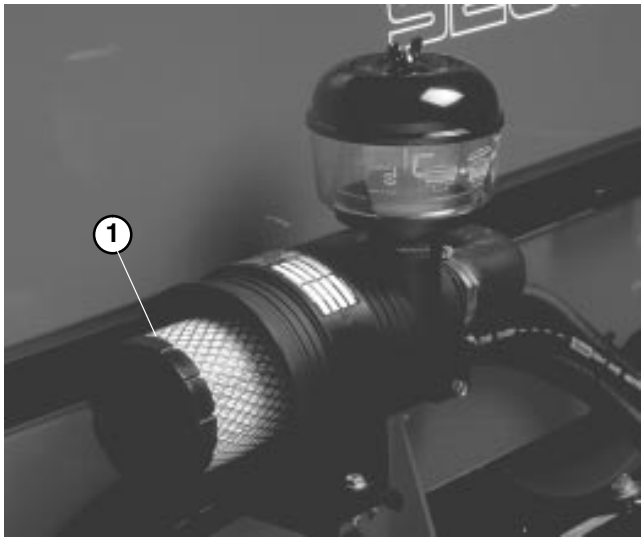

Figure 46

1. Filter Element

3. Inspect filter element and discard if damaged. Do not wash or reuse a damaged filter.

Washing Method

A. Prepare a solution of filter cleaner and water and soak filter element about 15 minutes. Refer to directions on filter cleaner carton for complete information.

B. After soaking filter for 15 minutes, rinse it with clear water. Maximum water pressure must not exceed 40 psi to prevent damage to the filter element. Rinse filter from clean side to dirty to side.

C. Dry filter element using warm, flowing air (160°F) max), or allow element to air−dry. Do not use a light bulb to dry the filter element because damage could result.

Compressed Air Method

A. Blow compressed air from inside to the outside of dry filter element. Do not exceed 100 psi to prevent damage to the element.

B. Keep air hose nozzle at least 2” from filter and move nozzle up and down while rotating the filter element. Inspect for holes and tears by looking through the filter toward a bright light.

5. Inspect new filter for shipping damage. Check sealing end of filter. Do not install a damaged filter.

6. Insert new filter properly into air cleaner body. Make sure filter is sealed properly by applying pressure to outer rim of filter when installing. Do not press on flexible center of filter.

7. Reinstall cover and secure latches.

8. Reset indicator (Fig. 45) if showing red.

ENGINE MAINTENANCE

CAUTION

Before servicing or making adjustments to the machine, stop engine and remove key from the switch. Lower cutting units to the ground.

ENGINE OIL AND FILTER (Fig. 47 & 48)

Change oil and filter initially after the first 50 hours of operation, thereafter change oil every 50 hours and filter every 100 hours.

1. Remove drain plug and let oil flow into drain pan. When oil stops, install drain plug.

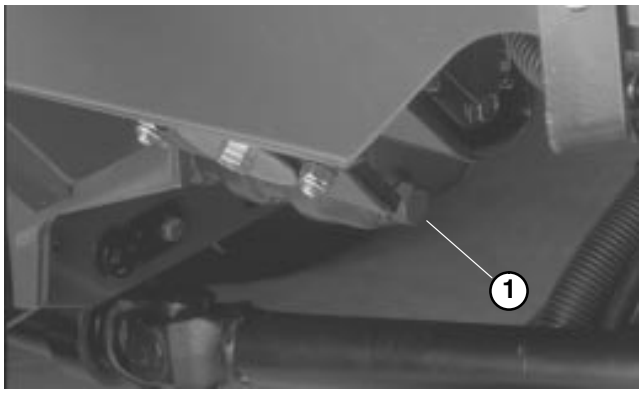

Figure 47
1. Engine Oil Drain Plug

2. Remove oil filter. Apply a light coat of clean oil to the new filter seal before screwing it on. DO NOT OVER−TIGHTEN.



Figure 48
1. Engine Oil Filter

3. Add oil to crankcase, refer to Check Engine Oil.

FUEL SYSTEM

Fuel Tank

Drain and clean fuel tank every 2 years. Also, drain and clean tank if fuel system becomes contaminated or if machine is to be stored for an extended period. Use clean fuel to flush out the tank.

Fuel Lines and Connections

Check lines and connections every 400 hours or yearly, whichever comes first. Inspect for deterioration, damage, or loose connections.

Fuel Filter / Water Separator

Drain water or other contaminants from fuel filter / water separator (Fig. 49) daily.

1. Locate fuel filter, under hydraulic tank, and place a clean container under it.

2. Loosen drain plug on bottom of filter canister. Tighten plug after draining.

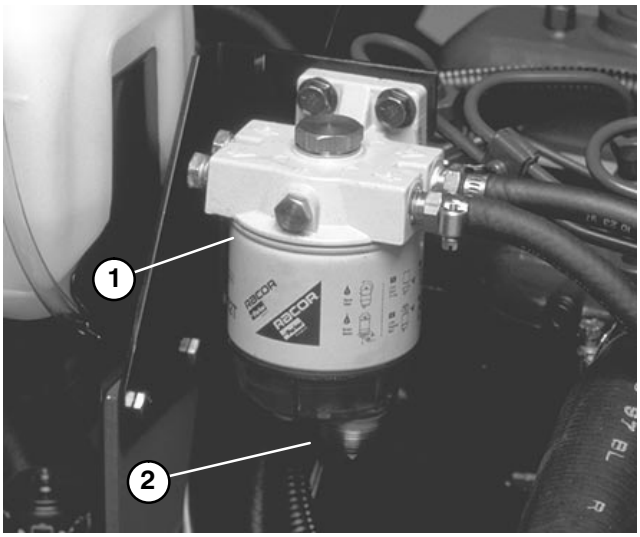

Figure 49
1. Fuel Filter / Water Separator
2. Drain Plug

Replace filter canister after every 400 hours of operation.

1. Clean area where filter canister mounts.

2. Remove filter canister and clean mounting surface.

3. Lubricate gasket on filter canister with clean oil.

4. Install filter canister by hand until gasket contacts mounting surface, then rotate an additional 1/2 turn.

REPLACING FUEL FILTER (Fig. 50)

Replace the fuel filter after every 400 operating hours or yearly, whichever occurs first.

1. Clean area where filter bowl mounts.

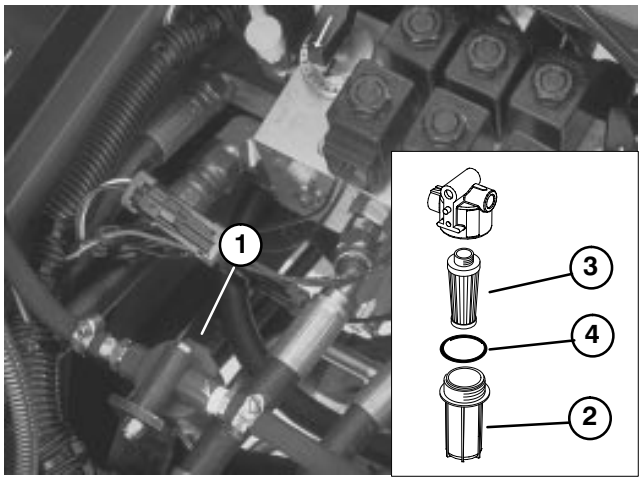

Figure 50

1. Fuel filter assembly
2. Filter bowl
3. Filter
4. O−ring

2. Remove the filter bowl and clean mounting surface.

3. Remove filter from bowl and replace with new filter.

4. Install filter bowl by hand until O−ring contacts mounting surface.

BLEEDING AIR FROM INJECTORS (Fig. 51)

Note: This procedure should be used only if fuel system has been purged of air through normal priming procedures and engine will not start; refer to Bleeding Fuel System.

1. Loosen the pipe connection to the No. 1 nozzle and holder assembly.

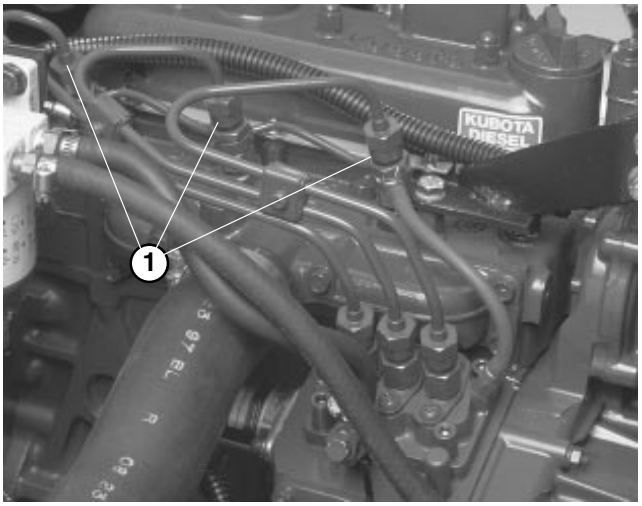

Figure 51

1. Fuel Injectors (3)

2. Move throttle to FAST position.

3. Turn key in key switch to START position and watch fuel flow around connector. Turn key to OFF position when solid flow is observed.

4. Tighten pipe connector securely.

5. Repeat steps on remaining nozzles.

ENGINE COOLING SYSTEM (Fig. 52 & 53)

1. Removing Debris − Remove debris from screen, oil coolers and radiator daily, clean more frequently in dirty conditions.

A. Turn engine off and raise hood. Clean engine area thoroughly of all debris.

B. Loosen clamps and pull up on screen to slide it out of mounting tracks. Clean screen thoroughly with water or compressed air.

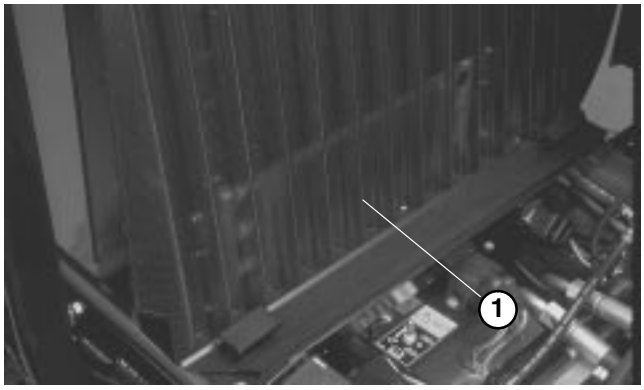

Figure 52

1. Screen

C. Slightly raise oil coolers and pivot forward. Clean both sides of oil coolers and radiator area thoroughly with water or compressed air. Pivot oil coolers back into position.

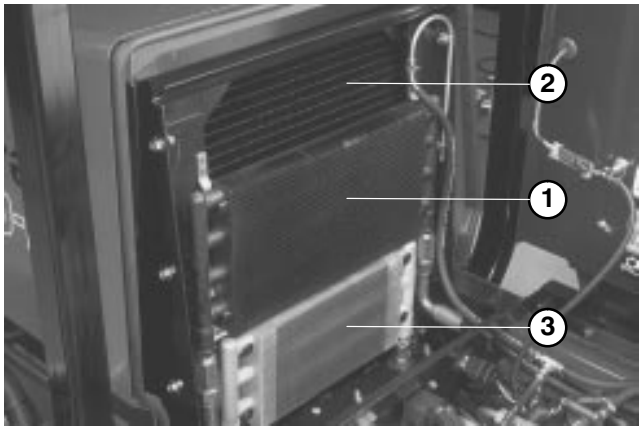

Figure 53

1. Reel Oil Cooler
2. Radiator
3. Transmission Oil Cooler

D. Install screen and close hood.

SERVICING ENGINE BELTS

Check condition and tension of all belts after first day of operation and every 100 operating hours thereafter.

Alternator Belt (Fig. 54)

To Check Tension:

1. Open hood.

2. Check tension by depressing belt midway between alternator and crankshaft pulleys with 22 lb. of force. Belt should deflect 7/16 in. If deflection is incorrect, proceed to step 3. If correct, continue operation.

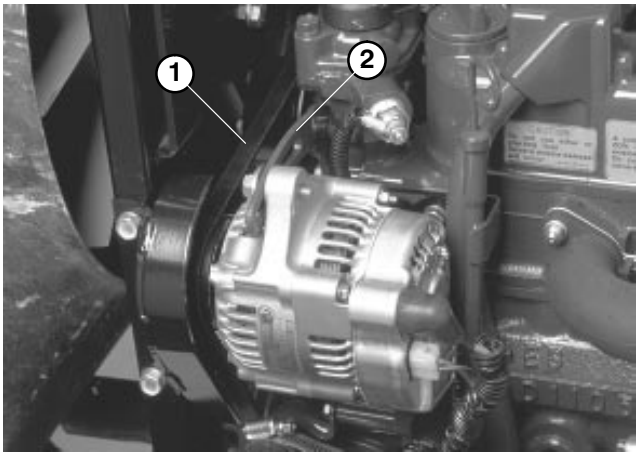

Figure 54
1. Alternator Belt
2. Brace

3. Loosen bolt securing brace to engine and bolt securing alternator to brace.

4. Insert pry bar between alternator and engine and pry out on alternator.

5. When proper tension is achieved, tighten alternator and brace bolts to secure adjustment.

Cooling Fan Belt (Fig. 55)

1. Loosen lock nut on belt tensioner lever.

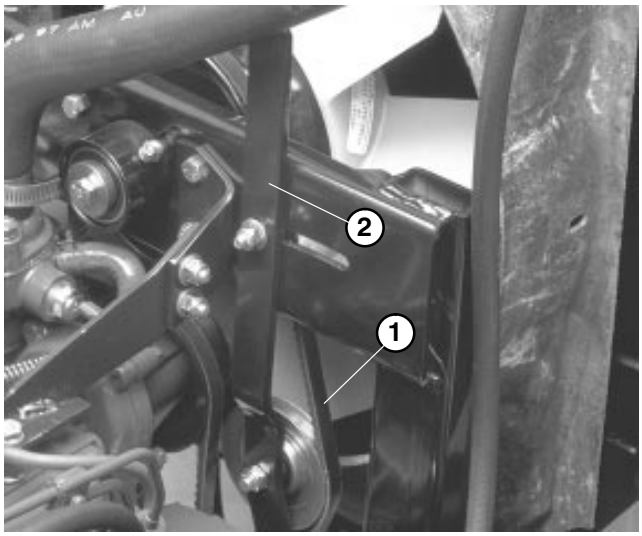

Figure 55
1. Cooling Fan Belt 2. Tensioner Lever

2. Apply 5 –10 lb. of force at end of lever to set the proper tension on the fan belt.

3. Tighten lock nut to secure adjustment.

ADJUSTING THROTTLE (Fig. 56)

1. Position throttle lever forward so it stops against seat base slot.

2. Loosen the throttle cable connector on the lever arm at the injection pump.

3. Hold the injection pump lever arm against the high idle stop and tighten the cable connector.

Note: When tightened, the cable connector must be free to swivel.

4. Torque the lock nut, used to set the friction device on the throttle lever, to 40 – 55 in. lb. The maximum force required to operate the throttle lever should be 20 lb.

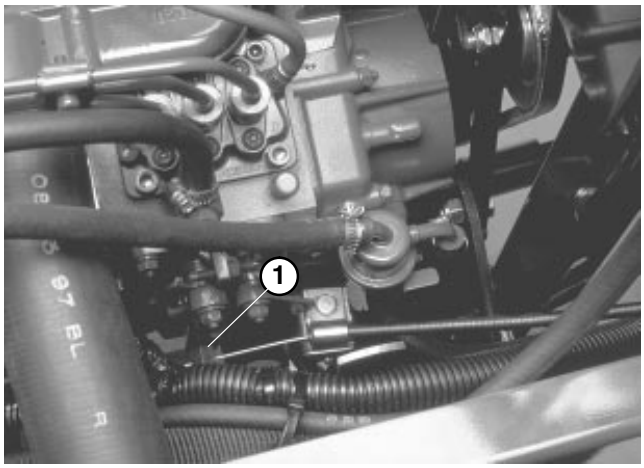

Figure 56
1. Injection Pump Lever Arm

HYDRAULIC MAINTENANCE

CAUTION

Before servicing or making adjustments to the machine, stop engine and remove key from the switch. Lower cutting units to the ground.

CHANGING HYDRAULIC FLUID (Fig. 57)

Change hydraulic fluid after every 800 operating hours, in normal conditions. If fluid becomes contaminated, contact your local TORO distributor because the system must be flushed. Contaminated fluid looks milky or black when compared to clean oil.

1. Turn engine off and raise hood.

2. Remove drain plug from bottom of reservoir and let hydraulic fluid flow into drain pan. Reinstall and tighten plug when hydraulic fluid stops draining.

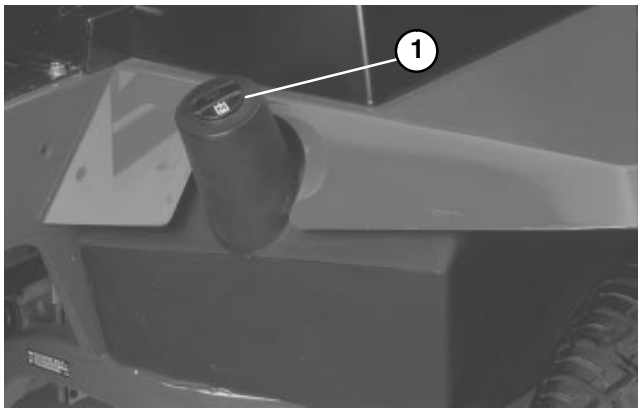

Figure 57
1. Hydraulic Reservoir

3. Fill reservoir with approximately 8.5 gallons of hydraulic fluid. Refer to Checking Hydraulic Fluid.

IMPORTANT: Use only hydraulic fluids specified. Other fluids could cause system damage.

4. Install reservoir cap. Start engine and use all hydraulic controls to distribute hydraulic fluid throughout the system. Also check for leaks. Then stop the engine.

5. Check level of fluid and add enough to raise level to FULL mark on dipstick. DO NOT OVER FILL.

REPLACING HYDRAULIC FILTER (Fig. 58)

The hydraulic system filter head is equipped with a service interval indicator. With the engine running, view the indicator, it should be in the GREEN zone. When the indicator is in the RED zone, the filter element should be changed.

Use the Toro replacement filter (Part No. 75−1310).

IMPORTANT: Use of any other filter may void the warranty on some components.

1. Position machine on a level surface, lower the cutting units, stop the engine, engage the parking brakes and remove key from ignition switch.

2. Clean area around filter mounting area. Place drain pan under filter and remove filter.

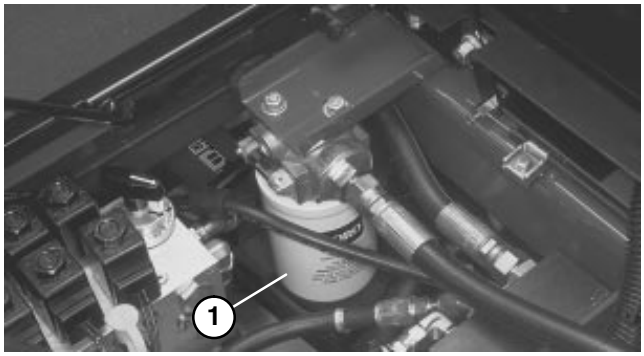

Figure 58
1. Hydraulic Filter

3. Lubricate new filter gasket and fill the filter with hydraulic fluid.

4. Assure filter mounting area is clean. Screw filter on until gasket contacts mounting plate. Then tighten filter one−half turn.

5. Start engine and let run for about two minutes to purge air from the system. Stop the engine and check for leaks.

CHECKING HYDRAULIC LINES AND HOSES

Daily, check hydraulic lines and hoses for leaks, kinked lines, loose mounting supports, wear, loose fittings, weather deterioration and chemical deterioration. Make all necessary repairs before operating.

WARNING

Keep body and hands away from pin hole leaks or nozzles that eject high pressure hydraulic fluid. Use cardboard or paper to find hydraulic leaks. Hydraulic fluid escaping under pressure can penetrate skin and cause injury. Fluid accidentally injected into the skin must be surgically removed within a few hours by a doctor familiar with this form of injury or gangrene may result.

HYDRAULIC SYSTEM TEST PORTS (Fig. 59)

The test ports are used to test pressure in the hydraulic circuits. Contact your local Toro distributor for assistance.

1. Test Port #1 is used to assist in trouble shooting the hydraulic circuit for the front cutting units and lift cylinders.

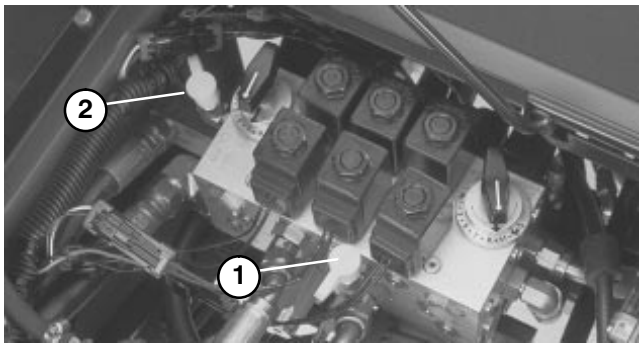

Figure 59

1. Test Port #1
2. Test Port #2
3. Test Port #3 (Not Shown)

2. Test Port #2 is used to assist in trouble shooting the hydraulic circuit for the rear cutting units.

3. Test Port #3 is located on the rear of the hydrostatic transmission and is used to measure the charge pressure of the transmission.

ADJUSTING TRACTION DRIVE FOR NEUTRAL (Fig. 60)

The machine must not creep when traction pedal is released. If it does creep, an adjustment is required.

1. Park machine on a level surface, shut engine off and lower cutting units to the floor. Depress only the right brake pedal and engage the parking brake.

2. Jack up left side of machine until front tire is off the shop floor. Support machine with jack stands to prevent it from falling accidentally.

NOTE: On 4 wheel drive models, left rear tire must also be off the shop floor or 4 wheel drive driveshaft must be removed.

3. Under right side of machine, loosen locknut on traction adjustment cam.

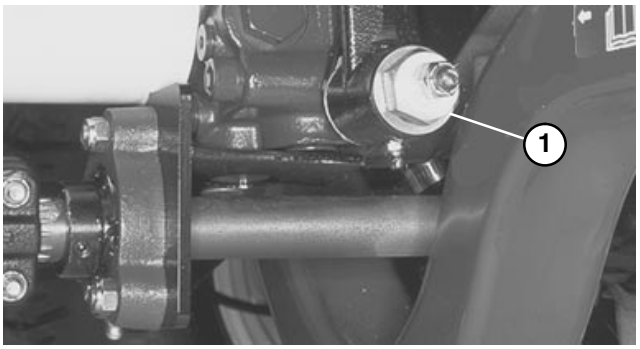

Figure 60

1. Traction Adjustment Cam

WARNING

Engine must be running so final adjustment of the traction adjustment cam can be performed. To guard against possible personal injury, keep hands, feet, face and other parts of the body away from the muffler, other hot parts of the engine, and other rotating parts.

4. Start engine and rotate cam hex in either direction until wheel ceases rotation.

5. Tighten locknut securing adjustment.

6. Stop the engine and release the right brake. Remove jack stands and lower the machine to the shop floor. Test drive the machine to make sure it does not creep.

ADJUSTING CUTTING UNIT LIFT RATE (Fig. 61 – 63)

The cutting unit lift circuit is equipped with (3) adjustable valves used to ensure the cutting units do not raise too quickly and bang against lift stops. Adjust cutting units as follows:

Center Cutting Unit

1. Locate valve behind access panel above operator's platform.

2. Loosen setscrew on valve and rotate valve approximately 1/2 turn clockwise.

3. Verify lift rate adjustment by raising and lowering cutting unit several times. Readjust as required.

4. After desired lift rate is attained, tighten setscrew to lock adjustment.

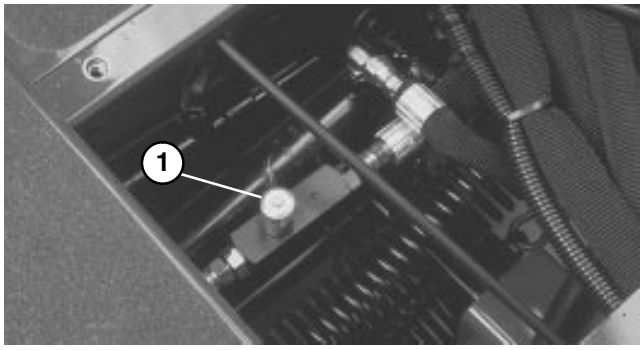

Figure 61

1. Center cutting unit adjustment valve

Outside Front Cutting Units

1. Locate valve on left front lift cylinder (under foot rest).

2. Loosen setscrew on valve. Rotate valve 1/2 turn clockwise.

3. Verify lift rate adjustment by raising and lowering cutting units several times. Readjust as required.

4. After desired lift rate is attained, tighten set screw to lock adjustment.

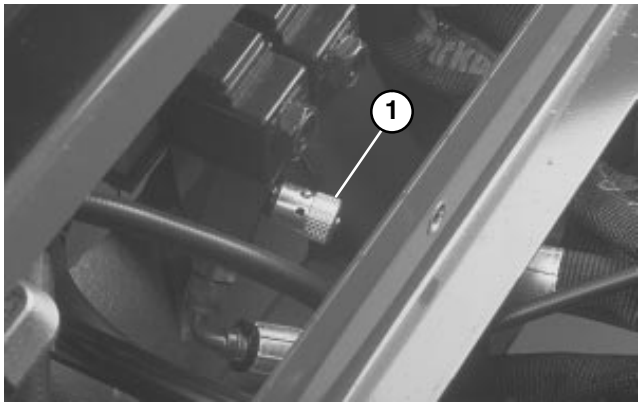

Figure 62

1. Outside front cutting units adjustment valve

Rear Cutting Units

1. Raise hood and locate valve on left rear side of machine.

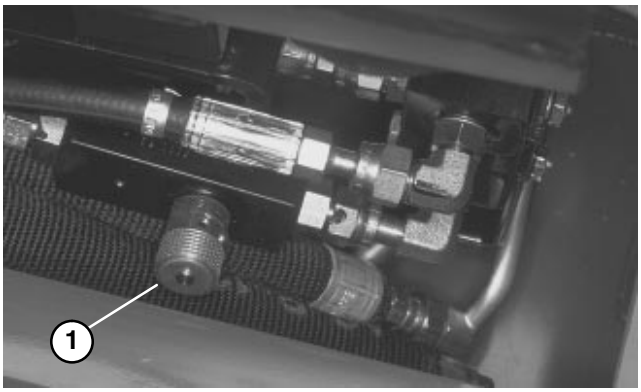

Figure 63

1. Rear cutting units adjustment valve

2. Loosen setscrew on valve and rotate valve approximately 1/2 turn clockwise.

3. Verify lift rate adjustment by raising and lowering cutting units several times. Readjust as required.

4. After desired lift rate is attained, tighten setscrew to lock adjustment.

CHECKING AND ADJUSTING TRACTION LINKAGE (Fig. 64)

Due to normal wear in the control linkage and hydrostatic transmission, an increased amount of force may be required to return the transmissions to neutral. Periodically check the machine.

To Check Traction Linkage

1. On a large, flat open area, drive the machine at full throttle and full traction speed.

2. Remove foot from traction pedal and measure the distance required for the machine to come to a stop.

3. If the distance required to stop is greater than 18 feet (5.5 meters) an adjustment to the traction linkage is required. Proceed to next step.

To Adjust Traction Linkage

1. Park machine on a level surface, lower cutting units to the floor and shut engine off.

2. Connect brake pedals together with locking pin, push both pedals down and pull parking brake latch out.

3. Loosen outer hex nut securing eye bolt to spring anchor plate.

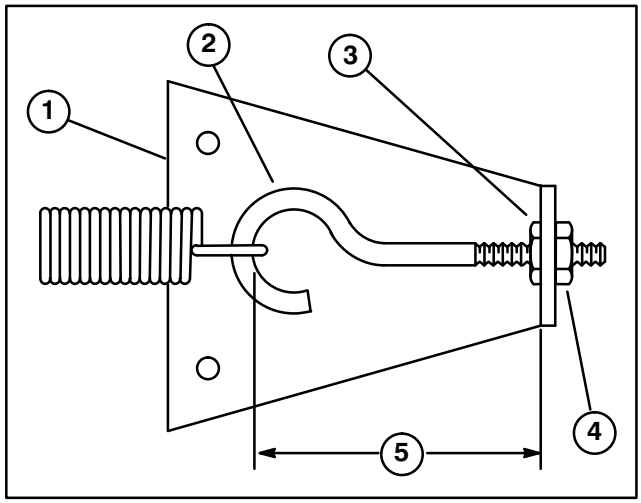

Figure 64

1. Spring Anchor Plate
2. Eye bolt
3. Inner locknut
4. Outer locknut
5. Shorten distance to decrease time required to stop machine

4. Rotate, clockwise, until distance between inside of eye bolt loop and inside of spring anchor plate is shortened 1/8”, as shown in figure 69. Tighten hex nut.

5. Operate the machine and check stopping distance. Repeat procedure if required.

Note: Shortening the distance between inside of eye bolt loop and inside of spring anchor plate increases the pedal force on the traction pedal. Therefore, do not over adjust.

BRAKE MAINTENANCE

CAUTION

Before servicing or making adjustments to the machine, stop engine and remove key from the switch. Lower cutting units to the ground.

ADJUSTING SERVICE BRAKES (Fig. 65)

Adjust the service brakes when there is more than 1 inch of "free travel" of the brake pedal, or when the brakes do not work effectively. Free travel is the distance the brake pedal moves before braking resistance is felt.

1. Disengage locking pin from brake pedals so both pedals work independently of each other.

2. To reduce free travel of brake pedals, tighten the brakes – loosen front nut on threaded end of brake cable. Then tighten rear nut to move cable backward until brake pedals have 1/2 to 1 inch of free travel. Tighten front nuts after brakes are adjusted correctly.

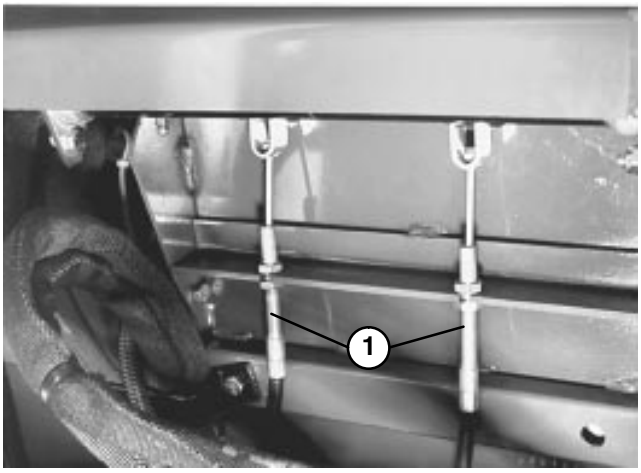

Figure 65
1. Brake Cables

AXLE MAINTENANCE

CAUTION

Before servicing or making adjustments to the machine, stop engine and remove key from the switch. Lower cutting units to the ground.

CHANGING TRANSMISSION FLUID (Fig. 66)

Change the transmission fluid after every 800 hours of operation, in normal conditions.

1. Position machine on a level surface, lower the cutting units, stop the engine, engage the parking brakes and remove key from ignition switch.

2. Clean area around suction line on bottom of transmission. Place drain pan under line.

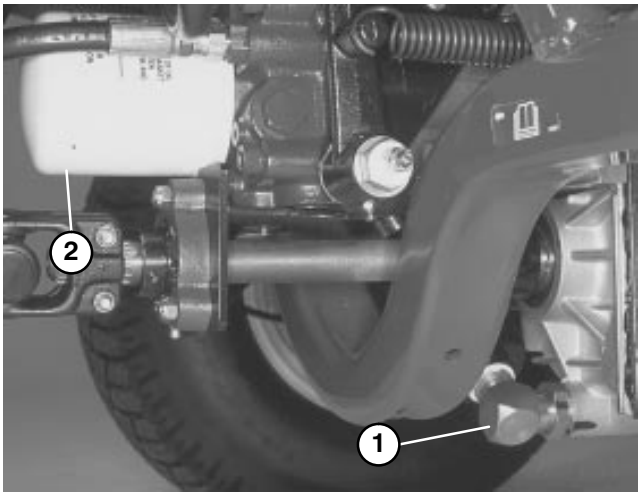

Figure 66
1. Transmission Suction Line
2. Transmission Oil Filter

3. Remove line from transmission allowing fluid to drain into drain pan.

4. Reinstall suction line to transmission.

5. Fill with oil; refer to Check Transmission Fluid.

6. Before starting the engine after changing transmission fluid, disconnect the run (ETR) solenoid on the engine, and crank the engine several times for 15 seconds. This allows the charge pump to fill the transmission with fluid before the engine is started.

REPLACING TRANSMISSION FILTER (Fig. 66)

Change the transmission filter after the first 10 hours of operation and every 800 hours, thereafter.

Only the Toro replacement filter (Part No.75−1330) can be used in the hydraulic system.

IMPORTANT: Use of any other filter may void the warranty on some components.

1. Position machine on a level surface, lower the cutting units, stop the engine, engage the parking brakes and remove key from ignition switch.

2. Clean area around filter mounting area. Place drain pan under filter and remove filter.

3. Lubricate new filter gasket and fill the filter with hydraulic oil.

4. Assure filter mounting area is clean. Screw filter on until gasket contacts mounting plate. Then tighten filter one−half turn.

5. Start engine and let run for about two minutes to purge air from the system. Stop the engine and check for leaks. Check fluid level and replenish if necessary.

CHANGING REAR AXLE LUBRICANT (Fig. 67) (Models 03541 & 03544 only)

After every 800 hours of operation the oil in the rear axle must be changed.

1. Position machine on a level surface.

2. Clean area around the (3) drain plugs, (1) on each end and (1) in the center.

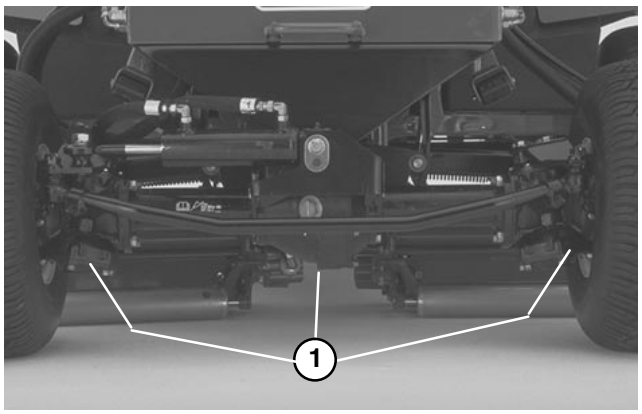

Figure 67
1. Drain Plugs (3)

3. Remove plugs allowing oil to drain into drain pans.

4. After oil is drained, apply thread locking compound on drain plug threads and reinstall in axle.

5. Fill axle with lubricant; refer to Check Rear Axle Lubricant, page 17.

REAR WHEEL TOE−IN (Fig. 68)

After every 800 operating hours or annually, check rear wheel toe−in.

1. Measure center−to−center distance (at axle height) at front and rear of steering tires. Front measurement must be 1/8 in. less than rear measurement.

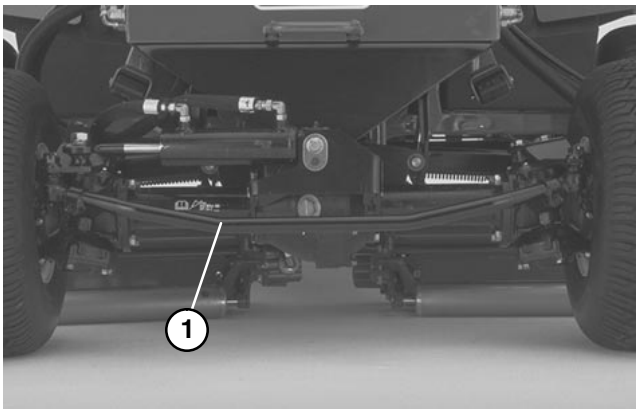

Figure 68
1. Tie Rod(s)

2. To adjust**,** loosen clamps at both ends of tie rod.

3. Rotate tie rod(s) to move front of tire inward or outward.

4. Tighten tie rod clamps when adjustment is correct.

ELECTRICAL MAINTENANCE

BATTERY CARE

IMPORTANT: Before welding on the machine, disconnect both cables from the battery, disconnect both wire harness plugs from the electronic control unit and the terminal connector from the alternator to prevent damage to the electrical system.

CAUTION

Wear safety goggles and rubber gloves when working with electrolyte. Charge the battery in a well ventilated so gases produced while charging can dissipate. Since the gases are explosive, keep open flame and electrical spark away from the battery; do not smoke. Nausea may result if the gases are inhaled. Unplug charger from electrical outlet before connecting to, or disconnecting charger leads from battery posts.

Note: Check battery condition weekly or after every 50 hours of operation. Keep terminals and entire battery case clean because a dirty battery will discharge slowly. To clean the battery, wash the entire case with solution of baking soda and water. Rinse with clear water. Coat the battery posts and cable connectors with Grafo 112X (skin−over) grease (Toro Part No. 505-47) or petroleum jelly to prevent corrosion.

FUSES (Fig. 69)

There are 4 fuses in the machines electrical system. They are located below control panel.



Figure 69

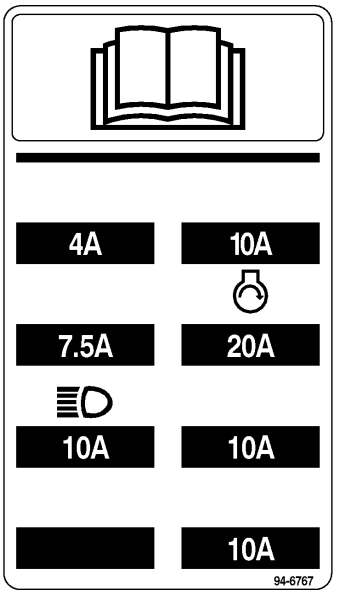

OPTIONAL LIGHTING

IMPORTANT: If optional lighting is be added to the traction unit, use the following schematic and part numbers to prevent damage to the traction units electrical system.

SCHEMATIC FOR OPTIONAL LIGHTING

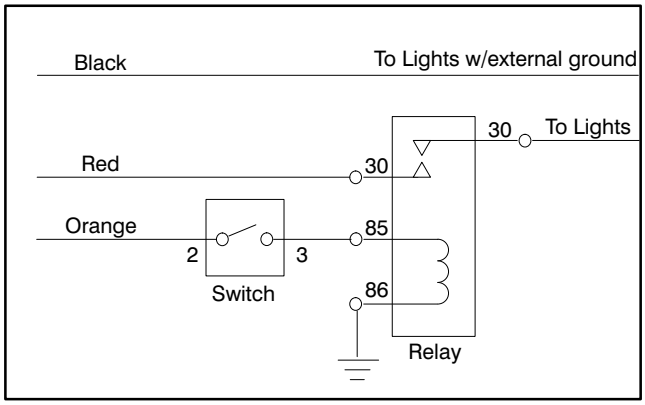

Switch*
Toro Part No. 75−1010
Honeywell Part No. 1TL1−2

Relay
Toro Part No. 70−1480
Bosch Part No. 0−332−204

Black, red and orange wires are located in control console.

Add 10 Amp fuse to fuse block at location shown

*** Punch out in control panel provided for switch installation**

CUTTING UNIT MAINTENANCE

BACKLAPPING

DANGER

REELS MAY STALL WHILE BACKLAPPING. DO NOT ATTEMPT TO RESTART REELS BY HAND OR TOUCH REELS WHILE BACKLAPPING. STOP ENGINE AND TURN H.O.C. KNOB ONE POSITION TOWARD "A".

Note: When backlapping, the front units all operate together, and the rear units operate together.

1. Position the machine on a level surface, lower the cutting units, stop the engine, engage the parking brake, and move the Enable/Disable switch to disable position.

2. Unlock and raise the seat to expose controls.

3. Make initial reel to bedknife adjustments appropriate for backlapping on all cutting units which are to be backlapped.

4. Start engine and run at idle speed.

DANGER: To avoid personal injury, never place hands or feet in reel area while engine is running. Changing engine speed while backlapping may cause reels to stall. Never change engine speed while backlapping. Only backlap at idle engine speed. Never attempt to turn reels by hand or foot while engine is running.

5. Set both reel speed controls to position 11. Select either front or rear on backlap switch to determine which units to backlap.

DANGER: To avoid personal injury, be certain that you are clear of the cutting units before proceeding.

6. Move Enable/Disable switch to Enable position. Move Lower Mow / Lift control forward to start back−lapping operation on designated reels.

7. For the cutting units being backlapped, move the reel speed control to position 1.

8. Apply lapping compound with the long handle brush supplied with machine. Never use a short handled brush.

9. If reels stall or become erratic while backlapping, select a higher speed setting until speed stabilizes, then return reel speed to setting 1 or desired speed.

10. To make an adjustment to the cutting units while backlapping, turn reels OFF by moving the Lower Mow/Raise lever rearward; move the Enable/Disable switch to Disable and turn the engine OFF. After adjustments have been completed, repeat steps 5 − 9.

11. Repeat procedure for all cutting units to be backlapped.

12. When backlap operation has been completed, return the backlap switch to OFF, lower seat and tighten both locking bolts securely, and wash all lapping compound off cutting units. Adjust cutting unit reel to bedknife as needed.

IMPORTANT: If the backlap switch is not returned to OFF position after backlapping, the cutting units will not raise or function properly.

ELECTRICAL SCHEMATIC

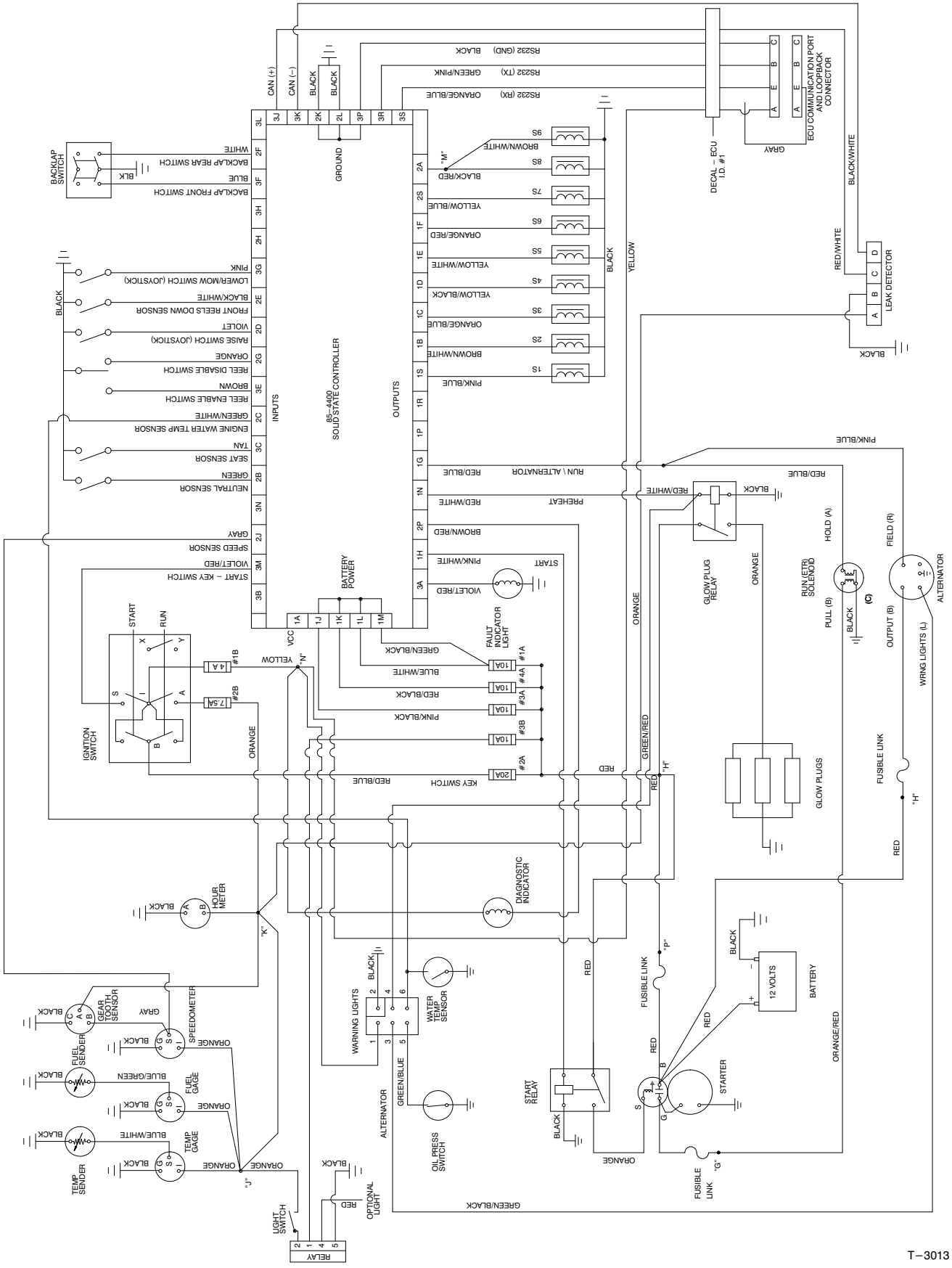

HYDRAULIC SCHEMATIC

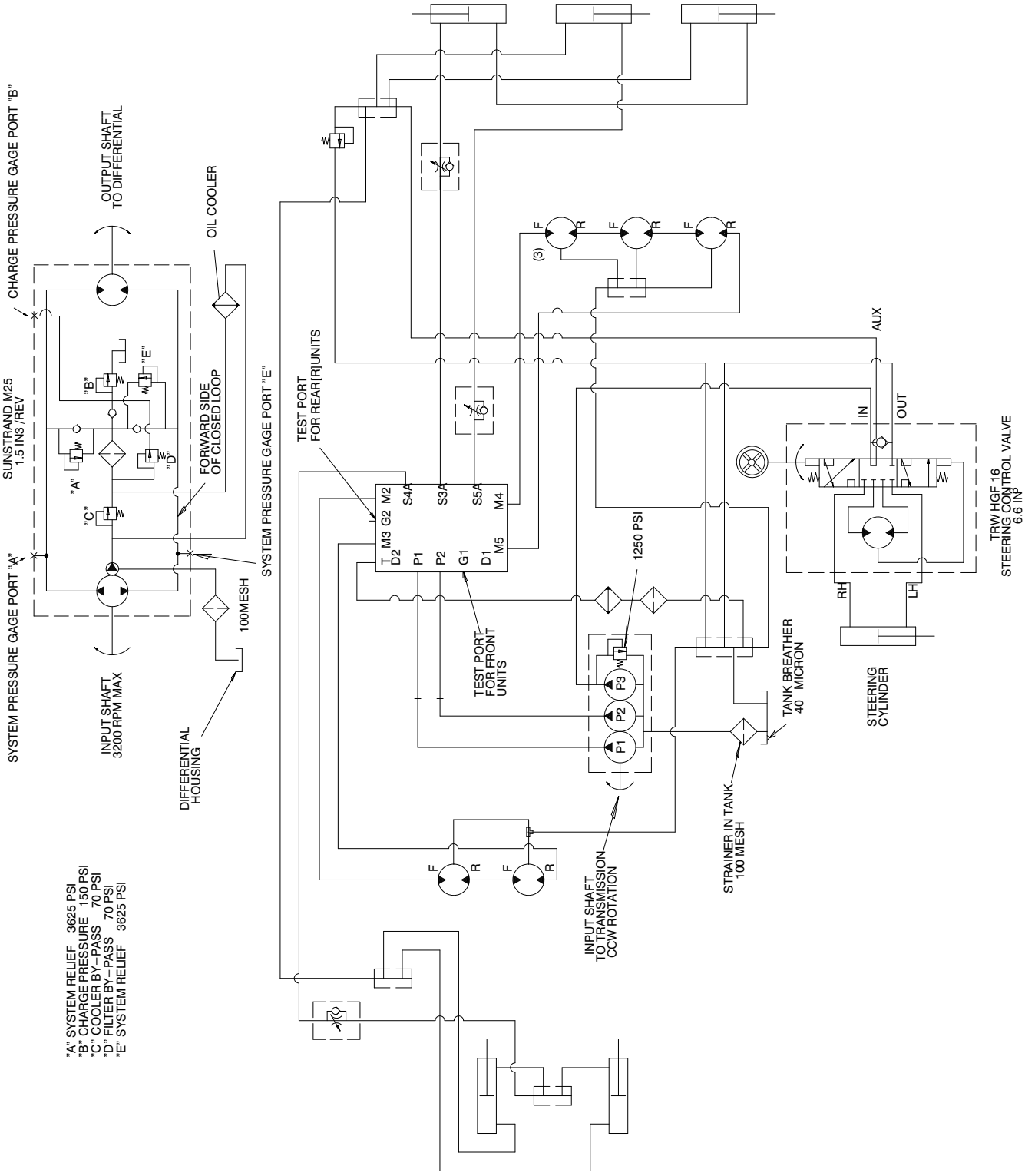

T–1144–4

MAINTENANCE SCHEDULE

Minimum Recommended Maintenance Intervals

Maintenance Procedure	Maintenance Interval & Service

	Every 50hrs	Every 100hrs	Every 200hrs	Every 400hrs	Every 800hrs
Check Battery Fluid Level					
Check Battery Cable Connections					
Lubricate All Grease Fittings					
Change Engine Oil					
Inspect Air Filter, Dust Cup and Baffle					
† Check Fan and Alternator Belt Tension					
‡ Replace Engine Oil Filter					
Inspect Cooling System Hoses					
Drain Moisture−Hyd. Tank					
Drain Moisture−Fuel Tank					
Check Reel Bearing Preload					
† Torque Wheel Lug Nuts					
◕ Service Air Cleaner					
Replace Fuel/Water Separator Filter					
Replace Fuel Filter					
Inspect Traction Linkage Movement					
‡ Torque Head and Adjust Valves					
‡ Check Engine RPM (idle and full throttle)					
Change Hydraulic Fluid					
† Change Transmission Fluid					
† Replace Transmission Filter					
Check Rear Wheel Toe−in					
Rear Axle Service					
−pack Rear Wheel Bearings (2WD)					
−change Rear Axle Lubricant (4WD)					

† Initial break in at 10 hours

‡ Initial break in at 50 hours

◕ if indicator shows red

Replace Moving Hoses
Replace Safety Switches
Coolant System − Flush/Replace Fluid
Fuel Tank − Drain/Flush
Hydraulic Tank − Drain/Flush

Annual Recommendations:
Items listed are recommended every 1600 hours or 2 years, whichever occurs first.

PREPARATION FOR SEASONAL STORAGE

Traction Unit

1. Thoroughly clean the traction unit, cutting units and the engine.

2. Check the tire pressure. Inflate all traction unit tires to 15−20 psi.

3. Check all fasteners for looseness; tighten as necessary.

4. Grease or oil all grease fittings and pivot points. Wipe up any excess lubricant.

5. Lightly sand and use touch−up paint on painted areas that are scratched, chipped, or rusted. Repair any dents in the metal body.

6. Service the battery and cables as follows:

A. Remove the battery terminals from the battery posts.

B. Clean the battery, terminals, and posts with a wire brush and baking soda solution.

C. Coat the cable terminals and battery posts with Grafo 112X skin−over grease (Toro Part No. 505-47) or petroleum jelly to prevent corrosion.

D. Slowly recharge the battery every 60 days for 24 hours to prevent lead sulfation of the battery.

Engine

1. Drain the engine oil from the oil pan and replace the drain plug.

2. Remove and discard the oil filter. Install a new oil filter.

3. Refill oil pan with 4.0 quarts of SAE10W-30 motor oil.

4. Start the engine and run at idle speed for approximately two minutes.

5. Stop the engine.

6. Thoroughly drain all fuel from the fuel tank, lines and the fuel filter/water separator assembly.

7. Flush the fuel tank with fresh, clean diesel fuel.

8. Re−secure all fuel system fittings.

9. Thoroughly clean and service the air cleaner assembly.

10. Seal the air cleaner inlet and the exhaust outlet with weatherproof tape.

11. Check anti−freeze protection and add as needed for expected minimum temperature in your area.

IDENTIFICATION AND ORDERING

MODEL AND SERIAL NUMBER

The model and serial number is on a plate that is mounted on the left side of footrest. Use model and serial number in all correspondence and when ordering parts.

To order replacement parts from an authorized TORO Distributor, supply the following information:

1. Model and serial numbers of the machine.

2. Part number, description and quantity of parts desired.

Note: Do not order by reference number if a parts catalog is being used; use the part number.

The Toro Commercial Products Two Year Limited Warranty

The Toro Company warrants your 1996 or newer Toro Commercial Product ("Product") purchased after January 1, 1997, to be free from defects in materials or workmanship for the period of time listed below. Where a warrantable condition exists, Toro will repair the Product at no cost to you including diagnosis, labor, parts, and transportation. This warranty begins on the date the Product is delivered to the original retail purchaser.

Warranty Duration: Two years or 1500 operational hours*, whichever occurs first.
***Product equipped with hour meter**

Owner Responsibilities:

As the Product owner, you are responsible for required maintenance and adjustments stated in your Owner's Manual. Failure to perform required maintenance and adjustments can be grounds for disallowing a warranty claim.

Instructions for Obtaining Warranty Service:

You are responsible for notifying the Commercial Products Distributor or Authorized Commercial Products Dealer from whom you purchased the Product as soon as you believe a warrantable condition exists.

If you need help locating a Commercial Products Distributor or Authorized Dealer, or if you have questions regarding your warranty rights or responsibilities, you may contact us at:

Toro Commercial Products Service Department
8111 Lyndale Avenue South
Minneapolis, MN, 55420–1196
Telephone: (612) 888–8801
Facsimile: (612) 887–8258
E–Mail: Commercial.Service@Toro.Com

Maintenance Parts:

Parts scheduled for replacement as required maintenance ("Maintenance Parts"), are warranted for the period of time up to the scheduled replacement time for that part.

Items/Conditions Not Covered:

Not all product failures or malfunctions that occur during the warranty period are defects in materials or workmanship. The items / conditions listed below are not covered by this warranty:

- Product failures which result from the use of non–Toro replacement parts, or from installation and use of add–on, modified, or unapproved accessories are not covered.
- Product failures which result from failure to perform required maintenance and/or adjustments are not covered.
- Product failures which result from operating the Product in an abusive, negligent or reckless manner are not covered.
- This warranty does not apply to parts subject to consumption through use unless found to be defective. Examples of parts which are consumed, or used up, during normal Product operation include, but are not limited to, blades, reels, bedknives, tines, spark plugs, castor wheels, tires, filters, belts, etc.
- This warranty does not apply to failures caused by outside influence. Items considered to be outside influence include, but are not limited to, weather, storage practices, contamination, use of unapproved coolants, lubricants, additives, or chemicals, etc.
- This warranty does not apply to normal "wear and tear" items. Normal "Wear and Tear" includes, but is not limited to, damage to seats due to wear or abrasion, worn painted surfaces, scratched decals or windows, etc.

Other Legal Disclaimers:

The above remedy of product defects through repair by an authorized distributor or dealer is the purchaser's sole remedy for any defect. This warranty gives you specific legal rights, and you may also have other rights which vary from state to state.

Except for the Emissions warranty referenced below, if applicable, there is no other express warranty. All implied warranties of merchantability and fitness for use are limited to the duration of the express warranty.

Some states do not allow limitations on how long an implied warranty lasts, so the above limitation may not apply to you.

The Toro Company is not liable for indirect, incidental or consequential damages in connection with the use of the Product, including any cost or expense of providing substitute Product or service during periods of malfunction or non–use.

Some states do not allow the exclusion of incidental or consequential damages, so the above exclusion may not apply to you.

Note to California residents: The Emissions Control System on your Product may be covered by a separate warranty meeting requirements established by the U.S. Environmental Protection Agency (EPA), or the California Air Resources Board (CARB). The hour limitations set forth above do not apply to the Emissions Control System Warranty. Refer to the California Emission Control Warranty Statement printed in your Owner's Manual or contained in the engine manufacturer's documentation for details.