TORO®

MODEL NO. 03544–90400 & UP

PARTS CATALOG

REELMASTER® 5400D 4WD
TRACTION UNIT & LIFT ARMS

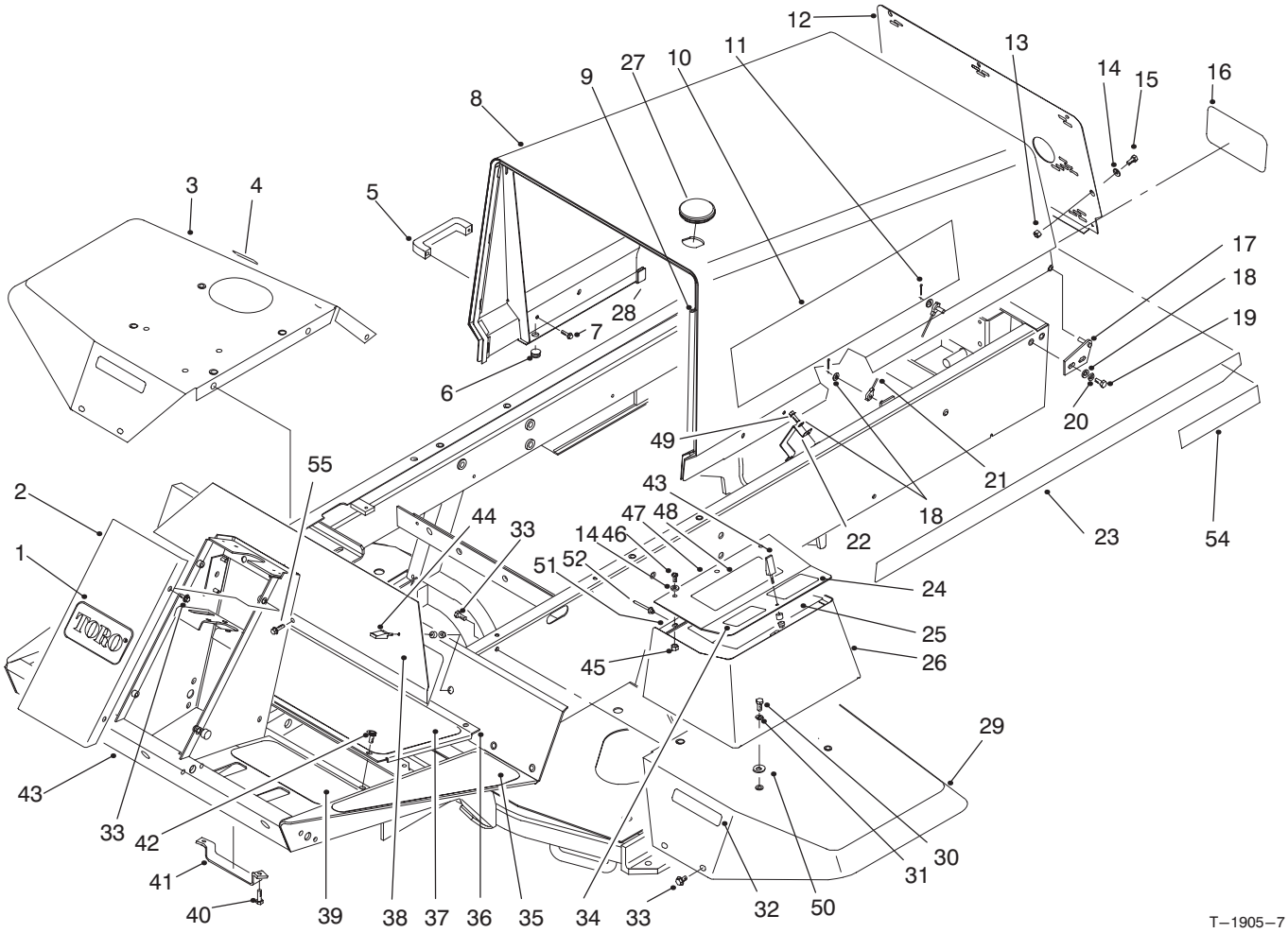

FRAME & BODY ASSEMBLY

Ref. No.	Part No.	Description	No. Used
1	62–5550	Decal–TORO	1
2	75–1420	Cover–Steering Tower	1
3	93–7579	Fender–RH	1
4	93–6686	Decal–Hyd. Oil	1
5	65–5100	Handle	2
6	237–141	Bumper	2
7	46–8091	Screw–HH	4
8	98–9319	Hood	1
9	93–0081	Strip–Seal	1
10	98–4522	Decal–Reelmaster® 5400D	2
11	3272–4	Pin–Cotter	2
12	98–4573	Screen–Hood	1
13	3296–42	Nut–Lock	7
14	3256–1	Washer–Flat	10
15	321–39	Screw–HH	7
16	62–7400	Decal–TORO	1
17	63–6900	Hinge–Hood LH	1

Ref. No.	Part No.	Description	No. Used
*	63–6890	Hinge–Hood RH	1
18	3256–23	Washer–Flat	6
19	322–5	Screw–HH	4
20	3253–4	Washer–Lock	4
21	75–0570	Cable–Hood	1
22	98–4572	Bracket–Hose	1
23	92–5751	Decal–Hood Trim LH	1
*	92–5752	Decal–Hood Trim RH	1
24	93–6698	Decal–Warning	1
25	98–9340	Decal–Service	1
26	75–5810	Tool Box	1
27	98–9314	Plug–Hood	1
28	99–8975	Strip–Seal	1
29	75–3860	Fender–LH	1
30	322–3	Screw–HH	4
31	3256–3	Washer–Flat	4
32	93–6689	Decal–No Riders	2

* Not Illustrated

©The TORO Company — 1999
All Rights Reserved

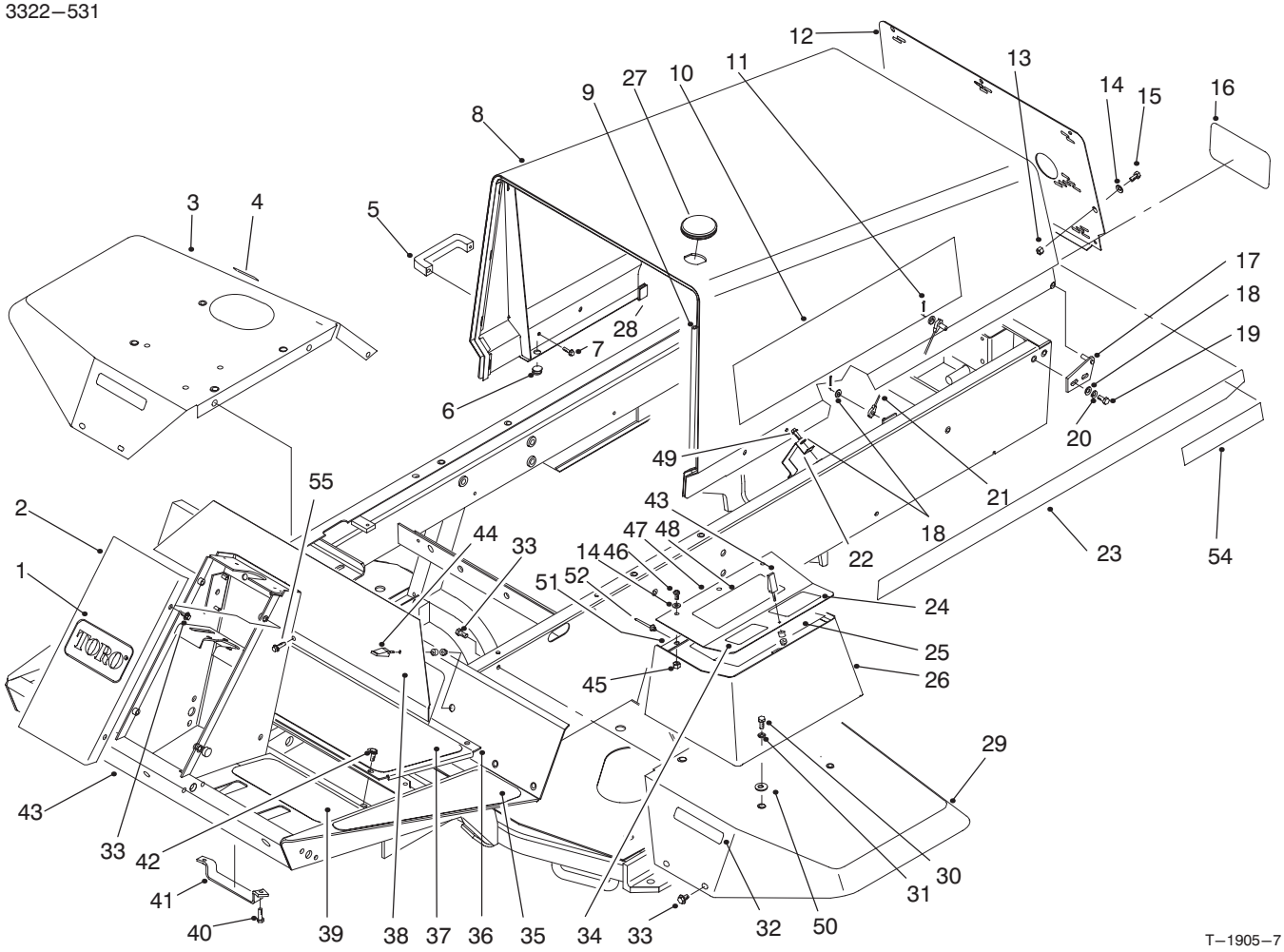

FRAME & BODY ASSEMBLY (Continued)

Ref. No.	Part No.	Description	No. Used
33	3234−14	Screw−HWH	14
34	3234−5	Screw−HHF	1
35	75−0650	Tread−Footrest LH	1
*	75−0640	Tread−Footrest RH	1
36	75−1410	Panel−Floor	1
37	75−0630	Tread−Foot Center	1
38	75−1390	Panel−Access	1
39	75−0620	Tread−Foot LH	1
*	75−0610	Tread−Foot RH	1
40	322−4	Screw−HH	2
41	93−3626	Bracket−Hose	1
42	75−6840	Knob−Knurled	4
42	3234−7	Screw−HHF (Europe)	1

Ref. No.	Part No.	Description	No. Used
43	98−4549	Asm−Frame	1
44	74−5950	Asm−Swell Latch	3
45	32128−33	Nut−Flange Head	3
46	3258−166	Screw−PPH	3
47	75−6260	Cover−Tool Box	1
48	93−8051	Decal−Warning	1
49	32144−14	Screw−HWH	2
50	66−2920	Washer−Nylon	4
51	75−5780	Hinge−Cover	1
52	93−8744	Rivet	3
54	72−3560	Decal−4WD	2
55	3234−5	Screw−HFH	1

*Not Illustrated

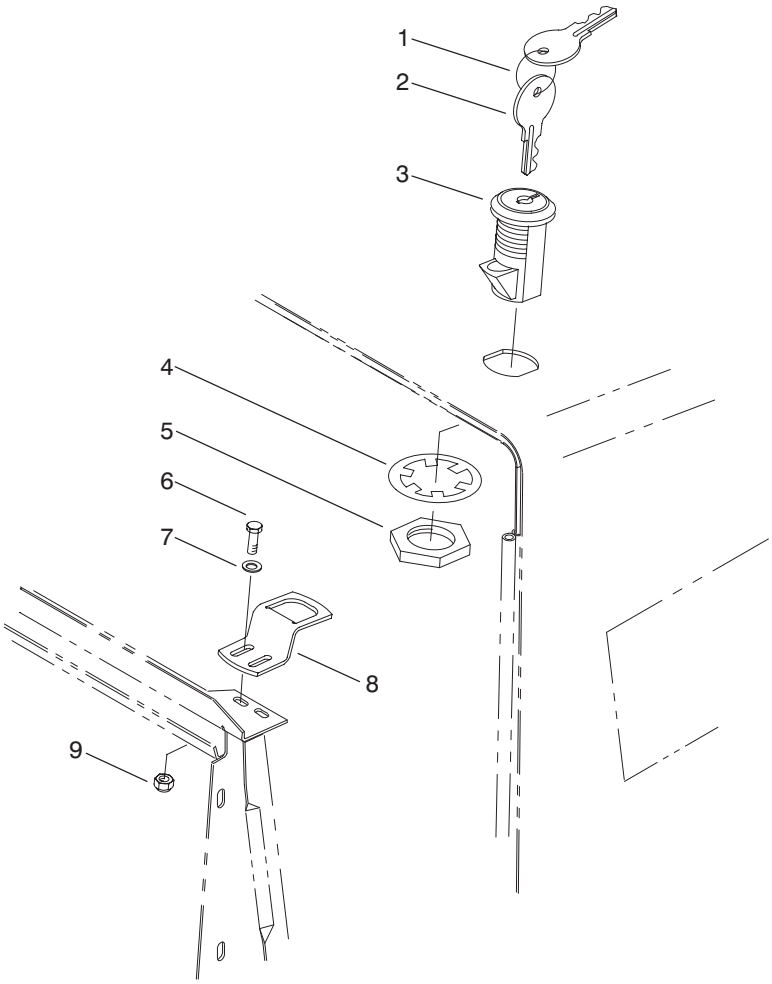

T–3095

HOOD SWITCH & LOCK ASSEMBLY

Ref. No.	Part No.	Description	No. Used
1	98–9321	Ring–Key	1
2	99–8350	Key–Switch	1
3	98–9315	Switch–Lock, Hood (Incl. Ref. #4 & 5)	1
4		Washer–Switch	1

Ref. No.	Part No.	Description	No. Used
5		Nut–Switch	1
6	321–4	Screw–HH	2
7	3256–1	Washer–Flat	2
8	98–9316	Bracket–Latch, Hood	1
9	3296–16	Nut–Lock	2

3322−531

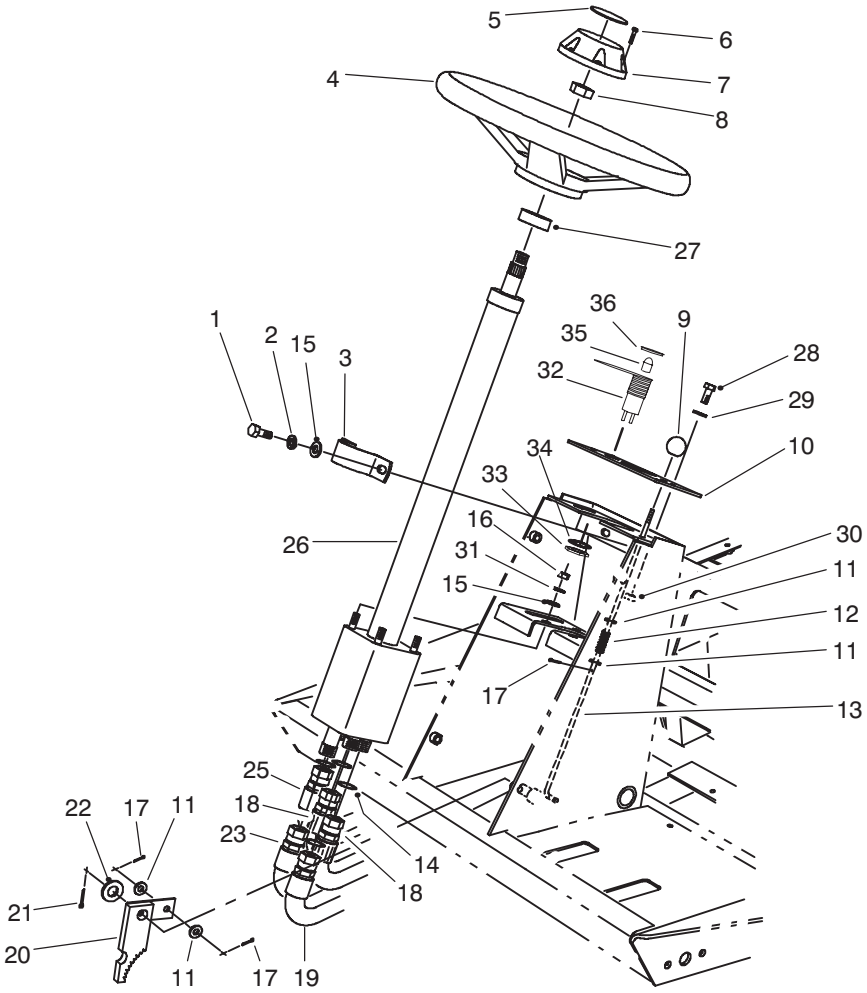

T−1044−2

STEERING TOWER ASSEMBLY

Ref. No.	Part No.	Description	No. Used
1	32144−26	Screw−TAP	2
2	3253−4	Washer−Lock	2
3	75−2810	Clamp−Steering Valve	1
4	75−0560	Asm−Steering Wheel (Incl. Ref. #6−8)	1
5	68−5370	Decal−TORO	1
6	32144−21	Screw	1
7	68−5140	Cap−Steering Wheel	1
8	3220−6	Nut−Steering Wheel	1
9	233−17	Knob−Parking Brake	1
10	93−6682	Panel−Tower	1
11	3256−22	Washer−Flat	4
12	95−1821	Spring−Compression	1
13	75−1490	Rod−Parking Brake	1
14	237−22	O−Ring	5
15	3255−8	Washer−Lock ETLW	1
16	3296−20	Nut−Lock	4
17	3272−5	Pin−Cotter	3
18	75−6230	Hose−Hydraulic RT	2
19	75−6240	Hose−Hydraulic IN	1

Ref. No.	Part No.	Description	No. Used
20	63−7900	Rack−Parking Brake	1
21	3272−10	Pin−Cotter	1
22	3256−26	Washer−Flat	1
23	75−5940	Hose−Hydraulic AUX	1
25	75−6250	Hose−Hydraulic OUT	1
26	75−0600	Asm−Steering Valve (Incl. Ref. #14)	1
27	21−9260	Seal−Shaft	1
28	3258−166	Screw−PPH	2
29	3256−1	Washer−Flat	2
30	3296−42	Nut−Lock	2
31	3256−23	Washer−Flat	6
32	44−2210	Asm−Lights, Warning (Incl. Ref. #33−36)	1
33	218−535	Nut−Lock	1
34	218−536	Washer−Lock	1
35	93−7480	Bulb−LED	1
36	218−533	Lens−Red	1
*	3290−378	Tie−Cable	3
*	3290−410	Tie−Cable, Push On	4

*Not Illustrated

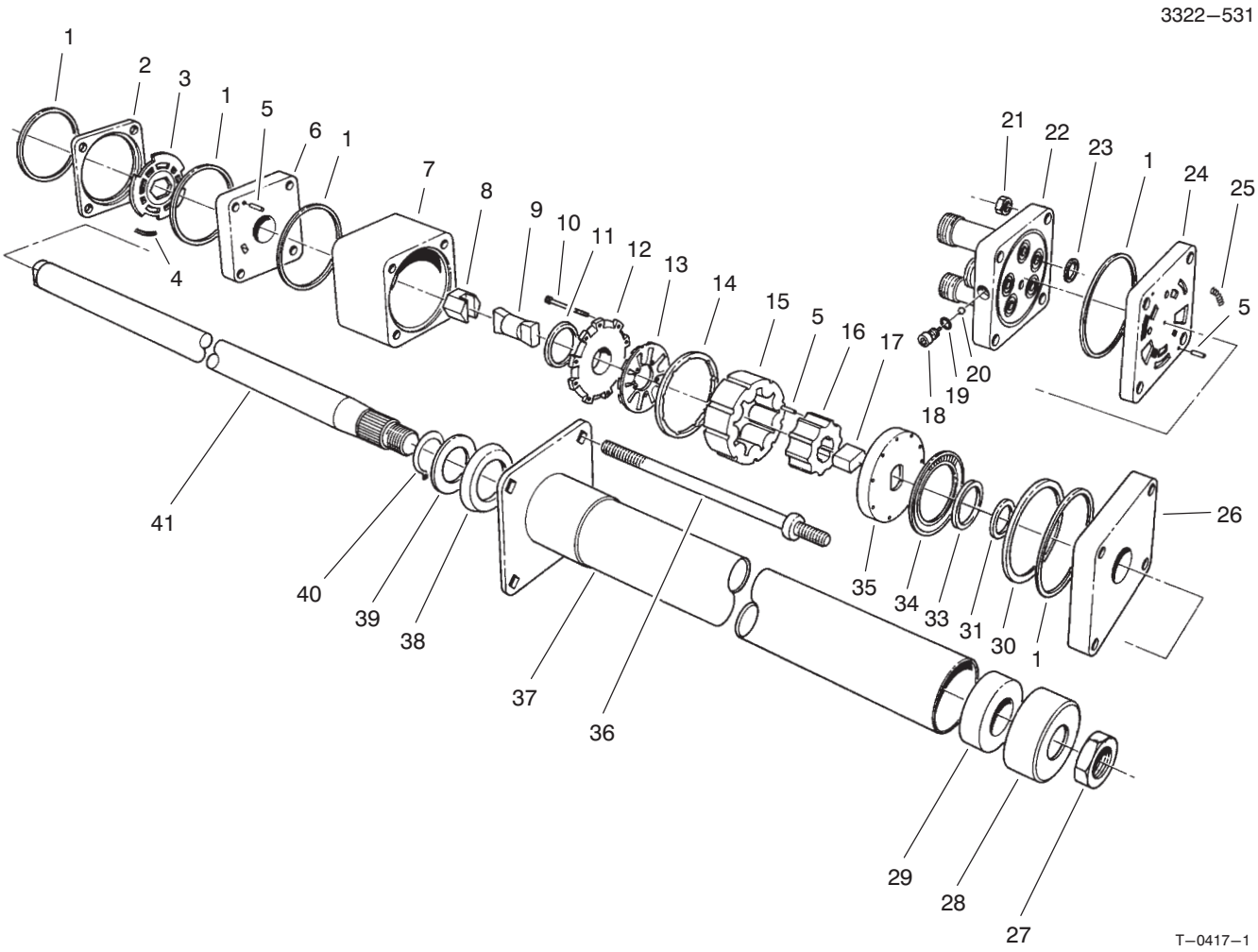

STEERING VALVE ASSEMBLY No. 75–0600

Ref. No.	Part No.	Description	No. Used
1		Ring–Seal	5
2		Ring–Valve	1
3		Plate–Valve	1
4		Spring	3
5		Pin–Alignment	9
6		Manifold–Isolation	1
7		Ring–Metering	1
8		Asm–Hex Drive	1
9		Link–Drive	1
10		Screw–HSH	11
11		Seal–Commutator	1
12		Cover–Commutator	1
13		Commutator	1
14		Ring–Commutator	1
15		Stator	1
16		Rotor	1
17		Spacer–Drive Link	1
18		Plug	1
19		O–Ring	1
20		Ball	1
21		Nut–Hex	4
22		Cover–Port	1
23		O–Ring	5
24		Manifold–Port	1
25		Spring	3

Ref. No.	Part No.	Description	No. Used
26		Plate–Cover, Upper	1
27	3220–6	Nut	1
28	66–9770	Seal	1
29	66–9780	Bushing	1
30		Spacer–Bearing, Thrust	1
31		Spacer–Seal	1
33		Seal–Face	1
34		Bearing–Thrust	1
35		Plate–Drive	1
36	93–3609	Bolt–Special	4
37	66–9860	Upper Cover & Jacket	1
38	66–9870	Plate–Retaining	1
39	66–9880	Washer–Retaining Plate	1
40	66–9890	Ring–Retaining	1
41	66–9900	Shaft–Input	1
*	66–9970	Kit–Spring (Incl. Ref. #4 & 25)	1
*	66–9980	Kit–Seal (Incl. Ref. #1, 11, 19, 23 & 33)	1
*	66–9990	Kit–Needle Roller (Incl. Ref. #5)	1
*	75–1340	Valve–Power Steering (Incl. Ref. #1–26 & 30–36)	1

*Not Illustrated

3322–531

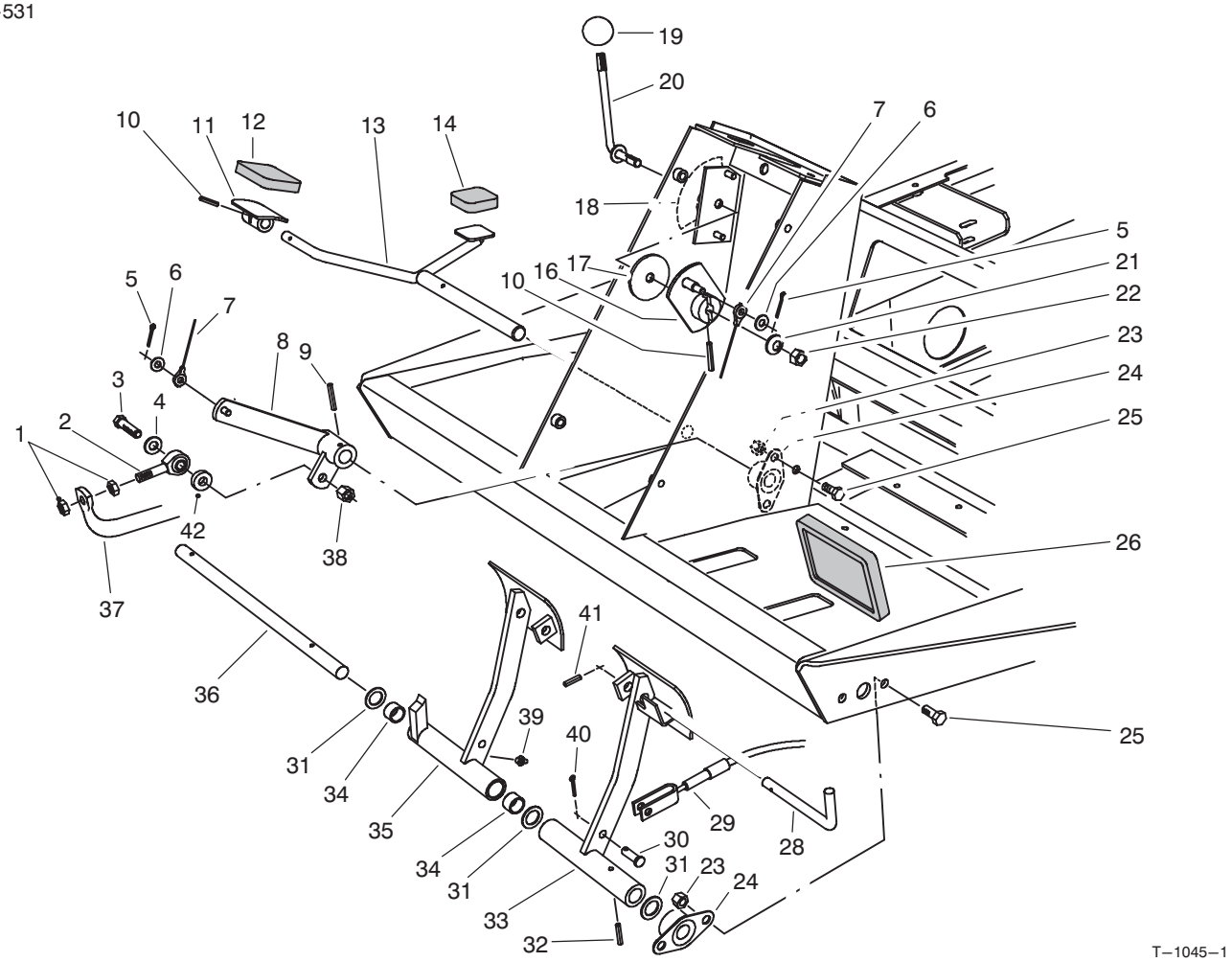

TRACTION & BRAKE PEDALS ASSEMBLY

Ref. No.	Part No.	Description	No. Used
1	3220–3	Nut–Jam	2
2	2411–36	Bearing–Rod End	1
3	323–9	Screw–HH	1
4	3256–24	Washer–Flat	1
5	3272–2	Pin–Cotter	2
6	3256–22	Washer–Flat	2
7	75–6580	Cable–Pedal	1
8	75–3270	Lever–Traction Pivot	1
9	32121–6	Pin–Roll	1
10	32121–45	Pin–Roll	2
11	49–6440	Plate–Traction Pedal	1
12	74–9100	Pad–Forward	1
13	75–2970	Pedal–Traction	1
14	74–9110	Pad–Reverse	1
16	75–6510	Lever–Bracket	1
17	75–6550	Disc–Friction	1
18	93–6699	Decal–Fast/Slow	1
19	233–42	Knob	1
20	75–6490	Lever–Pedal Stop	1
21	3290–461	Washer–Belleville	1
22	3296–59	Nut–Lock	1

Ref. No.	Part No.	Description	No. Used
23	3296–29	Nut–Lock	8
24	256–236	Bearing–Flange	4
25	322–3	Screw–HH	8
26	93–8742	Pad–Brake	2
28	63–7880	Pin–Brake Latch	1
29	63–7733	Cable–Brake LH	1
*	63–7732	Cable–Brake RH	1
30	283–58	Pin–Clevis	4
31	3256–69	Washer–Thrust	3
32	32121–16	Pin–Roll	1
33	75–1440	Pedal–Brake LH	1
34	256–42	Bushing–Sleeve	2
35	75–1430	Asm–Brake Pedal RH (Incl. Ref. #34 & 39)	1
36	75–1470	Shaft–Brake Pedal	1
37	75–2170	Tube–Pump Control	1
38	3296–39	Nut–Lock	1
39	302–5	Fitting–Grease	1
40	3272–10	Pin–Cotter	4
41	32121–50	Pin–Roll	1
42	5–0652	Spacer	1

*Not Illustrated

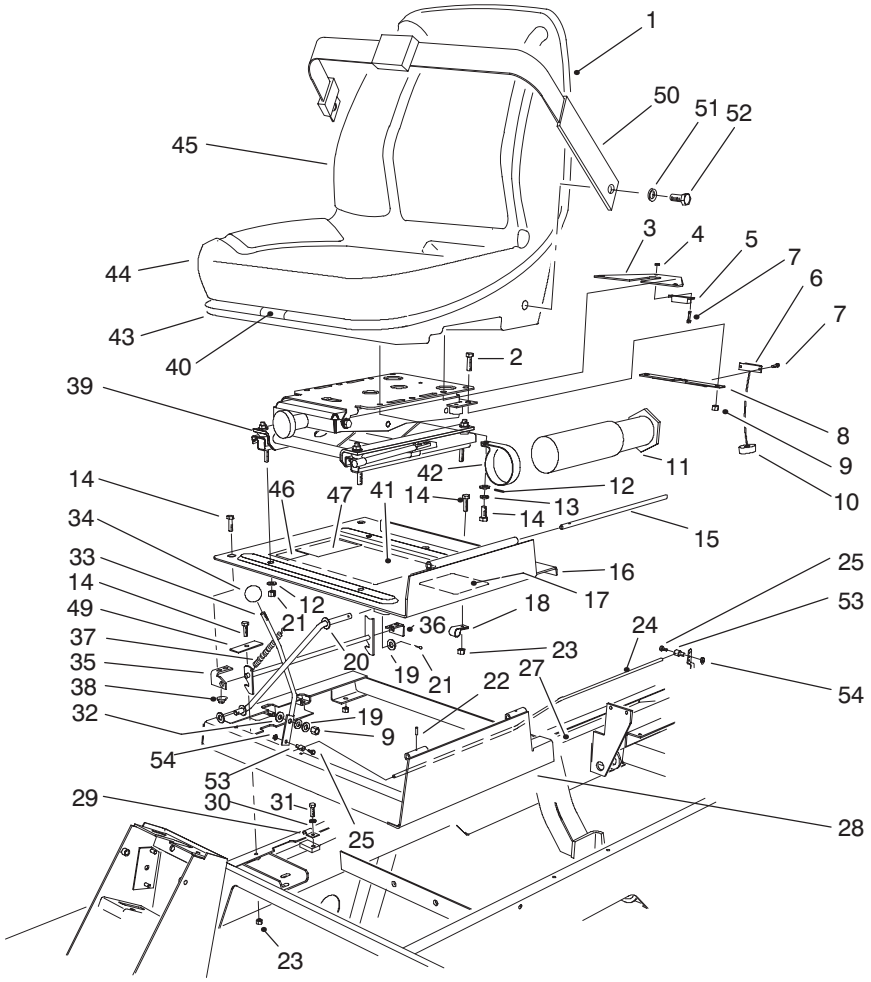

T–1906–4

SEAT & THROTTLE ASSEMBLY

Ref. No.	Part No.	Description	No. Used
1	351–78	Edging	1
2	323–4	Screw–HH	2
3	75–4370	Bracket–Switch (Seat)	1
4	3296–54	Nut–Lock	4
5	92–8753	Magnet–Reed Switch	1
6	92–8001	Sensor–Reed Switch	1
7	3250–29	Screw–HH	4
8	75–4360	Bracket–Switch	1
9	3296–39	Nut–Lock	3
10	93–0140	Grommet	1
11	74–0720	Tube–Manual	1
12	3256–23	Washer–Flat	8
13	3253–4	Washer–Lock	4
14	322–3	Screw–HH	13
15	75–3400	Shaft–Seat Pivot	1
16	98–2350	Asm–Seat Plate (Incl. Ref. #10)	1
17	93–8060	Decal–Danger	1
18	2412–93	Clamp–R	1
19	3256–24	Washer–Flat	3
20	75–3680	Rod–Seat	1
21	3272–10	Pin–Cotter	2
22	32121–38	Pin–Roll	1
23	3296–29	Nut–Lock	10
24	98–9303	Cable–Throttle	1
25	25–8640	Screw–HH	2
26	93–0021	Asm–Throttle Cable Swivel	1
27	3296–3	Nut–Lock	1

Ref. No.	Part No.	Description	No. Used
28	98–2352	Frame–Seat	1
29	3–6657	Clamp–Cable	1
30	3253–3	Washer–Lock	1
31	321–4	Screw–HH	1
32	66–2920	Washer–Friction	2
33	75–3430	Rod–Throttle	1
34	233–42	Knob–Throttle	1
35	98–2354	Latch–Seat	1
36	98–2353	Bracket–Seat Latch	2
37	66–4190	Spring	1
38	32128–25	Nut–Flange	4
39	75–3000	Asm–Seat Suspension	1
40	351–80	Clip	1
41	98–9342	Decal–Clip (Metric)	1
42	2412–133	Clamp–R	2
43	92–6534	Shell–Seat	1
44	92–6533	Kit–Cushion, Replacement	1
45	92–1180	Asm–Seat (Incl. Ref. #1, 2 of #9, 43 & 44)	1
46	63–9920	Decal–EEC 105	1
47	92–5524	Decal–Noise Rating, 90	1
49	98–9302	Plate–Idler Stop	1
50	21–4191	Asm–Belt, Seat	1
51	3253–6	Washer–Lock	2
52	3212–4	Bolt	2
53	98–9311	Swivel–Cable, Throttle	1
54	3296–20	Nut–Lock	1

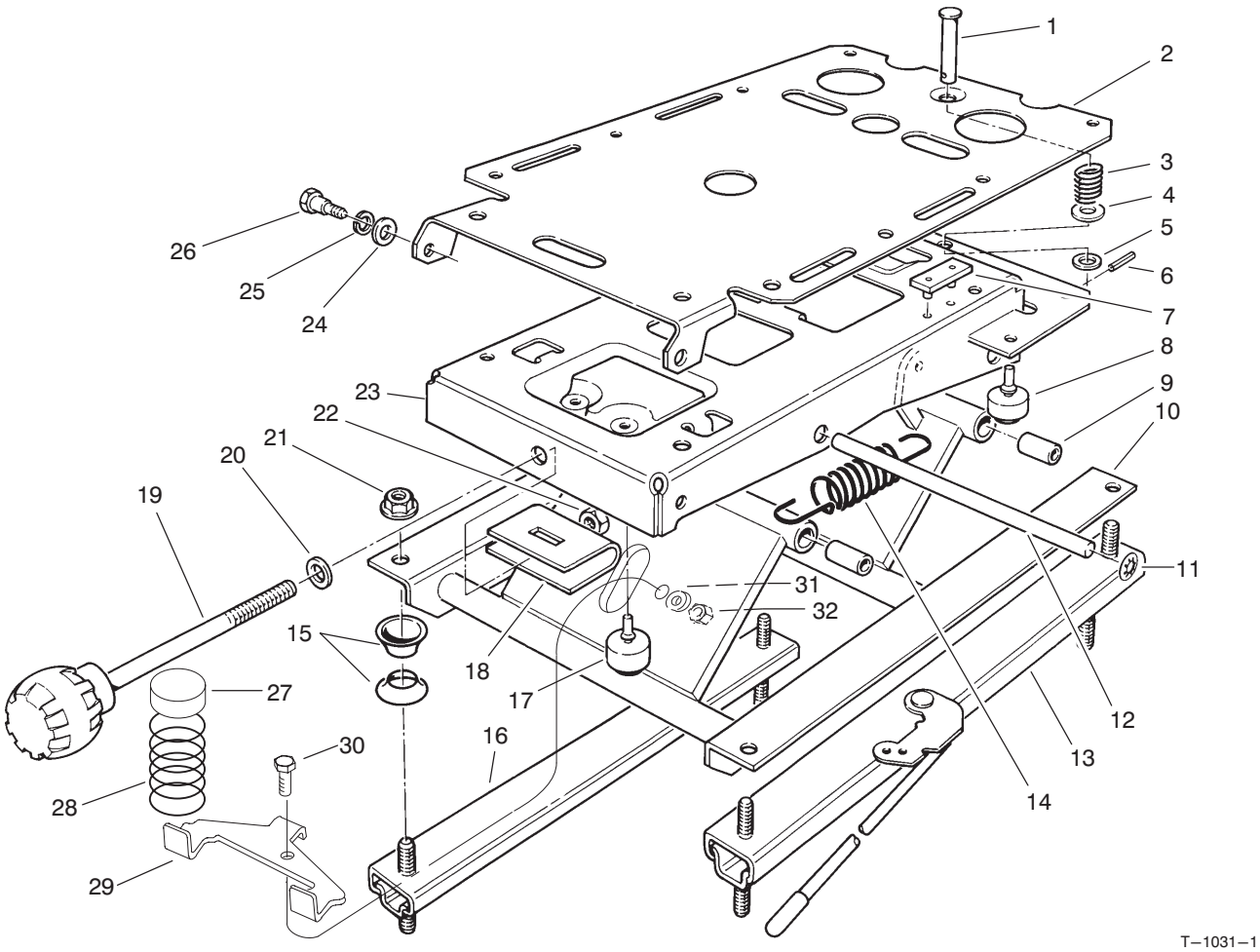

SEAT SUSPENSION ASSEMBLY

Ref. No.	Part No.	Description	No. Used
1	80–4860	Pin–Clevis	1
2	75–3580	Plate–Mounting, Seat	1
3	75–3530	Spring–Compression	1
4	3256–5	Washer–Flat	1
5	3256–24	Washer–Flat	1
6	75–3540	Pin–Roll	1
7	75–3550	Bumper–Seat	2
8	76–2940	Bumper–Rubber	2
9	76–1920	Bushing–Sleeve	4
10	66–8610	Weldment–Lower	1
11	66–8560	Nut–Push	4
12	76–1910	Shaft–Pivot	2
13	82–9060	Adjuster W/Handle	1
14	76–1940	Spring–Extension	2
15	66–9290	Spacer	6
16	66–8530	Adjuster	1

Ref. No.	Part No.	Description	No. Used
17	66–8520	Bumper–Down–stop	2
18	77–2870	Weldment–Hanger	1
19	76–1930	Knob–Tension Adjustment	1
20	3256–46	Washer–Flat	1
21	32128–26	Nut–Flange	4
22	3296–44	Nut–Lock	1
23	75–3480	Weldment–Upper	1
24	3256–26	Washer–Flat	2
25	3253–6	Washer–Lock	2
26	75–3510	Bolt–Shoulder	2
27	93–3164	Cap	2
28	93–3163	Spring	2
29	93–3165	Bracket	1
30	322–6	Screw–HH	1
31	3253–33	Washer–Lock	1
32	3217–6	Nut–Hex	1

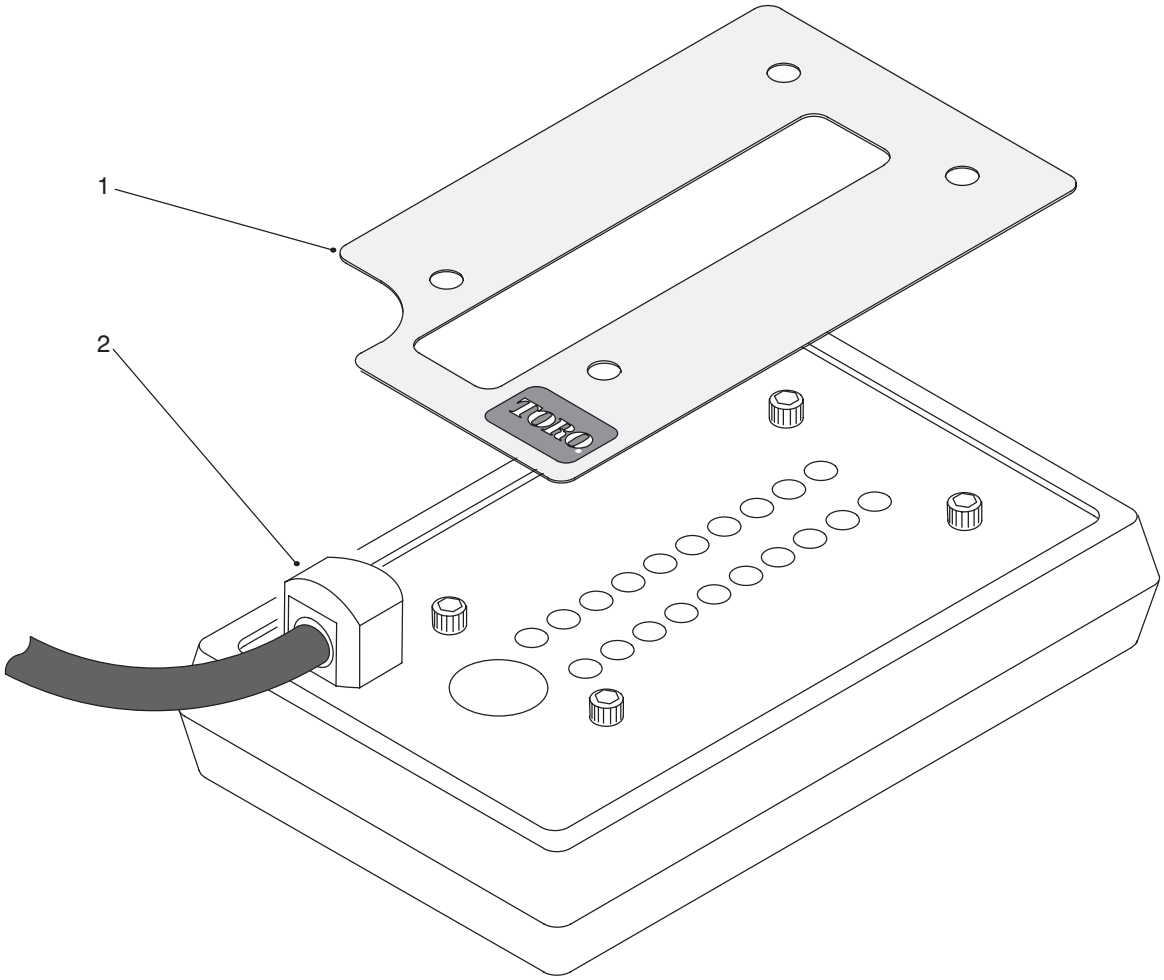

T−1458−1

DIAGNOSTIC−ACE DISPLAY ASSEMBLY

Ref. No.	Part No.	Description	No. Used
1	100−3700	Decal−Diagnostic−ACE RM 5400D V 1.0	1
1	100−3710	Decal−Diag. (Spanish)	1
1	100−3704	Decal−Diag. (French)	1
1	100−3705	Decal−Diag. (German)	1
1	100−3711	Decal−Diag. (Swedish)	1
1	100−3706	Decal−Diag. (Italian)	1
1	100−3709	Decal−Diag. (Portuguese)	1
1	100−3708	Decal−Diag. (Norwegian)	1
1	100−3703	Decal−Diag. (Finnish)	1
1	100−3701	Decal−Diag. (Danish)	1
1	100−3702	Decal−Diag. (Dutch)	1
1	100−3707	Decal−Diag. (Japan)	1
1	94−5386	Decal−Turf Defender, Diag.	1
1	94−8060	Decal−Turf Defender, Diag. (Danish)	1
1	94−8061	Decal−Turf Defender, Diag. (Dutch)	1
1	94−8062	Decal−Turf Defender, Diag. (Finnish)	1

Ref. No.	Part No.	Description	No. Used
1	94−8063	Decal−Turf Defender, Diag. (French)	1
1	94−8064	Decal−Turf Defender, Diag. (German)	1
1	94−8065	Decal−Turf Defender, Diag. (Italian)	1
1	94−8066	Decal−Turf Defender, Diag. (Japanese)	1
1	94−8067	Decal−Turf Defender, Diag. (Norwegian)	1
1	94−8068	Decal−Turf Defender, Diag. (Portuguese)	1
1	94−8069	Decal−Turf Defender, Diag. (Spanish)	1
1	94−8070	Decal−Turf Defender, Diag. (Swedish)	1
2	85−4750	Display−Diagnostic−ACE	1

ELECTRICAL SCHEMATIC

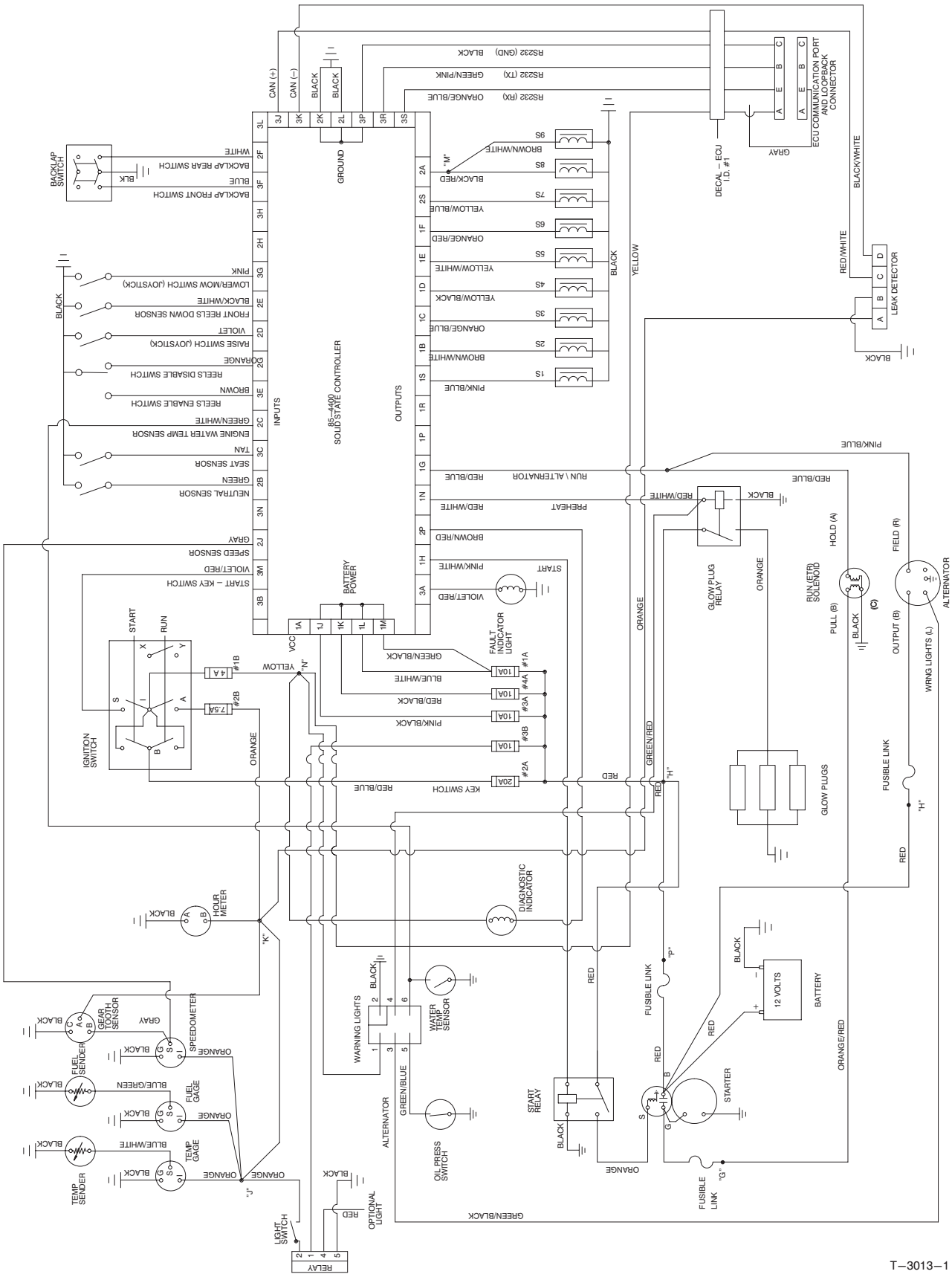

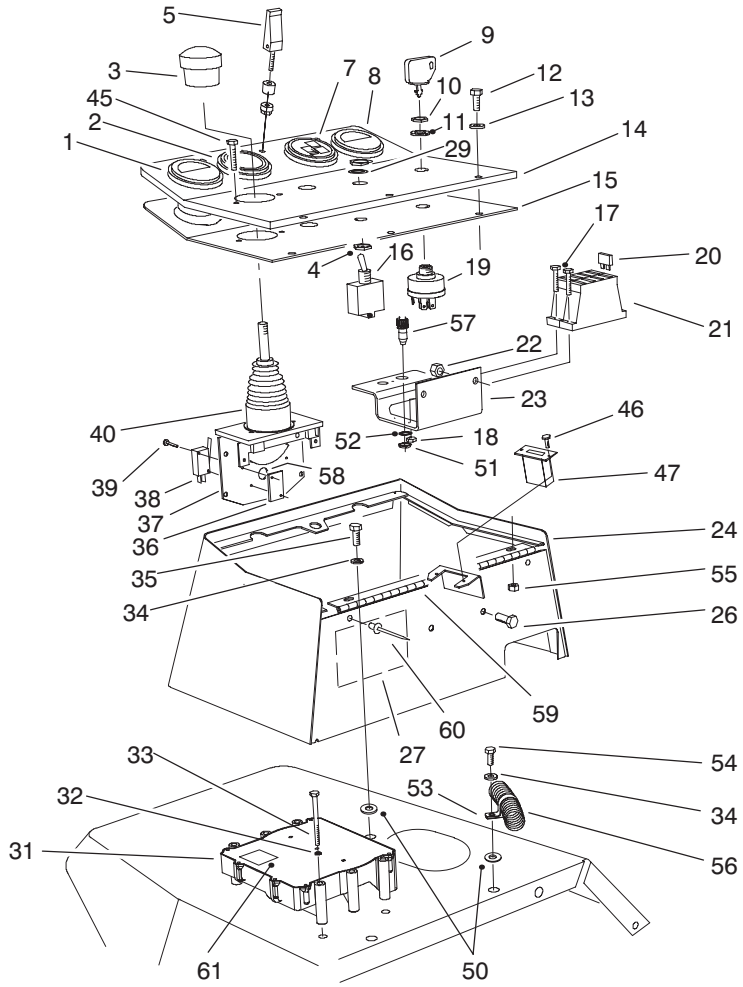

T−1501−8

CONTROL CONSOLE ASSEMBLY

Ref. No.	Part No.	Description	No. Used
1	98−9339	Gauge−Fuel	1
2	85−4420	Gauge−Speedometer	1
3	3290−489	Knob−Lift Control	1
4	218−498	Nut−Hex.	2
5	74−5950	Asm−Swell Latch	1
7	98−9306	Cluster−Warning	1
8	98−9308	Gauge−Temperature	1
9	63−8360	Key−Ignition	1
10	218−446	Nut−Locking	1
11	218−447	Washer−E.T.L.W.	1
12	3258−166	Screw−PPH	5
13	3256−1	Washer−Flat	5
14	99−8961	Panel−Control	1
15	75−6270	Cover−Control Box	1
16	99−8352	Asm−Switch, Toggle (Incl. Ref. #4, 29 & 71)	1
17	32105−13	Screw−HH	4
18	3296−2	Nut−Lock	4
19	27−2360	Asm−Ignition Switch (Incl. Ref. #9−11)	1
†20	94−9157	Fuse−4A	1
†20	218−578	Fuse−10A	3
†20	218−574	Fuse−7.5A	1
†20	218−594	Fuse−20A	1
†21	67−7160	Block−Fuse	2

Ref. No.	Part No.	Description	No. Used
22	3296−42	Nut−Lock	4
23	93−7587	Bracket−Fuse Block	1
24	75−5740	Box−Control	1
26	321−39	Screw−HH	2
27	94−6767	Decal−Fuses	1
29	218−589	Washer−Lock	1
31	92−5720	Controller−Electronic Note: This part must be programmed by distributor before installation.	1
32	3253−3	Washer−Lock	3
33	321−15	Screw−HH	3
34	3256−3	Washer−Flat	3
35	322−3	Screw−HH	2
36	3290−354	Plate−Nut	2
37	98−2195	Asm−Lift Control (Incl. Ref. #3, 36, 38−40 , & 58)	1
38	94−8104	Switch−Micro	2
39	94−8103	Screw−HH	4
40	3290−488	Boot−Lift Control	1
45	3273−26	Screw−Hex. Socket Hd.	2
46	32144−18	Screw−HH	2
47	75−6820	Meter−Hour	1

*Not Illustrated †Included in main wire harness Assembly.
▪Obtain Locally.

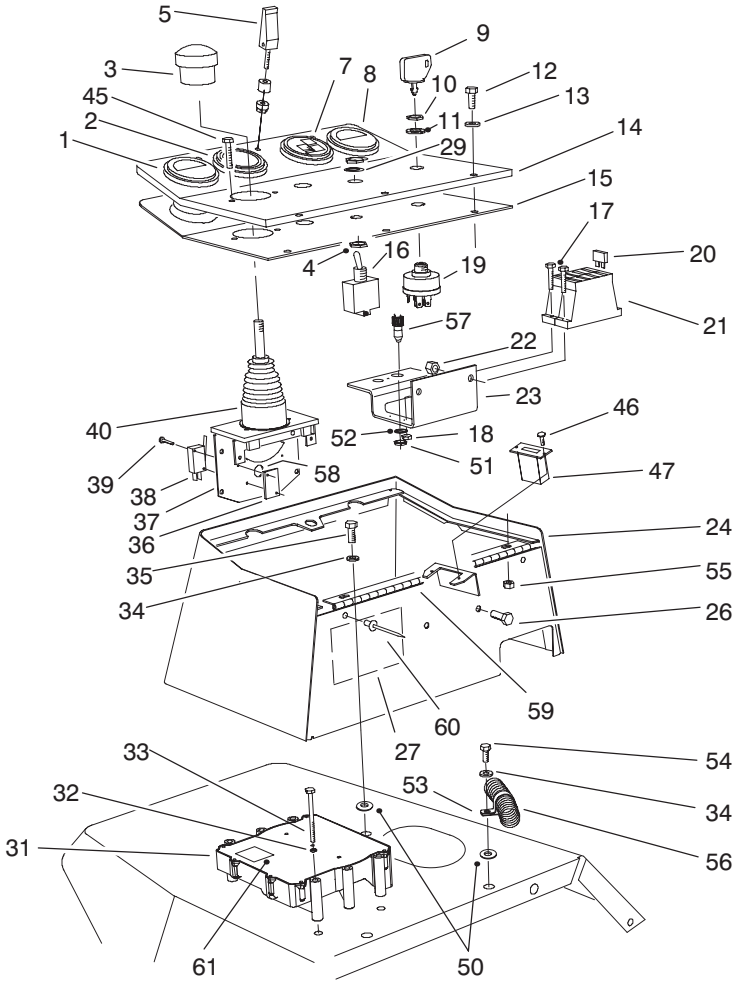

CONTROL CONSOLE ASSEMBLY (Continued)

Ref. No.	Part No.	Description	No. Used
51		Nut−Lock	1
50	66−2920	Washer−Nylon	3
52		Washer−Lock	1
53	2412−126	Clamp−R	1
54	322−5	Screw−HH	1
55	32128−33	Nut−Lock, Flange Hd.	3
56	99−8960	Asm−Main Wire Harness	1
†57	85−4491	Lamp−Diagnostic (Incl. 219−19 Lamp)	1
*	219−19	Lamp−Green	1
58	93−3625	Spring−Joystick Return	1

Ref. No.	Part No.	Description	No. Used
59	75−5780	Hinge−Cover	1
60	93−8744	Rivet	3
61	93−8053	Decal−ECU	1
66	94−3058	Cap−Upper, Joystick	1
*70	94−6343	Decal−Wire I.D.	1
*71	3253−19	Washer−Lock	2
*†	70−8570	Breaker−Circuit, 40 Amp	2
*†	86−7560	Connector−Cover (3 Way)	3
*†	86−7550	Connector−Cover (2 Way)	2
*†	85−4650	Connector−Loop Back	1

*Not Illustrated
†Included in main wire harness Assembly.

HYDRAULIC SCHEMATIC

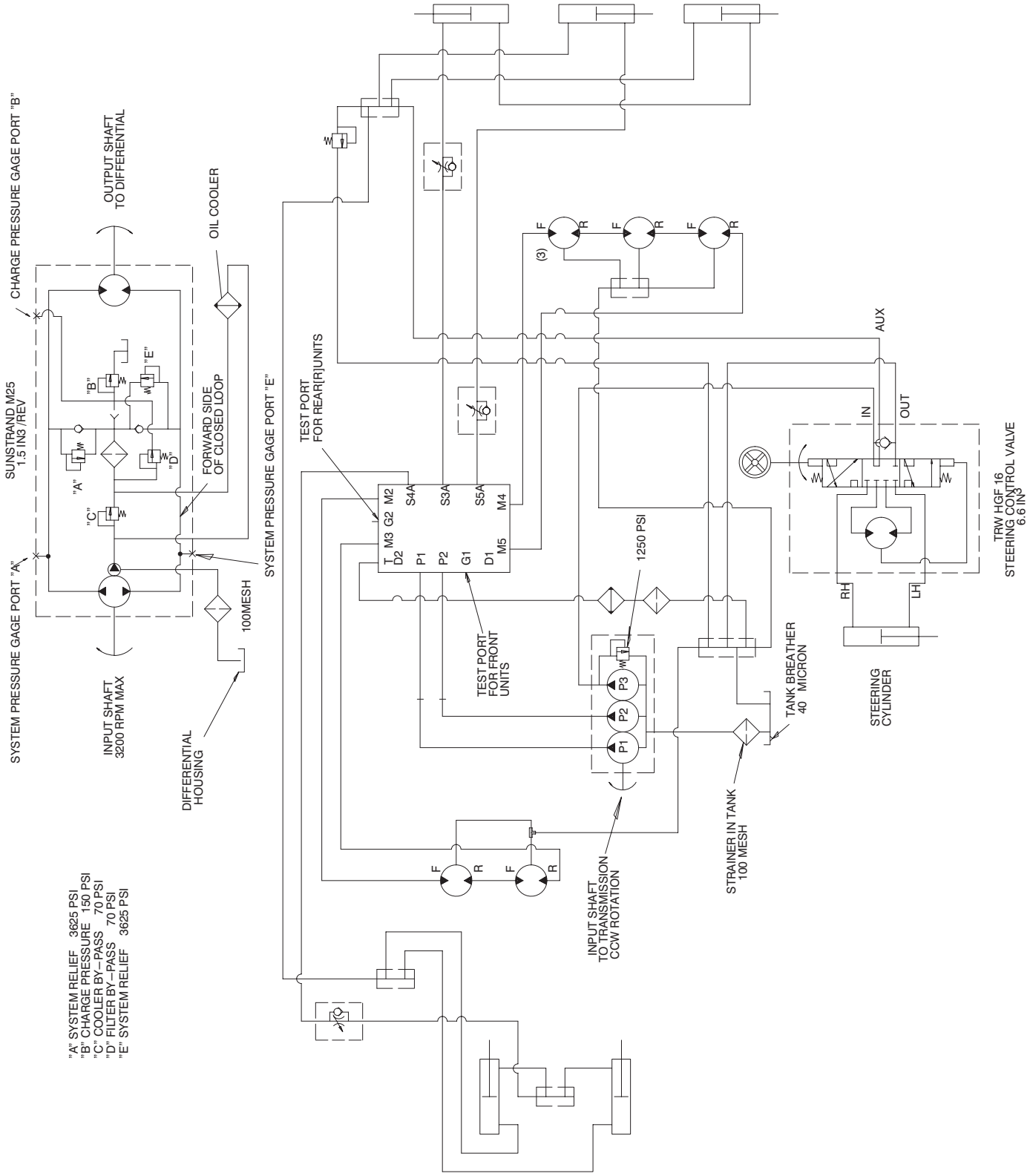

T–1144–3

3322–531

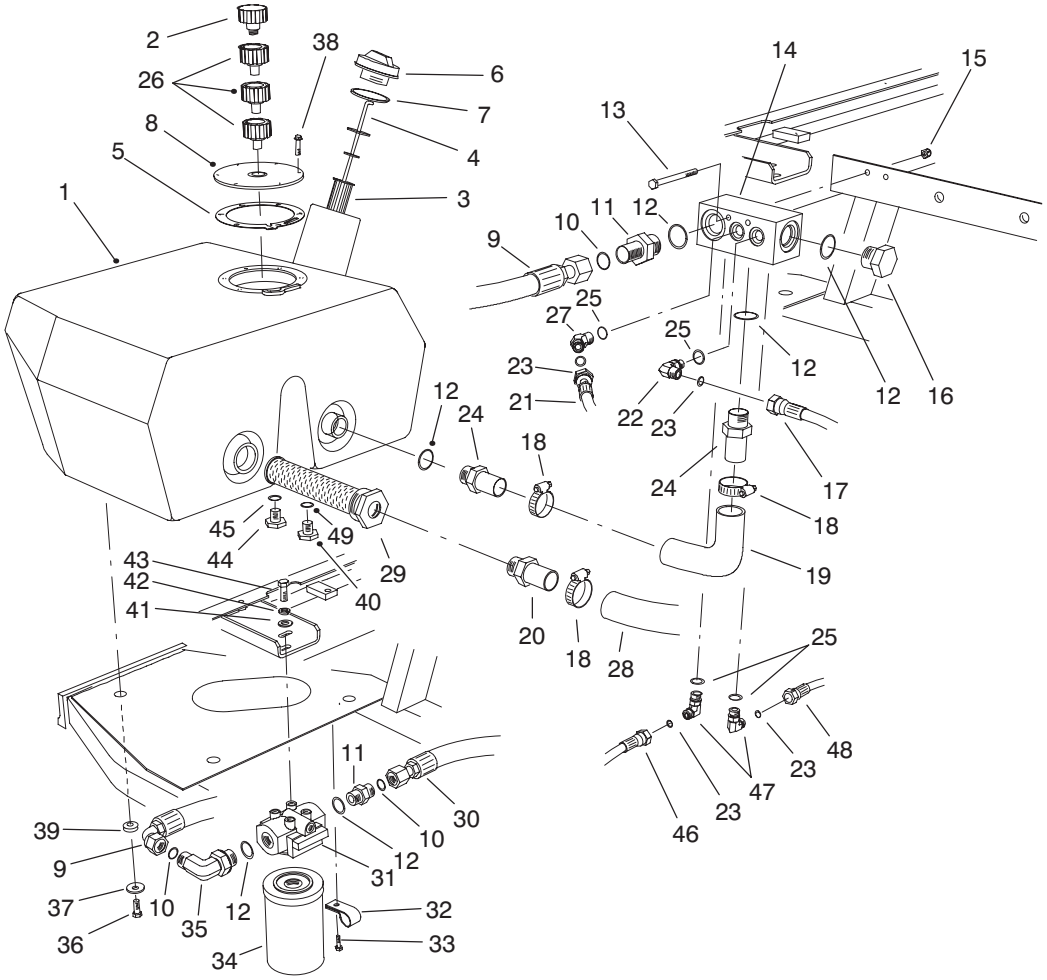

T–1048–4

HYDRAULIC RESERVOIR ASSEMBLY

Ref. No.	Part No.	Description	No. Used
1	93–7488	Reservoir–Hydraulic	1
2	68–6150	Breather–Hydraulic Tank	1
3	61–2790	Screen–Filler	1
4	94–9411	Dipstick	1
5	93–7499	Gasket–Flange	1
6	93–7498	Plug–Plastic	1
7	237–101	O–Ring	1
8	93–7588	Cover–Tank	1
9	75–6130	Hose–Hydraulic	1
10	237–65	O–Ring	5
11	340–8	Fitting–Hydraulic Straight (Incl. Ref. #10 & 12)	2
12	237–81	O–Ring	4
13	321–23	Screw–HH	2
14	92–9098	Manifold–Tank	1
15	3296–42	Nut–Lock	2
16	354–74	Fitting–Hydraulic Plug (Incl. Ref. #12)	1
17	75–6250	Hose–Hydraulic	1
18	2412–34	Clamp–Hose	3
19	75–5720	Hose–Hydraulic	1
20	353–682	Fitting–Hydraulic Straight	1
21	93–0119	Hose–Hydraulic	1
22	340–77	Fitting–Hydraulic 90° (Incl. Ref. #23 & 25)	1
23	237–22	O–Ring	6

Ref. No.	Part No.	Description	No. Used
24	354–73	Fitting–Hydraulic Straight (Incl. Ref. #12)	2
25	237–42	O–Ring	4
26	92–8020	Adapter–Breather	3
27	340–87	Fitting–Hydraulic 45° (Incl. Ref. #25 & 23)	1
28	75–6870	Hose–Hydraulic Suction	1
29	75–0550	Strainer–Suction	1
30	93–0077	Hose–Hydraulic	1
31	75–1300	Asm–Hydraulic Filter Head	1
32	2412–93	Clamp–R	2
33	32144–10	Screw–HWH	2
34	75–1310	Element–Hydraulic Filter	1
35	340–139	Fitting–Hydraulic 90° (Incl. Ref. #10 & 12)	1
36	33105–025	Screw–HH	3
37	63–8410	Washer–Flat	3
38	33104–020	Screw–HFH	6
39	240–11	Grommet	3
40	353–508	Plug–Hydraulic	1
41	3256–24	Washer–Flat	2
42	3253–21	Washer–Lock	2
43	323–4	Screw–HH	2
44	353–550	Plug–Drain (Incl. Ref. #45)	1
45	237–79	O–Ring	1

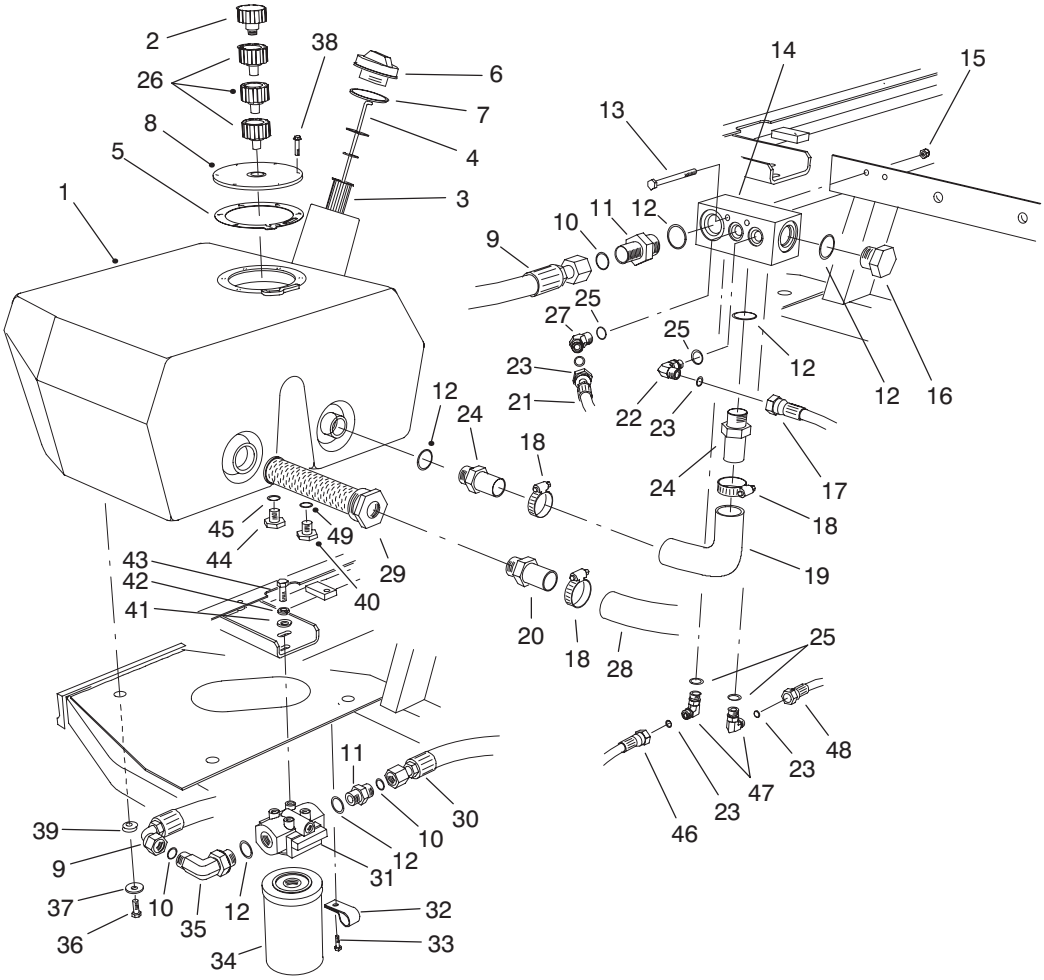

T−1048−4

HYDRAULIC RESERVOIR ASSEMBLY (Continued)

Ref. No.	Part No.	Description	No. Used
46	92−9096	Asm−Hose	1
47	340−82	Fitting−Hydraulic 90˚ (Incl. Ref. #23 & 25)	2

Ref. No.	Part No.	Description	No. Used
48	94−4916	Asm−Hose, Drain	1
49	237−42	O−Ring	1

3322–531

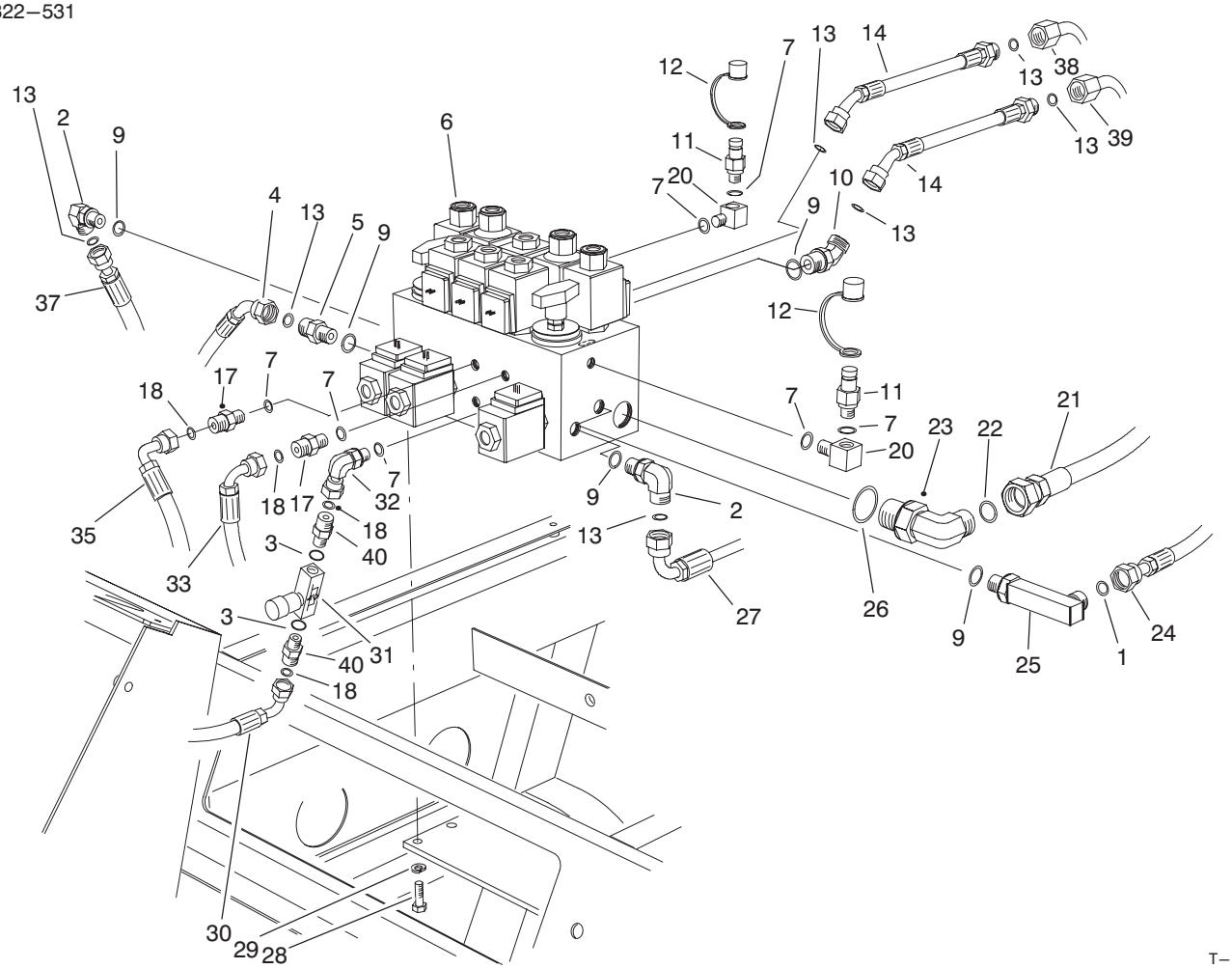

T–1094–5

HYDRAULIC CONTROL MANIFOLD ASSEMBLY

Ref. No.	Part No.	Description	No. Used
1	237–22	O–Ring	1
2	340–98	Fitting–Hydraulic 90˚ (Incl. Ref. #9 & 13)	2
3	237–42	O–Ring	2
4	98–4586	Asm–Hose, Pressure #5	1
5	340–4	Fitting–Hydraulic Straight (Incl. Ref. #9 & 13)	1
6	98–4579	Asm–Control Manifold (Incl. Ref. #32)	1
7	237–78	O–Ring	6
9	237–79	O–Ring	6
10	340–101	Fitting–Hydraulic 45˚ (Incl. Ref. #9 & 13)	2
11	354–77	Fitting–Test Port (Incl. Ref. #7)	2
12	354–79	Cap–Test Port	2
13	237–30	O–Ring	7
14	86–9190	Hose–Hydraulic	2
17	340–92	Fitting–Hydraulic Straight (Incl. Ref. #7 & 18)	2
18	237–21	O–Ring	4
20	75–6640	Fitting–Hydraulic 90˚ (Incl. Ref. #7)	2

Ref. No.	Part No.	Description	No. Used
21	93–0078	Hose–Hydraulic	1
22	237–65	O–Ring	1
23	340–139	Fitting–Hydraulic 90˚ (Incl. Ref. #22 & 26)	1
24	98–9348	Asm–Hose, Pressure #2	1
25	98–9781	Fitting–Hydraulic 90˚ (Incl. Ref. #1 & 9)	1
26	237–81	O–Ring	1
27	98–9347	Asm–Hose, Pressure #3	1
28	322–3	Screw–HH	4
29	3253–4	Washer–Lock	4
30	75–5900	Hose–Hydraulic	1
31	98–9742	Valve–Flow Control	1
32	340–143	Fitting–Hydraulic 90˚ (Incl. Ref. #7)	1
33	93–0118	Hose–Hydraulic	1
35	75–5890	Hose–Hydraulic	1
37	98–4589	Asm–Hose, Pressure #4	1
38	93–3642	Tube–Hydraulic	1
39	93–3643	Tube–Hydraulic	1
40	340–1	Fitting–Hydraulic Straight (Incl. Ref. #3 & 18)	2

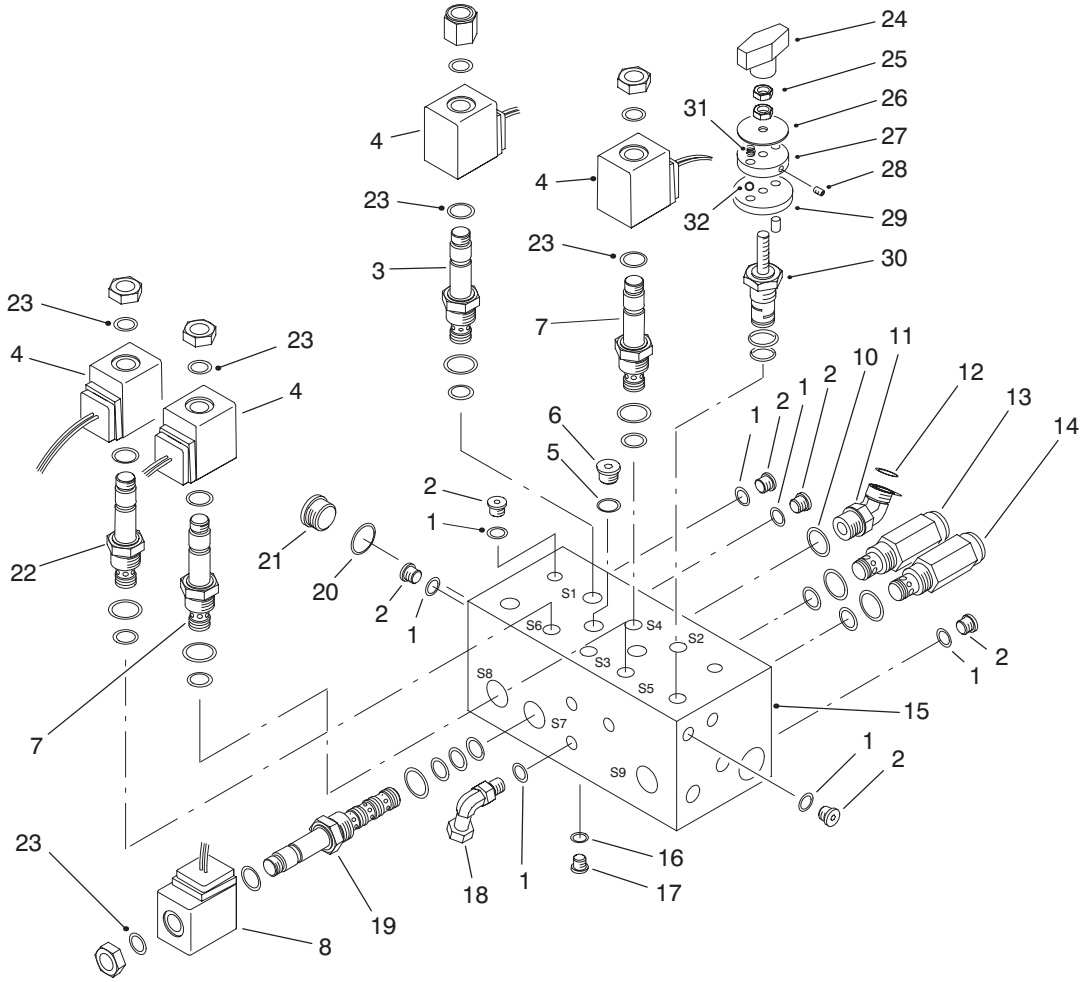

T–1503–3

CONTROL MANIFOLD ASSEMBLY

Ref. No.	Part No.	Description	No. Used
1	237–78	O–Ring	12
2	353–990	Plug (Incl. Ref. #1)	11
3	88–7020	Cartridge–N.O. S1, S2 (Use Seal Kit #95–5645)	2
4	88–9190	Solenoid–20 Watt	6
5	237–42	O–Ring	2
6	353–989	Plug (Incl. Ref. #5)	2
7	94–2685	Cartridge–N.C. S3, S4, S5 (Use Seal Kit #95–5645)	3
8	88–9200	Solenoid–28 Watt	3
10	237–79	O–Ring	1
11	340–101	Fitting–Hydraulic 45° (Incl. Ref. #10 & 12)	1
12	237–30	O–Ring	1
13	75–0920	Cartridge–Relief 3000 psi (Use Seal Kit #95–5645)	1
14	75–2010	Cartridge–Relief 2000 psi (Use Seal Kit #95–5645)	1
†15		Body–Manifold	1
16	237–156	O–Ring	2
17	353–991	Plug (Incl. Ref. #16)	2
18	340–143	Fitting–Hydraulic 90° (Incl. Ref. #1)	1
19	88–6960	Cartridge–4W/2P S7, S8, S9 (Use Seal Kit #95–5642)	3
20	237–80	O–Ring	1
21	354–70	Plug (Incl. Ref. #20)	1
22	92–6315	Cartridge–N.C. S6 (Use Seal Kit #95–5645)	1
23	94–5438	Seal–Solenoid	10
24	94–5020	Knob	2
25	75–6770	Nut–Jam	4
26		Plate–Indicator	2
27	75–6730	Plate–Detent	2
28		Screw–Set	2
29	75–6720	Plate–Locating	2
30	98–9779	Rotary Cartridge Kit (Use Seal Kit #95–5645)	2
31	94–5027	Spring–Detent	2
32		Ball–Detent	2
*	82–8520	Detent Assembly Kit (Incl. Ref. #24–29, 31 & 32)	2
*	95–5645	Kit–Seal	10
*	95–5642	Kit–Seal	3

*Not Illustrated
†Not Serviceable Separately

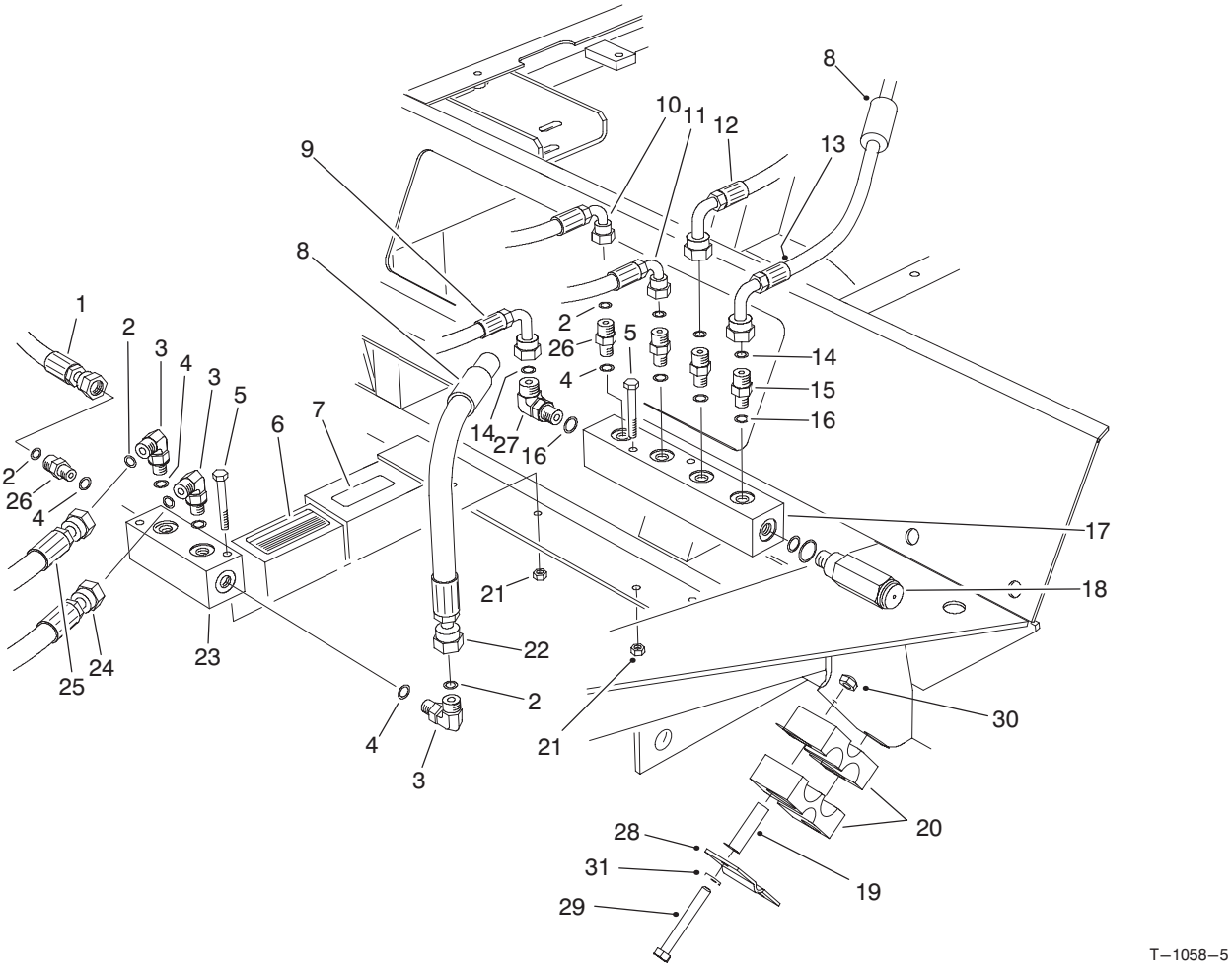

FRONT HYDRAULIC MANIFOLDS

Ref. No.	Part No.	Description	No. Used
1	98−4584	Asm−Hose, Drain	1
2	237−21	O−Ring	7
3	340−132	Fitting−Hydraulic 90˚ (Incl. Ref. #2 & 4)	3
4	237−78	O−Ring	7
5	321−18	Screw−HH	4
6	93−6693	Decal−Floor Plate	1
7	93−6686	Decal−Oil	1
8	38−3400	Guard−Rubber	2
9	75−5940	Hose−Hydraulic	1
10	75−5890	Hose−Hydraulic	1
11	75−5910	Hose−Hydraulic	1
12	93−0118	Hose−Hydraulic	1
13	93−0119	Hose−Hydraulic	1
14	237−22	O−Ring	2
15	340−2	Fitting−Hydraulic Straight (Incl. Ref. #14 & 16)	2
16	237−42	O−Ring	2
17	93−0139	Manifold−Hydraulic	1

Ref. No.	Part No.	Description	No. Used
18	93−0143	Cartridge−Relief 250 psi (Use Seal Kit #75−2080)	1
19	93−7960	Spacer	4
20	82−8170	Clamp−Rubber	4
21	3296−42	Nut−Lock	4
22	92−9096	Hose−Hydraulic	1
23	75−1180	Manifold−Hydraulic	1
24	98−4587	Asm−Hose, Drain #4	1
25	98−4590	Asm−Hose, Drain #1	1
26	340−92	Fitting−Hydraulic Straight (Incl. Ref. #2 & 4)	4
27	340−77	Fitting−Hydraulic 90˚ (Incl. Ref. #14 & 16)	1
28	93−7961	Clamp	2
29	322−13	Screw−HH	4
30	3296−29	Nut−Lock	4
31	3256−70	Washer−Flat	4

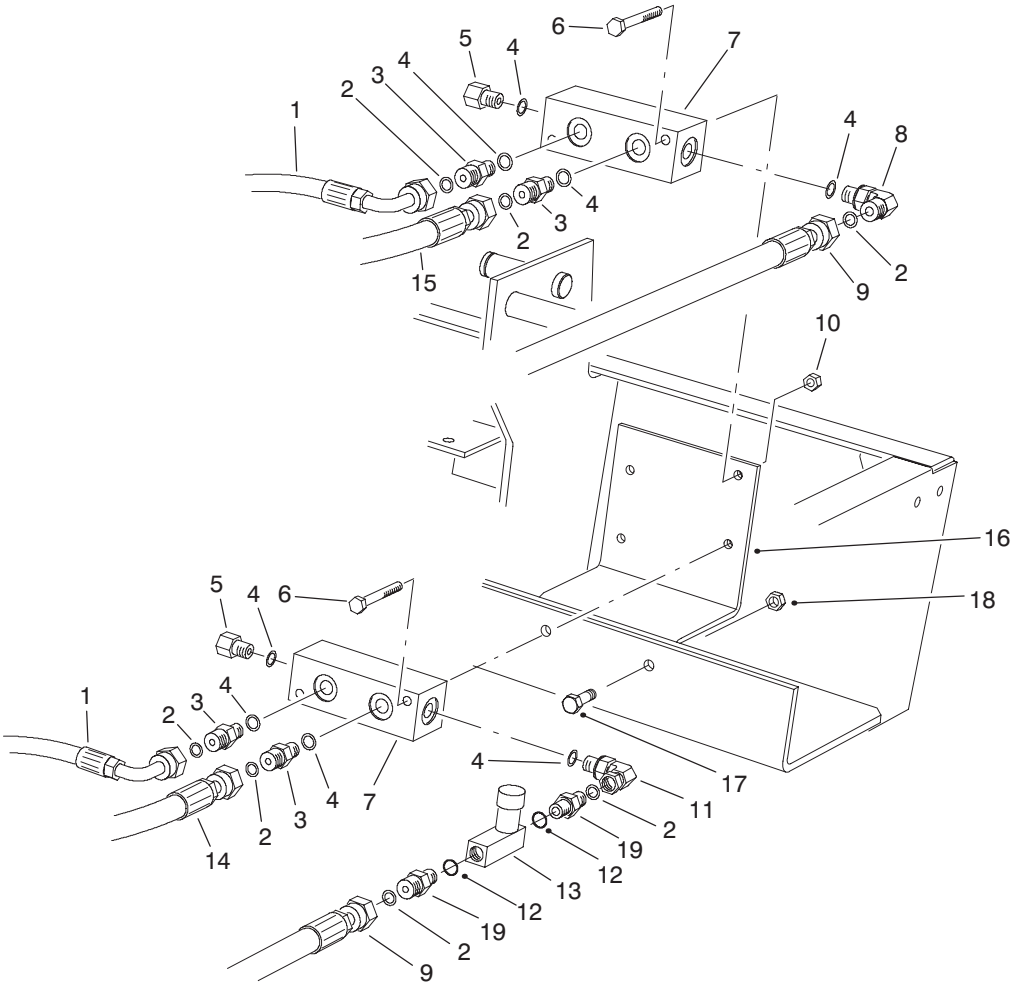

REAR HYDRAULIC MANIFOLDS

Ref. No.	Part No.	Description	No. Used
1	75–6180	Hose–Hydraulic	2
2	237–21	O–Ring	7
3	340–92	Fitting–Hydraulic Straight (Incl. Ref. #2 & 4)	4
4	237–78	O–Ring	8
5	353–512	Fitting–Hydraulic Plug (Incl. Ref. #4)	2
6	321–11	Screw–HH	4
7	75–1180	Manifold	2
8	340–132	Fitting–Hydraulic 90˚ (Incl. Ref. #2 & 4)	1
9	93–0118	Hose–Hydraulic	2

Ref. No.	Part No.	Description	No. Used
10	32128–33	Nut–Lock	4
11	340–143	Fitting–Hydraulic 90˚ (Incl. Ref. #4)	1
12	237–42	O–Ring	2
13	98–9742	Valve–Flow Control	1
14	75–6080	Hose–Hydraulic	1
15	75–6070	Hose–Hydraulic	1
16	94–4920	Plate–Mounting Valve	1
17	322–5	Screw–HH	2
18	32128–20	Nut–Flange Lock	2
19	340–1	Fitting–Hydraulic Straight (Incl. Ref. #2 & 12)	2

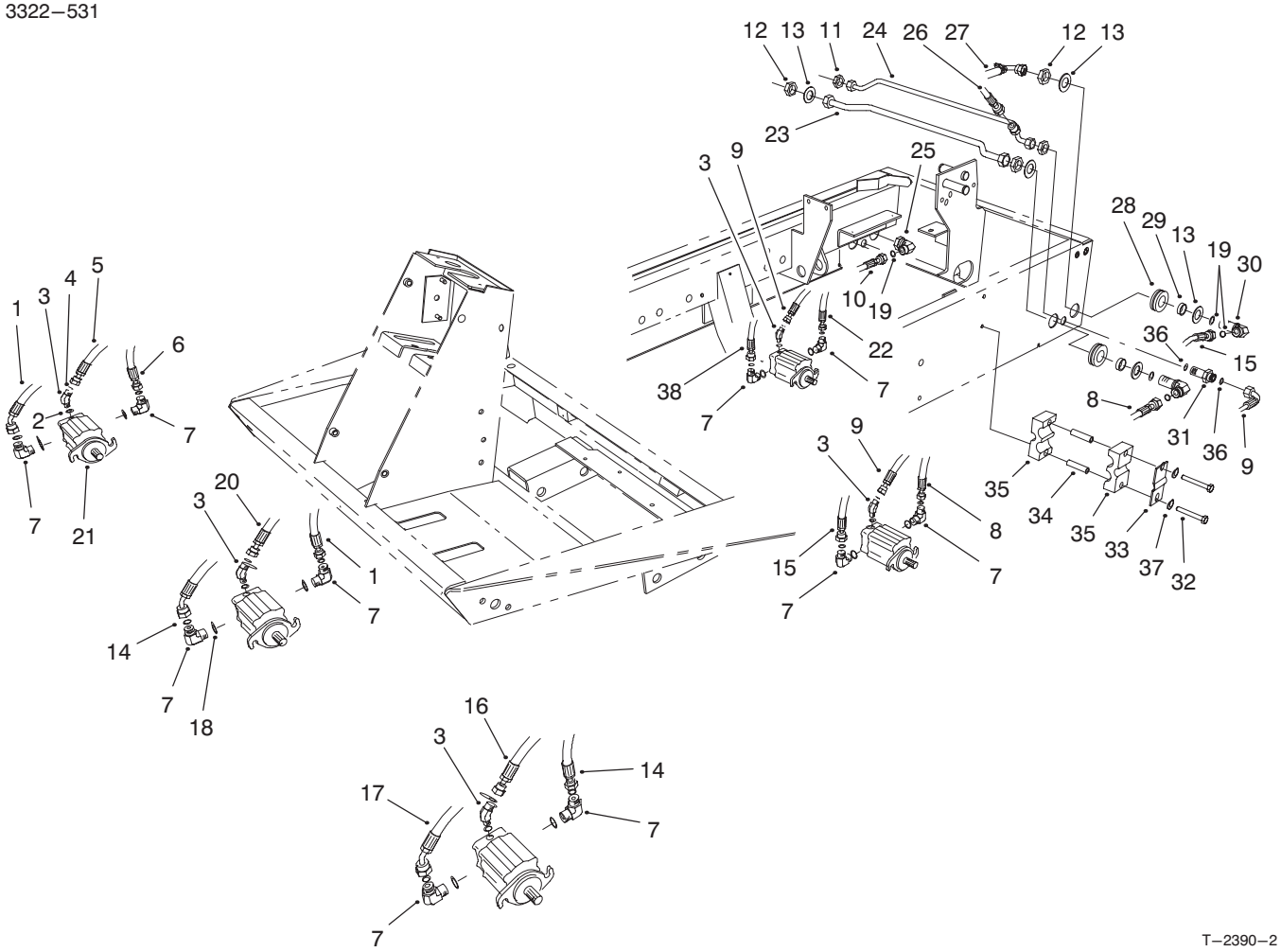

CUTTING UNIT HYDRAULIC COMPONENTS

Ref. No.	Part No.	Description	No. Used
1	98−4585	Asm−Hose, Pressure #1, 5	1
2	237−78	O−Ring	5
3	340−103	Fitting−Hydraulic 45° (Incl. Ref. #2 & 4)	5
4	237−21	O−Ring	5
5	98−4584	Asm−Hose, Drain #5	1
6	98−4586	Asm−Hose, Pressure #5	1
7	340−98	Fitting−Hydraulic 90° (Incl. Ref. #18 & 19)	10
8	98−4581	Asm−Hose, Pressure #2	1
9	98−4583	Asm−Hose, Drain #2, 3	2
10	98−9347	Asm−Hose, Pressure #3	1
11	340−70	Nut−Bulkhead	2
12	340−127	Nut−Bulkhead	4
13	69−8930	Washer−Flat	8
14	98−4588	Asm−Hose, Pressure #1, 4	1
15	98−4582	Asm−Hose, Pressure #2	1
16	98−4587	Asm−Hose, Drain #4	1
17	98−4589	Asm−Hose, Pressure #4	1
18	237−79	O−Ring	10
19	237−30	O−Ring	19
20	98−4590	Asm−Hose, Drain #1	1
21	93−1375	Motor−Hydraulic	5
22	98−9344	Asm−Hose, Hydraulic	1

Ref. No.	Part No.	Description	No. Used
23	94−4918	Asm−Tube, Pressure #2, 3	1
24	94−4917	Asm−Tube, Drain #2, 3	1
25	94−6031	Fitting−Hydraulic (Incl. Ref. #19)	1
26	94−4916	Asm−Hose, Drain, Return	1
27	98−9348	Asm−Hose, Pressure #2	1
28	240−5	Grommet−Rubber	4
29	69−8960	Spacer	4
30	93−9151	Fitting−Hydraulic (Incl. Ref. #19)	4
31	340−71	Fitting−Hydraulic (Incl. Ref. #36)	2
32	32144−58	Screw−HSH	4
33	93−7961	Clamp−Case Drain	2
34	93−7960	Spacer	4
35	82−8170	Clamp	4
36	237−22	O−Ring	4
37	3256−70	Washer−Flat	4
38	98−9343	Asm−Hose, Hydraulic	1
*	3290−378	Tie−Cable	4
*	98−9761	Kit−Hydraulic Hose (Incl. Ref. #1, 6, 8, 14−15 & 17)	1

*Not Illustrated

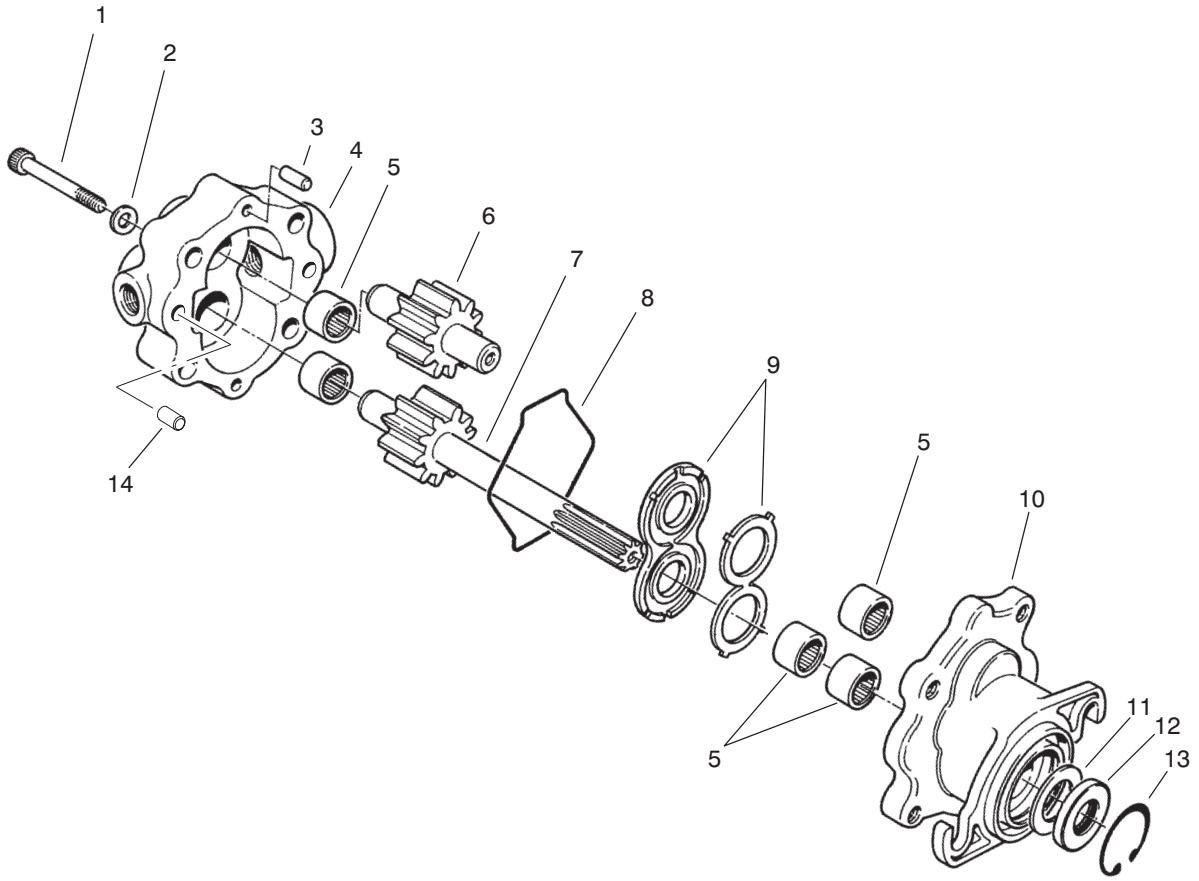

T–1872–1

REEL MOTOR ASSEMBLY NO. 93–1375

Ref. No.	Part No.	Description	No. Used
1	354–50	Screw–HSH	4
2	354–51	Washer	4
3	353–599	Pin–Dowel	2
4	93–3614	Asm–Cover	
		(Incl. Ref. #5)	1
†5		Bearing–Needle	5
6	93–3616	Asm–Idler Gear	1
7	93–3615	Asm–Drive Shaft	1
8	354–46	Ring–Seal	1

Ref. No.	Part No.	Description	No. Used
9	74–3810	Asm–Load Plate	1
10	92–8795	Asm–Body	
		(Incl. Ref. #5)	1
†11		Spacer	1
†12		Seal–Shaft	1
13	32151–41	Ring–Retaining	1
14	92–8796	Pin–Dowel	2
*	92–8863	Kit–Repair	
		(Incl. Ref. #8, & 11–13)	1

*Not Illustrated

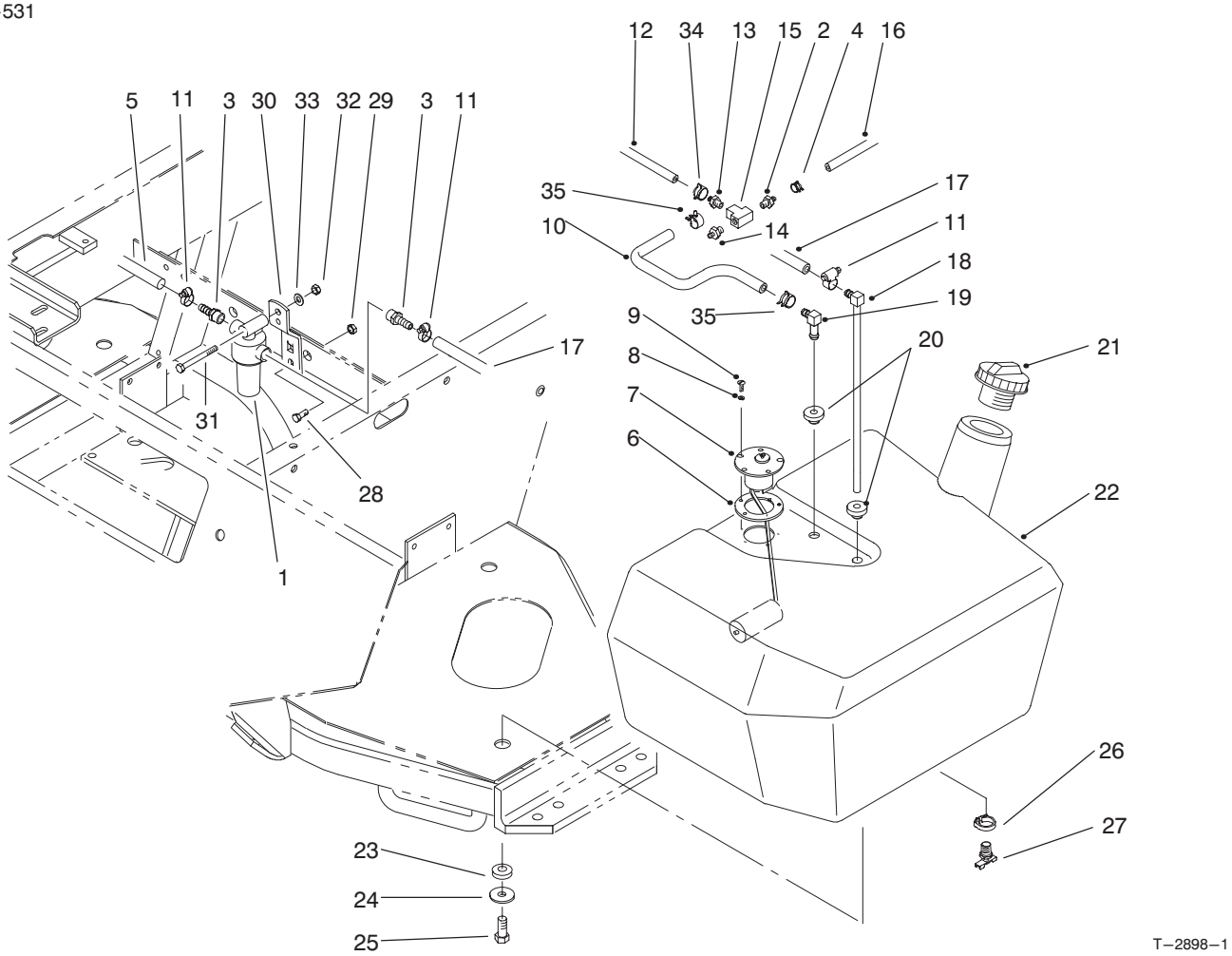

FUEL TANK ASSEMBLY

Ref. No.	Part No.	Description	No. Used
1	99–8351	Filter–Fuel	1
2	304–73	Fitting–Barbed	1
3	353–783	Fitting–Fuel	1
4	2412–98	Clamp–Hose	1
5	63–7610	Hose–Fuel	1
6	62–7650	Gasket–Sending Unit	1
7	63–7640	Unit–Sending	1
8	3253–15	Washer–Lock	5
9	32122–24	Screw–Round Hd.	5
10	93–2042	Hose–Fuel	1
11	2412–108	Clamp–Hose	4
12	75–4700	Hose–Fuel	1
13	354–22	Fitting–Fuel, Straight	1
14	354–21	Fitting–Fuel Straight	1
15	354–20	Fitting–Fuel Tee	1
16	98–9338	Hose–Fuel	1
17	95–4276	Hose–Fuel	1
18	66–8121	Standpipe–Elbow 90°	1

Ref. No.	Part No.	Description	No. Used
19	46–6550	Connector–Fuel, Elbow 90°	1
20	46–6560	Grommet	2
21	93–3102	Cap–Fuel Tank	1
22	94–3510	Asm–Fuel Tank (Incl. Ref. #26–27)	1
23	240–11	Grommet	3
24	63–8410	Washer–Flat	3
25	33103–025	Screw–HHF	3
26	2412–36	Clamp–Drain	1
27	304–46	Fitting–Drain	1
28	322–4	Screw–HH	1
29	3296–29	Nut–Lock	1
30	98–9748	Support–Bracket, Filter	1
31	321–8	Screw–HH	1
32	3296–42	Nut–Lock	1
33	3256–22	Washer–Flat	1
34	2412–146	Clamp–Spring	2
35	92–2379	Clamp	2

*Not Illustrated
†Not Serviced Separately

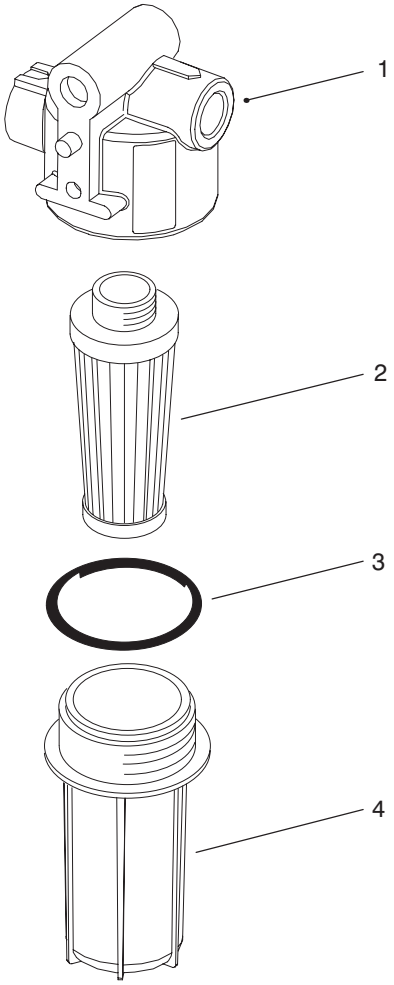

T−3100

FUEL FILTER ASSEMBLY

Ref. No.	Part No.	Description	No. Used
1	99−8356	Kit−Head W/Label	1
2	99−8358	Kit−Element (Incl. Ref. 33)	1

Ref. No.	Part No.	Description	No. Used
3	99−8359	O−Ring	1
4	99−8357	Kit−Bowel (Incl. Ref. #3)	1

3322–531

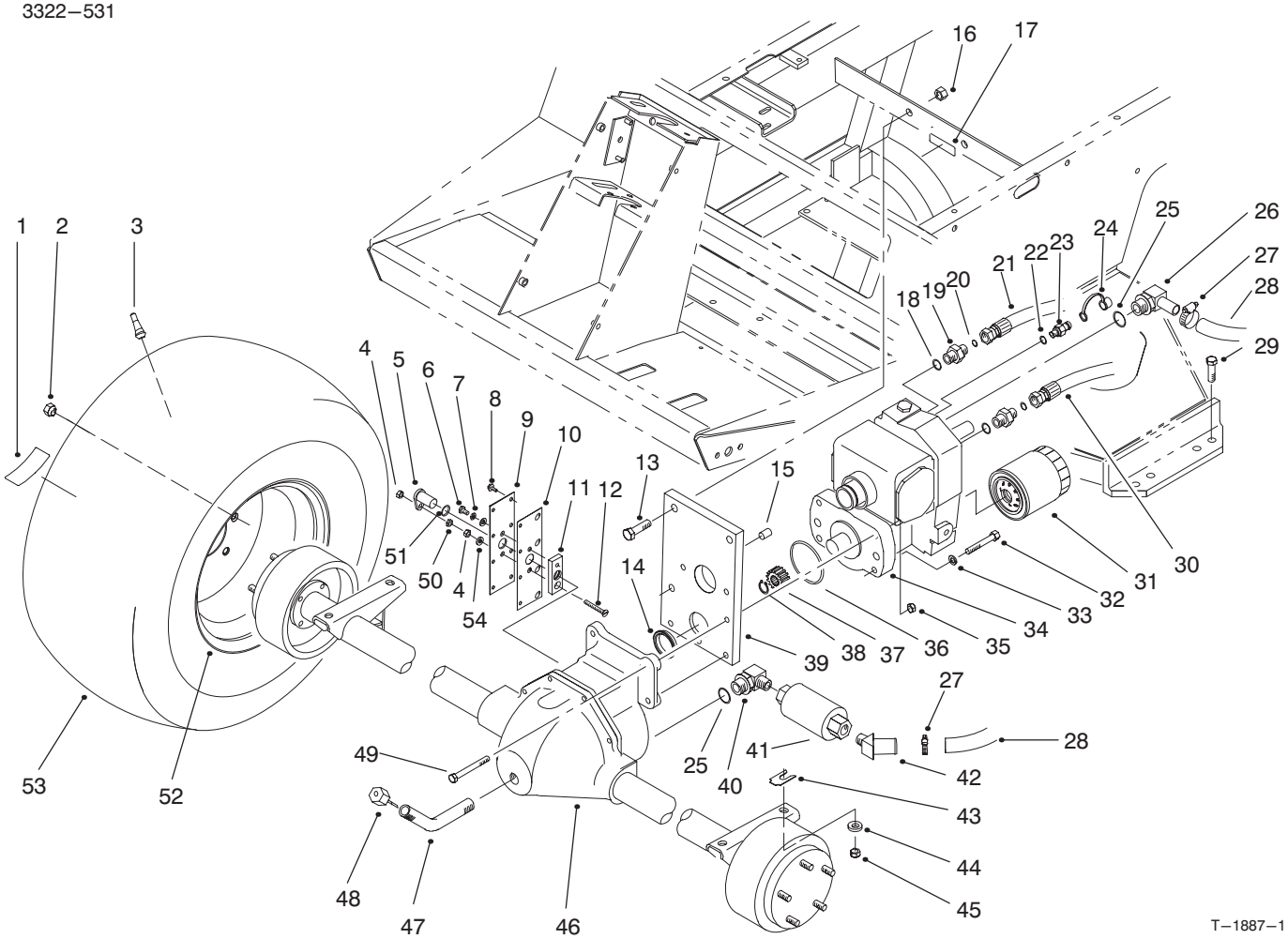

FRONT AXLE & TRANSMISSION ASSEMBLY

Ref. No.	Part No.	Description	No. Used
1	76–8730	Decal–Bolt Torque	2
2	23–7270	Nut–Lug	10
3	232–27	Stem–Valve	2
4	3296–56	Nut–Lock	2
5	85–4350	Sensor–Gear Tooth	1
6	321–2	Screw–HH	1
7	3253–3	Washer–Lock	1
8	32144–112	Screw–HH	8
9	85–4330	Cover–Gear	1
10	92–5797	Gasket–Axle	1
11	85–4340	Plate–Sensor Mounting	1
12	32108–9	Screw–Machine	1
13	325–7	Screw–HH	2
14	75–3110	Collar–Transmission	1
15	92–4808	Sleeve–Trans. Pilot	1
16	3296–23	Nut–Lock	2
17	93–6691	Decal–Bolt	1
18	237–79	O–Ring	2
19	340–3	Fitting–Hydraulic, Straight (Incl. Ref. #18 & 20)	2
20	237–22	O–Ring	2
21	93–0076	Hose–Hydraulic	1
22	237–78	O–Ring	1
23	354–77	Fitting–Hydraulic Test Port (Incl. Ref. #22)	1
24	354–79	Cap–Test Port	1

Ref. No.	Part No.	Description	No. Used
25	237–81	O–Ring	2
26	75–4720	Fitting–Hydraulic 90° (Incl. Ref. #25)	1
27	2412–129	Clamp–Hose	2
28	75–6350	Hose	1
29	324–7	Screw–HH	4
30	93–0075	Hose–Hydraulic	1
31	75–1330	Filter–Oil	1
32	323–12	Screw–HH	2
33	3253–21	Washer–Lock	2
34	75–0012	Asm–Transmission	1
35	3296–39	Nut–Lock	2
36	237–161	O–Ring	1
37	86–7220	Gear–Pinion	1
38	32151–62	Ring–Retaining	1
39	92–4846	Asm–Trans. Support (Incl. Ref. #14 & 15)	1
40	354–75	Fitting–Hydraulic 90° (Incl. Ref. #25)	1
41	75–6340	Strainer–In–Line	1
42	354–72	Fitting–Hydraulic 45°	1
43	42–6080	Shim–Axle	A/R
44	66–6480	Washer–Flat	4
45	3296–48	Nut–Lock	4
46	94–6933	Asm–Front Axle	1
47	75–6850	Tube–Oil Fill	1

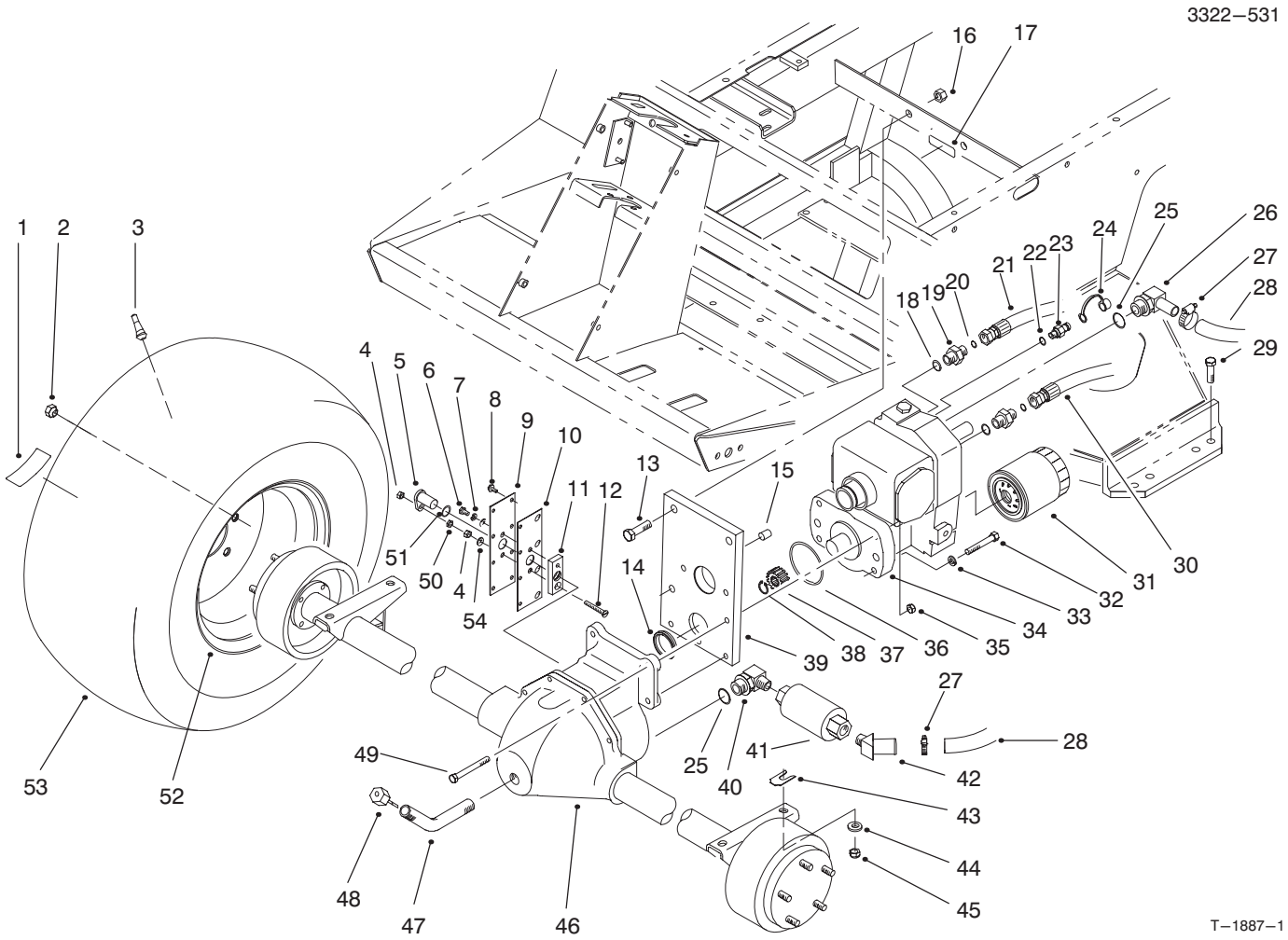

FRONT AXLE & TRANSMISSION ASSEMBLY (Continued)

Ref. No.	Part No.	Description	No. Used
48	27–3710	Dipstick–Axle	1
49	323–20	Screw–HH	2
50	3218–1	Nut–Jam	1
51	237–181	O–Ring	1

Ref. No.	Part No.	Description	No. Used
52	217–120	Rim	2
53	231–134	Tire	2
54	3256–22	Washer–Flat	2

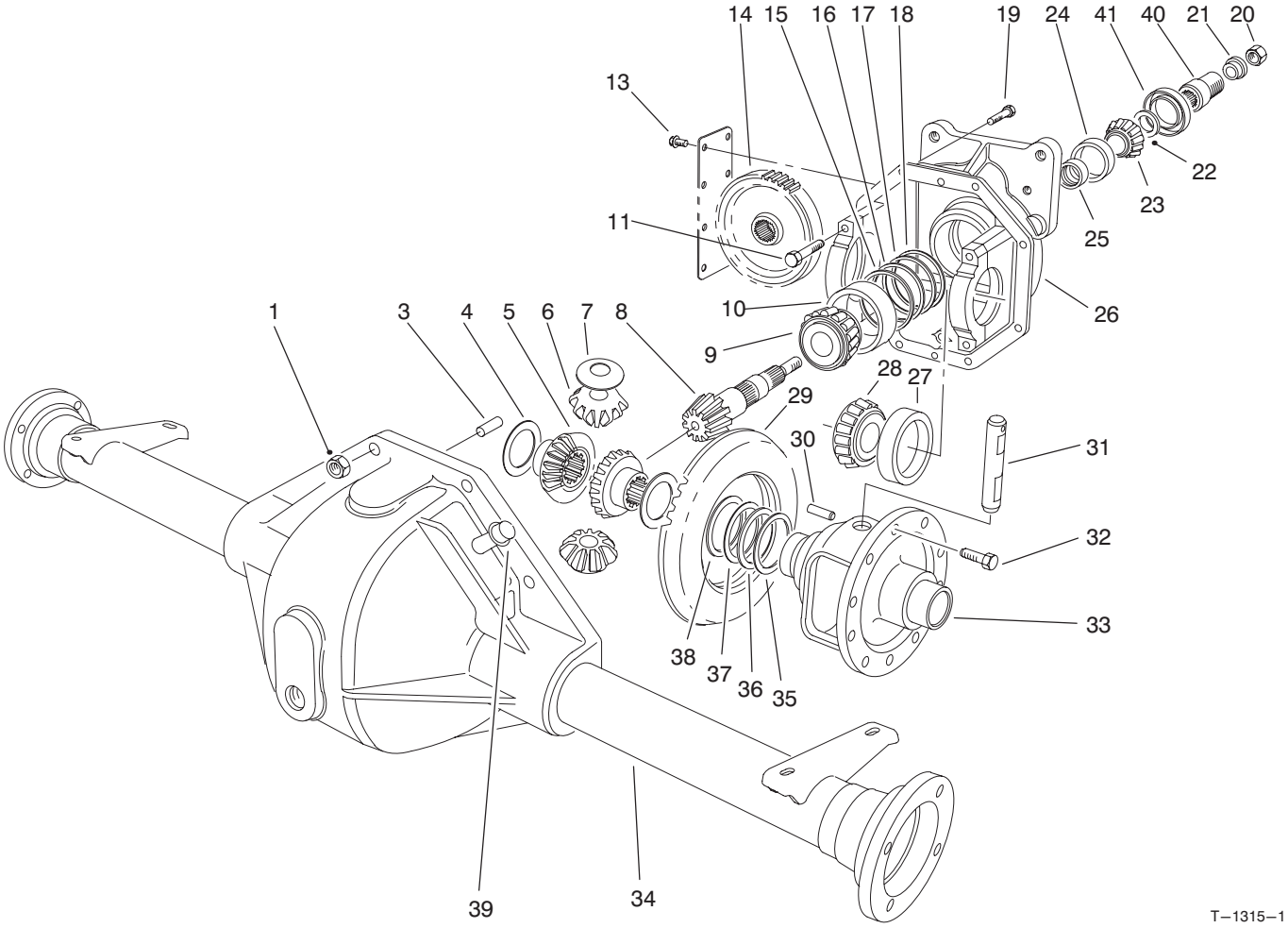

FRONT AXLE ASSEMBLY NO. 94–6933

Ref. No.	Part No.	Description	No. Used
1	32144–5	Nut	8
3	21–8270	Pin–Dowel	2
4	21–7720	Washer–Thrust	2
5	24–8790	Gear–Bevel, Differential	2
6	21–7690	Gear–Pinion	2
7	21–7730	Washer–Thrust	2
†8		Pinion–Drive	1
9	43–6760	Cone–Bearing, tapered	1
10	43–6750	Cup–Bearing, Tapered	1
11	92–1773	Screw–HH	4
13	32144–112	Screw–Thread Forming	8
14	86–7230	Gear–Spur	1
15	43–6710	Diff. Adjust. Shim .003	A/R
16	43–6711	Diff. Adjust. Shim .005	A/R
17	43–6712	Diff. Adjust. Shim .010	A/R
18	43–6713	Diff. Adjust. Shim .030	A/R
19	3210–8	Screw–HH	8
20	71–4350	Nut	1
21	83–5130	Spacer–Pinion	1
22	72–3570	Shim .094–Diff. Adjust.	A/R
*	72–3571	Shim .096–Diff. Adjust.	A/R
*	72–3572	Shim .098–Diff. Adjust.	A/R
22	72–3573	Shim .100–Diff. Adjust.	A/R

Ref. No.	Part No.	Description	No. Used
*	72–3574	Shim .102–Diff. Adjust.	A/R
*	72–3575	Shim .104–Diff. Adjust.	A/R
*	72–3576	Shim .106–Diff. Adjust.	A/R
*	72–3577	Shim .108–Diff. Adjust.	A/R
*	72–3578	Shim .110–Diff. Adjust.	A/R
*	72–3580	Shim .112–Diff. Adjust.	A/R
*	72–3581	Shim .114–Diff. Adjust.	A/R
*	72–3582	Shim .116–Diff. Adjust.	A/R
*	72–3583	Shim .118–Diff. Adjust.	A/R
*	72–3584	Shim .120–Diff. Adjust.	A/R
*	72–3585	Shim .125–Diff. Adjust.	A/R
*	72–3586	Shim .127–Diff. Adjust.	A/R
*	72–3587	Shim .129–Diff. Adjust.	A/R
*	72–3588	Shim .131–Diff. Adjust.	A/R
*	72–3590	Shim .133–Diff. Adjust.	A/R
*	72–3591	Shim .135–Diff. Adjust.	A/R
*	72–3592	Shim .137–Diff. Adjust.	A/R
*	72–3593	Shim .139–Diff. Adjust.	A/R
*	72–3594	Shim .141–Diff. Adjust.	A/R
*	72–3595	Shim .143–Diff. Adjust.	A/R
*	72–3596	Shim .145–Diff. Adjust.	A/R
*	72–3597	Shim .147–Diff. Adjust.	A/R
*	72–3598	Shim .149–Diff. Adjust.	A/R

*Not Illustrated
†Not Serviced Separately

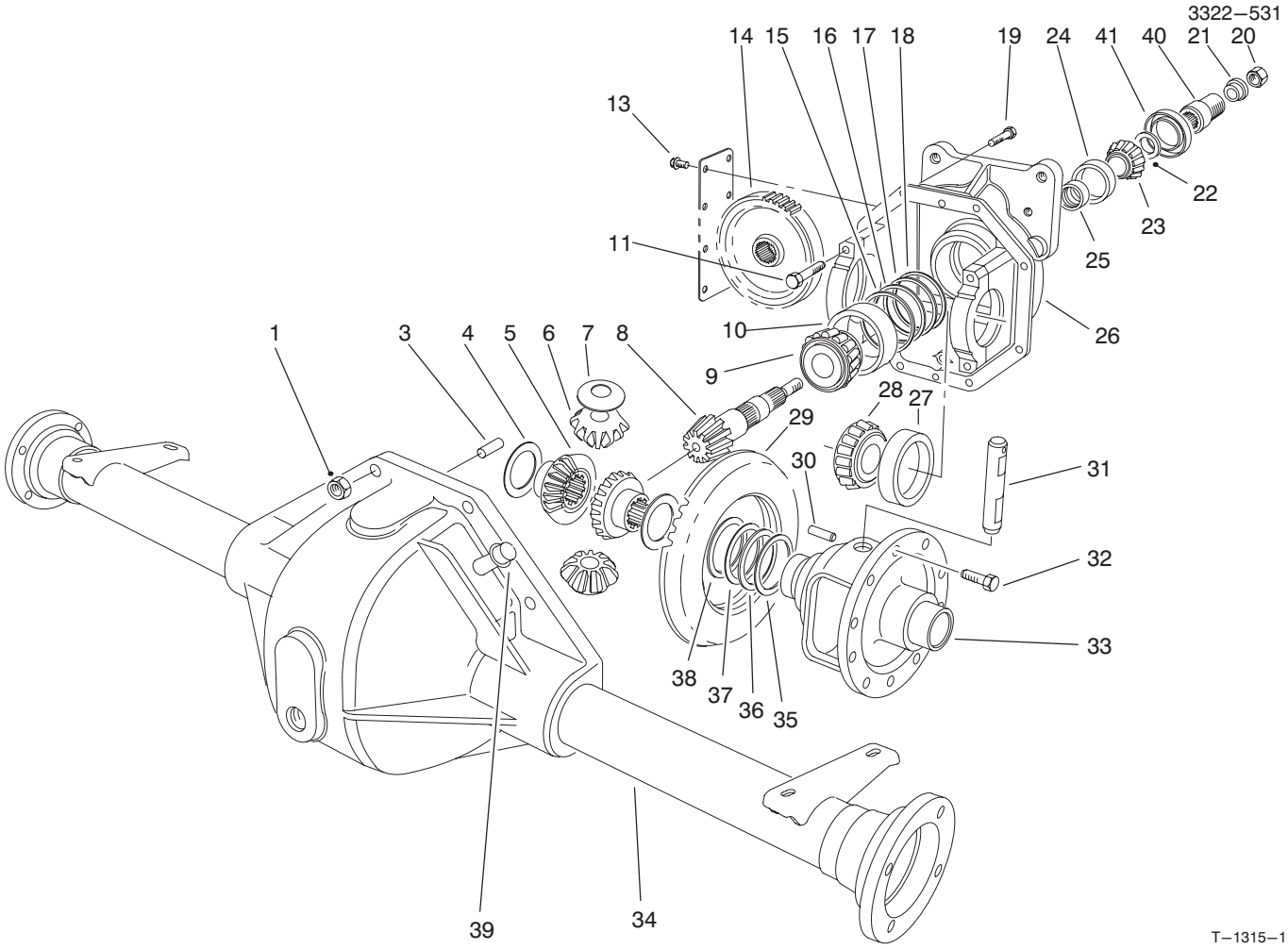

FRONT AXLE ASSEMBLY NO. 94–6933 (Continued)

Ref. No.	Part No.	Description	No. Used
22	72–3600	Shim .151–Diff. Adjust.	A/R
23	254–91	Cone–Bearing	1
24	21–8390	Cup–Bearing	1
25	21–8020	Spacer–Front Pinion	1
26	93–3619	Upper Housing (Incl. Ref. #11)	1
27	254–66	Cup–Tapered Bearing	2
28	254–65	Cone–Tapered Bearing	2
†29		Gear–Ring	1
30	21–7710	Pin–Roll	1
31	21–7700	Shaft–Pinion Mate	1
32	21–7770	Screw–Drive Gear	5
33	21–7670	Case–Differential	1

Ref. No.	Part No.	Description	No. Used
34	75–0721	Housing–Lower	1
35	21–8120	Diff. Adjust. Shim .030	A/R
36	21–8110	Diff. Adjust. Shim .010	A/R
37	21–8100	Diff. Adjust. Shim .005	A/R
38	21–8090	Diff. Adjust. Shim .003	A/R
39	72–9420	Asm–Vent Tube	1
40	83–4910	Coupler–Pinion	1
41	71–4330	Seal	1
*	93–3618	Asm–Gear & Pinion (Incl. Ref. #8 & 29)	1
*	93–3617	Asm–Differential (Incl. Ref. #4–10, 14–33, 35–38, 40 & 41)	1

*Not Illustrated
†Not Serviced Separately

3322–531

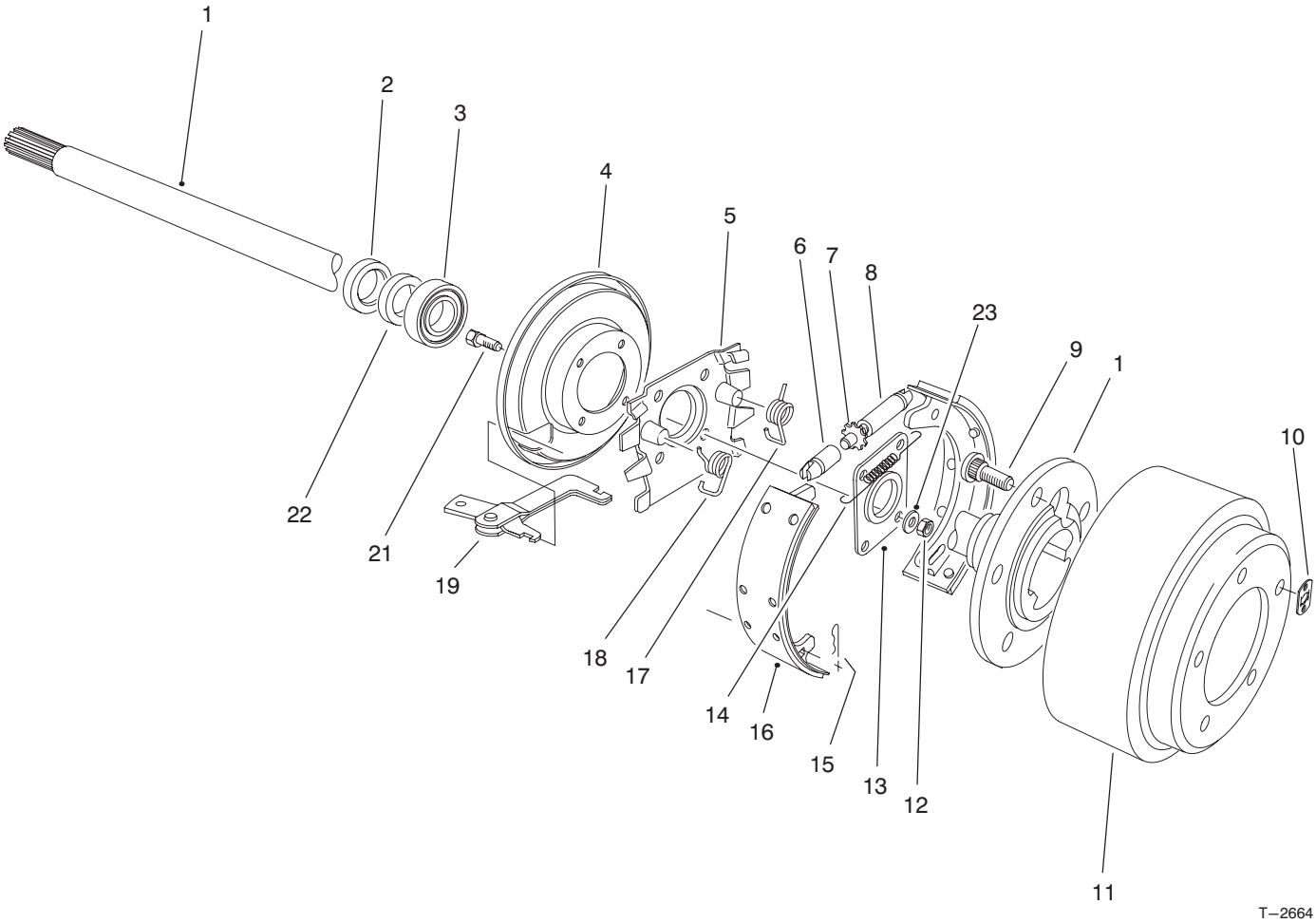

BRAKE ASSEMBLY

Ref. No.	Part No.	Description	No. Used
1	27–6862	Shaft–Axle, Flanged LH	1
*	27–6852	Shaft–Axle, Flanged RH	1
2	99–6969	Seal–Oil	2
3	21–8180	Bearing	2
4	21–9450	Shield–Dust	2
5	43–6810	Spider–Torque	2
6	21–9390	Socket–Adjusting Screw	2
7	21–9370	Screw–Adjusting	2
8	21–9380	Nut–Pivot	2
9	242–34	Stud–Flange, Axle	10
10	21–8360	Clip–Retaining	2
11	28–0680	Drum–Brake	2
12	94–6935	Nut–Lock	8

Ref. No.	Part No.	Description	No. Used
13	28–0670	Seal–Oil	2
14	21–9440	Spring–Adjusting Screw	2
15	21–9460	Retainer–Brake, Parking	4
16	84–8590	Asm–Shoe & Lining	4
17	21–9420	Spring–Shoe Return, LH	2
18	21–9430	Spring–Shoe Return, RH	2
19	24–9180	Lever, Brake, Parking	2
21	94–6934	Screw–HSH	8
22	24–8840	Ring–Bearing, Wheel	2
23	94–6936	Washer–Flat	8
*	84–8600	Set of Lined Brake Shoes	1
*	92–8775	Kit–Gasket, Liquid	1

*Not Illustrated

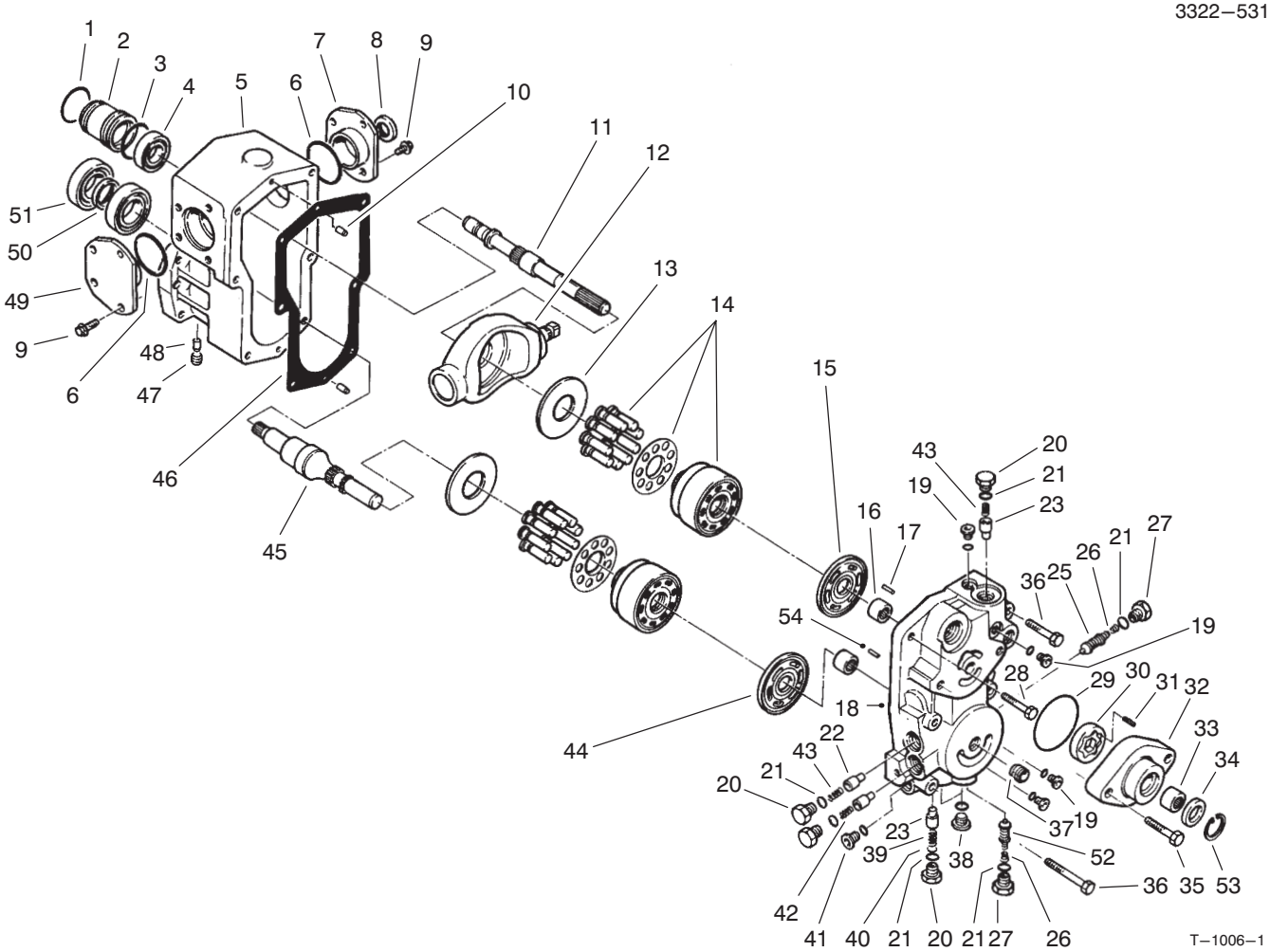

TRANSMISSION ASSEMBLY NO. 75–0012

Ref. No.	Part No.	Description	No. Used
1	75–0430	Ring–Retaining	1
2	75–0150	Guide–Seal	1
3	75–0410	O–Ring	1
4	75–0520	Bearing–Ball	1
5	75–0020	Housing	1
6	75–0210	O–Ring	2
7	86–7520	Asm–Trunnion Cover RH	1
8	75–0230	Seal–Lip	1
9	75–0090	Screw–HH	8
10	75–0480	Pin	2
11	86–7540	Shaft–Pump	1
12	75–0390	Plate–Swash	1
13	75–0400	Plate–Thrust	2
14	75–0470	Kit–Cylinder Block	2
15	75–0380	Plate–Valve	1
16	75–0500	Bearing–Needle	2
17	75–0510	Pin	1
18	75–0040	Center Section	1
19	75–0170	Plug–Straight Thread	4
20	75–0060	Plug	4
21	75–0240	O–Ring	6
22	75–0290	Spring	2
23	75–0260	Valve–Relief	4
24	75–0130	Screw–HH	3
25	93–0097	Valve–SCR	1
26	75–0140	Spring–Conical	1
27	75–0190	Plug–Special	2

Ref. No.	Part No.	Description	No. Used
28	75–0120	Screw–HH	1
29	75–0370	O–Ring	1
30	75–0360	Gerotor	1
31	75–0350	Pin	1
32	83–4780	Housing–Charge Pump	1
33	75–0340	Bearing–Needle	1
34	75–0330	Seal–Lip	1
35	75–0110	Screw–HH	2
36	75–0180	Screw–HH	2
37	75–0320	Nipple	1
38	75–0200	Plug–Straight Thread	2
39	75–0270	Spring	1
40	75–0310	Shim	1
41	75–0070	Plug	1
42	75–0280	Spring	1
44	93–0083	Plate–Valve	1
45	75–0440	Shaft–Motor	1
46	75–0030	Gasket–Housing	1
47	75–0160	Plug–Pipe	1
48	75–0220	Pin	2
49	86–7530	Asm–Trunnion Cover LH	1
50	75–0450	Collar	1
51	75–0460	Bearing–Ball	2
52	75–6930	Valve–SCR	1
53	32120–74	Ring–Retaining	1
54	75–0250	Pin–Slotted	1

*Not Illustrated

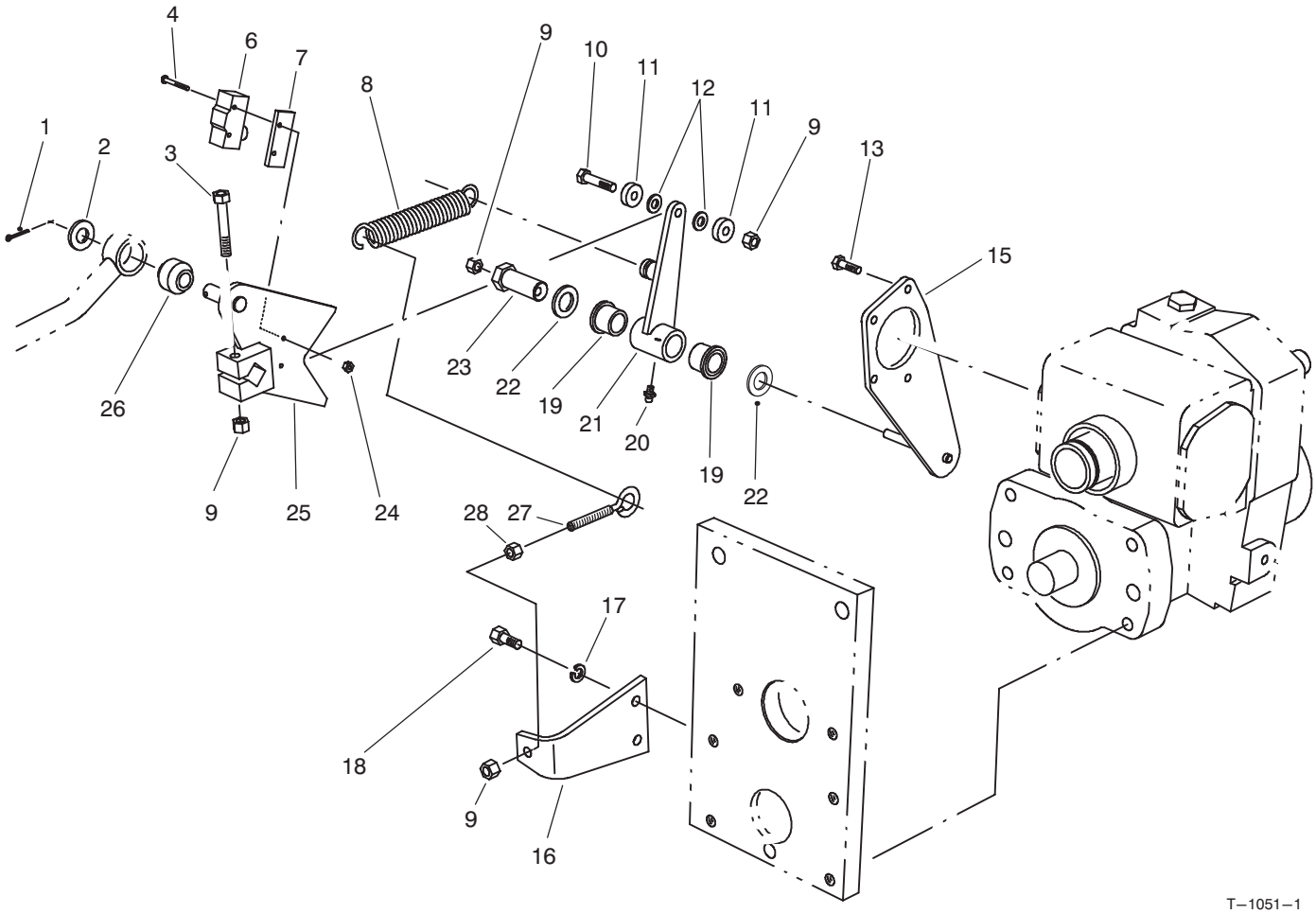

TRACTION CONTROL ASSEMBLY

Ref. No.	Part No.	Description	No. Used
1	3272–10	Pin–Cotter	1
2	3256–26	Washer–Flat	1
3	322–10	Screw–HH	1
4	32105–21	Screw	2
6	29–6162	Switch–Neutral	1
7	75–4130	Plate–Switch	1
8	76–9430	Spring–Extension	1
9	3296–29	Nut–Lock	4
10	322–7	Screw–HH	1
11	251–259	Bearing–Ball	2
12	75–5470	Spacer	2
13	32144–22	Screw–HH	4
15	75–4080	Plate–Traction	1
16	85–9900	Plate–Spring Anchor	1

Ref. No.	Part No.	Description	No. Used
17	3253–4	Washer–Lock	2
18	322–3	Screw–HH	2
19	256–113	Bushing–Flange	2
20	302–5	Fitting–Grease	1
21	92–2581	Asm–Switch Arm (Incl. Ref. #19 & 20)	1
22	3–6498	Washer–Thrust	2
23	76–8640	Stud–Traction	1
24	3296–9	Nut–Hex.	2
25	75–4100	Control–Pump	1
26	23–2270	Bushing–Rubber	1
27	85–9910	Eyebolt	1
28	3217–6	Nut–Hex.	1

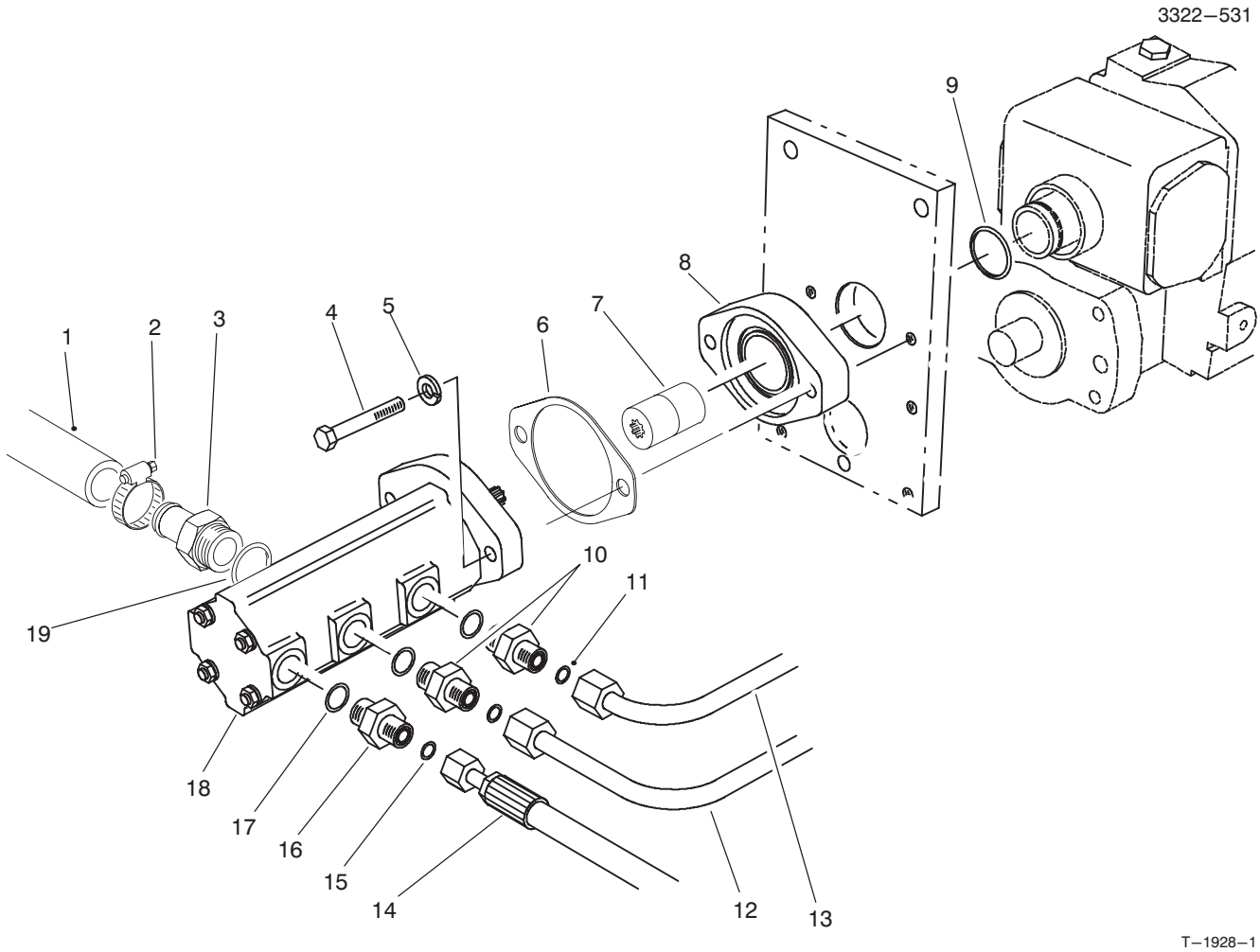

GEAR PUMP INSTALLATION ASSEMBLY

Ref. No.	Part No.	Description	No. Used
1	75–6870	Hose–Suction	1
2	2412–34	Clamp–Hose	1
3	354–78	Fitting–Hydraulic (Incl. Ref. #19)	1
4	323–12	Screw–HH	2
5	3253–5	Washer–Lock	2
6	93–3604	Gasket	1
7	93–1396	Coupler–Trans.	1
8	75–4400	Adaptor–Transmission	1
9	237–163	O–Ring	1
10	340–4	Fitting–Hydraulic Straight (Incl. Ref. #11 & 17)	2

Ref. No.	Part No.	Description	No. Used
11	237–30	O–Ring	2
12	93–3643	Tube–Hydraulic	1
13	93–3642	Tube–Hydraulic	1
14	75–6240	Hose–Hydraulic	1
15	237–22	O–Ring	1
16	340–3	Fitting–Hydraulic Straight (Incl. Ref. #15 & 17)	1
17	237–79	O–Ring	3
18	98–9796	Asm–Pump, Gear	1
19	237–146	O–Ring	1

3322–531

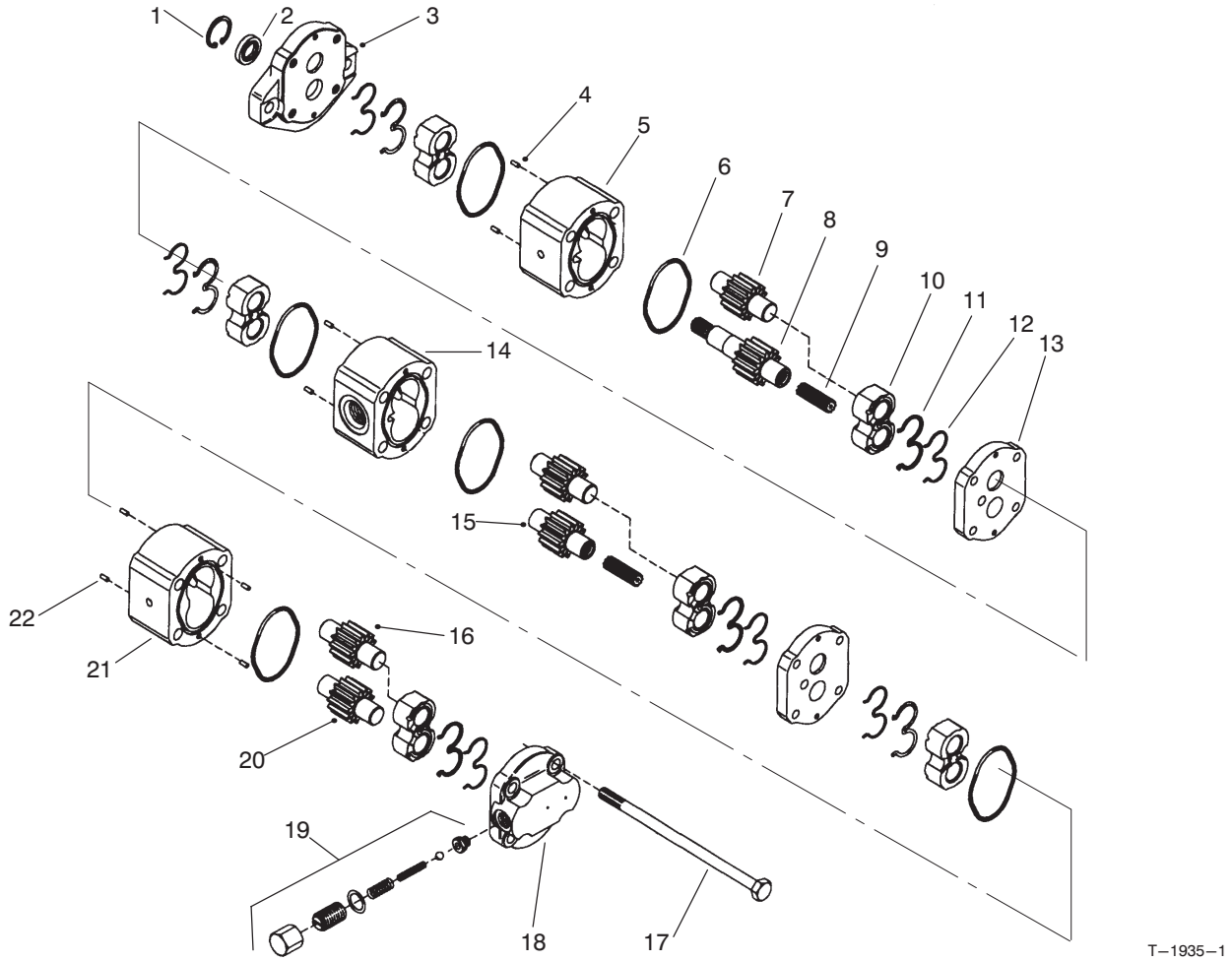

HYDRAULIC PUMP NO. 98–9796

Ref. No.	Part No.	Description	No. Used
1		Ring–Retaining	1
2		Seal–Shaft	1
3		Flange	1
4	93–4278	Pin–Dowel	4
5		Housing	1
6		O–Ring	2
7		Gear–Idler	1
8		Gear–Drive	1
9	93–4280	Coupling	2
10		Bearing	2
11		E–Seal	2
12		Ring–Backup	2
13	93–4279	Plate–Distance	2
14		Housing	1
15		Gear–Idler	1
16		Gear–Idler	1
17	93–4283	Bolt	4

Ref. No.	Part No.	Description	No. Used
18	93–4282	Block–Valve	1
19	93–4277	Kit–Valve	1
20		Gear–Idler	1
21		Housing	1
22	93–4281	Pin–Dowel	4
*	93–4268	Kit–Flange (Incl. Ref. #1–3)	1
*	98–9798	Kit–Housing, Section 1 (Incl. Ref. #6, 7, 10–12, 14 & 15)	1
*	98–9797	Kit–Housing, Section 2 (Incl. Ref. #5–8, & 10–12)	1
*	98–9799	Kit–Housing, Section 3 (Incl. Ref. #6,10–12, 16, & 20–21)	1
*	99–8353	Kit–Individual Pieces (Incl. Ref. #2, 6, 11, & 12)	1

*Not Illustrated

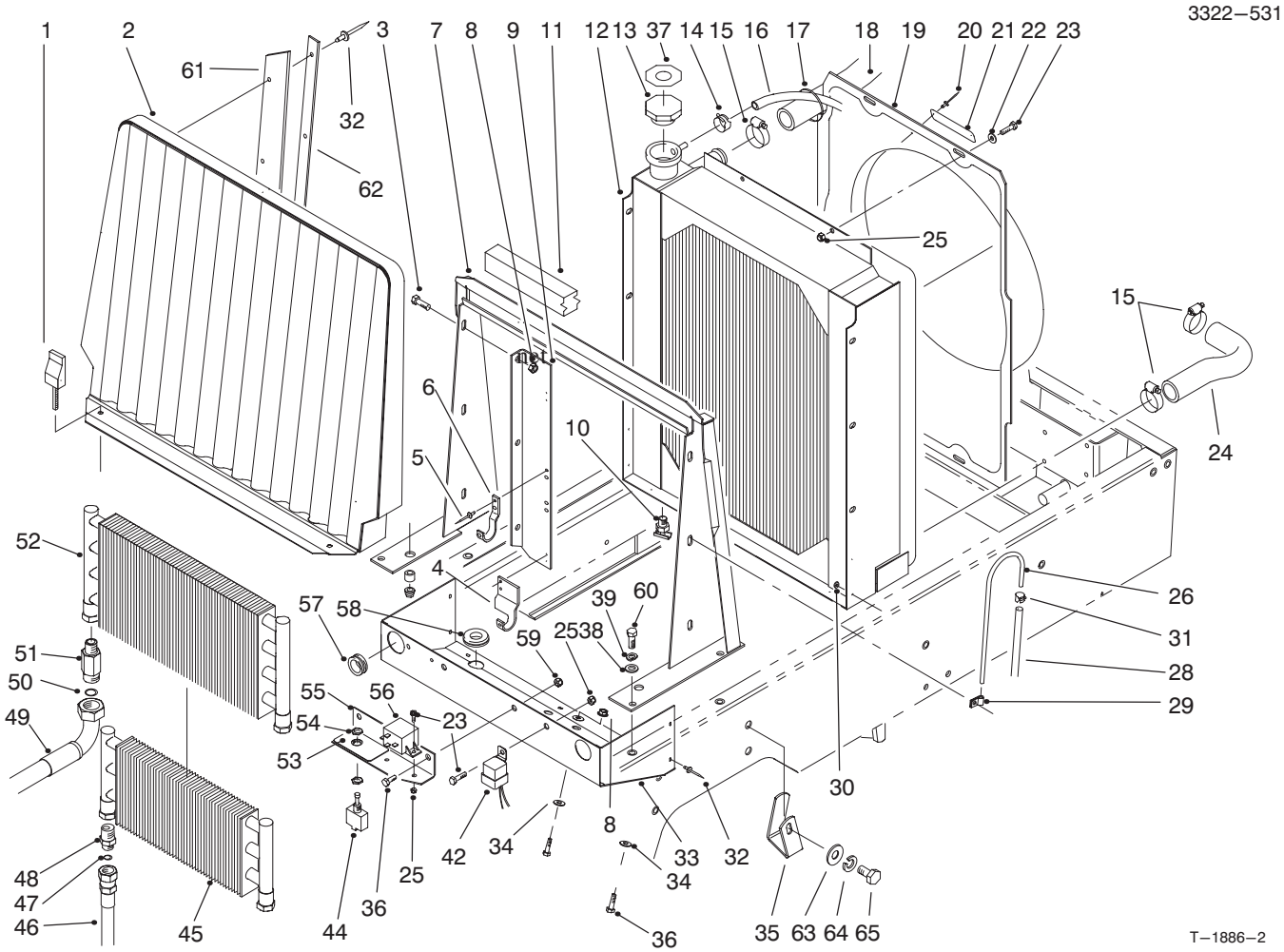

RADIATOR ASSEMBLY

Ref. No.	Part No.	Description	No. Used
1	93–1374	Latch–Swell	2
2	93–0032	Housing–Front Screen	1
3	3234–5	Screw–Whiz Lock	6
4	93–0090	Bracket–Mount RH, Cooler	1
*4	93–0089	Bracket–Mount LH, Cooler	1
5	3269–15	Rivet–Pop	8
6	75–0930	Hook–Oil Cooler	4
7	98–9317	Support–Radiator	1
8	32128–20	Nut–Whiz	8
9	93–0030	Asm–Cooler Mount RH (Incl. Ref. #4–6)	1
*	93–0071	Asm–Cooler Mount LH (Incl. Ref. #*4–6)	1
10	304–46	Drain–Radiator	1
11	93–0005	Strip–Foam, Top	1
12	98–4507	Radiator	1
13	66–3240	Cap–Radiator	1
14	92–2379	Clamp–Hose	1
15	2412–34	Clamp–Hose	4
16	75–2851	Hose–Expansion Tank	1
17	3290–378	Tie–Cable	1
18	98–4511	Hose–Radiator Upper	1
19	98–4571	Shroud–Fan	1
20	3290–271	Rivet–Pop	2

Ref. No.	Part No.	Description	No. Used
21	98–9335	Plate–Caution	1
22	3256–22	Washer–Flat	4
23	321–4	Screw–HH	7
24	98–4508	Hose–Radiator Lower	1
25	3296–42	Nut–Lock	7
26	66–3180	Tube–Vent	1
28	75–4701	Hose–Fuel Vent	1
29	2412–103	Clamp–R	2
30	3269–10	Washer–Back–up	5
31	2412–98	Clamp–Hose	1
32	3269–13	Rivet–Pop	15
33	93–0025	Shield–Radiator	1
34	3256–2	Washer–Flat	4
35	98–4591	Clamp–Hose LH	1
*	98–4592	Clamp–Hose RH	1
36	322–2	Screw–HH	4
37	93–7840	Decal–Radiator Cap	1
38	3256–23	Washer–Flat	4
39	3253–4	Washer–Lock	4
42	63–7590	Relay–Starter	1
44	99–8352	Switch–Backlap (Incl. Ref. #54)	1
45	24–0760	Exchanger–Heat	1

*Not Illustrated

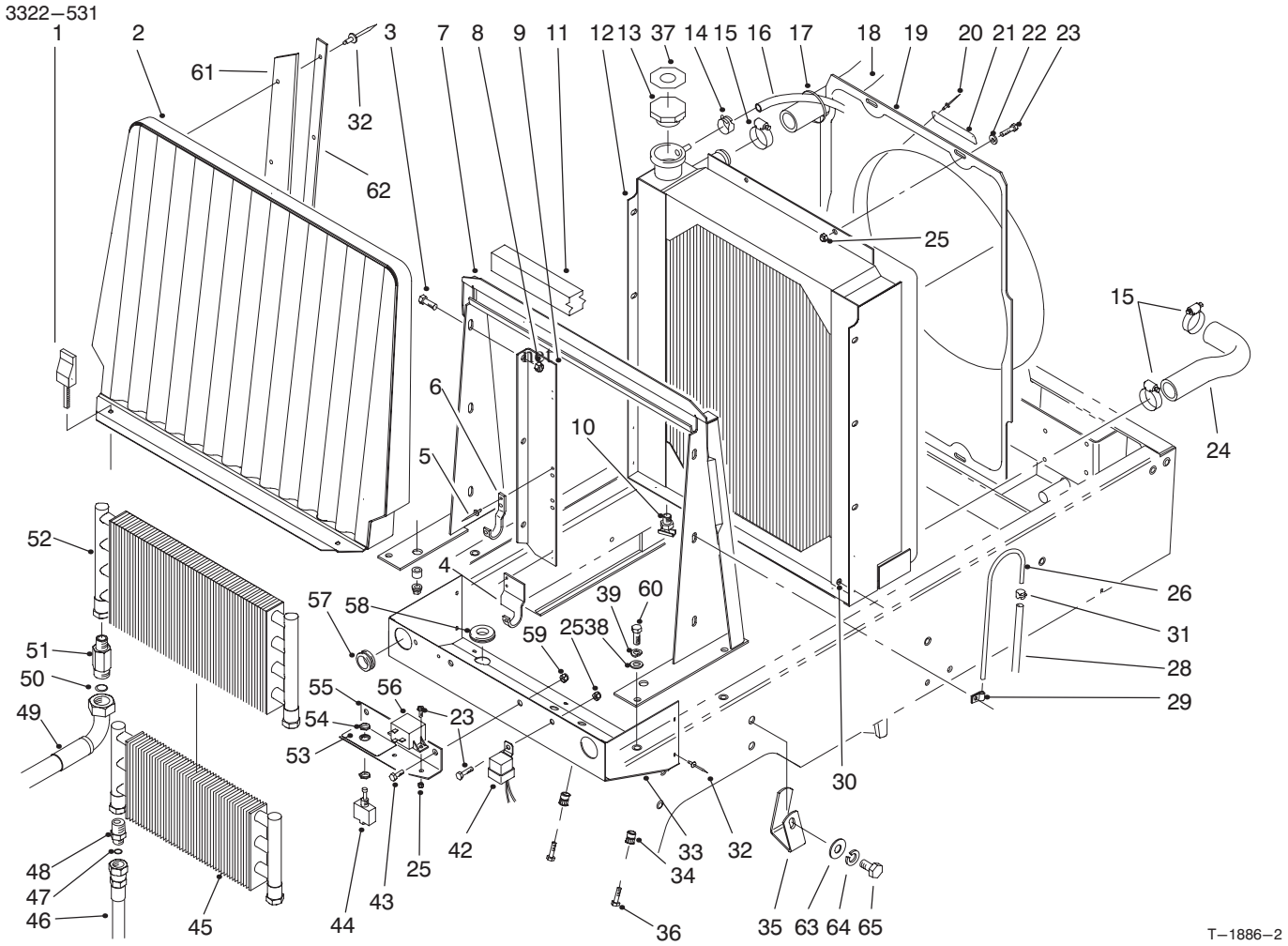

RADIATOR ASSEMBLY (Continued)

Ref. No.	Part No.	Description	No. Used
46	93–0076	Hose–Trans. to Cooler	1
*	93–0075	Hose–Trans. to Cooler	1
47	237–22	O–Ring	2
48	340–124	Fitting–Straight (Incl. Ref. #47)	2
49	93–0077	Hose–Cooler, RH	1
*	93–0078	Hose–Cooler, LH	1
50	237–65	O–Ring	2
51	92–4999	Fitting–Hydraulic 90° (Incl. Ref. #50)	2
52	75–1040	Cooler–Oil	1
53	93–6684	Decal–Backlap	1
53	84–3260	Decal–Backlap (Japan)	1

Ref. No.	Part No.	Description	No. Used
54	218–498	Nut–Lock	2
55	75–3390	Bracket–Backlap	1
56	66–8800	Relay–Glow Plug	1
57	240–3	Grommet	2
58	93–0082	Grommet	2
59	3296–29	Nut–Lock	2
60	322–5	Screw–HH	4
61	93–3623	Strip–Sealing, Radiator	2
62	93–3624	Plate–Retaining	2
63	3256–26	Washer–Flat	2
64	3253–7	Washer–Lock	2
65	325–2	Screw–HH	2

*Not Illustrated

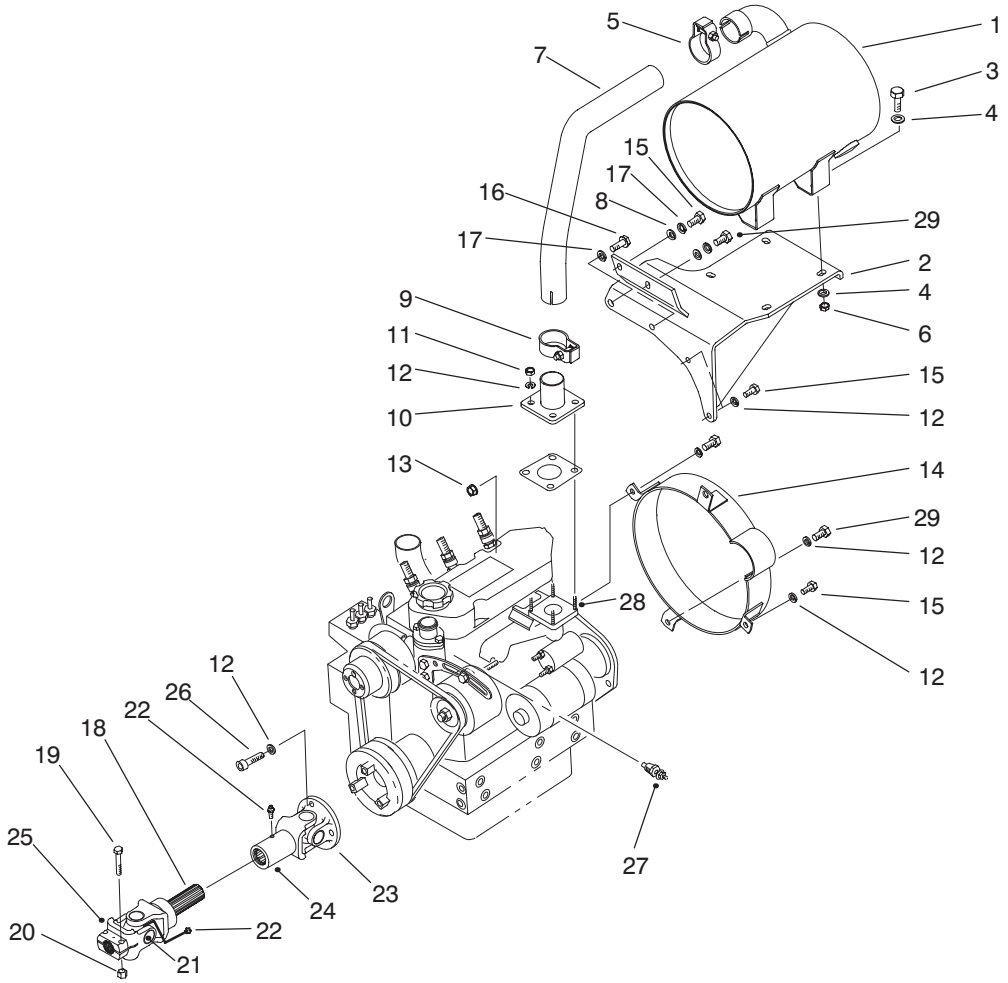

T–2900–2

MUFFLER & PUMP DRIVE ASSEMBLY

Ref. No.	Part No.	Description	No. Used
1	98–9794	Muffler	1
2	98–4555	Bracket–Muffler	1
3	323–6	Screw–HH	4
4	3256–4	Washer–Flat	8
5	98–9310	Clamp–Muffler	1
6	3296–39	Nut–Lock	4
7	98–4524	Tube–Exhaust	1
8	33044–00	Washer–Flat	2
9	98–9309	Clamp–Muffler	1
10	98–4527	Pipe–Engine Exhaust	1
11	33014–00	Nut–Lock	4
12	42–9850	Washer–Lock	9
13	33024–00	Nut–Lock	1
14	98–4564	Guard–Flywheel	1
15	33114–025	Screw–HH	5
16	43–0090	Screw–HH	2
17	42–9600	Washer–Lock	2

Ref. No.	Part No.	Description	No. Used
18	98–9765	Yoke–Shaft	1
19	322–9	Screw–HH	2
20	3296–29	Nut–Lock	2
21	98–9766	Kit–U–Joint	2
22	302–5	Fitting–Grease	2
23	98–9769	Yoke–Flange	1
24	98–9767	Yoke–Slip Tube	1
25	98–9768	Yoke–End	1
26	98–9322	Screw–HSH	3
27	98–9346	Sender–Temp.	1
28	42–9560	Stud	4
29	33114–020	Screw–HH	2
*	98–4593	Asm–Drive Shaft (Incl. Ref. #18, 21–25)	1
*	75–6880	Screen–Spark Arrester (Optional)	1

*Not Illustrated

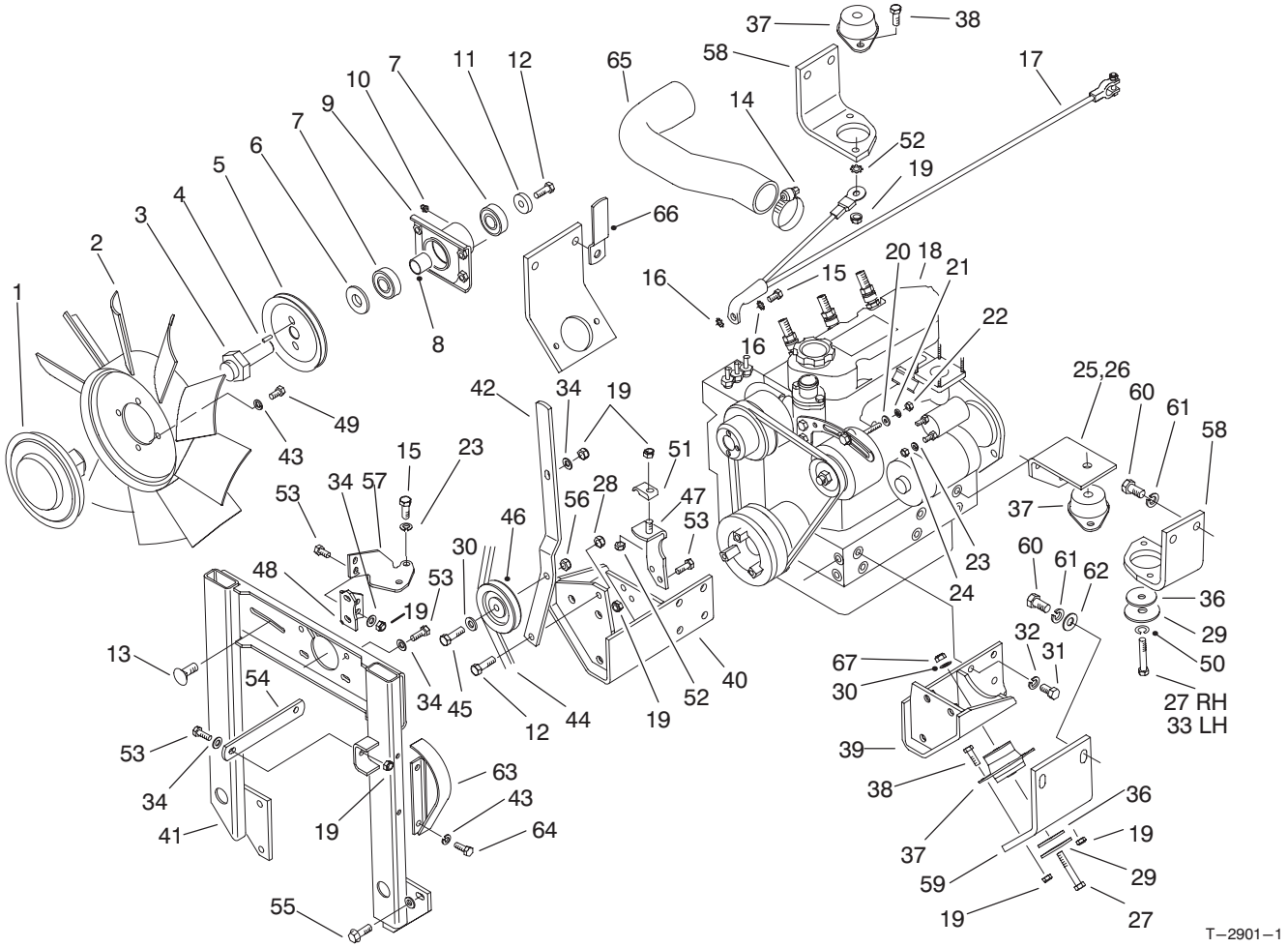

ENGINE INSTALLATION ASSEMBLY

Ref. No.	Part No.	Description	No. Used
1	74–5520	Clutch–Fan	1
2	75–3780	Fan	1
3	75–6380	Shaft–Fan	1
4	32121–2	Pin–Roll	2
5	98–9743	Pulley–Fan	1
6	47–0110	Spacer–Spindle	1
7	251–318	Bearing–Ball	2
8	75–5310	Spacer–Bearing	1
9	75–4450	Hub–Fan Drive	1
10	302–10	Fitting–Grease 45°	1
11	67–1630	Spacer–Fan	1
12	323–6	Screw–HH	2
13	3230–2	Bolt–Carriage	1
14	2412–92	Clamp–Hose	1
15	98–9322	Screw–HH	1
16	3255–8	Washer–Lock	2
17	98–4598	Cable–Battery (Ground)	1
18	98–9300	Asm–Engine	1
19	3296–29	Nut–Lock	15
20	3256–78	Washer–Flat	1
21	43–5930	Washer–Lock	1
22	48–7890	Nut–Hex.	1
23	42–9850	Washer–Lock	2

Ref. No.	Part No.	Description	No. Used
24	57–6390	Nut–Lock	1
25	98–4515	Bracket–Engine LH Rear	1
26	94–4514	Bracket–Engine RH Rear	1
27	323–12	Screw–HH RH	3
28	3296–39	Nut–Lock	1
29	87–5100	Washer–Snubbing	4
30	3256–24	Washer–Flat	5
31	43–0090	Screw–HH	14
32	42–9600	Washer–Lock	14
33	323–10	Screw–HH LH	1
34	3256–23	Washer–Flat	10
35	33114–016	Screw–HH	2
36	98–4596	Washer–Mount, Engine	4
37	83–1030	Mount–Engine	4
38	322–6	Screw–HH	8
39	98–4539	Bracket–Engine LH Front	1
40	98–4543	Bracket–Engine Mount RH	1
41	98–4530	Support–Fan, Engine	1
42	98–4575	Bracket–Fan Idler	1
43	3253–4	Washer–Lock	6
44	98–9744	Belt–V	1
45	323–8	Screw–HH	1
46	63–8140	Pulley–Idler	1

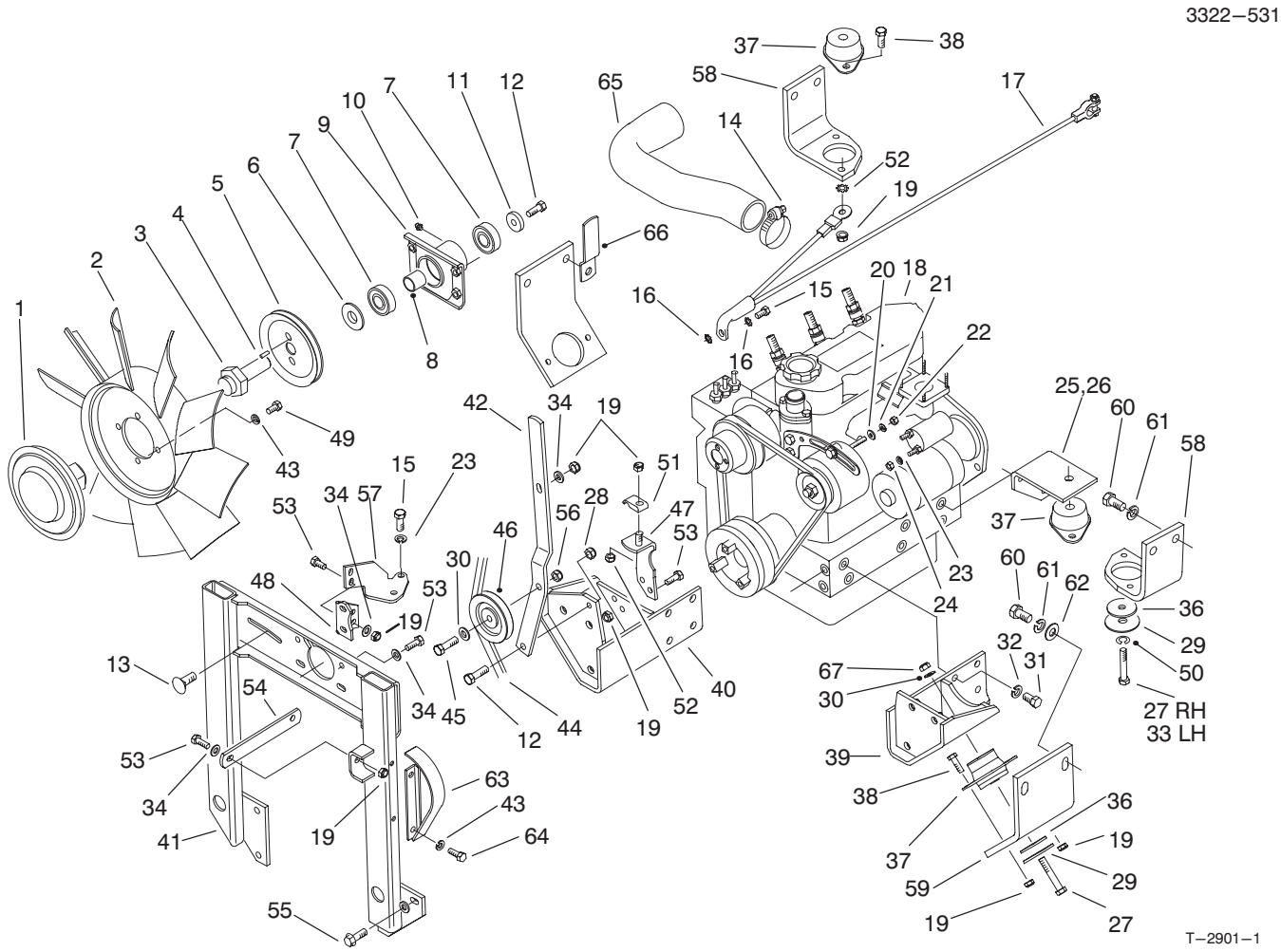

ENGINE INSTALLATION ASSEMBLY (Continued)

Ref. No.	Part No.	Description	No. Used
47	98–9749	Bracket–Mount, Throttle	1
48	98–9740	Bracket–Support, Fan	1
49	322–2	Screw–HH	4
50	3253–21	Washer–Lock	1
51	3–6657	Clamp–Cable	1
52	3255–8	Washer–Lock Ext. Tooth	1
53	322–4	Screw–HH	9
54	98–4547	Plate–Mount, Fan	1
55	3234–29	Screw–HHF	6
56	3296–59	Nut–Lock	1
57	98–9741	Bracket–Mount, Fan	1

Ref. No.	Part No.	Description	No. Used
58	98–4513	Bracket–Eng. Left Rear	2
59	93–0095	Bracket–Eng. Front	2
60	3213–2	Screw–HH	8
61	3253–7	Washer–Lock	8
62	3256–40	Washer–Flat	4
63	98–4561	Shield–Alternator	1
64	32144–14	Screw–HH	2
65	98–4509	Hose–Air Cleaner	1
66	98–4594	Clamp–Retainer	1
67	32128–36	Nut–HFH	3

3322−531

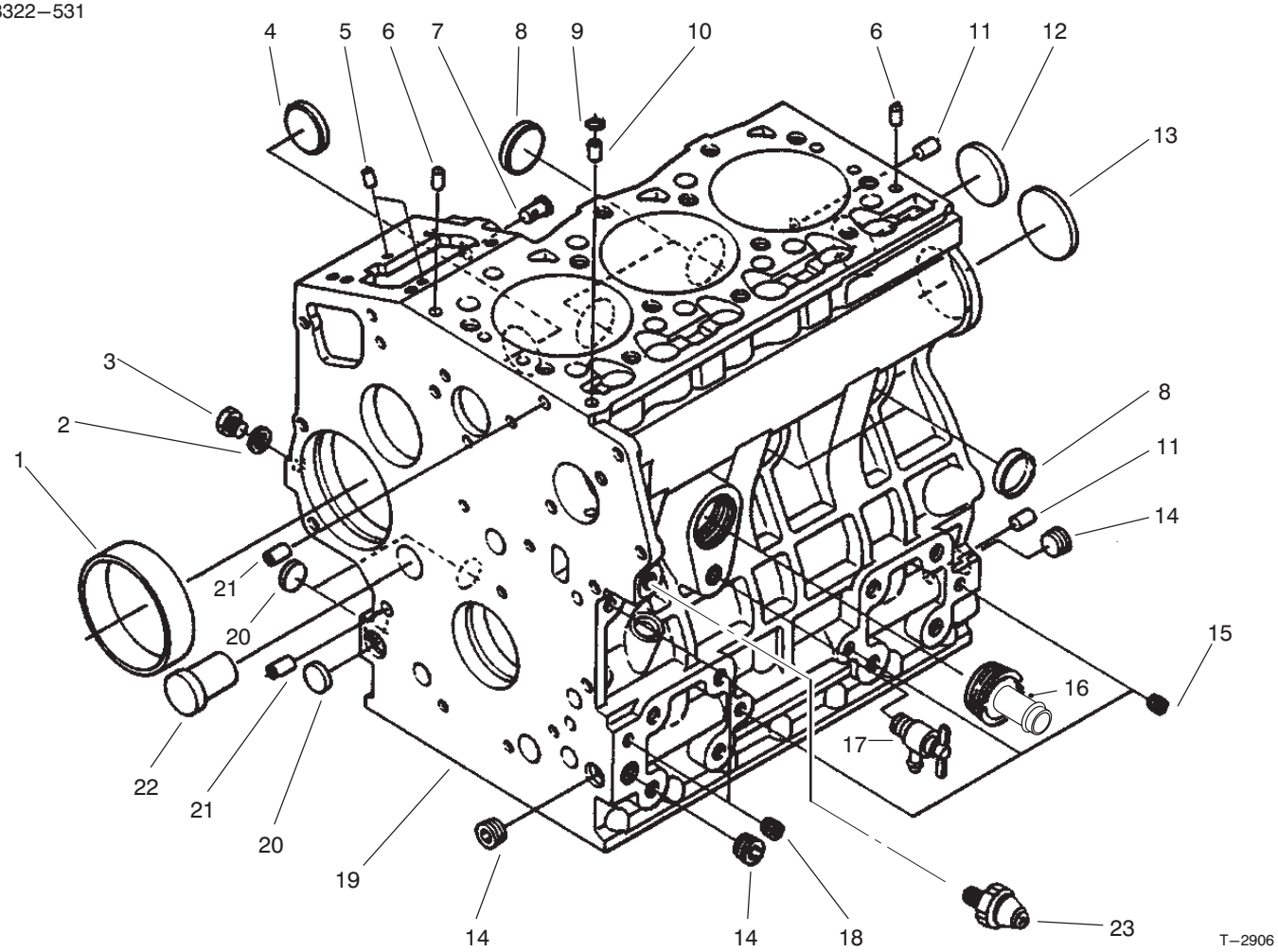

CRANKCASE ASSEMBLY

Ref. No.	Part No.	Description	No. Used
1	98−9656	Bushing−Governor, Gear	1
2	98−7428	Gasket	1
3	98−7507	Plug	1
4	98−9599	Plug	1
5	98−9375	Pin−Straight	2
6	98−9376	Pin−Straight	2
7	98−9630	Pin−Start Spring	1
8	98−9398	Cap−Sealing	4
9	98−9539	Pin−Pipe	1
10	98−7509	O−Ring	1
11	98−9377	Pin−Straight	2
12	98−7539	Cap−Sealing	1
13	98−9668	Plug	1

Ref. No.	Part No.	Description	No. Used
14	98−9597	Plug	3
15	98−7540	Plug	3
16	99−8347	Joint−Drain, Pipe	1
17	98−9436	Asm−Cock, Drain	1
18	98−7487	Plug	2
19	99−8300	Asm−Crankcase (Incl. Ref. #1−8, 10−16. 18 & 20−22)	1
20	98−9379	Plug	3
21	98−9387	Pin−Pipe	2
22	98−9675	Plug	1
23	98−9416	Switch	1

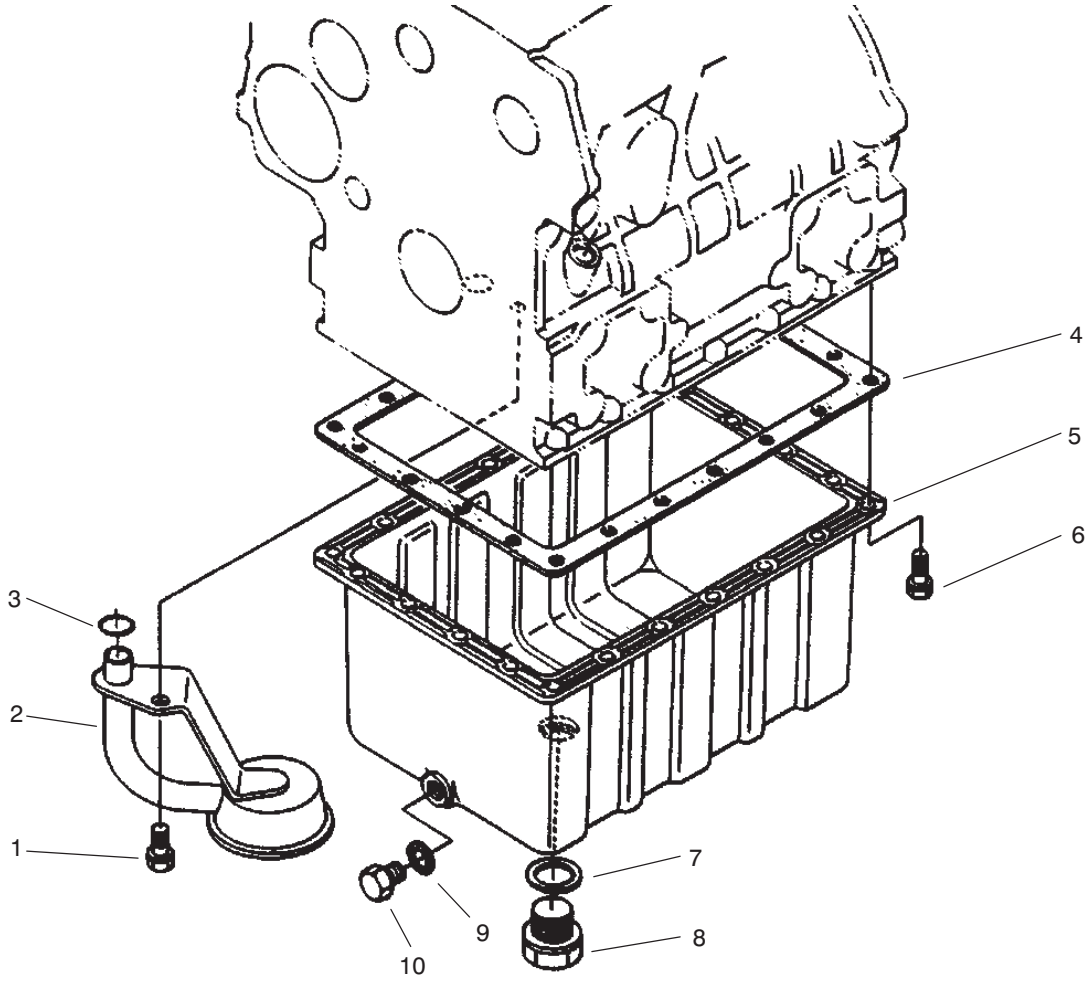

T−2907

OIL PAN ASSEMBLY

Ref. No.	Part No.	Description	No. Used
1	98−9358	Bolt	1
2	98−9538	Filter−Oil	1
3	98−7527	O−Ring	1
4	98−9646	Gasket−Oil Pan	1
5	98−9685	Oil Pan	1

Ref. No.	Part No.	Description	No. Used
6	98−9350	Bolt	22
7	98−9399	Gasket	1
8	98−7523	Plug−Drain	1
9	98−7524	Gasket	1
10	98−9386	Plug	1

3322−531

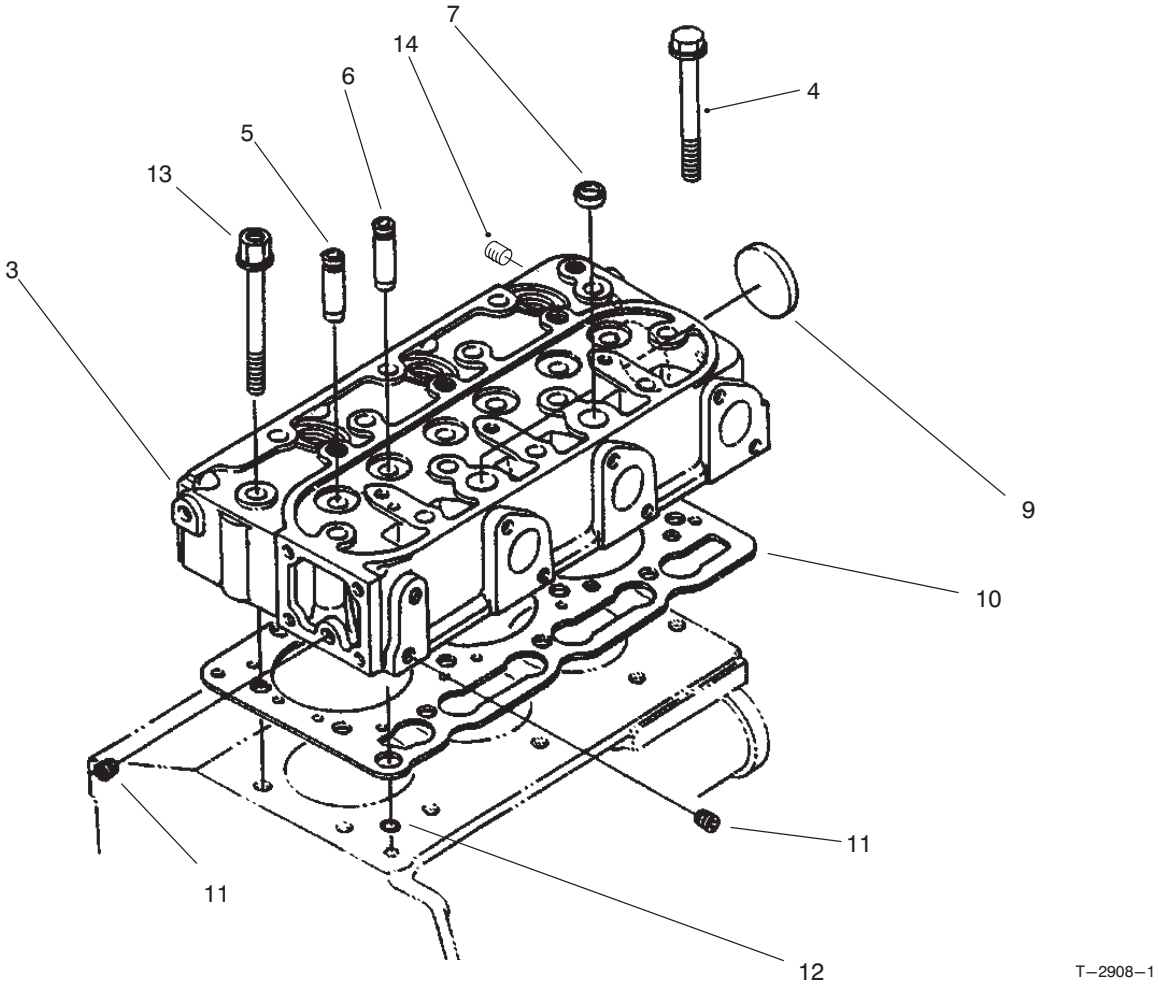

CYLINDER HEAD ASSEMBLY

Ref. No.	Part No.	Description	No. Used
3	99−8344	Asm−Cylinder Head (Incl. Ref. #5−7, 9,11 & 14)	1
4	98−9479	Bolt−Cylinder Head	12
5	98−9499	Guide−Inlet Valve	3
6	98−9500	Guide−Exhaust Valve	3
7	98−9389	Cap−Sealing	2

Ref. No.	Part No.	Description	No. Used
9	98−9395	Cap−Sealing	1
10	98−9613	Gasket−Cylinder Head	1
11	98−7540	Plug	2
12	98−7509	O−Ring	1
13	98−9647	Bolt−Cylinder Head	2
14	98−9444	Plug	1

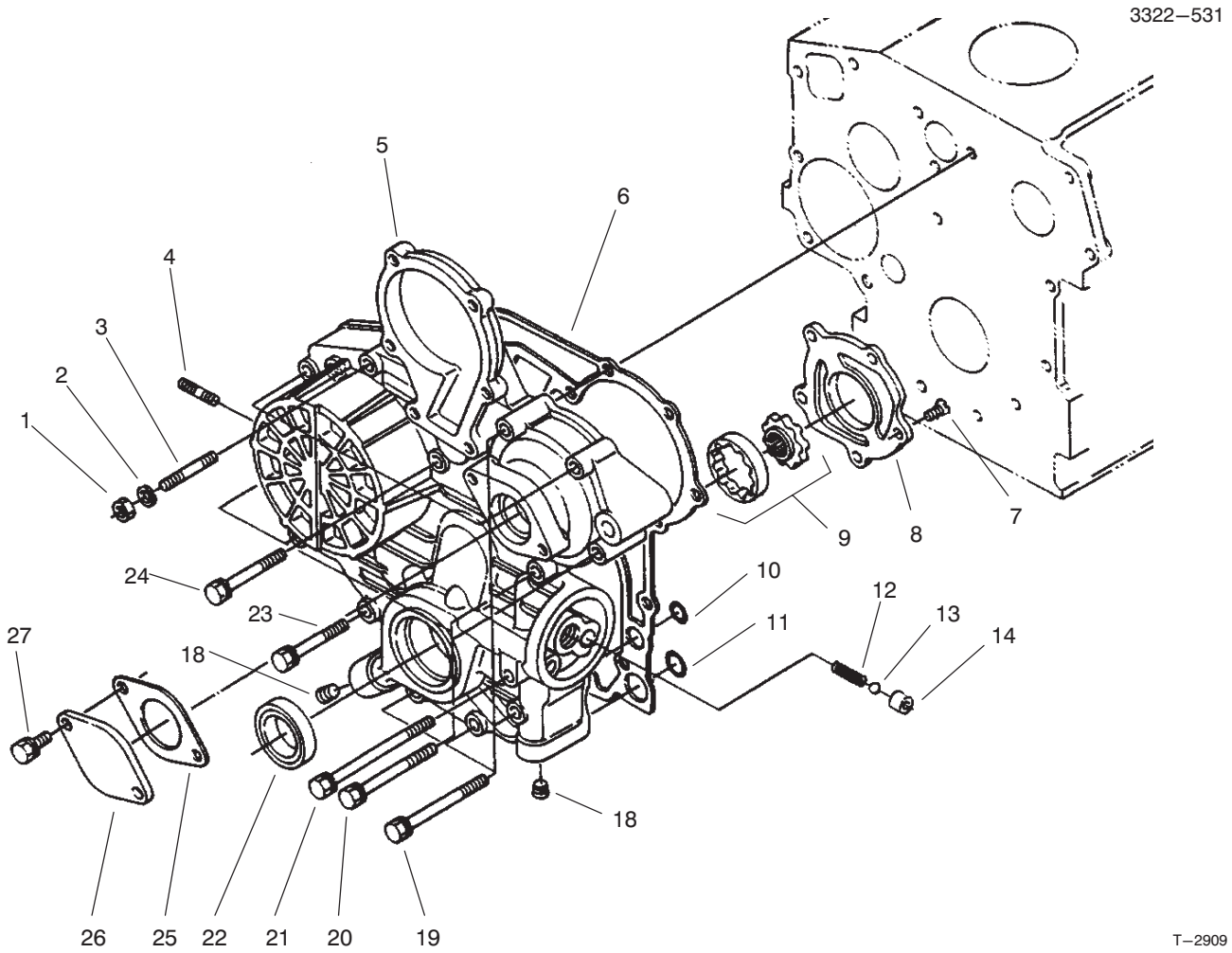

GEAR CASE ASSEMBLY

Ref. No.	Part No.	Description	No. Used
1	98–7572	Nut	1
2	98–9367	Washer–Lock	1
3	98–9363	Stud	1
4	98–9362	Stud	2
5	99–8381	Asm–Case, Gear (Incl. Ref. #7–9, 12–14 & 18)	1
6	98–9633	Gasket–Gear Case	1
7	98–9592	Screw	5
8	98–9541	Cover–Oil Pump	1
9	98–9540	Asm–Rotor, Oil Pump	1
10	98–9372	O–Ring	2
11	98–7547	O–Ring	2

Ref. No.	Part No.	Description	No. Used
12	98–9544	Spring	1
13	98–9380	Ball	1
14	98–9543	Seal–Valve	1
18	98–9598	Plug	2
19	98–9356	Bolt	2
20	98–9355	Bolt	6
21	98–9586	Bolt	1
22	98–9482	Seal–Oil	1
23	98–9437	Bolt	1
24	98–7496	Bolt	3
25	98–9684	Gasket–Gear Case	1
26	98–9641	Cover	1
27	98–7692	Bolt	2

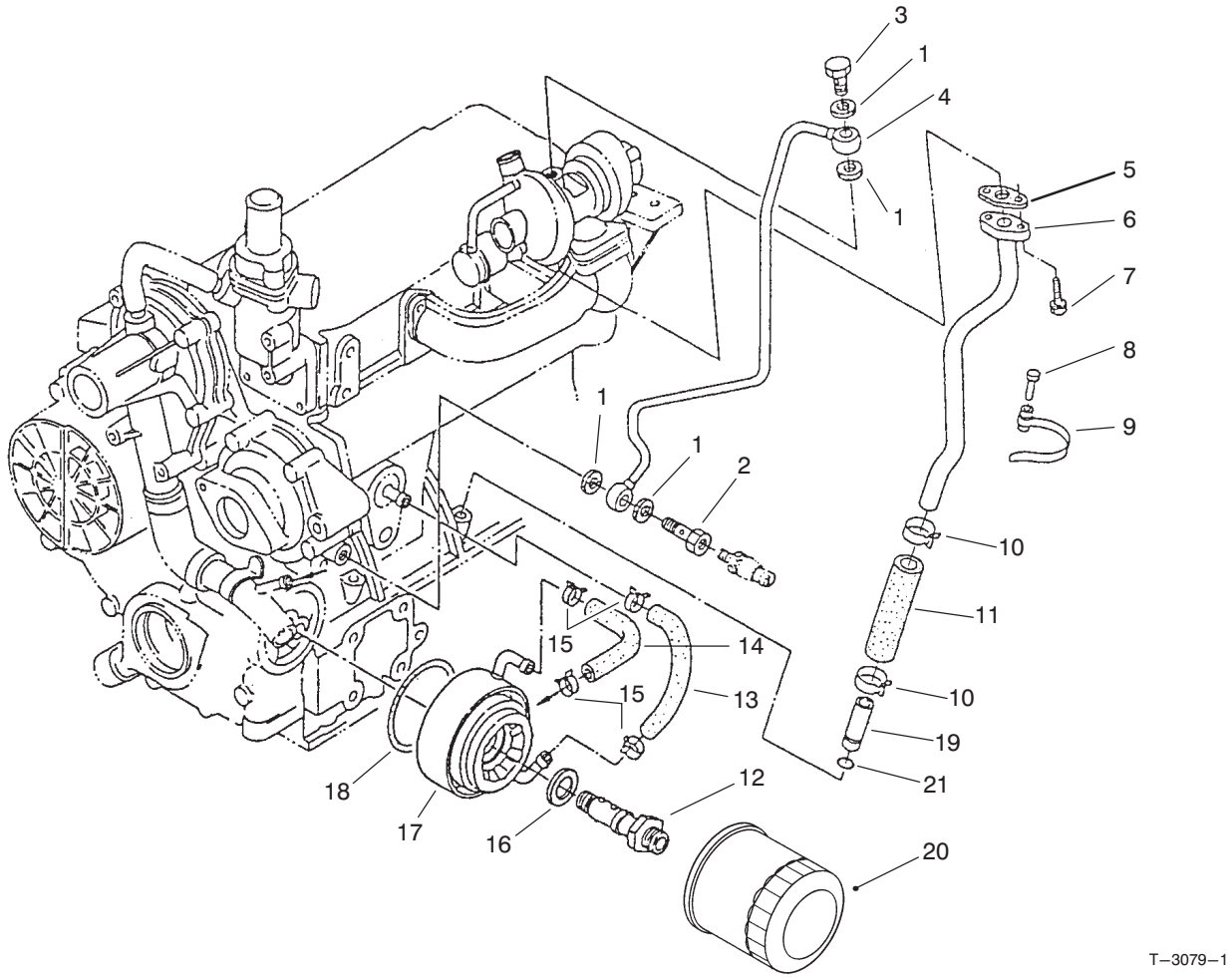

FILTER, OIL COOLER & PIPE ASSEMBLY

Ref. No.	Part No.	Description	No. Used
1	99–8346	Gasket	4
2	98–9417	Bolt–Eye Joint	1
3	98–9418	Bolt–Eye Joint	1
4	98–9419	Pipe–Oil	1
5	98–9435	Gasket	1
6	98–9461	Pipe–Oil	1
7	98–9587	Bolt	2
8	98–9591	Pin–Band	1
9	98–9601	Clamp–Pipe	1
10	98–9714	Clamp–Hose	2
11	98–9721	Pipe–Oil	1

Ref. No.	Part No.	Description	No. Used
12	98–9723	Asm–Holder	1
13	98–9724	Pipe–Cooler, Oil	1
14	98–9578	Pipe–Return, Water	1
15	98–9579	Band–Pipe	4
16	98–9727	Collar	1
17	98–9728	Asm–Cooler, Oil	1
18	98–9729	O–Ring	1
19	99–8383	Asm–Pipe, Oil (Incl. Ref. #21)	1
20	99–8384	Asm–Cartridge, Oil	1
21	98–9722	O–Ring	1

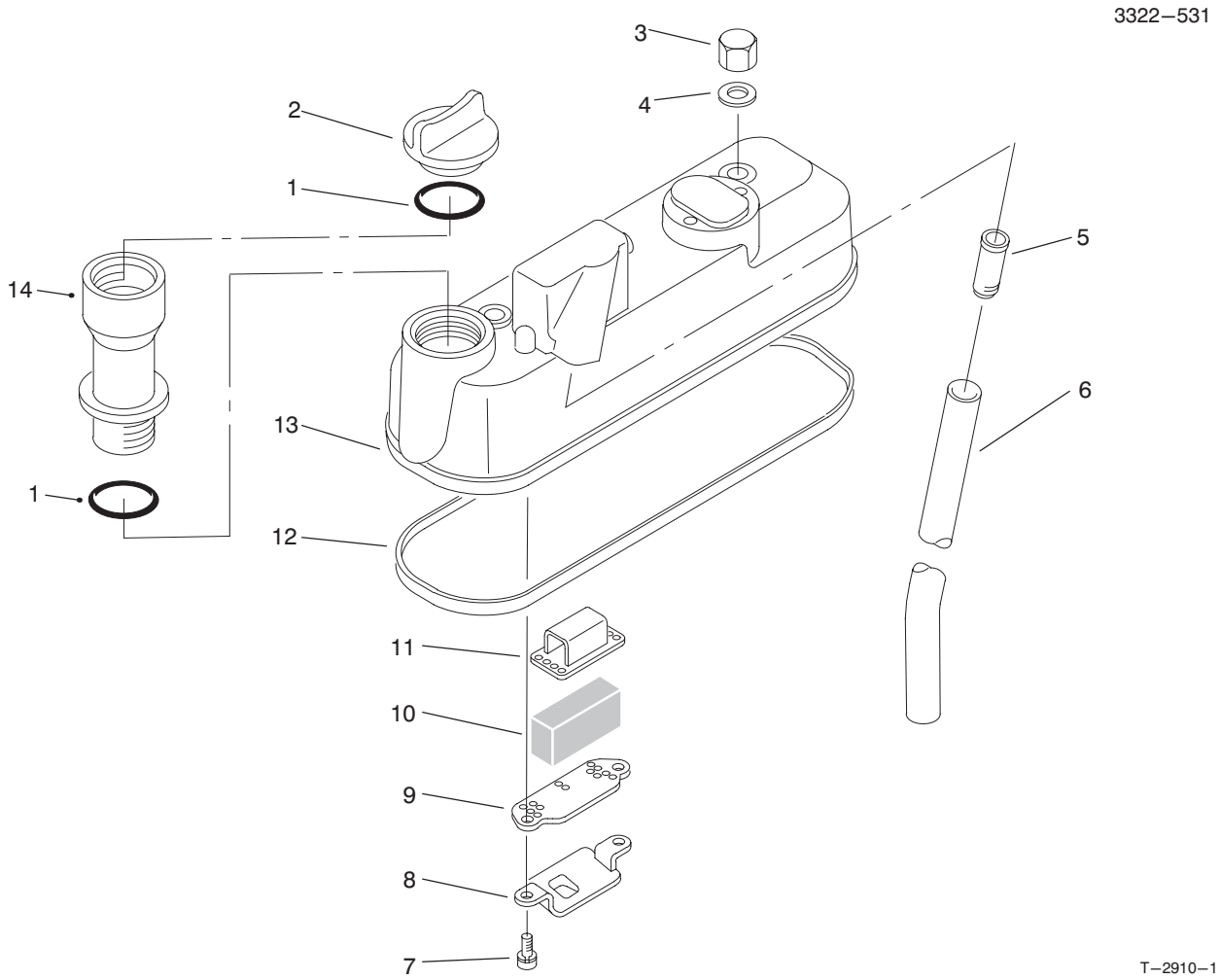

HEAD COVER ASSEMBLY

Ref. No.	Part No.	Description	No. Used
1	98–7430	O–Ring	2
2	98–9449	Plug–Oil Filler	1
3	98–9455	Nut–Cap	3
4	98–9454	Gasket	3
5	98–9492	Joint–Breather Pipe	1
6	98–9491	Pipe–Breather	1
7	98–9364	Screw w/washer	2
8	98–9490	Oil Shield–Breather	1

Ref. No.	Part No.	Description	No. Used
9	98–9488	Plate–Breather Element	1
10	98–9493	Element–Breather	1
11	98–9489	Plate–Breather Element	1
12	98–9615	Gasket–Head Cover	1
13	98–9614	Asm–Cover, Cylinder Head (Incl. Ref. #5 & 7–12)	1
14	99–8349	Extension–Fill, Oil	1

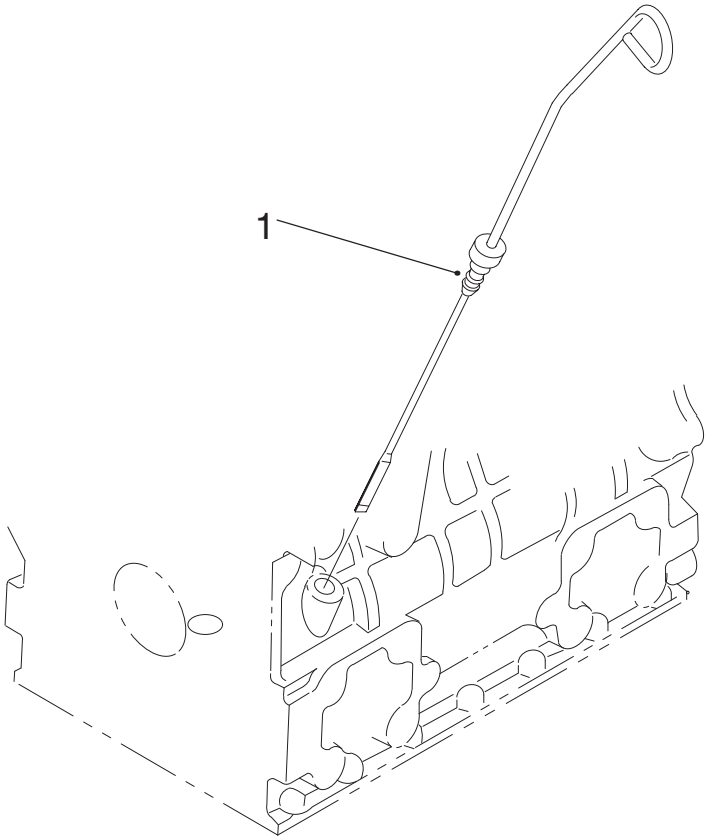

DIPSTICK ASSEMBLY

Ref. No.	Part No.	Description	No. Used
1	98–9627	Gauge–Oil	1

Ref. No.	Part No.	Description	No. Used

*Not Illustrated

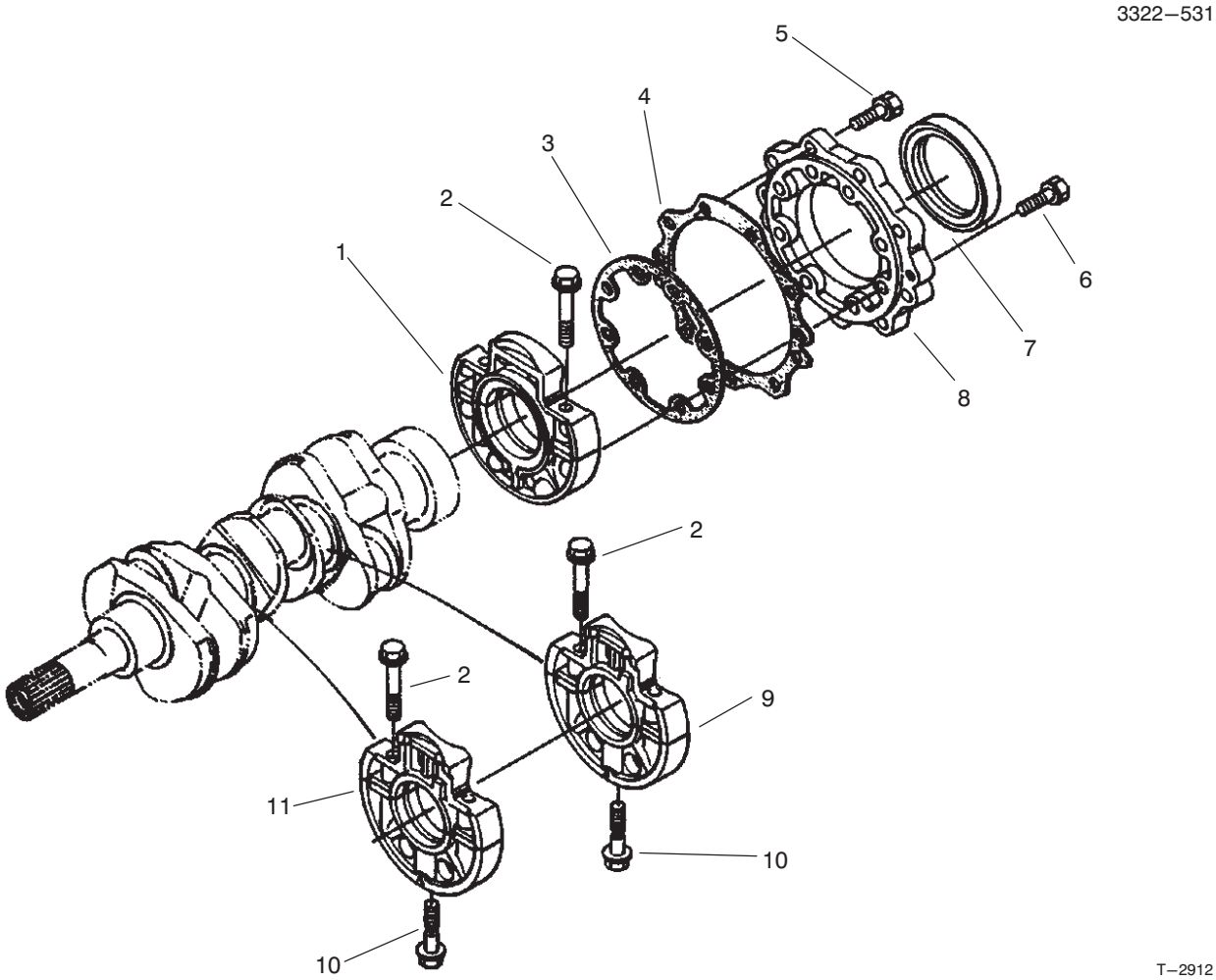

MAIN BEARING CASE ASSEMBLY

Ref. No.	Part No.	Description	No. Used
1	98–9480	Asm–Case, Main Bearing	1
2	98–9484	Bolt–Bearing Case	6
3	98–9634	Gasket–Bearing Case	1
4	98–9635	Gasket–Bearing Case Cover	1
5	98–7568	Bolt	9
6	98–9352	Bolt	8

Ref. No.	Part No.	Description	No. Used
7	98–9483	Seal–Oil	1
8	98–9487	Cover–Bearing Case	1
9	99–8360	Asm–Case, Main Bearing	1
10	98–9485	Bolt–Bearing Case	2
11	99–8361	Asm–Case, Main Bearing	1

3322−531

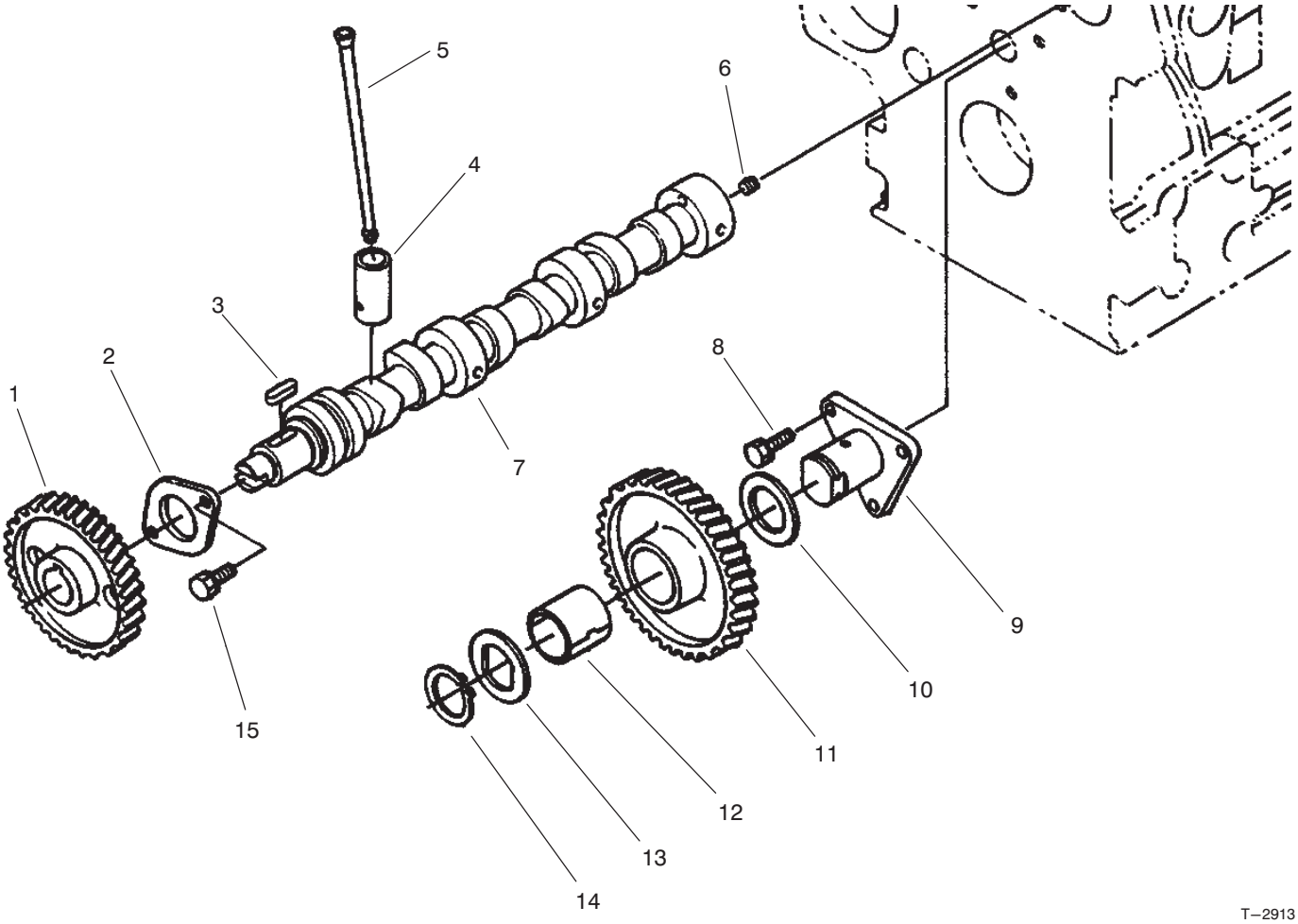

T−2913

CAMSHAFT ASSEMBLY

Ref. No.	Part No.	Description	No. Used
1	98−9512	Gear−Cam	1
2	98−9510	Stopper−Camshaft	1
3	98−9378	Key−Feather	1
4	98−9616	Tappet	6
5	98−9509	Push Rod	6
6	98−7449	Screw−Set	1
7	99−8362	Asm−Camshaft (Incl. Ref. #1−3, 6 & 15)	1
8	98−7692	Bolt	3

Ref. No.	Part No.	Description	No. Used
9	98−9533	Shaft−Gear, Idle	1
10	98−9535	Collar−Gear, Idle	1
11	98−9649	Asm−Gear, Idle (Incl. Ref. #12)	1
12	98−9650	Bushing−Gear, Idle	1
13	98−9536	Collar−Gear, Idle	1
14	98−9534	Clip−Circular, Idle Gear	1
15	98−9351	Bolt	2

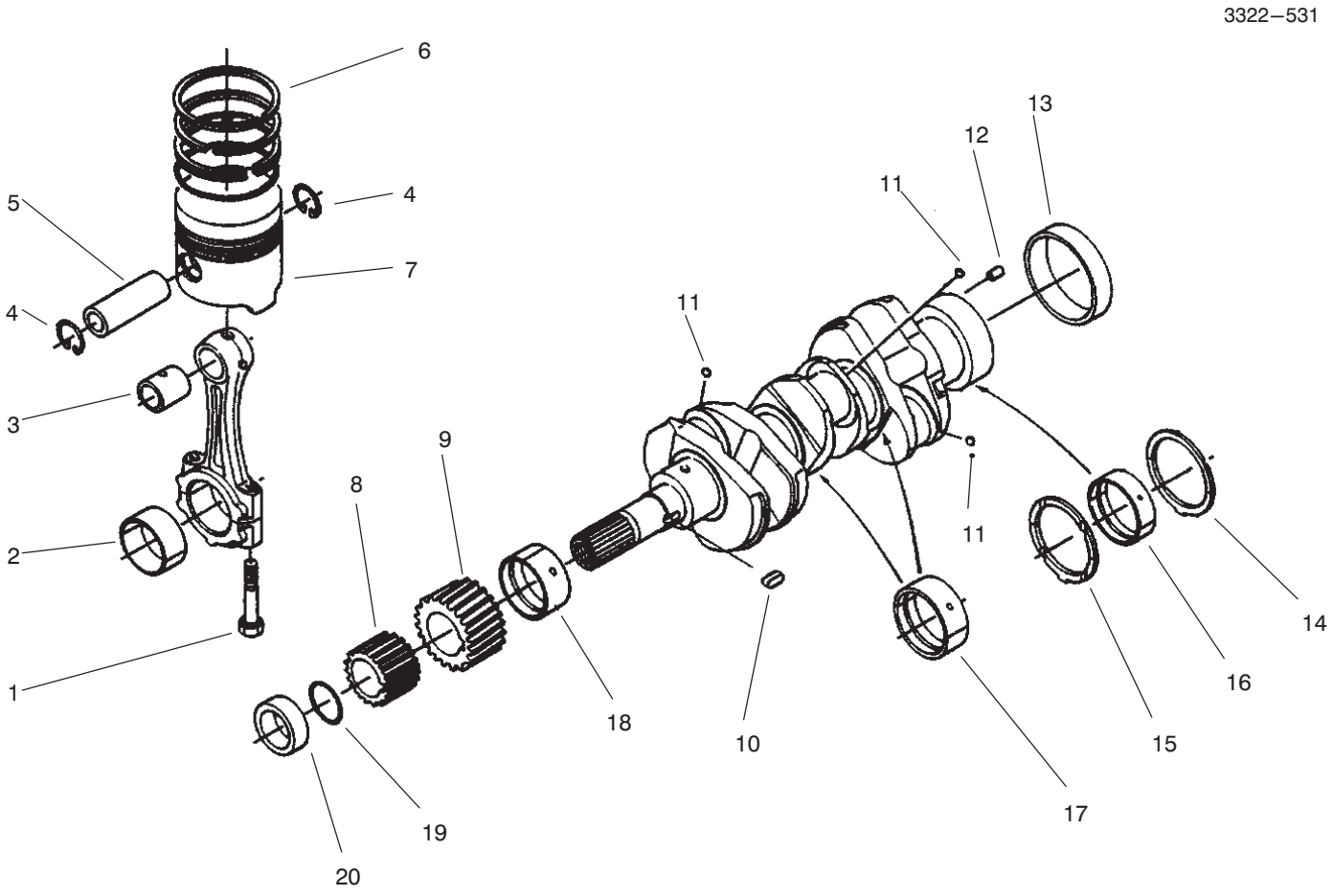

PISTON & CRANKSHAFT ASSEMBLY

Ref. No.	Part No.	Description	No. Used
1	98–9517	Bolt–Connecting Rod	6
2	98–9553	Metal–Crankpin (Std.)	3
2	98–9519	Metal–Crankpin (0.2mm Undersize)	3
2	98–9520	Metal–Crankpin (0.4mm Undersize)	3
3	98–9515	Bushing–Piston Pin	3
4	98–9514	Clip–Circular, Piston Pin	6
5	98–9513	Pin–Piston	3
6	98–9551	Asm–Piston Ring (Std.)	3
6	98–9619	Asm–Piston Ring (0.5mm Oversize)	3
7	98–9550	Piston (Std.)	3
7	98–9470	Piston (0.5mm Oversize)	3
8	98–9542	Gear–Oil Pump Drive	1
9	98–9532	Gear–Crankshaft	1
10	98–9666	Key	1
11	98–7473	Ball	3
12	98–9375	Pin–Straight	1
13	98–9522	Sleeve–Crankshaft	1
14	98–9413	Metal–Side (Std.)	2
14	98–9414	Metal–Side (0.2mm Oversize)	2
14	98–9415	Metal–Side (0.4mm Oversize)	2
15	98–9688	Metal–Side (Std.)	2
15	98–9689	Metal–Side (0.2mm Oversize)	2
15	98–9690	Metal–Side (0.4mm Oversize)	2
16	98–9556	Metal–Crankshaft (Std)	1
16	98–9526	Metal–Crankshaft (0.2mm Undersize)	1
16	98–9527	Metal–Crankshaft (0.4mm Undersize)	1
17	98–9555	Metal–Crankshaft (Std Set)	2
17	98–9530	Metal–Crankshaft (0.2mm Undersize Set)	2
17	98–9531	Metal–Crankshaft (0.4mm Undersize Set)	2
18	98–9554	Metal–Crankshaft (Std)	1
18	98–9528	Metal–Crankshaft (0.2mm Undersize)	1
18	98–9529	Metal–Crankshaft (0.4mm Undersize)	1
19	98–9373	O–Ring	1
20	98–9521	Collar–Crankshaft	1
*	98–9552	Asm–Rod, Connecting (Incl. Ref. #1–3)	3
*	98–9642	Asm–Crankshaft (Incl. Ref. #8–13)	1

*Not Illustrated

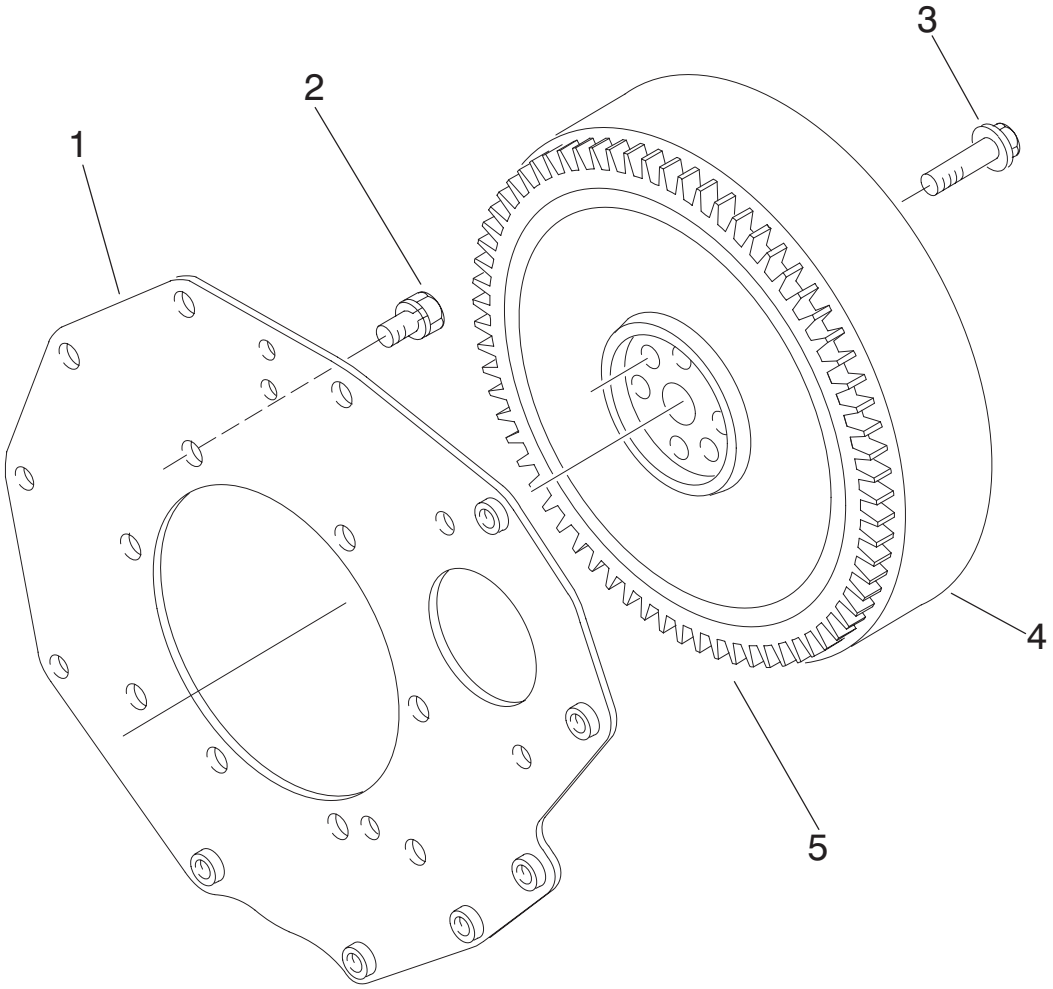

T−2915

FLYWHEEL ASSEMBLY

Ref. No.	Part No.	Description	No. Used
1	98−9486	Plate−End, Rear	1
2	98−9392	Bolt	8
3	98−9537	Bolt−Flywheel	6

Ref. No.	Part No.	Description	No. Used
4	98−9691	Asm−Flywheel (Incl. Ref. #5)	1
5	98−9394	Gear−Ring	1

*Not Illustrated

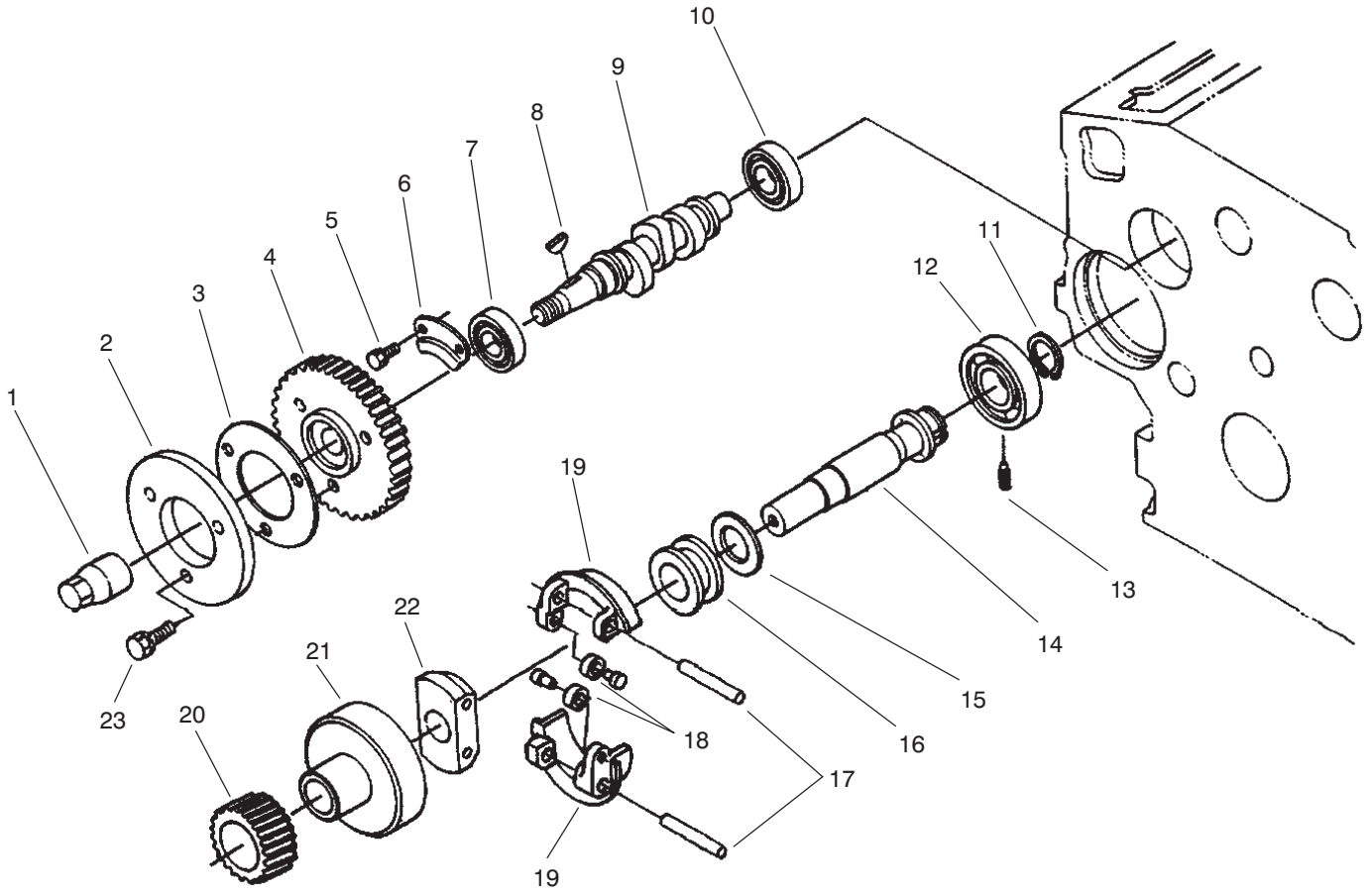

T–2916

FUEL CAMSHAFT ASSEMBLY

Ref. No.	Part No.	Description	No. Used
1	98–9590	Nut–Cap	1
2	98–9547	Cam–Fuel	1
3	98–9548	Washer	1
4	98–9669	Gear–Injection Pump	1
5	98–9350	Bolt	2
6	98–9511	Stopper–Fuel, Camshaft	1
7	98–9383	Bearing–Ball	1
8	98–9595	Key–Woodruff	1
9	98–9459	Camshaft–Fuel	1
10	98–9382	Bearing–Ball	1
11	98–9657	Clip–Circular, Gov. Shaft	1
12	98–9381	Bearing–Ball	1

Ref. No.	Part No.	Description	No. Used
13	98–9565	Screw–Set	1
14	98–9644	Asm–Shaft, Governor (Incl. Ref. #12 & 14–22)	1
15	98–9564	Washer–Thrust	1
16	98–9563	Sleeve–Governor	1
17	98–9560	Shaft–Governor Weight	2
18	98–9692	Roller	2
19	98–9559	Asm–Weight, Governor	2
20	98–9673	Gear–Governor	1
21	98–9562	Holder–Gear, Governor	1
22	98–9561	Holder–Gear, Governor	1
23	98–7605	Bolt	3

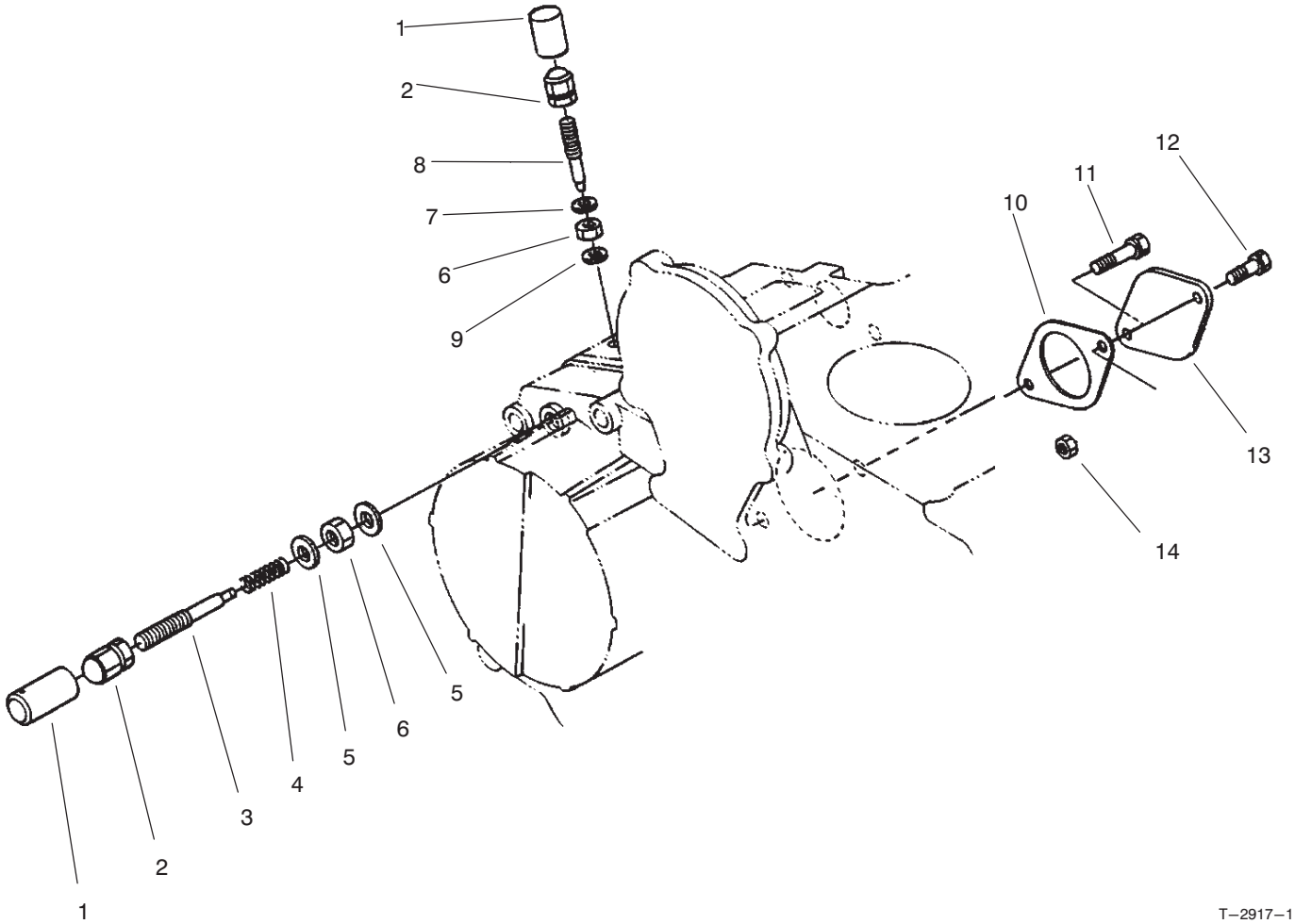

ENGINE STOP LEVER ASSEMBLY

Ref. No.	Part No.	Description	No. Used
1	99−8390	Lock−Pipe, Fuel Adjust.	2
2	99−8387	Nut−Cap	2
3	98−9679	Asm−Bolt, Adjusting (Incl. Ref. #4)	1
4		Spring	1
5	98−7654	Gasket	2
6	99−8386	Nut	2
7	99−8388	Gasket, 10mm Dia.	1
8	98−9557	Bolt−Adjusting	1

Ref. No.	Part No.	Description	No. Used
9	99−8389	Gasket, 14mm Dia.	1
10	98−9674	Packing	1
11	98−7645	Bolt	1
12	98−9359	Bolt	1
13	98−9640	Cover−Pump	1
14	98−7534	Nut	1
*	98−9678	Asm−Apparatus, Idle (Incl. Ref. #1−6)	1

*Not Illustrated

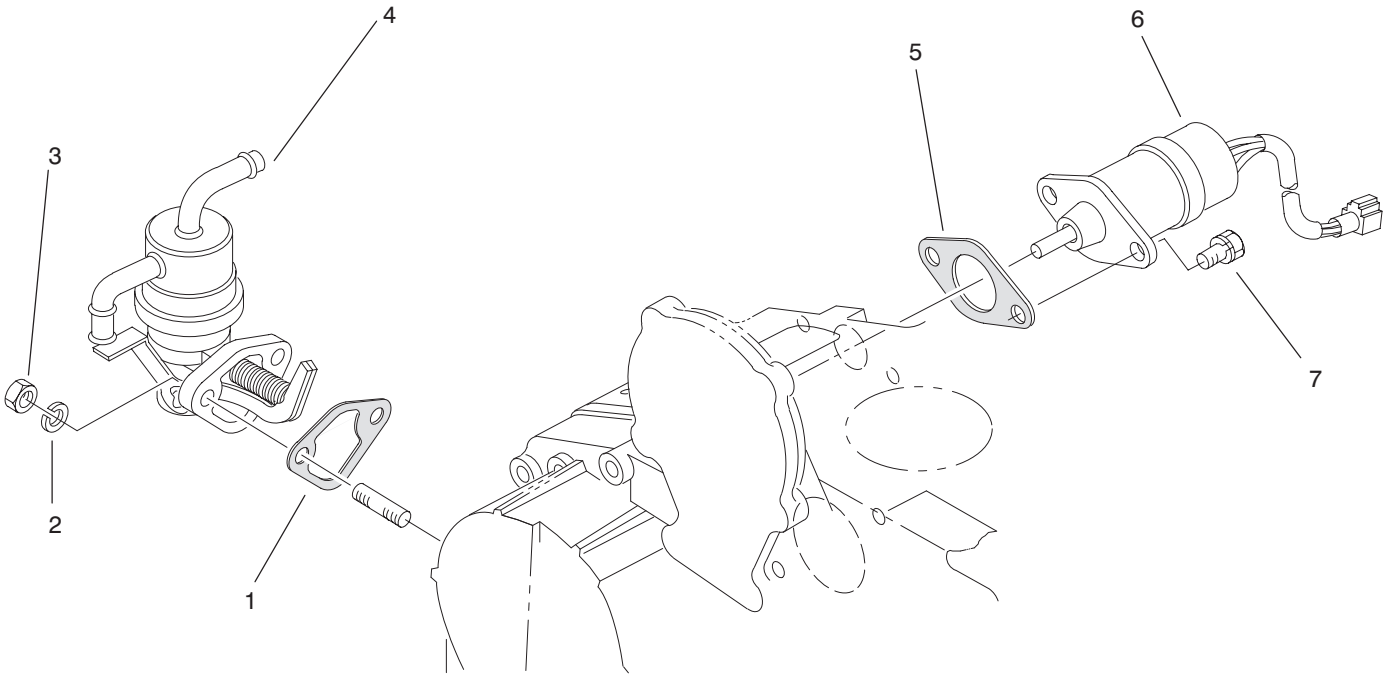

T–2918

STOP SOLENOID & FUEL PUMP ASSEMBLY

Ref. No.	Part No.	Description	No. Used
1	98–9436	Gasket–Fuel Pump	1
2	98–9367	Washer–Lock	2
3	98–7572	Nut	2
4	98–9677	Asm–Pump, Fuel	1

Ref. No.	Part No.	Description	No. Used
5	98–9683	Gasket–Solenoid Cover	1
6	98–9693	Solenoid–Stop	1
7	98–9351	Bolt	2

*Not Illustrated

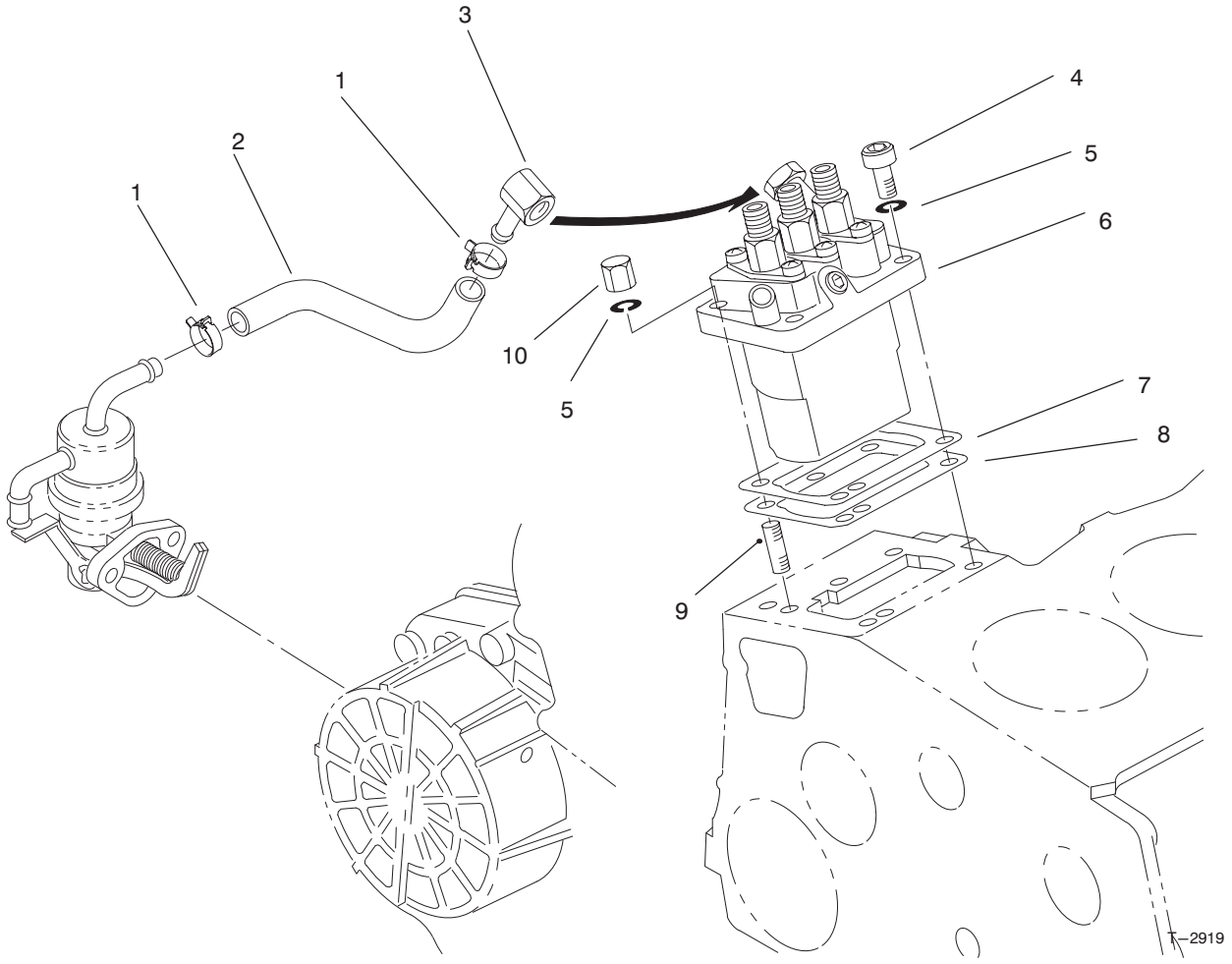

INJECTION PUMP ASSEMBLY

Ref. No.	Part No.	Description	No. Used
1	98−9545	Band−Pipe	2
2	98−9384	Tube−Fuel	1
3	98−9596	Joint−Eye	1
4	98−9361	Bolt	2
5	98−9367	Washer−Lock	4
6	98−9643	Asm−Pump, Injection	1
7	98−9456	Shim−Injection (0.2mm)	1

Ref. No.	Part No.	Description	No. Used
7	98−9457	Shim−Injection (0.25mm)	1
8	98−9458	Shim−Injection (0.30mm)	1
9	98−9438	Stud	2
10	98−9440	Nut−Cap	2
*	98−9467	Asm−Pipe, Fuel (Incl. Ref. #1 & 2)	1

*Not Illustrated

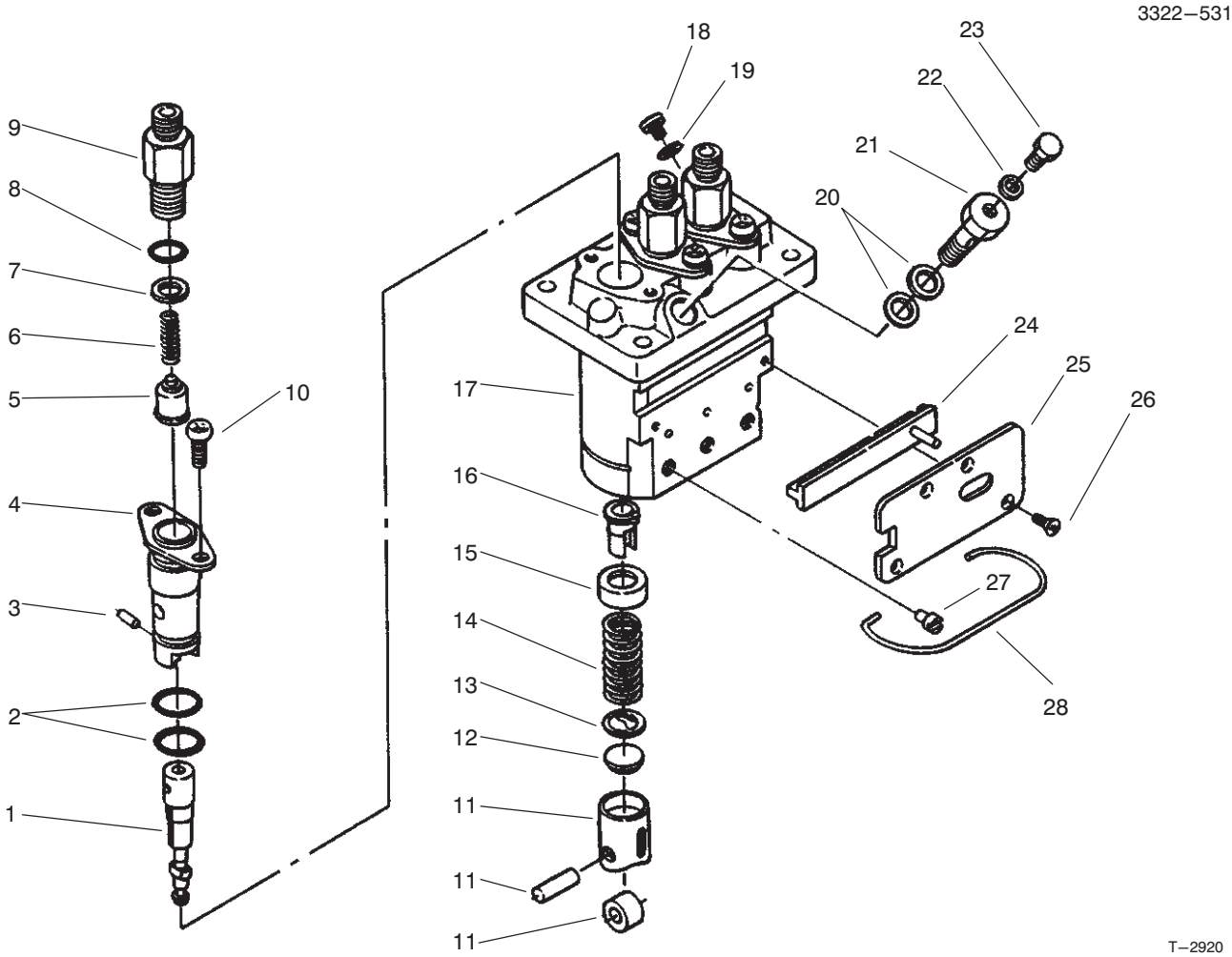

INJECTION PUMP ASSEMBLY (Continued)

Ref. No.	Part No.	Description	No. Used
1	98–9462	Element–Pump	3
2	98–9423	O–Ring	6
3	98–9443	Pin–Joint	3
4	98–9434	Flange–Sleeve	3
5	98–9421	Valve–Delivery	3
6	98–9424	Spring–Valve, Delivery	3
7	98–9425	Gasket–Valve, Delivery	3
8	98–9447	O–Ring	3
9	98–9652	Holder–Valve, Delivery	3
10	98–9452	Screw	6
11	98–9422	Asm–Tappet	3
12	98–9433	Shim	3
13	98–9429	Seat–Spring, Lower	3
14	98–9428	Spring–Plunger	3
15	98–9427	Seat–Spring, Upper	3

Ref. No.	Part No.	Description	No. Used
16	98–9432	Sleeve–Control	3
17	98–9643	Asm–Pump, Injection (Incl. Ref. #1–16 & 18–28)	1
18	98–9466	Plug	1
19	98–9451	Gasket	1
20	98–9445	Gasket	2
21	98–9464	Bolt–Joint	1
22	98–9446	Gasket	1
23	98–9430	Screw	1
24	98–9463	Rack–Control	1
25	98–9465	Plate	1
26	98–9442	Screw–Countersunk Hd.	4
27	98–9426	Pin–Guide, Tappet	3
28	98–9450	Pin–Clamp	1

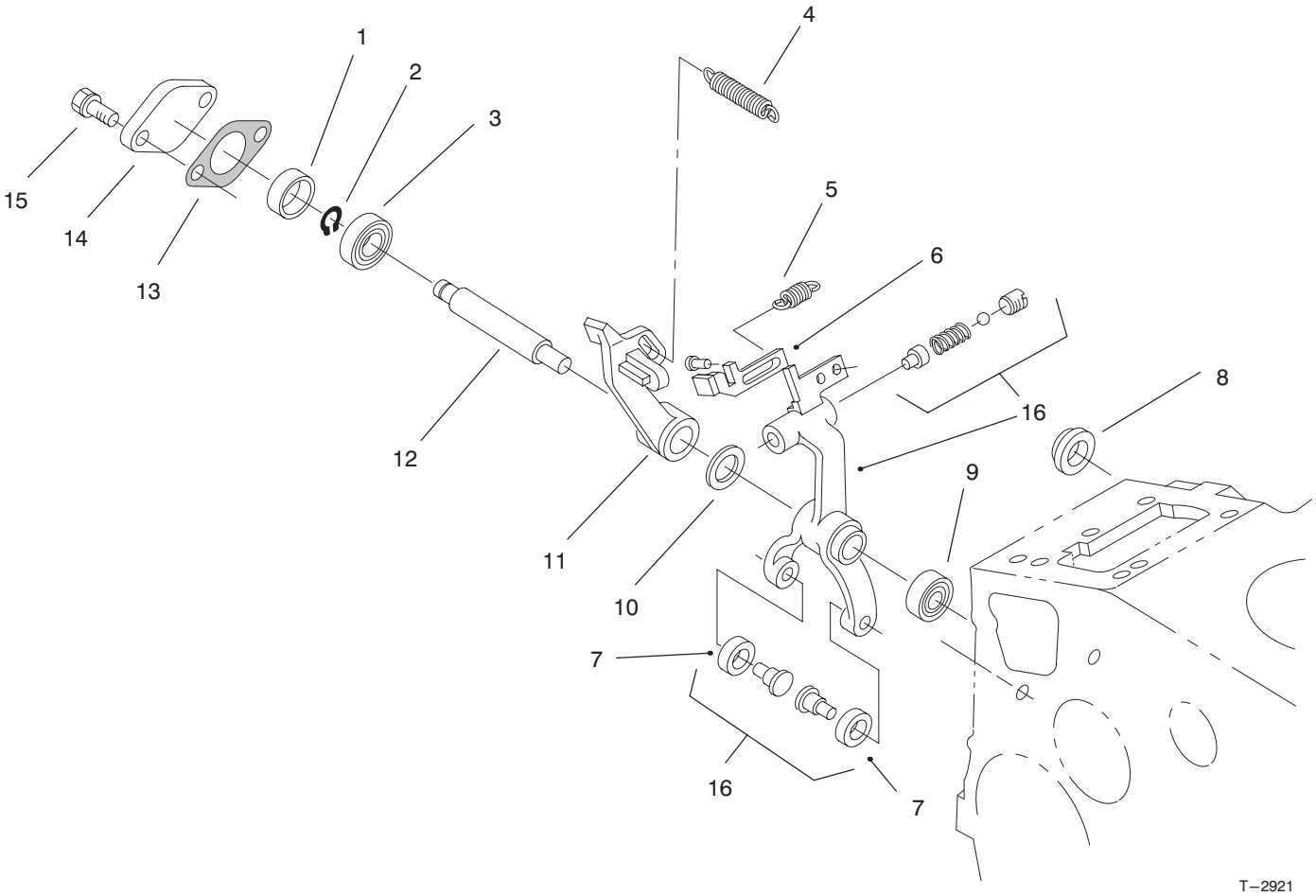

GOVERNOR ASSEMBLY

Ref. No.	Part No.	Description	No. Used
1	98−9567	Collar	1
2	98−9369	Clip−Circular, External	1
3	98−9570	Bearing−Miniature	1
4	98−9681	Spring−Governor	1
5	98−9645	Spring−Start	1
6	98−9660	Lever−Thrust	1
7	98−9672	Roller	2
8	98−9568	Collar	1
9	98−9571	Bearing−Miniature	1
10	98−9593	Washer−Flat	1

Ref. No.	Part No.	Description	No. Used
11	98−9659	Lever−Fork	1
12	98−9566	Shaft−Lever, Fork	1
13	98−9682	Gasket	1
14	98−9569	Cover−Shaft, Fork Lever	1
15	98−9351	Bolt	2
16	99−8380	Complete Lever & Fork (Incl. Ref. #6 & 7)	1
*	98−9672	Asm−Lever, Fork (Incl. Ref. #2, 3 & 10−16)	2

*Not Illustrated

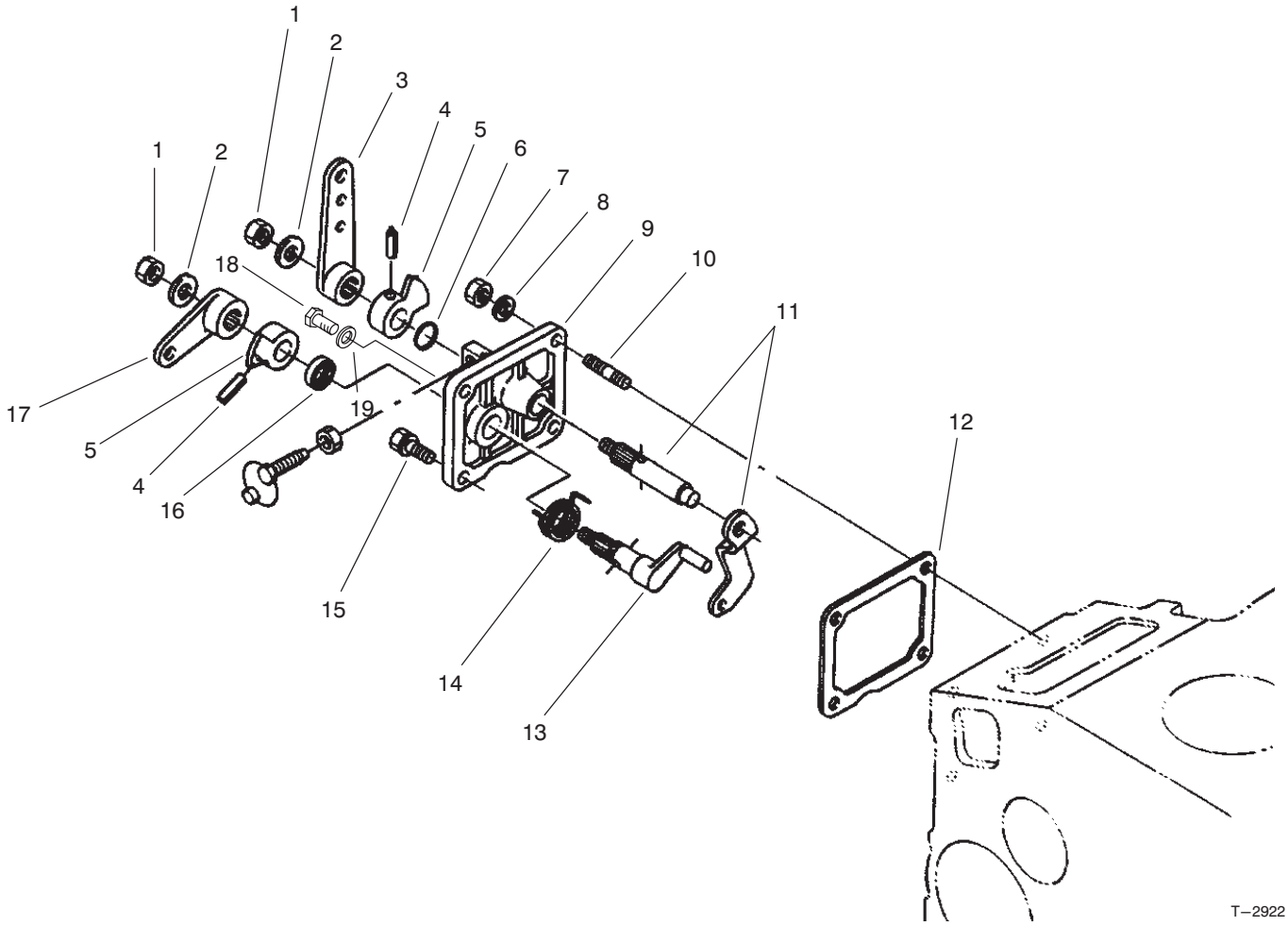

SPEED CONTROL PLATE ASSEMBLY

Ref. No.	Part No.	Description	No. Used
1	98–9589	Nut	2
2	98–9594	Washer–Flat	2
3	98–9662	Lever–Speed Control	1
4	98–7602	Pin–Spring	2
5	98–9572	Lever–Speed Control	2
6	98–9371	O–Ring	1
7	98–7572	Nut	2
8	98–9367	Washer–Lock	2
9	98–9661	Asm–Plate, Control (Incl. Ref. #1–6, 11, 13, 14, 16, & 17)	1

Ref. No.	Part No.	Description	No. Used
10	98–9362	Stud	2
11	98–9658	Asm–Lever, Governor	1
12	98–9637	Gasket	1
13	98–9664	Shaft–Stop Lever	1
14	98–9472	Spring–Return	1
15	98–7692	Bolt	1
16	98–7601	Seal–Oil	1
17	98–9663	Lever–Engine Stop	1
18	99–8348	Bolt	1
19	98–7654	Gasket	1

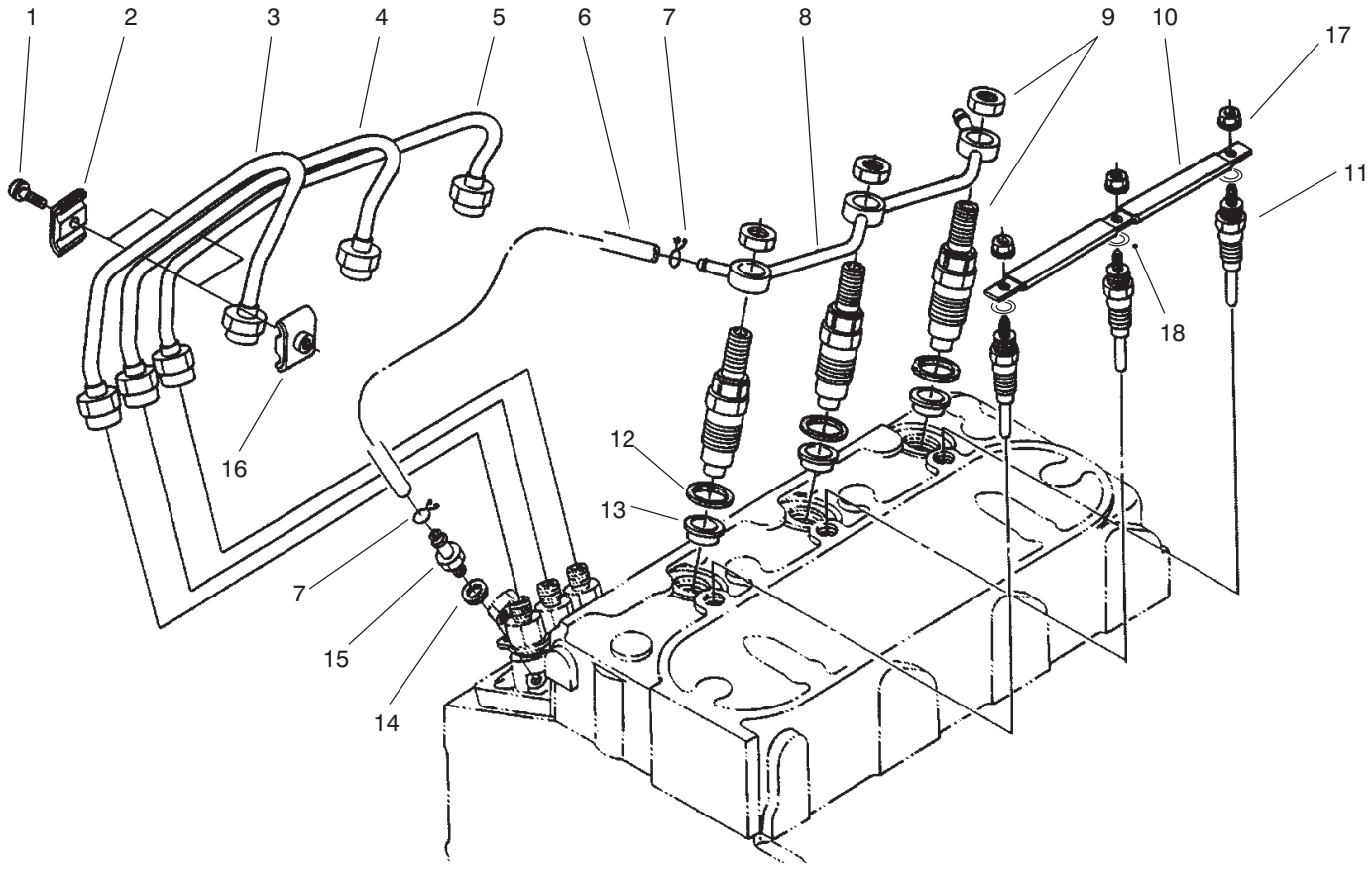

T−2923

NOZZLE HOLDER & GLOW PLUG ASSEMBLY

Ref. No.	Part No.	Description	No. Used
1	98−7684	Screw w/washer	2
2	98−7683	Clamp−Pipe	2
3	98−9622	Pipe−Injection	1
4	98−9654	Pipe−Injection	1
5	98−9655	Pipe−Injection	1
6	98−9624	Asm−Pipe, Overflow (Incl. Ref. #7)	1
7	98−7671	Clip−Pipe	2
8	98−9621	Asm−Pipe, Overflow	1
9	98−9468	Asm−Holder, Nozzle	3

Ref. No.	Part No.	Description	No. Used
10	98−9631	Cord−Glow Plug	1
11	98−9623	Plug−Glow	3
12	98−7676	Gasket	3
13	98−7677	Seat−Heat	3
14	98−7654	Gasket	1
15	98−9431	Screw−Air Bleed	1
16	98−7682	Clamp−Pipe	2
17	99−8377	Nut−Flange	3
18	99−8378	Washer−Plain	3

*Not Illustrated

3322–531

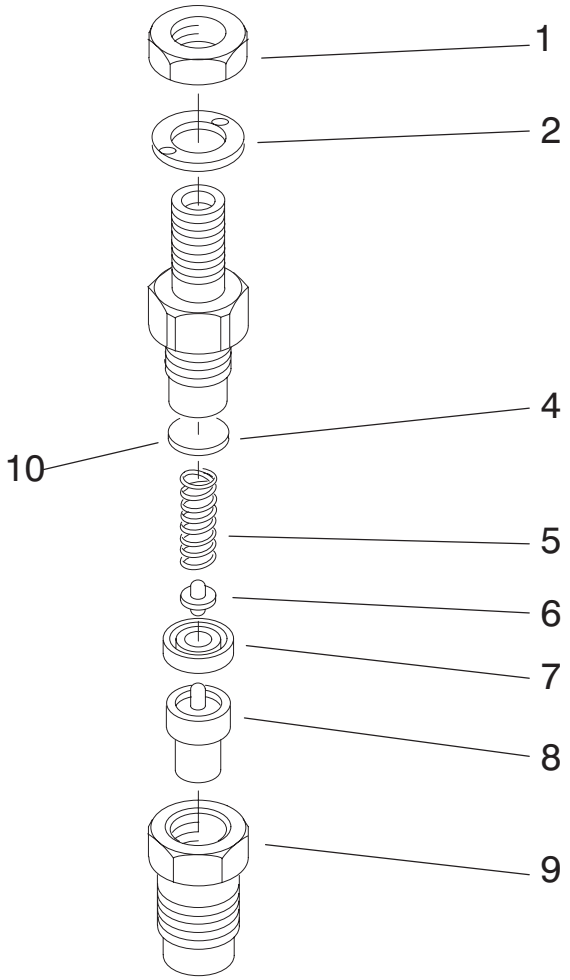

T–2924

NOZZLE HOLDER ASSEMBLY

Ref. No.	Part No.	Description	No. Used
1	99–8301	Nut	3
2	99–8307	Washer	3
4	99–8302	Washer–Adjusting	3
5	99–8303	Spring–Nozzle	3
6	99–8305	Push Rod	3
7	99–8304	Piece–Distance	3
8	99–8308	Piece–Nozzle	3
9	99–8306	Nut–Nozzle	3
10	99–8309	Asm–Washer, Adjusting	3
*	99–8310	Washer–Adj. (0.10mm)	3
*	99–8311	Washer–Adj. (0.20mm)	3

Ref. No.	Part No.	Description	No. Used
10	99–8312	Washer–Adj. (0.30mm)	3
*	99–8313	Washer–Adj. (0.40mm)	3
*	99–8314	Washer–Adj. (0.50mm)	3
*	99–8315	Washer–Adj. (0.52mm)	3
*	99–8316	Washer–Adj. (0.54mm)	3
*	99–8317	Washer–Adj. (0.56mm)	3
*	99–8318	Washer–Adj. (0.58mm)	3
*	99–8319	Washer–Adj. (0.80mm)	3
*	98–9468	Asm–Holder, Nozzle (Incl. Ref. #1–9)	3

*Not Illustrated

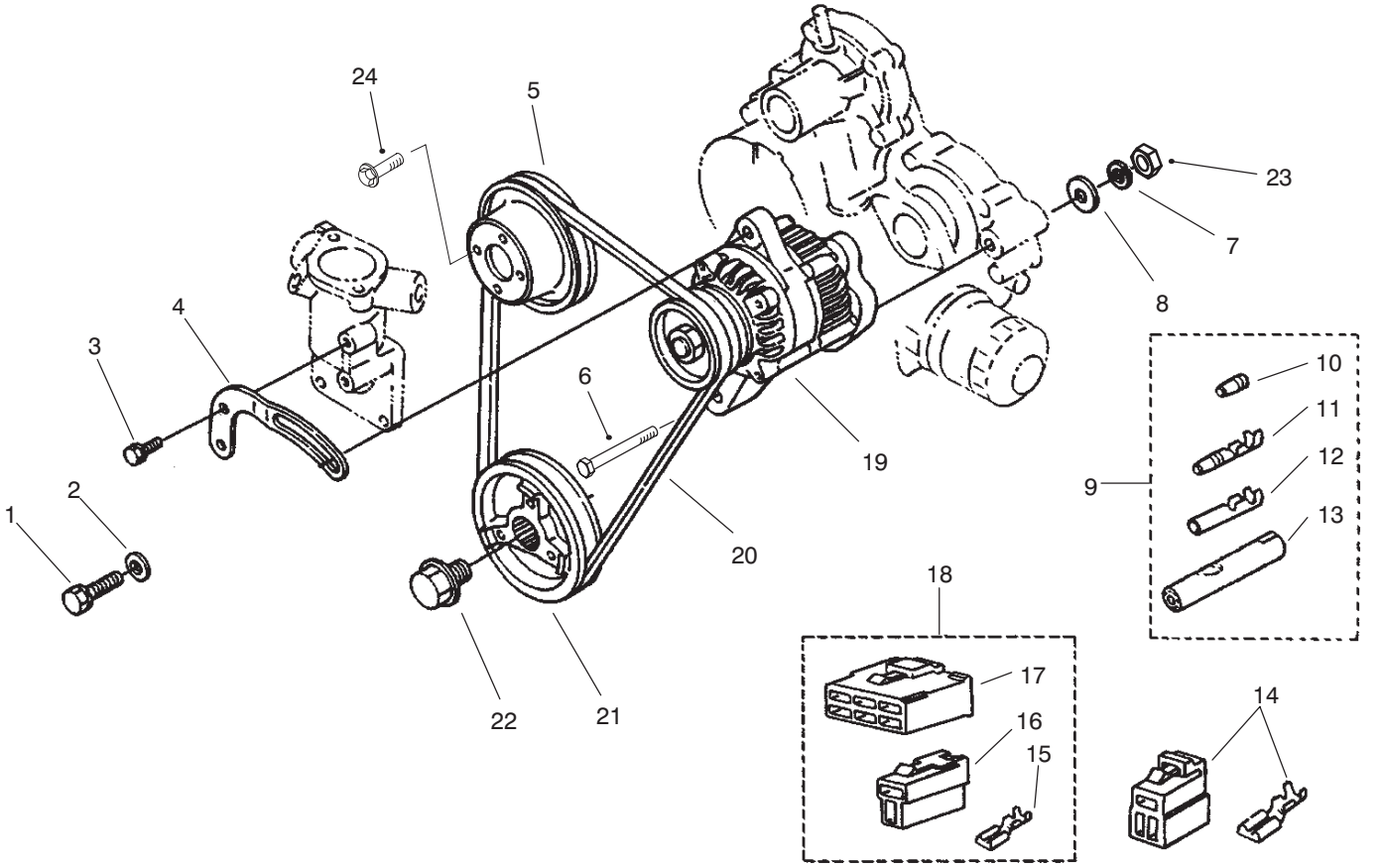

ALTERNATOR & PULLEY ASSEMBLY

Ref. No.	Part No.	Description	No. Used
1	98−7697	Bolt	1
2	98−7698	Washer−Flat	1
3	98−7692	Bolt	1
4	98−9573	Stay−Dynamo	1
5	98−9584	Pulley−Fan	1
6	98−9360	Bolt	1
7	98−9368	Washer−Lock	1
8	98−9366	Washer−Flat	1
9	98−9700	Asm−Terminal (Incl. Ref. #10−13)	1
10	98−9701	Terminal	1
11	98−9702	Sleeve	1
12	98−9703	Terminal	1

Ref. No.	Part No.	Description	No. Used
13	98−9704	Sleeve	1
14	98−9602	Asm−Coupler, Lock	1
15	98−9699	Terminal	7
16	98−9698	Connector	1
17	98−9697	Connector	1
18	98−9696	Asm−Coupler (Incl. Ref. #15−17)	1
19	98−9474	Asm−Alternator	1
20	98−9676	V−Belt	1
21	98−9473	Pulley−Fan Drive	1
22	98−9585	Bolt	1
23	98−7737	Nut	1
24	99−8363	Bolt−Flange	4

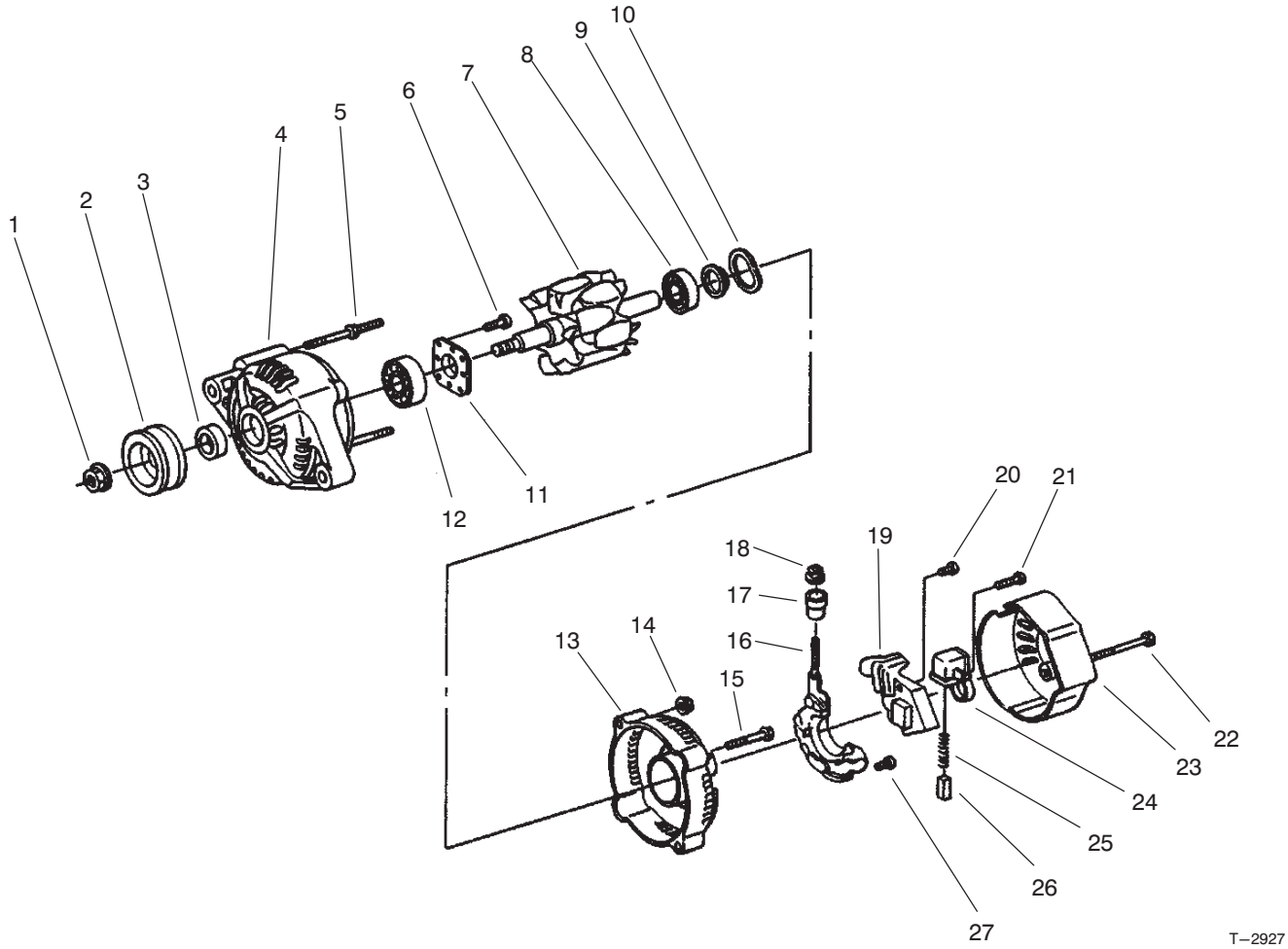

ALTERNATOR ASSEMBLY

Ref. No.	Part No.	Description	No. Used
1	98–7708	Nut	1
2	98–9453	Pulley–Dynamo	1
3	98–7709	Collar	1
4	98–7714	Frame–Drive End	1
5	98–7717	Bolt–Through	2
6	98–7716	Screw–RH	4
7	98–7710	Rotor	1
8	98–7712	Bearing–Ball	1
9	98–7711	Cover–Bearing	1
10	98–7713	Washer–Thrust	1
11	98–7715	Plate–Retainer	1
12	98–7718	Bearing–Ball	1
13	98–7719	Frame–End	1
14	98–7730	Nut	2
15	98–7731	Bolt	2

Ref. No.	Part No.	Description	No. Used
16	98–7721	Asm–Rectifier	1
17	98–7722	Bushing–Insulation	1
18	98–7732	Nut	1
19	98–7733	Asm–Regulator	1
20	98–7726	Screw–RH	2
21	98–7728	Screw–RH	1
22	98–7729	Bolt	3
23	98–7720	Cover–End	1
24	98–7723	Holder–Brush	1
25	98–7725	Spring–Brush	2
26	98–7724	Brush	2
27	98–7727	Screw–RH	6
*	98–9474	Asm–Alternator (Incl. Ref. #1–27)	1

*Not Illustrated

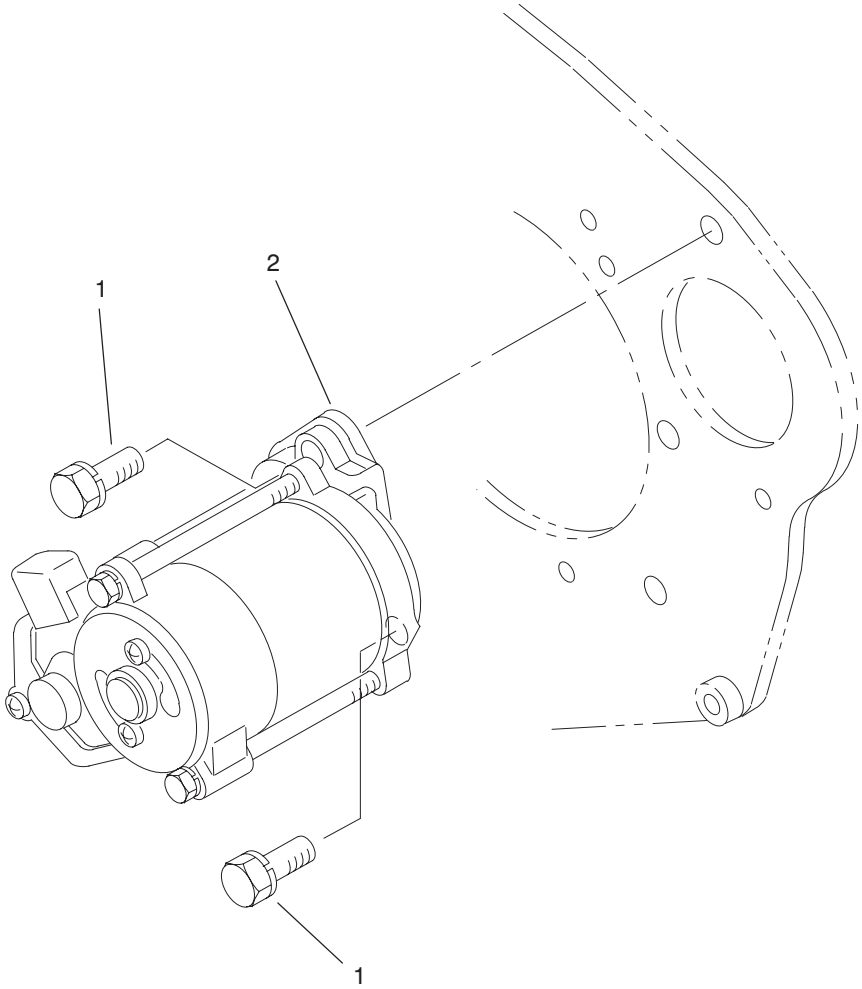

T−2928

STARTER MOUNT ASSEMBLY

Ref. No.	Part No.	Description	No. Used
1	98−7697	Bolt	2
2	98−9705	Asm−Starter	1

Ref. No.	Part No.	Description	No. Used

3322–531

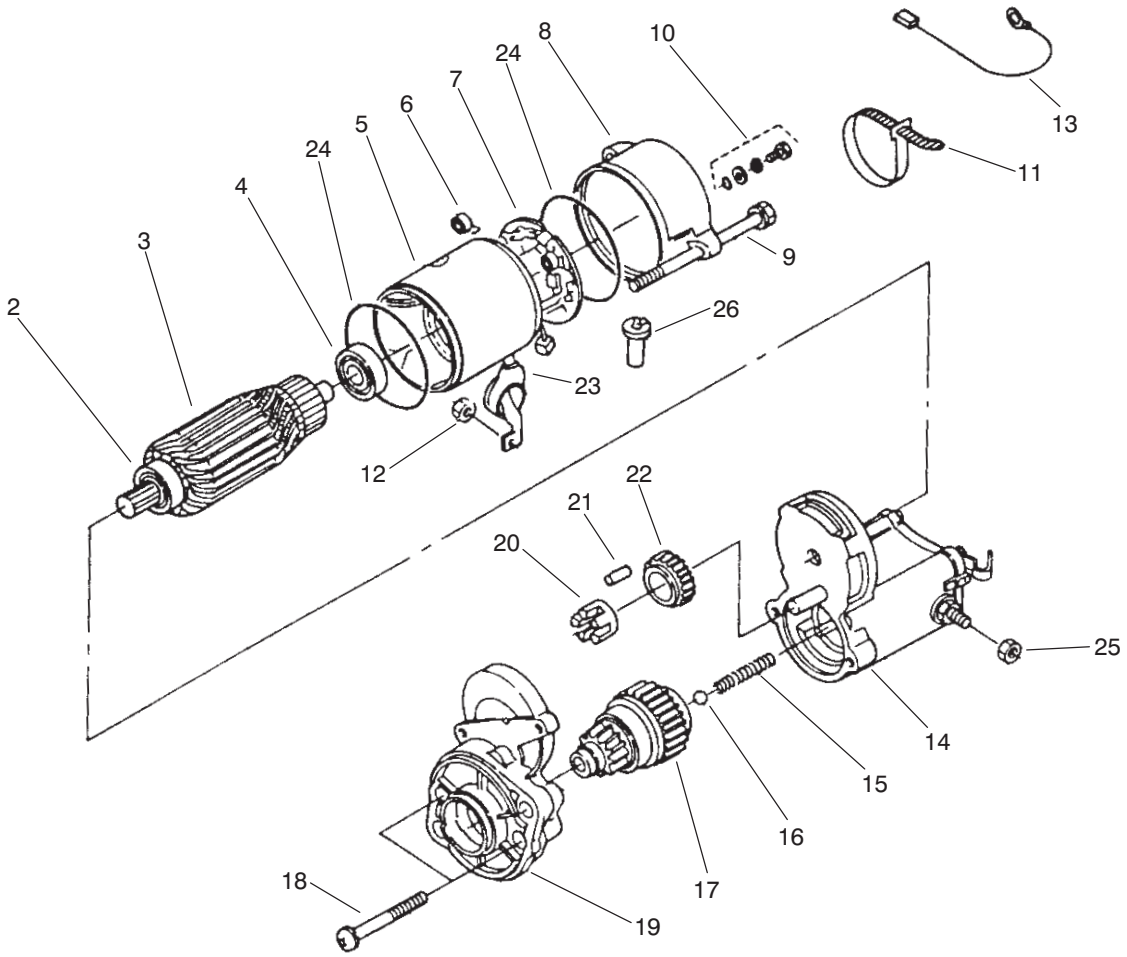

T–3081

STARTER ASSEMBLY

Ref. No.	Part No.	Description	No. Used
2	98–7743	Bearing–Ball	1
3	98–7742	Asm–Armature (Incl. Ref. #2 & 4)	1
4	98–7744	Bearing–Ball	1
5	98–7741	Asm–Yoke	1
6	98–7750	Spring–Brush	4
7	98–7749	Asm–Holder, Brush (Incl. Ref. #6)	1
8	99–8370	Frame–End	1
9	98–9549	Bolt	2
10	98–7758	Asm–Bolt	2
11	98–9712	Band–Cover	1
12	99–8371	Nut–Hex.	1
13	98–9711	Cord–Stop, Solenoid	1
14	99–8372	Asm–Switch, Magnetic	1

Ref. No.	Part No.	Description	No. Used
15	98–7754	Spring	1
16	98–7755	Ball	1
17	99–8373	Clutch	1
18	98–7756	Bolt	2
19	99–8374	Frame–Drive End	1
20	98–7752	Retainer	1
21	98–7753	Roller	5
22	98–7751	Gear	1
23	99–8375	Cover–Cord	1
24	98–7757	O–Ring	2
25	99–8376	Nut	1
26	98–7759	Pipe–Drain	1
*	98–9705	Asm–Starter (Incl. Ref. #2–26)	1

*Not Illustrated

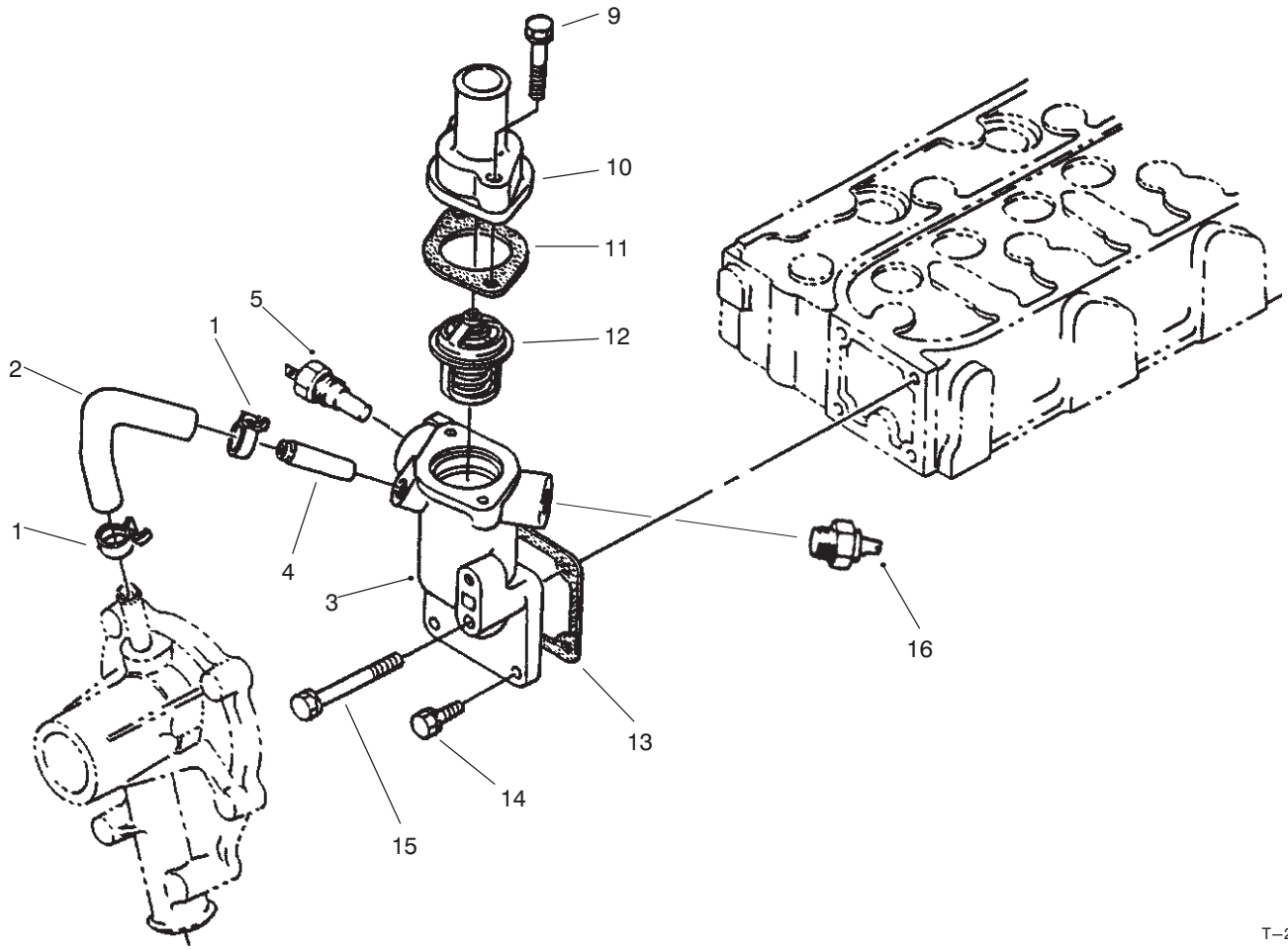

T−2930

WATER FLANGE & THERMOSTAT ASSEMBLY

Ref. No.	Part No.	Description	No. Used
1	98−9579	Band Pipe	2
2	98−9578	Pipe−Return, Water	1
3	98−9713	Asm−Flange, Water (Incl. Ref. #4)	1
4	98−9580	Pipe−Return, Water	1
5	98−9719	Thermoswitch	1
9	98−7777	Bolt	2

Ref. No.	Part No.	Description	No. Used
10	98−9471	Cover−Thermostat	1
11	98−7776	Gasket	1
12	98−7778	Asm−Thermostat	1
13	98−9638	Gasket−Flange, Water	1
14	98−7692	Bolt	3
15	98−9356	Bolt	1
16	98−9346	Switch	1

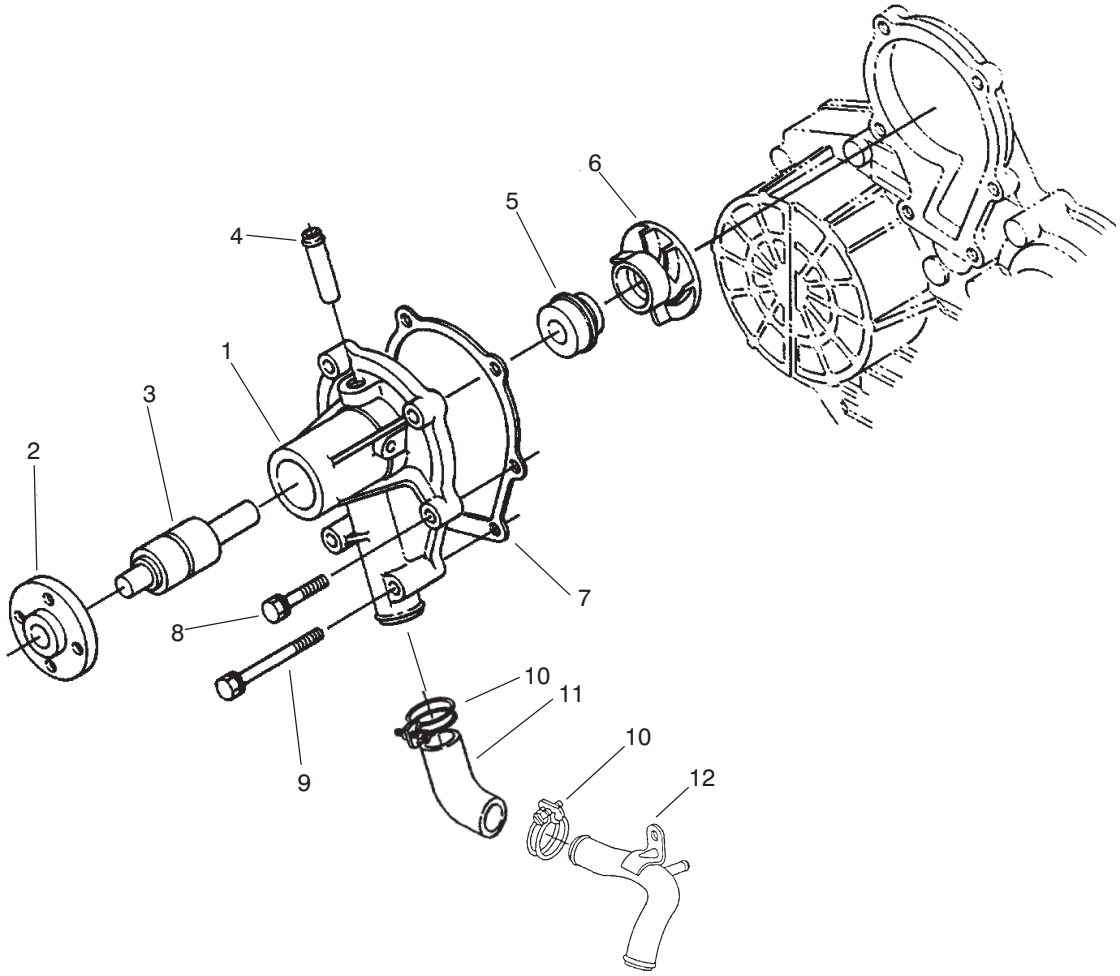

T−2931

WATER PUMP ASSEMBLY

Ref. No.	Part No.	Description	No. Used
1	98−9575	Asm−Pump, Water (Incl. Ref. #2−6)	1
2	98−9582	Flange−Pump, Water	1
3	98−9583	Bearing	1
4	98−9577	Pipe−Return, Water	1
5	98−9576	Asm−Seal	1
6	98−9581	Impeller−Water	1

Ref. No.	Part No.	Description	No. Used
7	98−9632	Gasket−Pump, Water	1
8	98−9353	Bolt	1
9	98−9357	Bolt	4
10	98−9717	Clamp	2
11	98−9574	Pipe−Water	1
12	99−8379	Pipe−Water	1

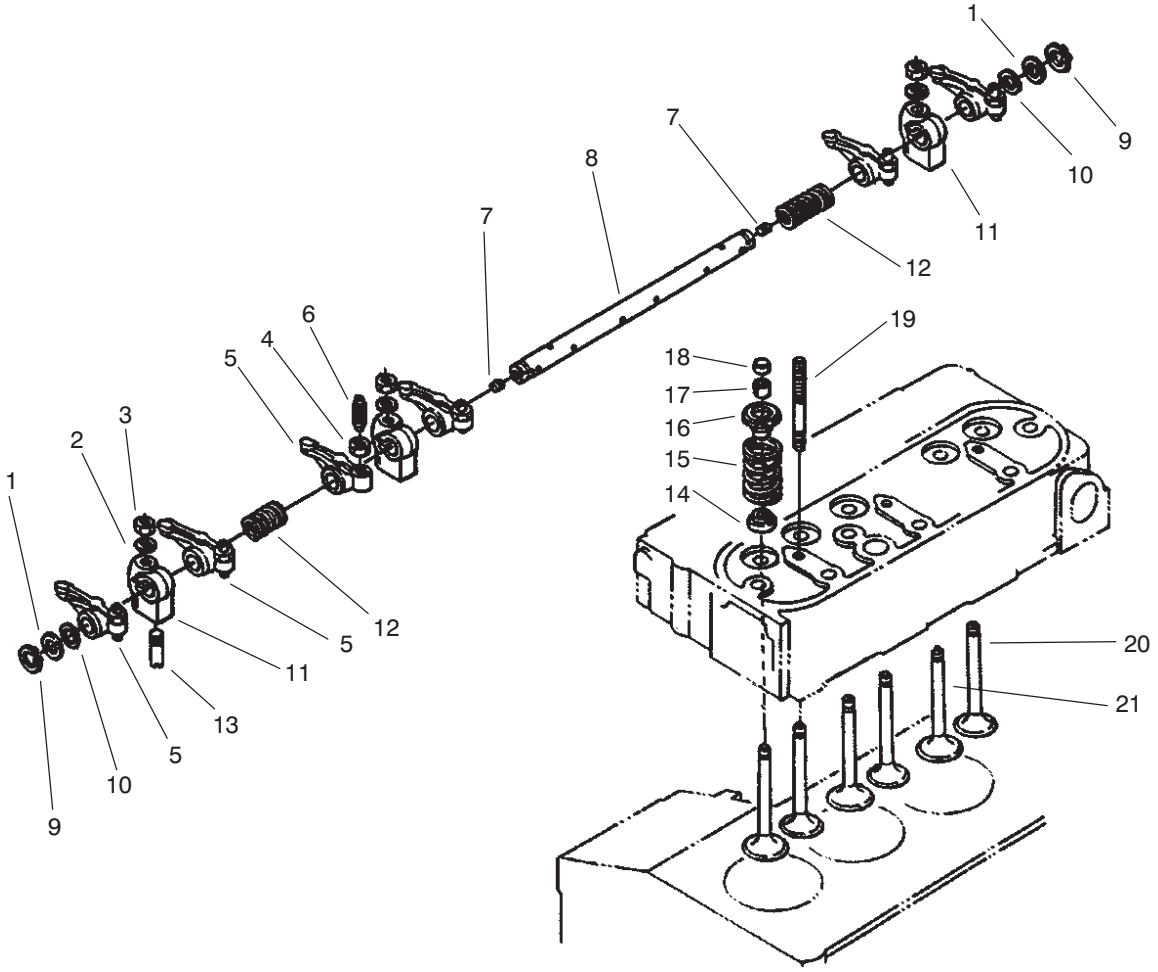

VALVE & ROCKER ARM ASSEMBLY

Ref. No.	Part No.	Description	No. Used
1	98−9508	Washer−Shaft, Rocker Arm	2
2	98−9385	Washer−Flat	3
3	98−9393	Nut	3
4	98−9503	Nut	6
5	98−9501	Asm−Arm, Rocker (Incl. Ref. #4 & 6)	6
6	98−9502	Screw−Adjusting	6
7	98−9365	Screw−Set	2
8	98−9612	Asm−Shaft, Rocker Arm (Incl. Ref. #7)	1
9	98−9370	Clip−Circular, External	2
10	98−9507	Washer−Shaft, Rocker Arm	2

Ref. No.	Part No.	Description	No. Used
11	98−9505	Bracket−Rocker Arm	3
12	98−9504	Spring−Rocker Arm	2
13	98−9391	Screw−Set	1
14	99−8385	Seal−Valve Stem	6
15	98−9626	Spring−Valve	6
16	98−9498	Retainer−Valve Spring	6
17	98−9390	Collet−Valve Spring Set	6
18	98−9497	Cap−Valve	6
19	98−9506	Stud	3
20	98−9625	Valve−Exhaust	3
21	98−9494	Valve−Inlet	3

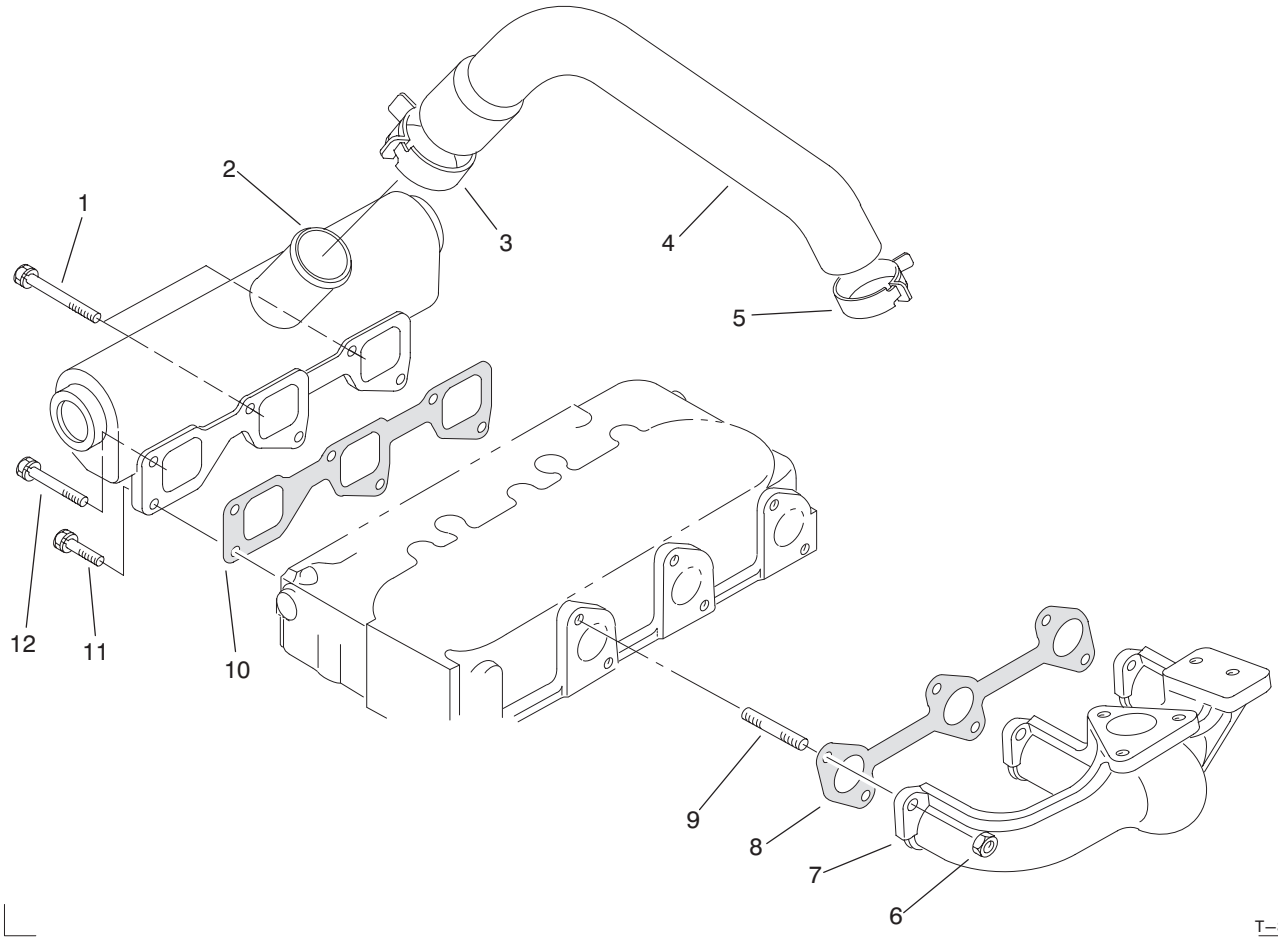

EXHAUST MANIFOLD & GASKET ASSEMBLY

Ref. No.	Part No.	Description	No. Used
1	99–8320	Bolt	2
2	99–8321	Manifold–Inlet	1
3	99–8322	Band–Pipe	1
4	99–8323	Hose–Inlet	1
5	99–8324	Band–Pipe	1
6	98–9665	Nut	6

Ref. No.	Part No.	Description	No. Used
7	99–8326	Manifold–Exhaust	1
8	99–8327	Gasket–Exhaust	1
9	98–9588	Stud	6
10	99–8329	Gasket–Intake	1
11	98–7568	Bolt	3
12	98–7496	Bolt	1

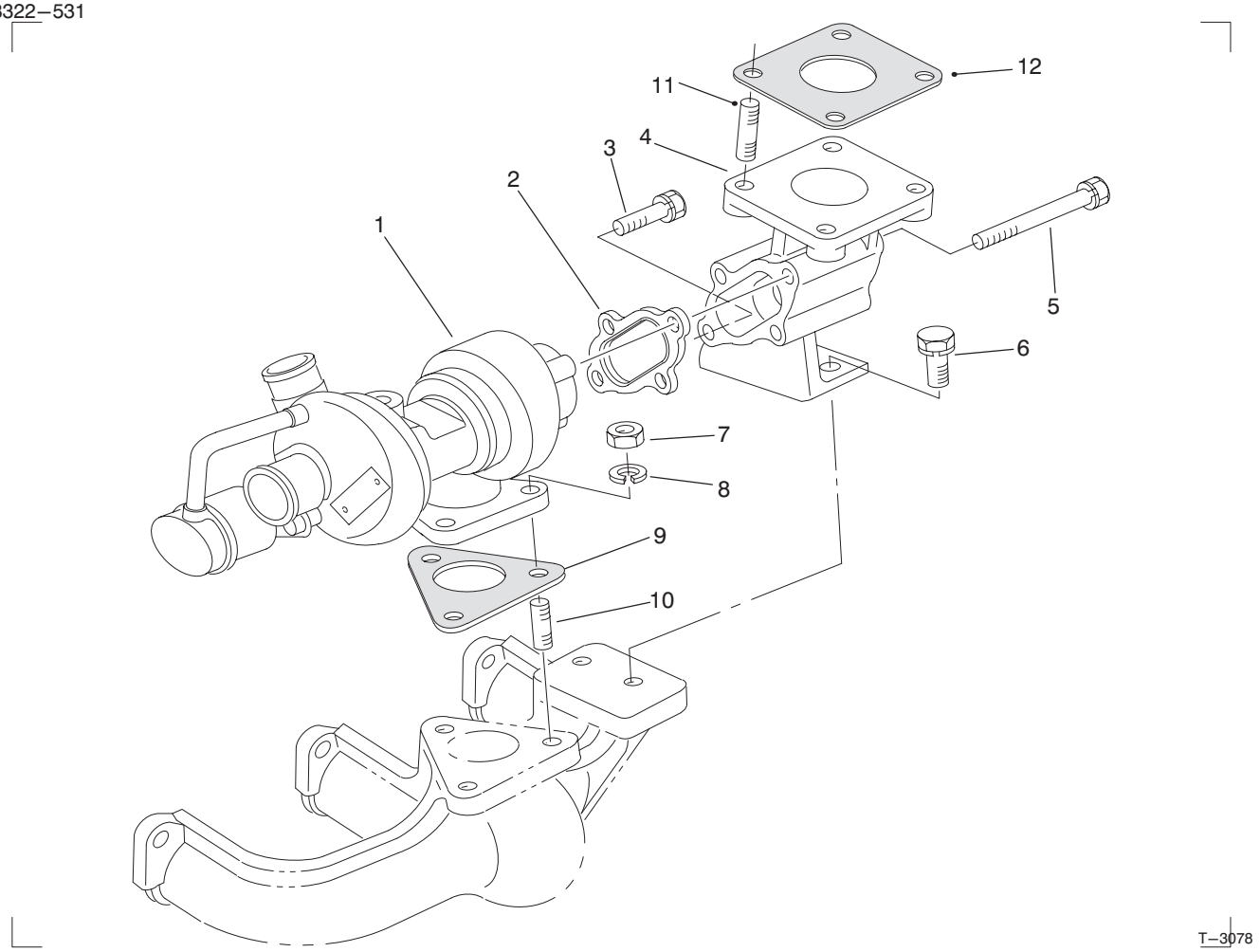

TURBO CHARGER ASSEMBLY

Ref. No.	Part No.	Description	No. Used
1	99−8332	Asm−Charger, Turbo	1
2	99−8333	Gasket	1
3	99−8334	Bolt	1
4	99−8335	Flange−Muffler	1
5	99−8336	Bolt	3
6	98−7610	Bolt	2

Ref. No.	Part No.	Description	No. Used
7	98−7534	Nut	3
8	99−8339	Washer−Lock	3
9	99−8340	Gasket	1
10	99−8341	Stud	3
11	99−8342	Stud	4
12	99−8343	Gasket−Muffler	1

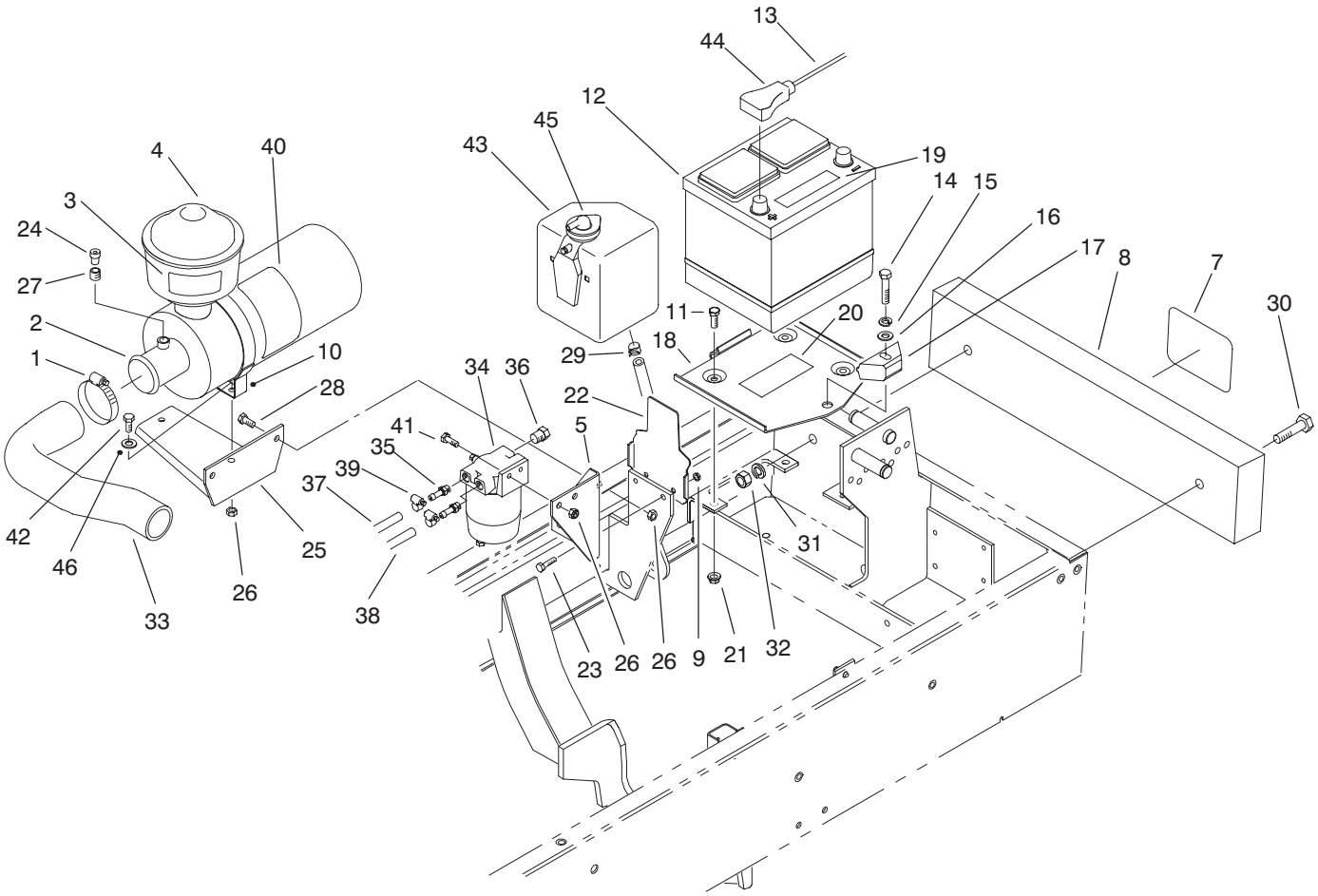

ENGINE COMPONENTS ASSEMBLY

Ref. No.	Part No.	Description	No. Used
1	2412−42	Clamp−Hose	1
2	98−4517	Asm−Air Cleaner (Incl. Ref. #40)	1
3	93−6692	Decal−Starting Fluid	1
4	48−7430	Pre−Cleaner	1
5	98−4578	Bracket−Fuel Filter	1
7	62−5550	Decal−Toro	1
8	75−6680	Bar−Weight	1
9	32128−33	Nut−Lock	2
10	98−4525	Bracket−Mount, Air Cleaner	1
11	322−4	Screw−HH	3
12		Battery (Type 26, 530 Amp.)	1
13	98−4599	Asm−Battery Cable (+) (Incl. Ref. #44)	1
14	323−9	Screw−HH	1
15	3253−21	Washer−Lock	1
16	3256−24	Washer−Flat	1
17	66−2490	Clamp−Battery	1
18	94−7343	Base−Battery	1
19	93−6668	Decal−Battery	1
20	93−7276	Decal−Danger	1
21	32128−20	Nut−Lock	3
22	98−4576	Bracket−Reservoir, Water	1
23	321−5	Screw−HH	2

Ref. No.	Part No.	Description	No. Used
24	93−9164	Indicator−Service	1
25	98−4518	Bracket−Air Cleaner	1
26	3296−29	Nut−Lock	8
27	94−1416	Asm−Adapter, Indicator	1
28	322−5	Screw−HH	2
29	92−2379	Clamp−Hose	1
30	325−12	Screw−HH	2
31	3253−27	Washer−Lock	2
32	3217−9	Nut−Hex.	2
33	98−4510	Hose−Air Cleaner	1
34	98−9305	Filter−Water/Fuel Separator	1
35	353−783	Fitting−Fuel	1
36	281−13	Plug−Pipe	2
37	71−3381	Hose−Fuel	1
38	95−4275	Hose−Fuel	1
39	2412−108	Clamp	4
40	98−9788	Decal−Instructions	1
41	3234−29	Screw	2
42	322−6	Screw−HH	2
43	98−9323	Asm−Expansion Tank (Incl. Ref. #45)	1
44	28−1280	Boot−Cable	1
45		Cap−Expansion Tank	1
46	3256−24	Washer−Flat	2

3322−531

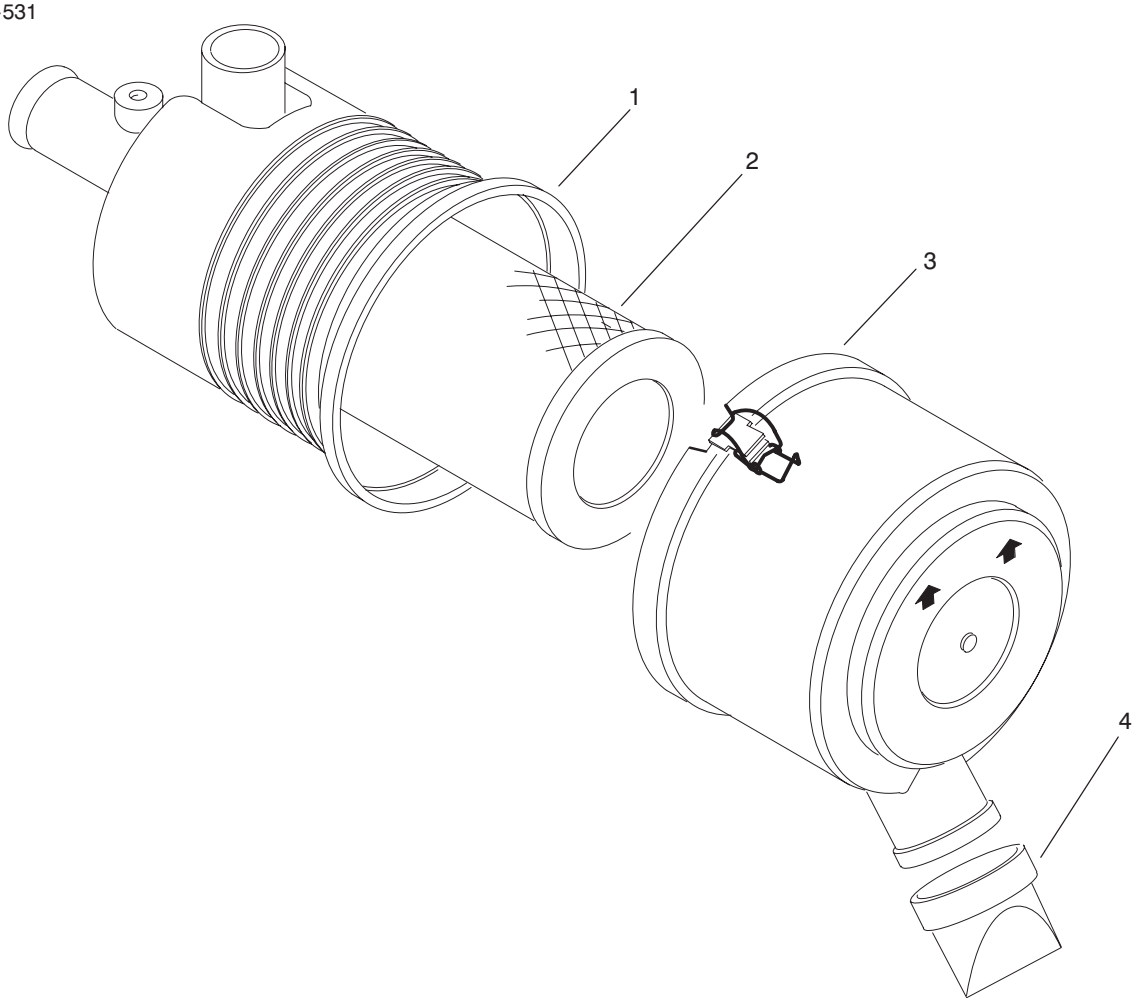

T−2903

AIR CLEANER ASSEMBLY

Ref. No.	Part No.	Description	No. Used
1		Asm−Body	1
2	98−9763	Asm−Element	1

Ref. No.	Part No.	Description	No. Used
3	98−9771	Asm−Cover	1
4	94−1414	Valve−Vacuator	1

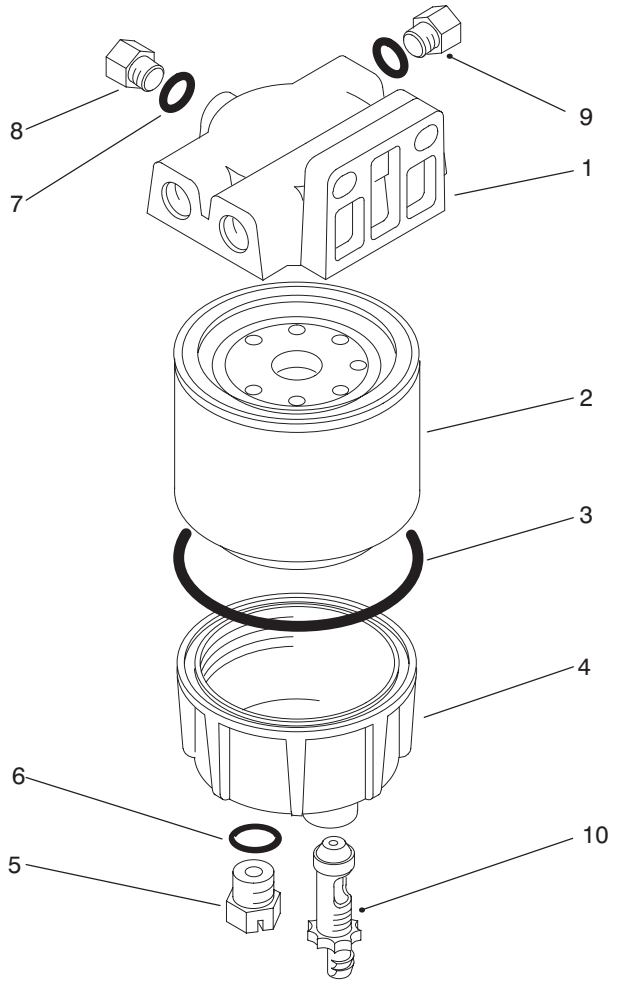

T–2904

FILTER, WATER/FUEL SEPARATOR ASSEMBLY

Ref. No.	Part No.	Description	No. Used
1	98–9772	Head–Filter	1
2	98–9764	Element–Spin On	1
3	98–9774	O–Ring, Filter Base	1
4	98–9775	Base–Filter	1
5	98–9773	Plug–Base, Filter (Incl. Ref. #6)	1

Ref. No.	Part No.	Description	No. Used
6	237–42	O–Ring	1
7	237–78	O–Ring	1
8	98–9776	Plug–Head, Filter (Incl. Ref. 37)	1
9	285–22	Plug–Pipe	1
10	98–9777	Asm–Valve, Drain	1

3322–531

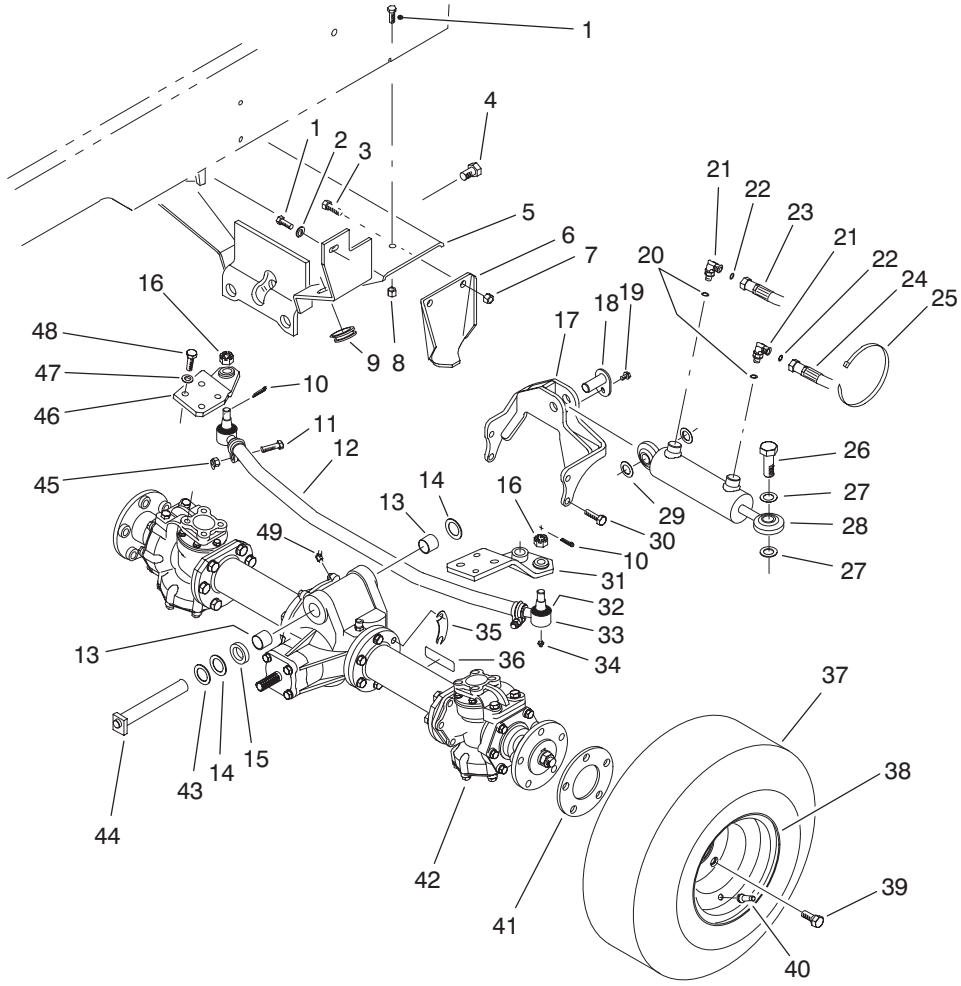

T–1325–1

REAR AXLE INSTALLATION ASSEMBLY

Ref. No.	Part No.	Description	No. Used
1	323–7	Screw–HH	4
2	3256–24	Washer–Flat	2
3	325–5	Screw–HH	4
4	327–2	Screw–HH	1
5	75–1100	Support–Axle	1
6	83–5110	Stop–Axle	2
7	3296–23	Nut–Lock	4
8	3296–39	Nut–Lock	2
9	237–165	Grommet	2
10	3272–11	Pin–Cotter	1
11	323–9	Screw–HH	2
12	83–5020	Asm–Tube & Clamp	1
13	67–1750	Bushing–Sleeve	2
14	56–2460	Washer–Flat	2
15	83–5040	Washer	1
16	32136–13	Nut–Slotted	2
17	83–5100	Support–Cylinder	1
18	83–5150	Pin–Cylinder	1
19	32144–4	Screw–TAP	1
20	237–78	O–Ring	2
21	340–132	Fitting–Hydraulic 90° (Incl. Ref. #20 & 22)	2
22	237–21	O–Ring	2
23	75–6220	Hose–Hydraulic	1
24	75–6230	Hose–Hydraulic	1
25	3290–378	Tie–Cable	1
26	82–6910	Screw–HH	4

Ref. No.	Part No.	Description	No. Used
27	67–9410	Washer–Thrust	2
28	83–5030	Asm–Hydraulic Cylinder	1
29	83–5160	Shim	2
30	48–9480	Screw–HH	4
31	83–4930	Arm–Steering LH	1
32	71–4760	Seal–Tie Rod End	2
33	71–4740	Asm–Tie Rod End (Incl. Ref. #16, 32 & 34)	2
34	302–55	Fitting–Grease	2
35	83–5180	Shim–Axle	2
36	93–6697	Decal–Lube	1
37	231–141	Tire	2
38	217–121	Rim	2
39	71–4450	Bolt–Wheel	10
40	232–35	Valve–Stem	2
41	83–7460	Spacer–Wheel	2
42	68–6823	Asm–Axle	1
43	5–1226	Washer	2
44	75–4180	Pin–Rear Axle	1
45	3296–39	Nut–Lock	2
46	83–4950	Arm–Steering RH	1
47	48–9220	Washer–Flat	8
48	48–7780	Screw–HH	8
49	302–11	Fitting–Grease	1
*	83–5010	Asm–Tie Rod (Incl. Ref. #11, 12, 16, 32–34 & 45)	1

*Not Illustrated

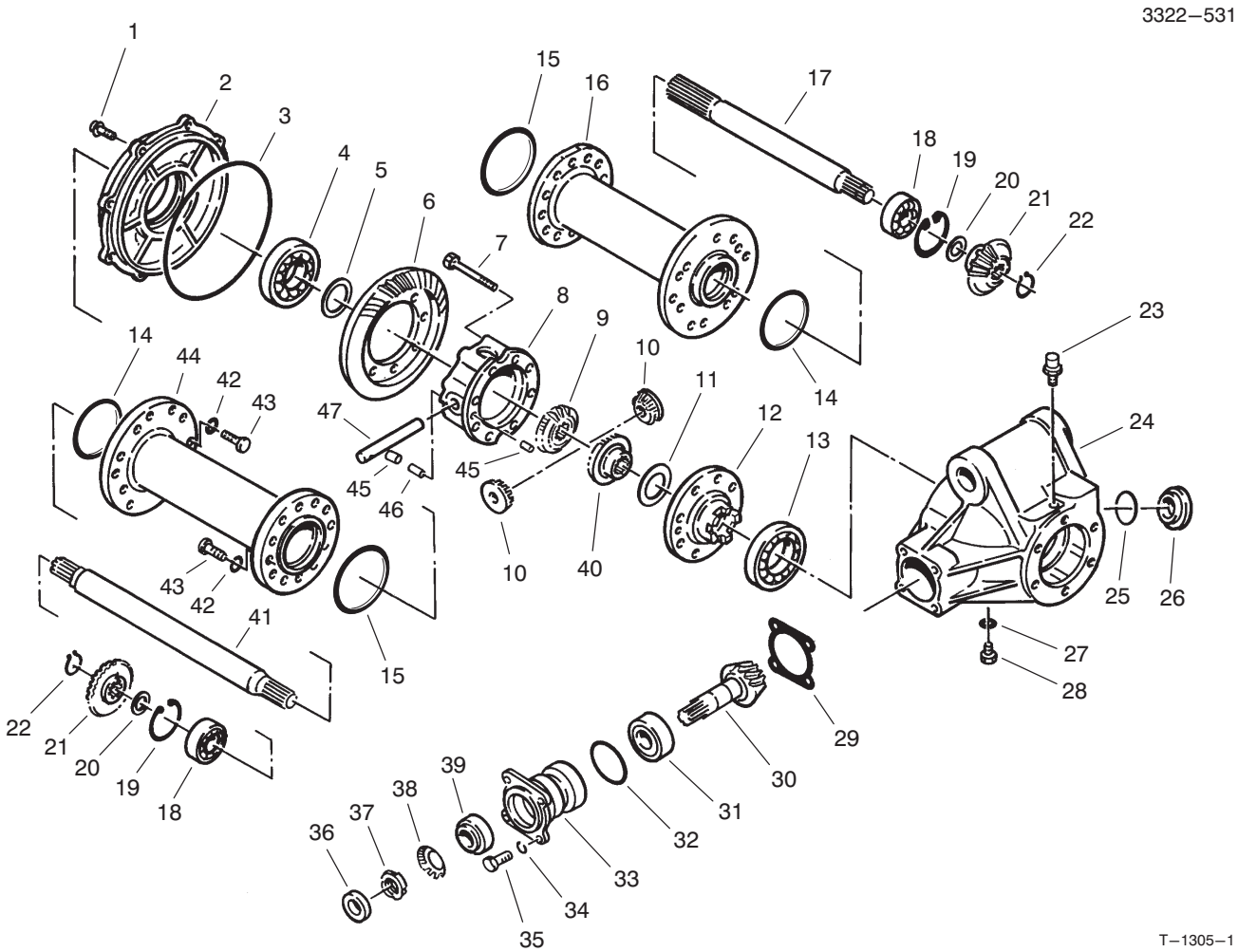

REAR AXLE ASSEMBLY NO. 68–6823

Ref. No.	Part No.	Description	No. Used
1	72–5800	Bolt	8
2	72–4880	Cover	1
3	72–4890	O–Ring	1
4	251–344	Bearing–Ball	1
5	72–4960	Shim .1 mm	1
*	72–4970	Shim .15 mm	1
*	72–4980	Shim .5 mm	1
*	72–4990	Shim .8 mm	1
*	72–5000	Shim 1.0 mm	1
*	72–5010	Shim 1.2 mm	1
6		Gear–Bevel	1
7	72–5810	Bolt	8
8	72–4900	Case–Differential	1
9	72–4930	Gear–Side, Differential	1
10	72–4950	Gear–Pinion, Differential	2
11	72–5040	Washer–Gear, Diff.	1
12	72–4910	Flange–Case, Diff.	1
13	251–345	Bearing–Ball	1
14	93–3664	O–Ring	2
15	93–3665	O–Ring	2
16	83–5270	Tube–Axle, RH	1
17	83–5280	Axle–RH	1
18	251–350	Bearing–Ball	2
19	72–5360	Ring–Retaining	2
20	72–5100	Spacer	2
21	72–5090	Gear–Bevel	2

Ref. No.	Part No.	Description	No. Used
22	72–5370	Ring–Retaining	2
23	72–5130	Vent	1
24	72–4870	Case–Differential	1
25	72–5140	O–Ring	1
26	72–5150	Plug	1
27	72–5840	Gasket	1
28	72–5820	Plug	1
29	72–5160	Shim .1mm	1
*	72–5170	Shim .15 mm	1
*	72–5180	Shim .5 mm	1
*	72–5190	Shim .8 mm	1
*	72–5200	Shim 1.0 mm	1
*	72–5210	Shim 1.2 mm	1
30		Gear–Pinion	1
31	254–108	Bearing–Roller, Tapered	1
32	72–5460	O–Ring	1
33	83–5350	Case–Bearing	1
34	42–9850	Washer–Lock	8
35	48–9460	Bolt–HH	4
36	83–5360	Seal–Oil	1
37	83–5340	Nut–Bearing	1
38	83–5330	Washer–Bearing	1
39	254–109	Bearing–Roller, Tapered	1
40	72–4940	Gear–Side, Differential	1
41	83–5310	Axle–LH	1
42	42–9600	Washer–Lock	24

3322−531

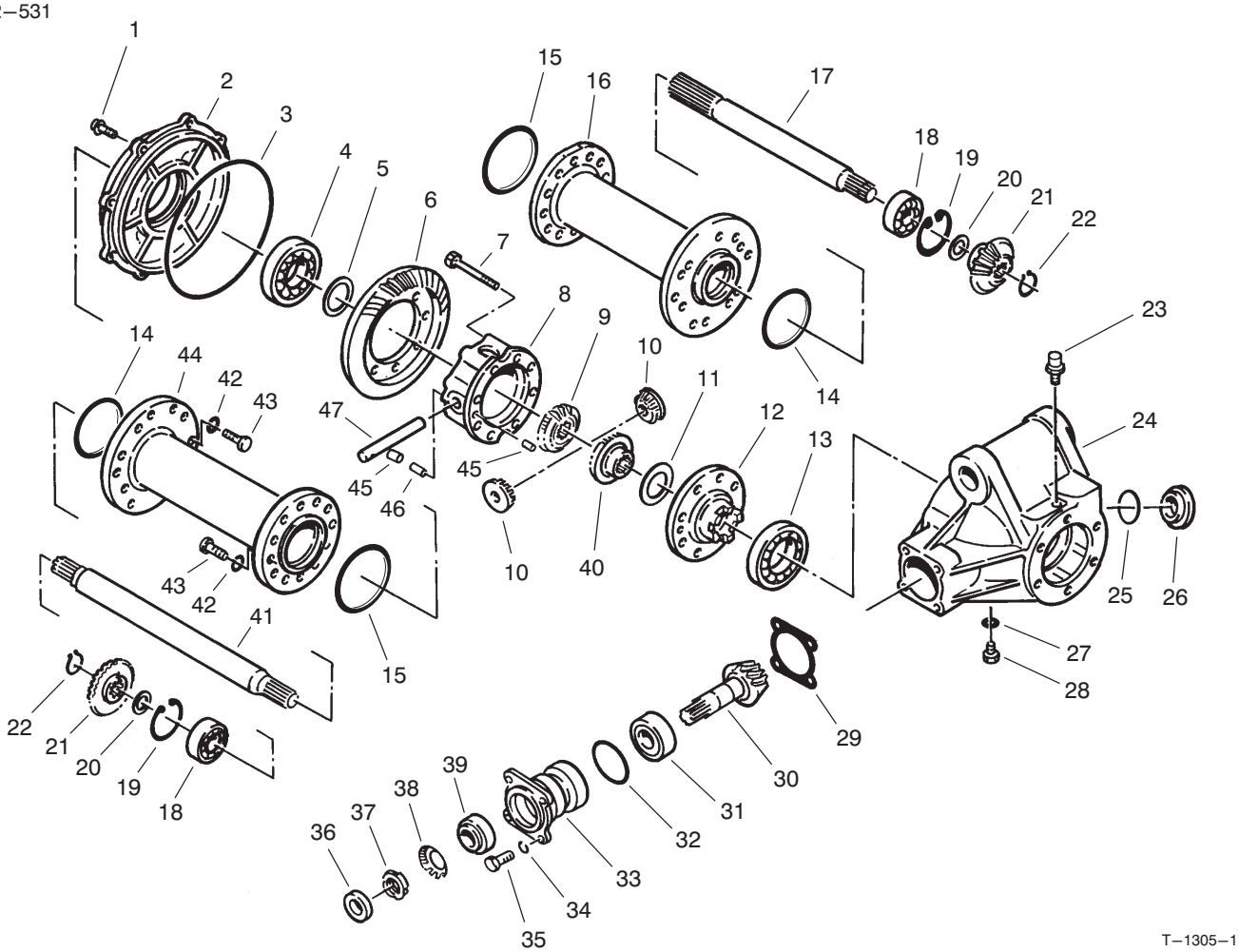

REAR AXLE ASSEMBLY NO. 68−6823 (Continued)

Ref. No.	Part No.	Description	No. Used
43	48−9470	Bolt	24
44	83−5290	Tube−Axle, LH	1
45	72−5030	Pin−Dowel	2
46	72−5440	Pin−Spring	1

Ref. No.	Part No.	Description	No. Used
47	72−5020	Shaft−Pinion	1
*	83−5370	Asm−Ring & Pinion (Incl. Ref.#6 & 30)	1

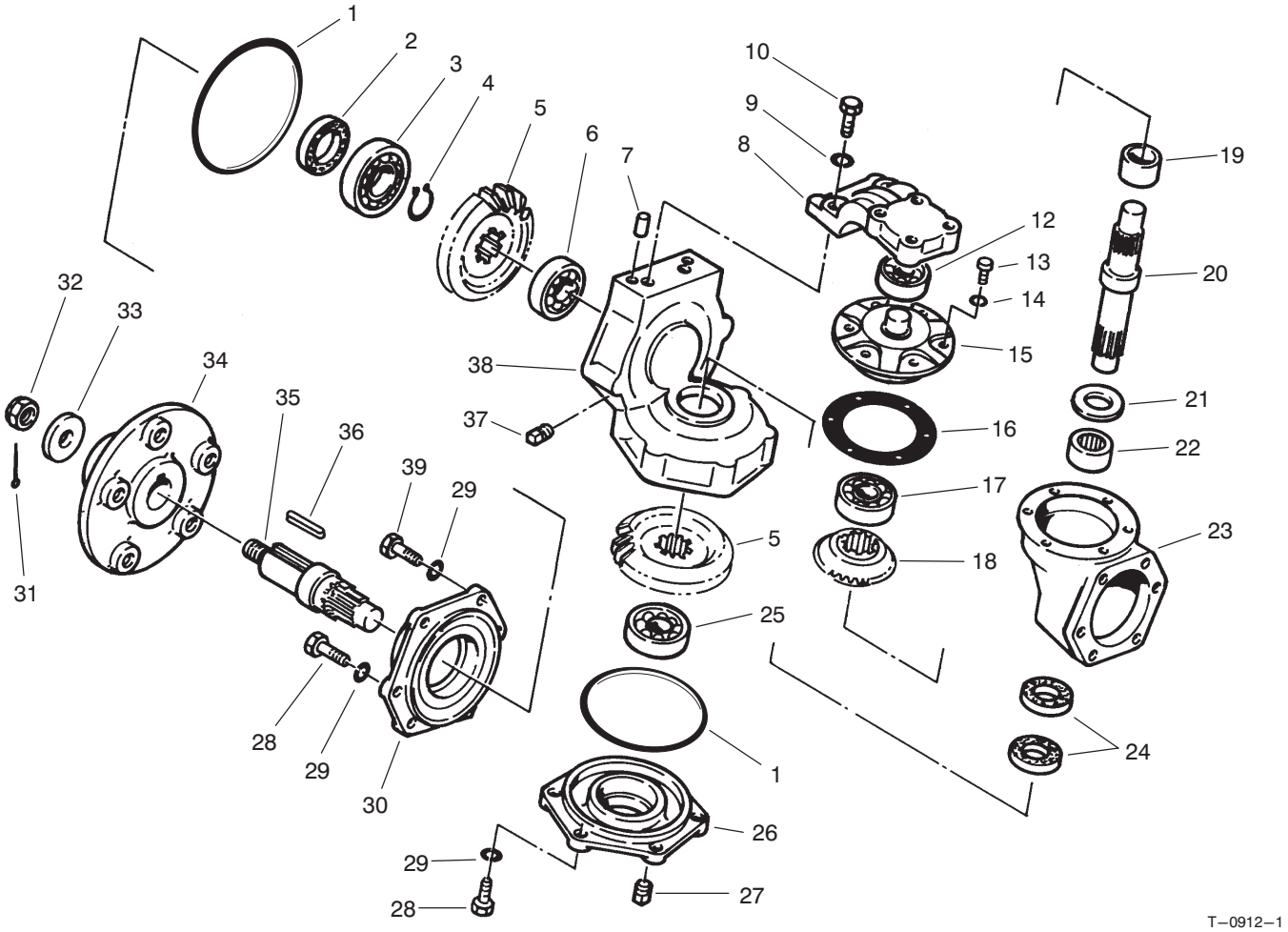

REAR AXLE ASSEMBLY NO. 68–6823 (Continued)

Ref. No.	Part No.	Description	No. Used
1	93–3670	O–Ring	4
2	72–5740	Seal–Oil	2
3	251–348	Bearing–Ball	2
4	72–5720	Ring–Retaining	2
5	72–5580	Gear–Bevel	4
6	251–8	Bearing–Ball	2
7	93–3671	Pin–Dowel	4
8	93–3672	Arm–Knuckle	2
9	42–9600	Washer–Lock	28
10	48–9470	Screw–HH	4
12	251–347	Bearing–Ball	2
13	72–5790	Screw–HH	12
14	43–5930	Washer–Lock	12
15	72–5590	Retainer–Bearing	2
16	72–5630	Gasket	2
17	251–349	Bearing–Ball	2
18	72–5090	Gear–Bevel	2
19	72–5680	Spacer	2
20	72–5560	Pin–King, Knuckle	2

Ref. No.	Part No.	Description	No. Used
21	93–3668	Washer–Thrust	2
22	93–3669	Bearing–Needle	2
23	93–3666	Gear Box–Axle	2
24	72–5730	Seal–Oil	4
25	251–263	Bearing–Ball	2
26	72–5550	Cover	2
27	281–10	Plug–Socket, Hex.	2
28	48–9460	Screw–HH	20
29	42–9850	Washer–Lock	28
30	72–5540	Case–Knuckle	2
31	3272–17	Pin–Cotter	2
32	72–5770	Nut–Castle	2
33	72–5660	Washer–Shaft, Wheel	2
34	72–5650	Hub–Wheel	2
35	72–5570	Shaft–Axle, Outer	2
36	72–5780	Key	2
37	281–7	Plug–Pipe, Square Hd.	2
38	93–3667	Case–Knuckle	2
39	48–7710	Screw–HH	4

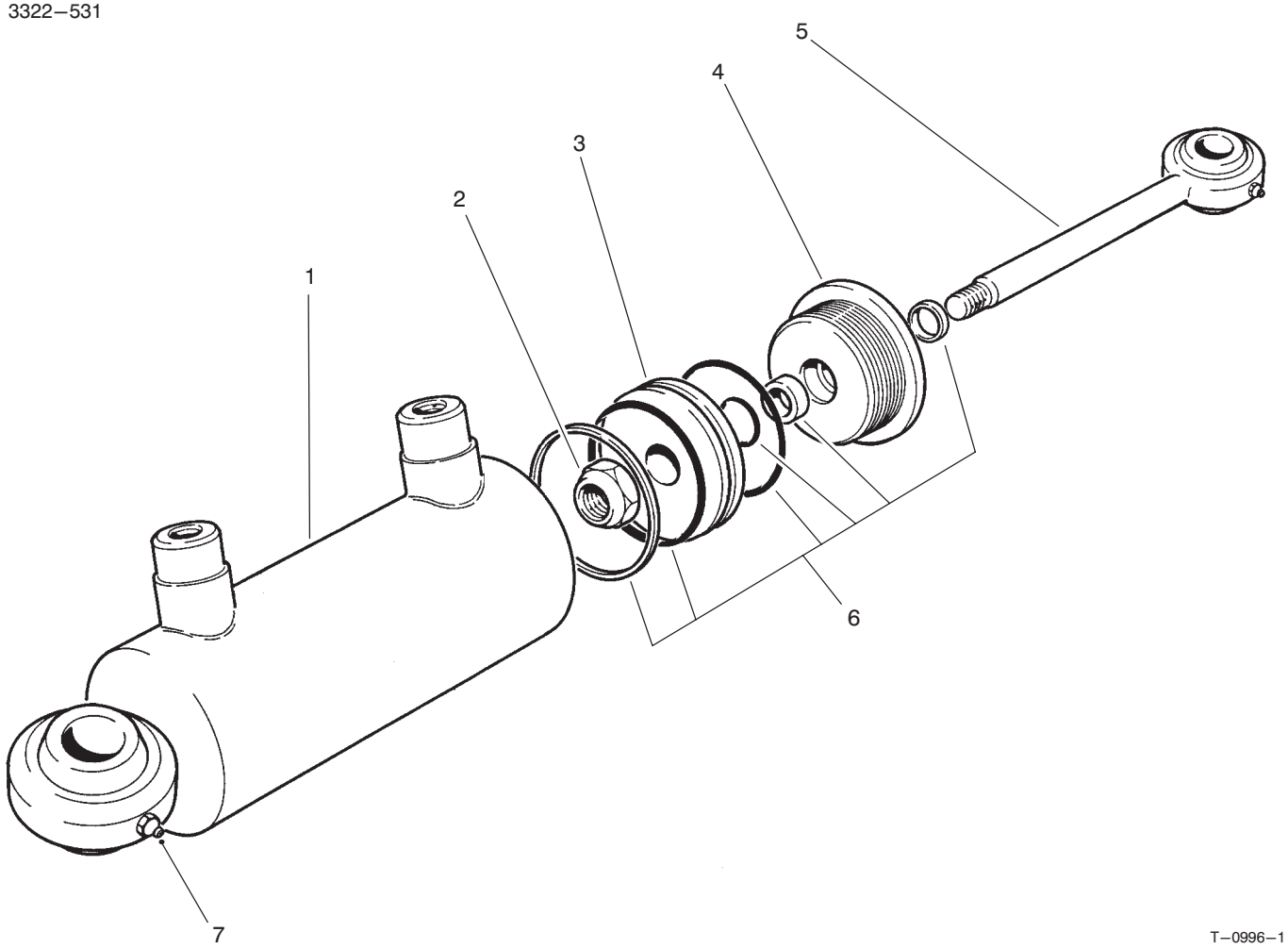

HYDRAULIC CYLINDER NO. 83–5030

Ref. No.	Part No.	Description	No. Used
†1		Asm–Barrel	1
2	75–1210	Nut–Lock	1
3	75–1220	Piston	1
4	75–1260	Head–Internal	1

Ref. No.	Part No.	Description	No. Used
5	83–5380	Asm–Piston Rod	1
6	75–1250	Seal Kit	1
7	302–5	Fitting–Grease	2

†Not Serviced Separately

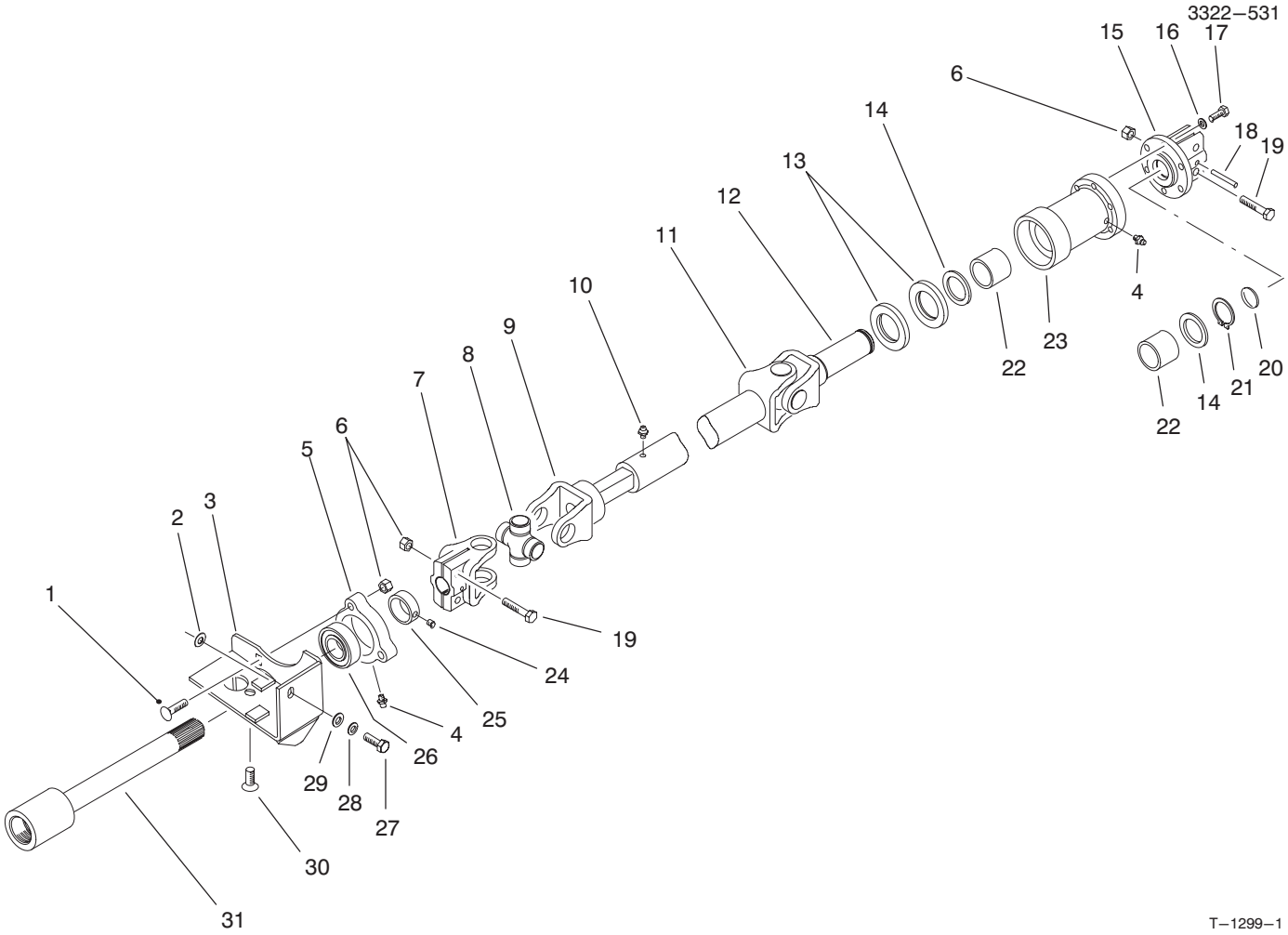

DRIVE SHAFT ASSEMBLY

Ref. No.	Part No.	Description	No. Used
1	3230–3	Bolt–Carriage	3
2	83–7470	Shim	2
3	83–4970	Bracket–Bearing	1
4	302–5	Fitting–Grease	2
5	76–2460	Asm–Bearing (Incl. Ref. #4 & 24–26)	1
6	3296–29	Nut–Lock	7
7	54–9090	Yoke–End	1
8	54–9180	Kit–Universal Joint	2
9	72–3420	Shaft–Slip Yoke	1
10	302–58	Fitting–Grease	1
11	83–5260	Tube–Slip Yoke	1
12	72–3440	Yoke–Shaft	1
13	253–155	Seal	2
14	71–4590	Washer–Thrust	2
15	76–4690	Asm–Axle Coupling (Incl. Ref. #6 & 19)	1
16	3253–3	Washer–Lock	6

Ref. No.	Part No.	Description	No. Used
17	3274–8	Screw–HH	6
18	32121–34	Pin–Roll	1
19	322–8	Screw–HH	4
20	284–3	Plug–Welch	1
21	32151–87	Ring–Retaining	1
22	71–4580	Clutch–Roller	2
23	71–4570	Housing–Clutch	1
24	3245–35	Screw–Set	1
25	251–77	Collar–Locking	1
26	251–337	Bearing–Ball	1
27	48–9460	Screw–HH	1
28	42–9850	Washer–Lock	1
29	48–8030	Washer–Flat	1
30	3274–34	Screw–Socket Flat Hd.	1
31	83–4900	Shaft–Traction	1
*	83–5190	Asm–Drive Shaft (Incl. Ref. #7–12)	1

*Not Illustrated

3322–531

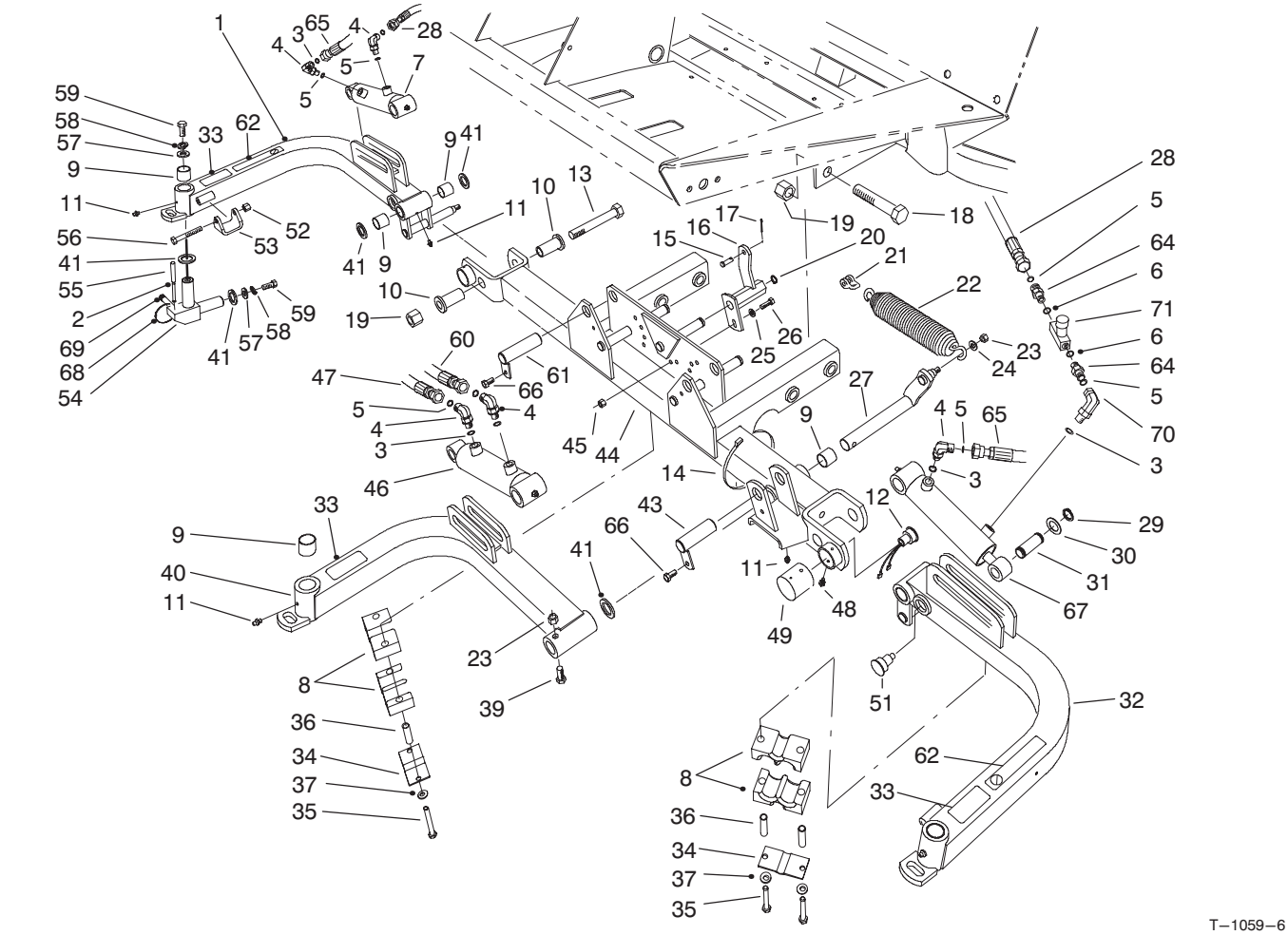

FRONT LIFT ARMS ASSEMBLY

Ref. No.	Part No.	Description	No. Used
1	94–5598	Asm–Lift Arm RH (Incl. Ref. #9 & 11)	1
2	32121–27	Pin–Roll	3
3	237–78	O–Ring	6
4	340–132	Fitting–Hydraulic 90° (Incl. Ref. #3 & 5)	5
5	237–21	O–Ring	8
6	237–42	O–Ring	2
7	98–8069	Asm–Hydraulic Cylinder	1
8	82–8170	Clamp–Hose	8
9	67–1750	Bushing–Sleeve	12
10	84–8320	Insert–Hinge	4
11	302–5	Fitting–Grease	6
12	92–8002	Sensor–Reed Switch	1
13	328–12	Screw–HH	2
14	3290–379	Tie–Cable	3
15	283–6	Pin–Clevis	3
16	75–5210	Bracket–Spring Center	1
*	75–5200	Bracket–Spring RH	1
*	75–5220	Bracket–Spring LH	1
17	3272–10	Pin–Cotter	3
18	328–7	Screw–HH	4
19	3296–51	Nut–Lock	6
20	32151–48	Ring–Retaining	3

Ref. No.	Part No.	Description	No. Used
21	282–4	Clevis–Spring	3
22	5–0743	Spring–Extension	3
23	3296–44	Nut–Lock	4
24	3256–24	Washer–Flat	3
25	3256–23	Washer–Flat	3
26	322–5	Screw–HH	3
27	75–4550	Shaft–Center Arm Pivot	1
28	75–5890	Hose–Hydraulic	2
29	32120–93	Ring–Retaining	6
30	3–6498	Washer–Thrust	6
31	75–5350	Pin–Cylinder Rod End	3
32	94–5800	Asm–Lift Arm LH (Incl. Ref. #9 & 11)	1
33	93–6696	Decal–Warning	3
34	93–7961	Clamp–Rubber	3
35	322–13	Screw–HH	6
36	93–7960	Spacer	6
37	3256–70	Washer–Flat	6
39	323–11	Screw–HH	1
40	94–5802	Asm–Lift Arm, Center (Incl. Ref. #9 & 11)	1
41	256–115	Washer–Thrust	11
43	83–6790	Pin–Cylinder (Short)	1

*Not Illustrated

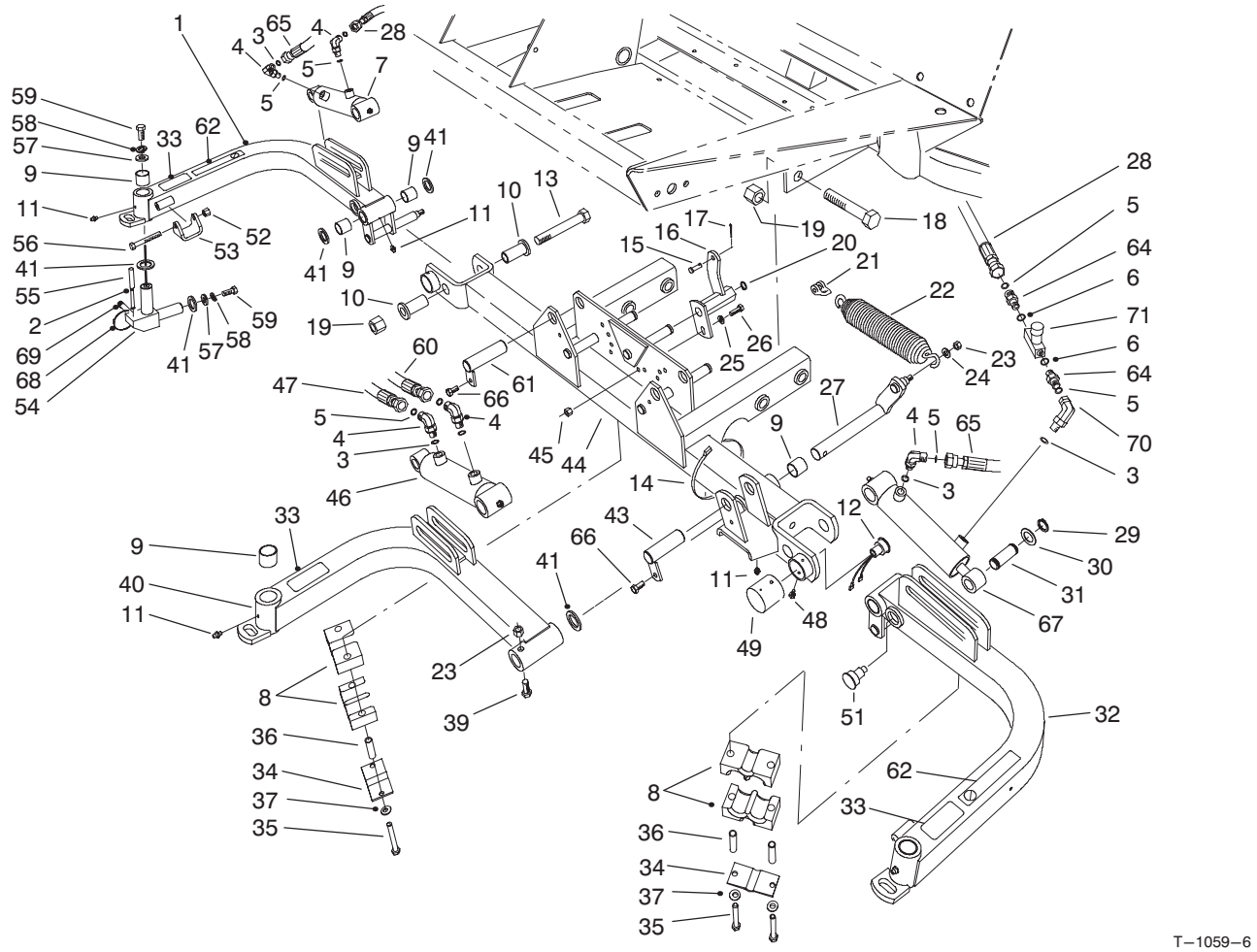

FRONT LIFT ARMS ASSEMBLY (Continued)

Ref. No.	Part No.	Description	No. Used
44	94–5808	Asm–Carrier Frame (Incl. Ref. #9 & 11)	1
45	3296–29	Nut–Lock	3
46	93–9310	Asm–Hydraulic Cylinder	1
47	75–5900	Hose–Hydraulic	1
48	32104–76	Screw–Thread Forming	2
49	75–6370	Cover–Sensor	1
51	92–8754	Actuator–Reed Switch	1
52	3296–39	Nut–Lock	2
53	75–5410	Bracket–Arm	2
54	75–3010	Joint–Arm	3
55	32121–122	Pin–Roll	3
56	323–12	Screw–HH	2
57	3256–6	Washer–Flat	6
58	3253–7	Washer–Lock	6
59	325–4	Screw–HH	6

Ref. No.	Part No.	Description	No. Used
60	75–5910	Hose–Hydraulic	1
61	83–6780	Pin–Cylinder (Long)	2
62	93–6687	Decal–No Step	2
64	340–1	Fitting–Straight (Incl. Ref. #5 & 6)	2
65	82–6490	Hose–Hydraulic	1
66	32144–14	Screw–Self Tapping	3
67	98–8068	Asm–Hydraulic Cylinder	1
68	3290–378	Tie–Cable	5
69	92–9097	Set Screw	3
70	340–143	Fitting–Hydraulic 90° (Incl. Ref. #3)	1
71	98–9742	Valve–Flow Control	1
*	93–6688	Decal–Hands/Feet (Mounted on Cutting Unit Frames)	3

* Not Illustrated

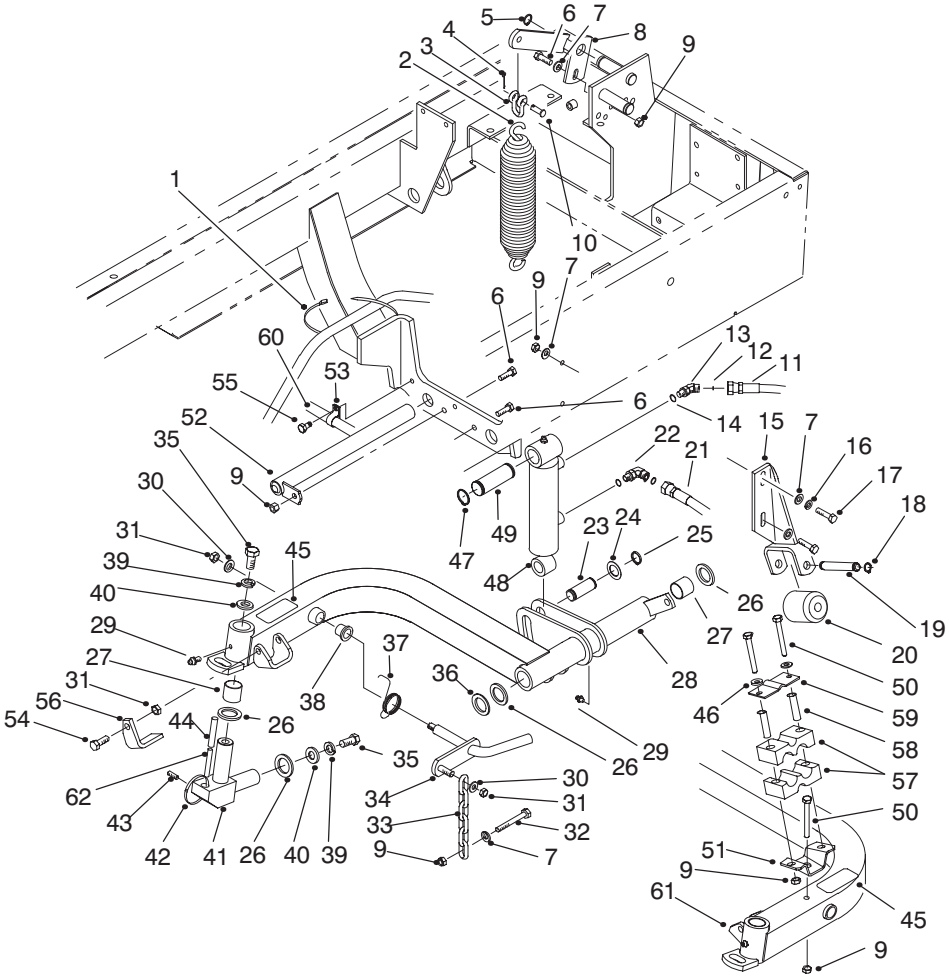

REAR LIFT ARMS ASSEMBLY

Ref. No.	Part No.	Description	No. Used
1	3290–379	Tie–Cable	4
2	5–0743	Spring–Counterbalance	2
3	282–4	Clevis–Spring	2
4	3272–10	Pin–Cotter	2
5	32151–48	Ring–Retaining	2
6	322–5	Screw–HH	3
7	3256–23	Washer–Flat	10
8	98–4548	Bracket–Spring Rear RH	1
*	98–4536	Bracket–Spring Rear LH	1
9	3296–29	Nut–Lock	11
10	283–6	Pin–Clevis	2
11	75–6070	Hose–Hydraulic (Cap)	1
12	237–78	O–Ring	4
13	340–103	Fitting–Hydraulic 45° (Incl. Ref. #12 & 14)	1
14	237–21	O–Ring	4
15	75–3810	Bracket–Roller	2
16	3253–4	Washer–Lock	2
17	322–6	Screw–HH	4
18	32151–61	Ring–Retaining	4
19	75–5400	Shaft–Roller	2
20	75–5390	Roller	2
21	75–6180	Hose–Hydraulic RH (Rod)	2
*	75–6080	Hose–Hydraulic LH (Rod)	1
22	340–132	Fitting–Hydraulic 90° (Incl. Ref. #12 & 14)	3

Ref. No.	Part No.	Description	No. Used
23	75–5350	Pin–Cylinder Rod End	2
24	3–6498	Washer–Thrust	4
25	32120–93	Ring–Retaining	4
26	256–115	Washer–Thrust	8
27	67–1750	Bushing–Sleeve	8
28	94–5596	Asm–Lift Arm, Rear RH (Incl. Ref. #27, 29 & 38)	1
29	302–5	Fitting–Grease	4
30	3256–24	Washer–Flat	4
31	3296–39	Nut–Lock	6
32	322–12	Screw–HH	2
33	5–1096	Chain–Cutting Unit	2
34	75–4590	Rod–Pivot	2
35	325–4	Screw–HH	4
36	93–0142	Bushing–Straight	2
37	75–4520	Spring–Torsion RH	1
*	75–4530	Spring–Torsion LH	1
38	256–287	Bushing–Flange	4
39	3253–7	Washer–Lock	4
40	3256–6	Washer–Flat	4
41	75–3010	Joint–Arm	2
42	3290–378	Tie–Cable	2
43	92–9097	Set Screw	2
44	32121–122	Pin–Roll	2
45	93–6696	Decal–Warning	2

*Not Illustrated

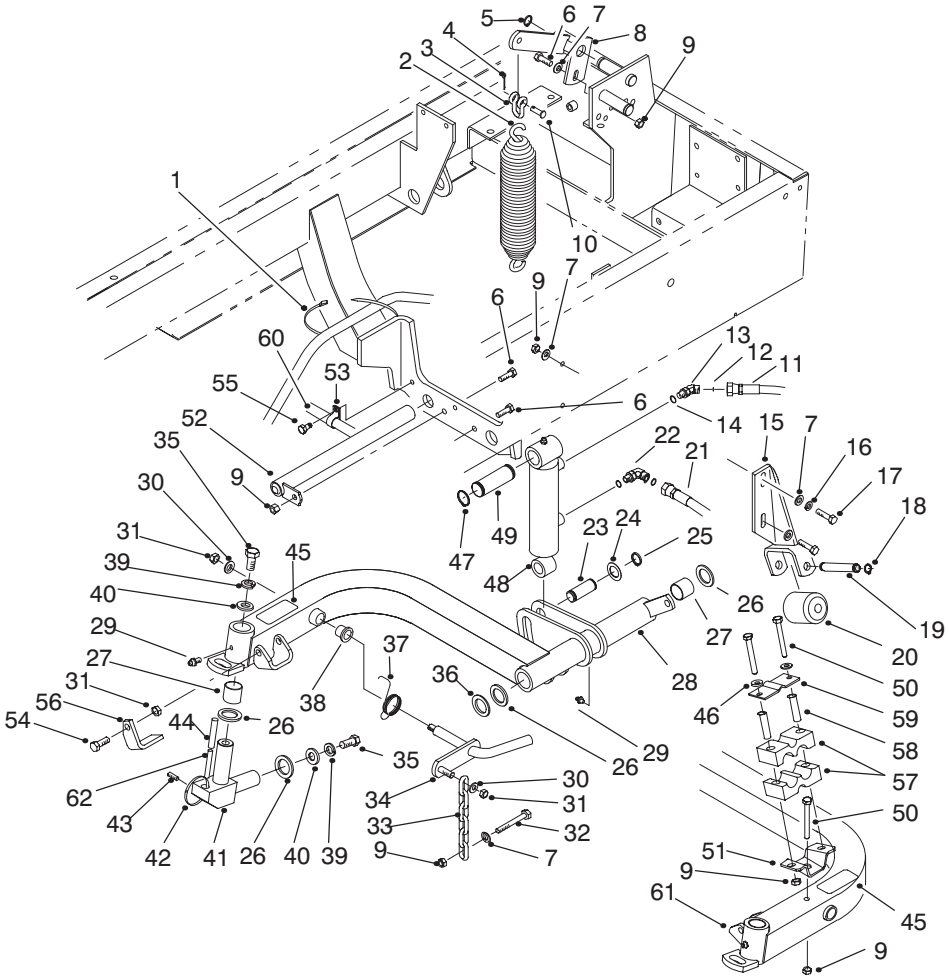

REAR LIFT ARMS ASSEMBLY (Continued)

Ref. No.	Part No.	Description	No. Used
46	3256–70	Washer–Plain	2
47	32151–36	Ring–Retaining	4
48	93–9311	Asm–Hydraulic Cylinder	2
49	75–5360	Pin–Cylinder Cap End	2
50	322–13	Screw–HH	3
51	94–4919	Bracket–Clamp, Hose	1
52	93–0069	Pin–Pivot	2
54	323–6	Screw–HH	2
56	93–3640	Stop–Reel RH	1
*	83–5170	Stop–Reel LH	1

Ref. No.	Part No.	Description	No. Used
57	82–8170	Clamp	2
58	93–7960	Spacer	2
59	93–7961	Clamp	1
61	94–5594	Asm–Lift Arm, Rear LH (Incl. Ref. #27, 29 & 38)	1
62	32121–27	Pin–Roll	2
*	93–6688	Decal–Hands/Feet (Mounted on Cutting Unit Frames)	2

*Not Illustrated

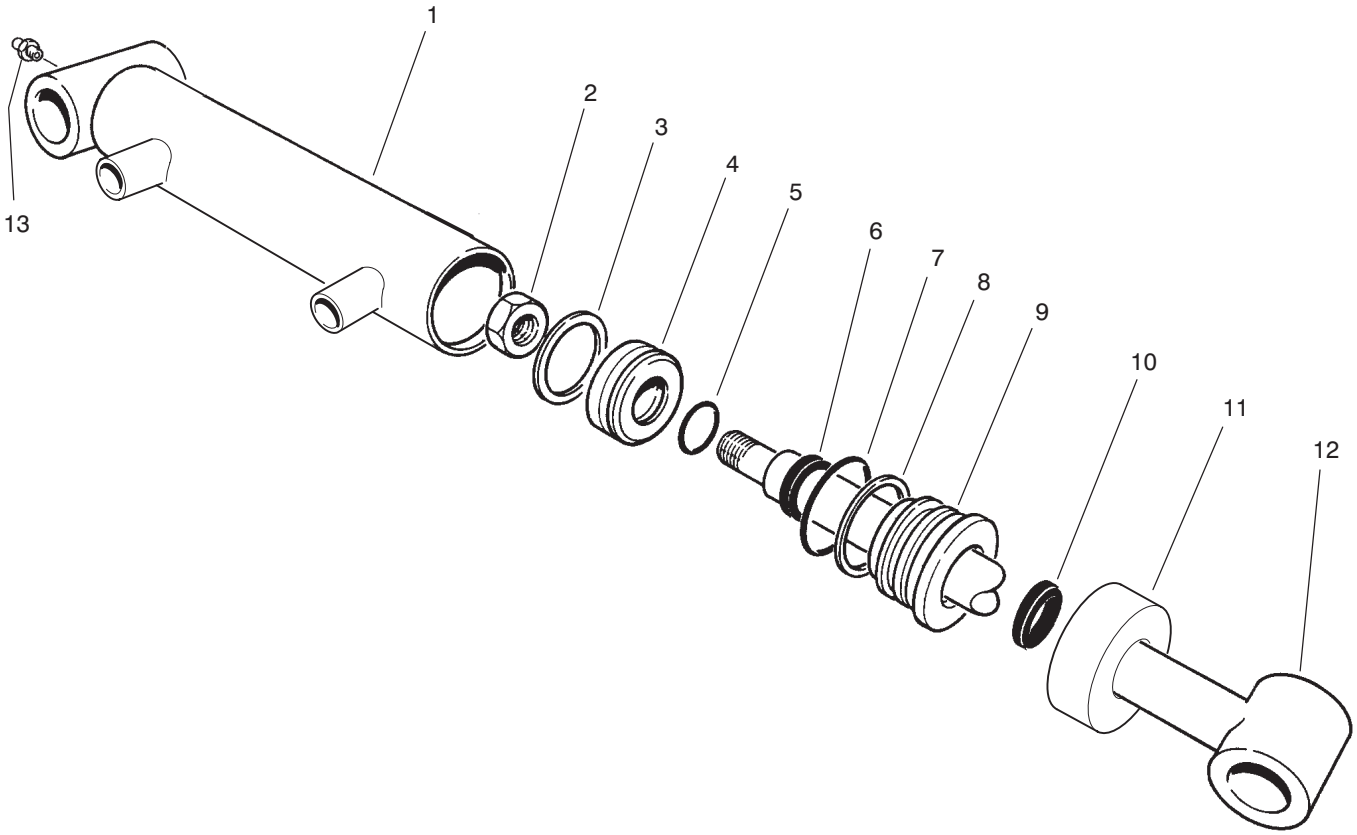

T–2114–2

HYDRAULIC CYLINDER NO. 93–9311

Ref. No.	Part No.	Description	No. Used
†1	93–9313	Asm–Barrel	1
2	32152–10	Nut	1
†3		Uni–ring	1
4	70–2780	Piston	1
†5		O–Ring	1
†6		Seal–Rod	1
†7		O–Ring	1
†8		Backup	1

Ref. No.	Part No.	Description	No. Used
9	93–7990	Head	1
†10		Seal–Dust	1
11	93–7991	Collar	1
12	75–3790	Shaft and Tube	1
13	302–5	Fitting–Grease	1
*	86–7330	Kit–Seal Repair Kit (Incl. Ref. #3, 5–8 & 10)	1

*Not Illustrated
†Not Serviced Separately

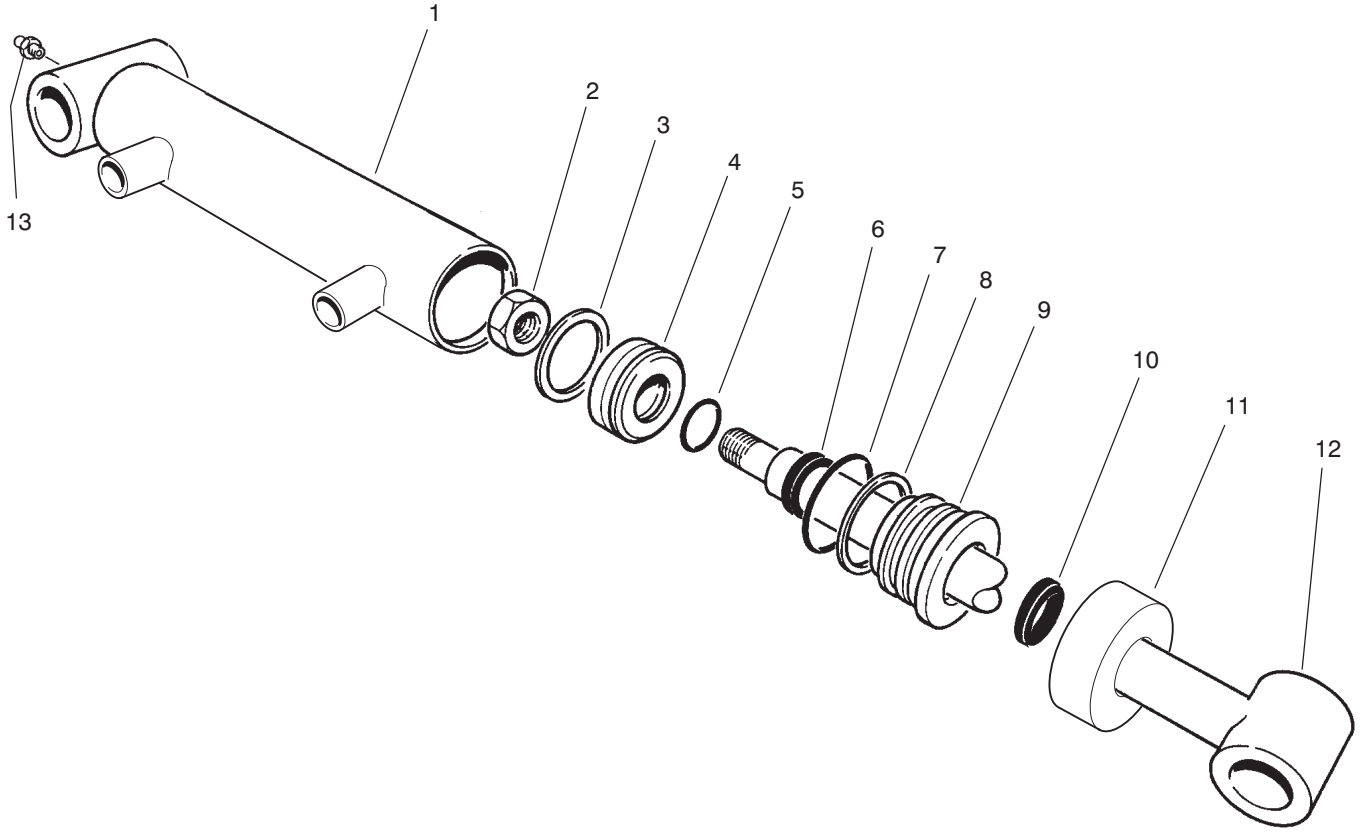

T–2114–2

HYDRAULIC CYLINDER NO. 93–9310

Ref. No.	Part No.	Description	No. Used
1	93–9312	Asm–Barrel	1
2	32152–10	Nut	1
†3		Uni–ring	1
4	70–2780	Piston	1
†5		O–Ring	1
†6		Seal–Rod	1
†7		O–Ring	1
†8		Backup	1

Ref. No.	Part No.	Description	No. Used
9	93–7990	Head	1
†10		Seal–Dust	1
11	93–7991	Collar	1
12	75–3790	Shaft and Tube	1
13	302–5	Fitting–Grease	1
*	86–7330	Kit–Seal Repair (Incl. Ref. #3, 5–8 & 10)	1

*Not Illustrated
†Not Serviced Separately

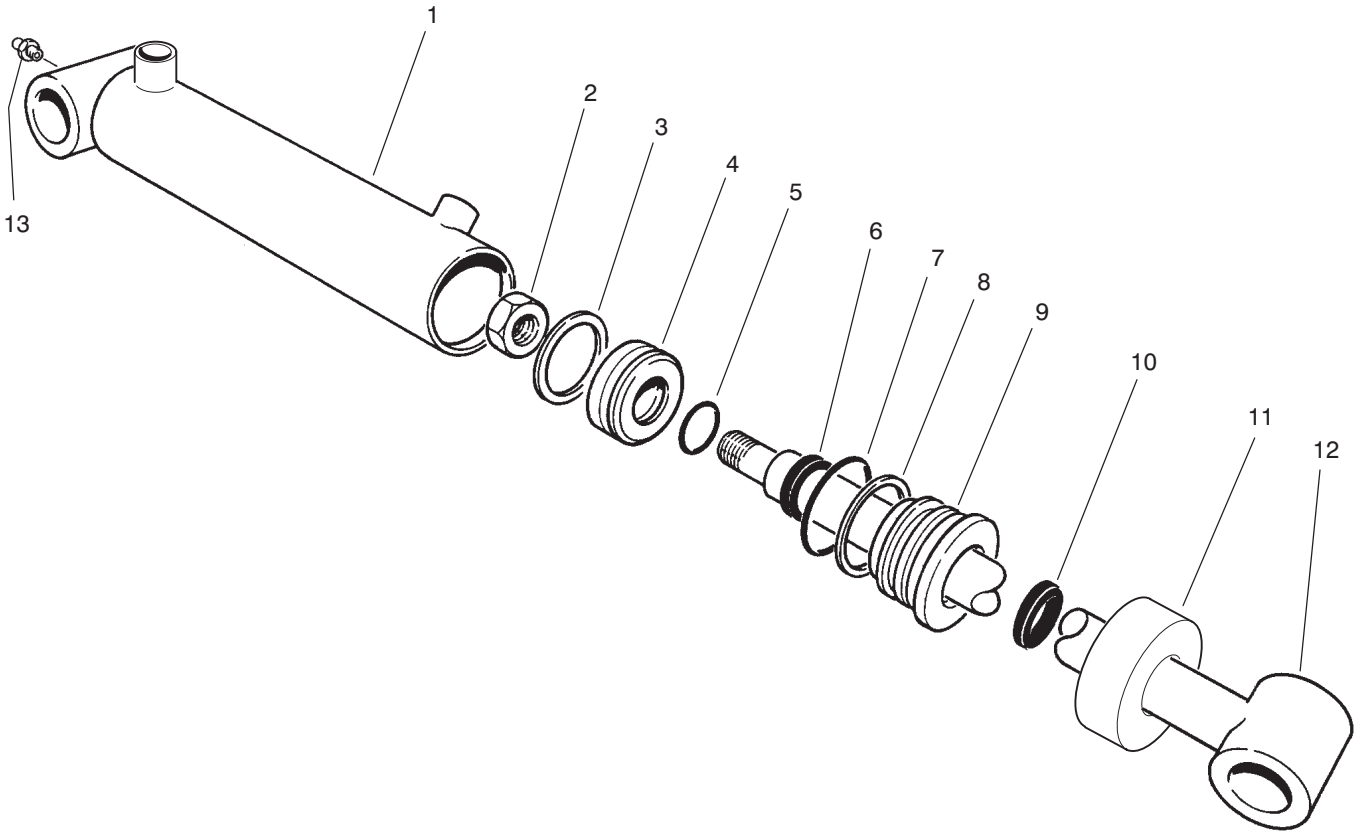

T–2115–1

HYDRAULIC CYLINDER NO. 98–8069

Ref. No.	Part No.	Description	No. Used
1	93–7558	Asm–Barrel	1
2	32152–10	Nut	1
†3		Uni–ring	1
4	84–1710	Piston	1
†5		O–Ring	1
†6		Seal–Rod	1
†7		O–Ring	1
†8		Backup	1

Ref. No.	Part No.	Description	No. Used
9	98–7354	Head	1
†10		Seal–Dust	1
11	93–7994	Collar	1
12	84–1740	Shaft and Tube	1
13	302–5	Fitting–Grease	1
*	84–1760	Kit–Seal Repair (Incl. Ref. #3, 5–8 & 10)	1

*Not Illustrated
†Not Serviced Separately

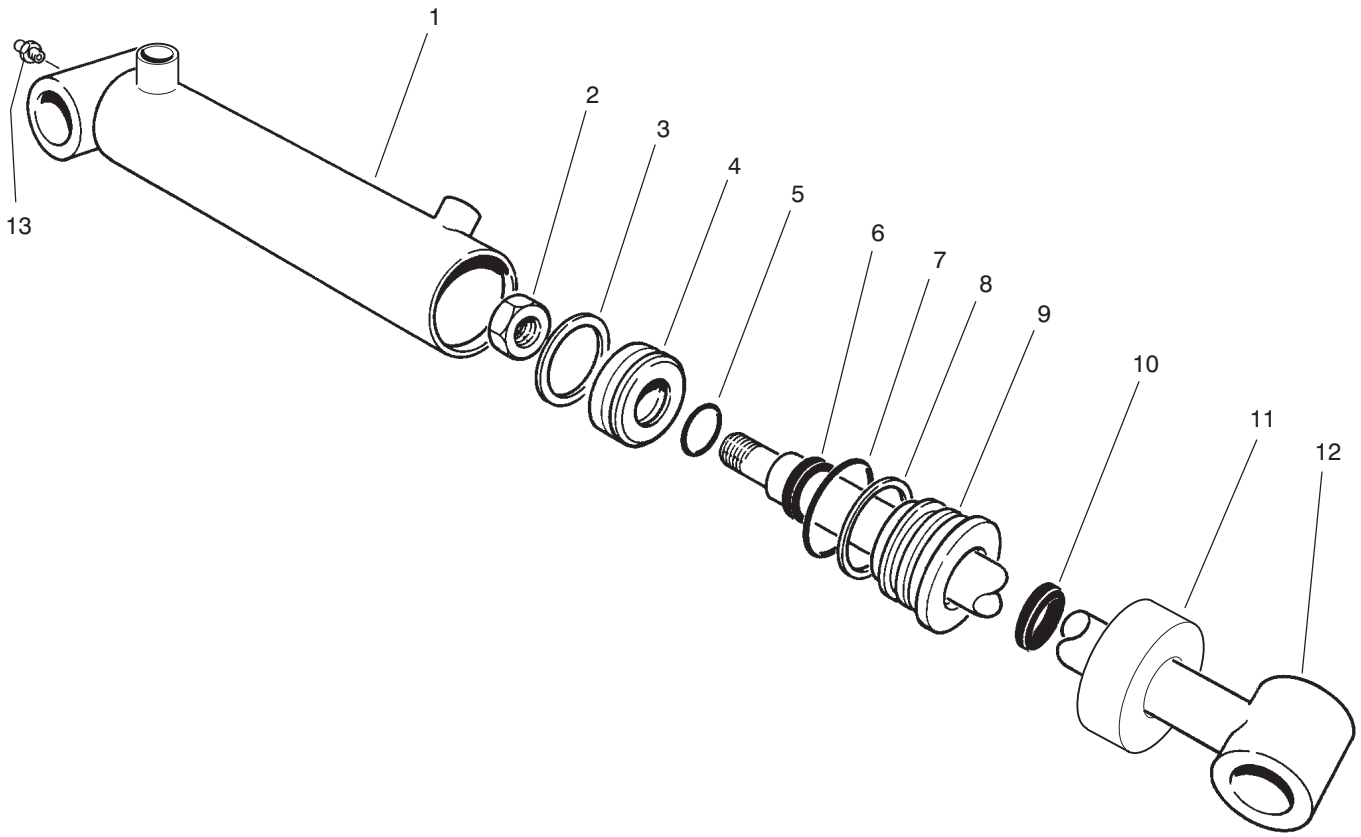

T–2115–1

HYDRAULIC CYLINDER NO. 98–8068

Ref. No.	Part No.	Description	No. Used
1	93–7557	Asm–Barrel	1
2	32152–10	Nut	1
†3		Uni–ring	1
4	70–2780	Piston	1
†5		O–Ring	1
†6		Seal–Rod	1
†7		O–Ring	1
†8		Backup	1

Ref. No.	Part No.	Description	No. Used
9	98–7353	Head	1
†10		Seal–Dust	1
11	93–7991	Collar	1
12	75–2120	Shaft and Tube	1
13	302–5	Fitting–Grease	1
*	86–7330	Kit–Seal Repair (Incl. Ref. #3, 5–8 & 10)	1

*Not Illustrated
†Not Serviced Separately

3322−531

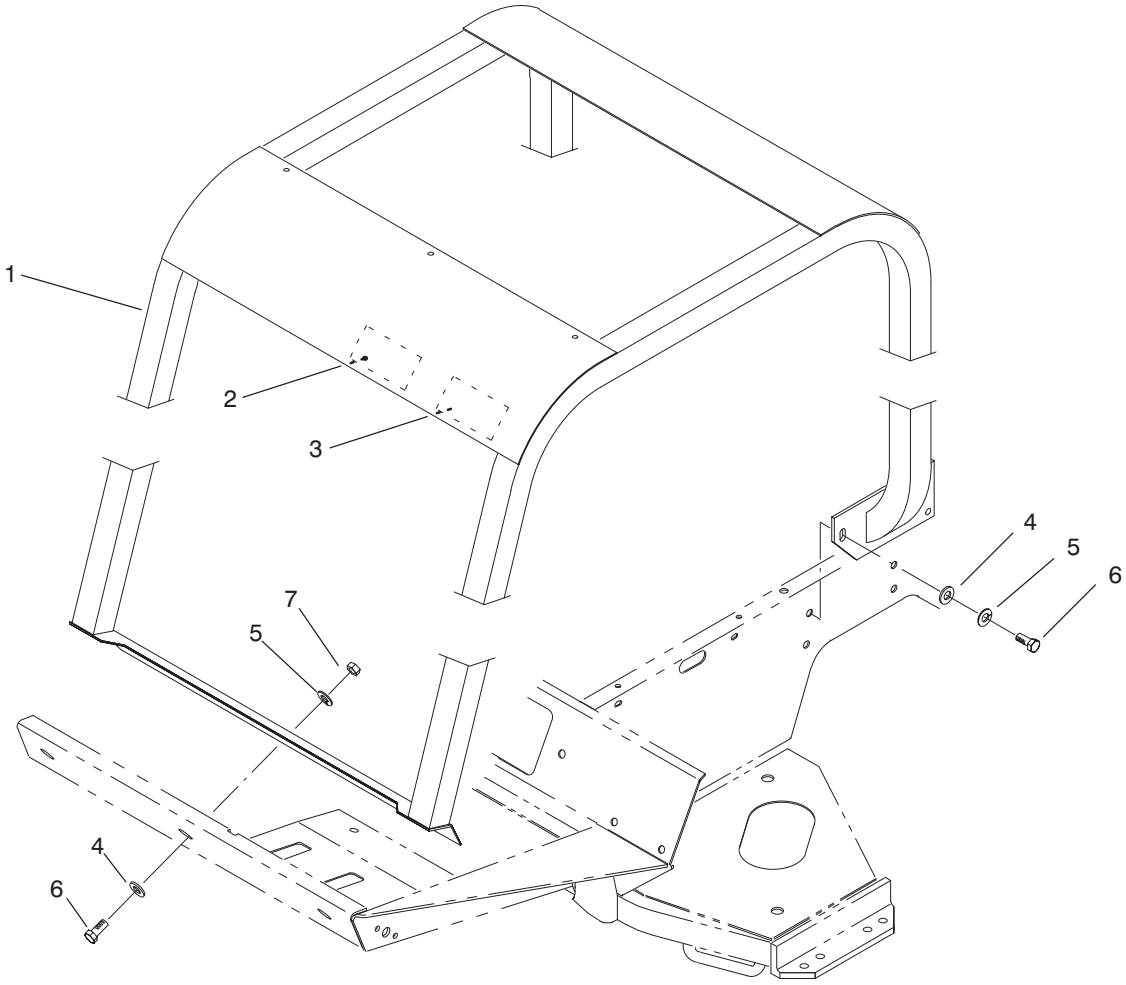

T−1959−1

ROLL OVER PROTECTION SYSTEM (R.O.P.S.) (Optional)

Ref. No.	Part No.	Description	No. Used
1	83−7410	Roll−Bar	1
2	85−9980	Decal−R.O.P.S.	1
2	93−8073	Decal−R.O.P.S. (Europe)	1
3	83−7430	Decal−Danger	1
3	93−8050	Decal−Danger (Europe)	1
3	84−4300	Decal−Danger (Japan)	1
4	3256−26	Washer−Flat	9

Ref. No.	Part No.	Description	No. Used
5	3253−7	Washer−Lock	9
6	325−5	Screw−HH	9
7	3217−9	Nut−Lock	3
*	21−4191	Asm−Seat Belt	1
*	3212−4	Screw−HH	2
*	3253−6	Washer−Lock	2

*Not Illustrated

SPECIAL TOOLS

AXLE TOOL NO. *TOR859920

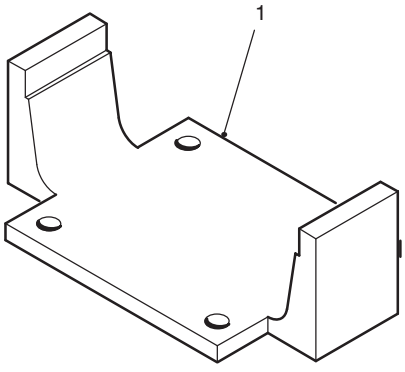

T–1325–1

Ref. No.	Part No.	Description	No. Used
1		Tool–Axle	1

*Obtain these items directly from OTC 2013 4th St. Owatonna, MN. 55060 1–800–533–0492 (in Minnesota and Canada 1–507–455–7050) Fax. 507–455–7011.

TABLE OF CONTENTS

Description	Page
Frame & Body Assembly	1–2
Hood Switch & Lock Assembly	3
Steering Tower Assembly	4
Steering Valve Assembly No. 75–0600	5
Traction & Brake Pedals Assembly	6
Seat & Throttle Assembly	7
Seat Suspension Assembly	8
Diagnostic–ACE Display Assembly	9
Electrical Schematic	10
Control Console Assembly	11–12
Hydraulic Schematic	13
Hydraulic Reservoir Assembly	14–15
Hydraulic Control Manifold Assembly	16
Control Manifold Assembly	17
Front Hydraulic Manifolds	18
Rear Hydraulic Manifolds	19
Cutting Unit Hydraulic Components	20
Reel Motor Assembly No. 93–1375	21
Fuel Tank Assembly	22
Fuel Filter Assembly	23
Front Axle & Transmission Assembly	24–25
Front Axle Assembly No. 94–6933	26–27
Brake Assembly	28
Transmission Assembly No. 75–0012	29
Traction Control Assembly	30
Gear Pump Installation Assembly	31
Hydraulic Pump Assembly No. 98–9796	32
Radiator Assembly	33–34
Muffler & Pump Drive Assembly	35
Engine Installation Assembly	36–37
Crankcase Assembly	38
Oil Pan Assembly	39
Cylinder Head Assembly	40
Gear Case Assembly	41
Filter, Oil Cooler & Pipe Assembly	42
Head Cover Assembly	43
Dipstick Assembly	44
Main Bearing Case Assembly	45
Cam Shaft Assembly	46
Piston & Crankshaft Assembly	47
Flywheel Assembly	48
Fuel Camshaft Assembly	49
Engine Stop Lever Assembly	50
Stop Solenoid & Fuel Pump Assembly	51
Injection Pump Assembly	52
Injection Pump Assembly (Continued)	53
Governor Assembly	54
Speed Control Plate Assembly	55
Nozzle Holder & Glow Plug Assembly	56
Nozzle Holder Assembly	57
Alternator & Pulley Assembly	58
Alternator Assembly	59
Starter Mount Assembly	60
Starter Assembly	61
Water Flange & Thermostat Assembly	62
Water Pump Assembly	63
Valve & Rocker Arm Assembly	64
Exhaust Manifold & Gasket Assembly	65
Turbo Charger Assembly	66
Engine Components Assembly	67
Air Cleaner Assembly	68
Filter, Water/Fuel Separator	69
Rear Axle Installation Assembly	70
Rear Axle Assembly No. 68–6823	71–73
Hydraulic Cylinder No. 83–5030	74
Drive Shaft Assembly	75
Front Lift Arms Assembly	76–77
Rear Lift Arms Assembly	78–79
Hydraulic Cylinder Assembly No. 93–9311	80
Hydraulic Cylinder Assembly No. 93–9310	81
Hydraulic Cylinder Assembly No. 98–8069	82
Hydraulic Cylinder Assembly No. 98–8068	83
Roll Over Protection System (R.O.P.S.) Assembly.	84
Special Tools	85

IDENTIFICATION AND ORDERING

MODEL AND SERIAL NUMBERS

The Reelmaster® 5400D has two identification numbers; a model number and a serial number. The two numbers are stamped on a decal which is located on the traction unit frame under the seat. In any correspondence concerning the Reelmaster 5400D, supply model and serial numbers to assure that correct information and replacement parts are obtained.

To order replacement parts from an Authorized TORO Service Dealer, supply the following information:

1. Model and serial number of the Reelmaster 5400D.
2. Part number, description, and the quantity of part(s) desired.

NOTE: Do not order by reference number if a parts catalog is being used; use the PART NUMBER.

COUNTRIES OTHER THAN THE UNITED STATES OR CANADA

Customers who have purchased TORO products exported from the United States or Canada should contact their Toro Distributor (Dealer) to obtain guarantee policies for your country, province or state.

MAINTENANCE RECORD

Date								

MAINTENANCE RECORD

Date								