Form No. 3428-163 Rev A

TORO®

Count on it.

Operator's Manual

# Reelmaster® 5610-D Traction Unit

**Model No. 03679—Serial No. 403410001 and Up**

Register at www.Toro.com.
Original Instructions (EN)

CE

*3428-163* A

This product complies with all relevant European directives. For details, please see the separate product specific Declaration of Conformity (DOC) sheet.

It is a violation of California Public Resource Code Section 4442 or 4443 to use or operate the engine on any forest-covered, brush-covered, or grass-covered land unless the engine is equipped with a spark arrester, as defined in Section 4442, maintained in effective working order or the engine is constructed, equipped, and maintained for the prevention of fire.

The enclosed engine owner's manual is supplied for information regarding the US Environmental Protection Agency (EPA) and the California Emission Control Regulation of emission systems, maintenance, and warranty. Replacements may be ordered through the engine manufacturer.

**⚠ WARNING**

**CALIFORNIA**
**Proposition 65 Warning**

**Diesel engine exhaust and some of its constituents are known to the State of California to cause cancer, birth defects, and other reproductive harm.**

**Battery posts, terminals, and related accessories contain lead and lead compounds, chemicals known to the State of California to cause cancer and reproductive harm. Wash hands after handling.**

**Use of this product may cause exposure to chemicals known to the State of California to cause cancer, birth defects, or other reproductive harm.**

# Introduction

This machine is a ride-on, reel-blade lawn mower intended to be used by professional, hired operators in commercial applications. It is primarily designed for cutting grass on well-maintained turf. Using this product for purposes other than its intended use could prove dangerous to you and bystanders.

Read this information carefully to learn how to operate and maintain your product properly and to avoid injury and product damage. You are responsible for operating the product properly and safely.

Visit www.Toro.com for more information, including safety tips, training materials, accessory information, help finding a dealer, or to register your product.

Whenever you need service, genuine Toro parts, or additional information, contact an Authorized Service Dealer or Toro Customer Service and have the model and serial numbers of your product ready. Figure 1 identifies the location of the model and serial numbers on the product. Write the numbers in the space provided.

***Important:*** **With your mobile device, you can scan the QR code on the serial number plate (if equipped) to access warranty, parts, and other product information.**

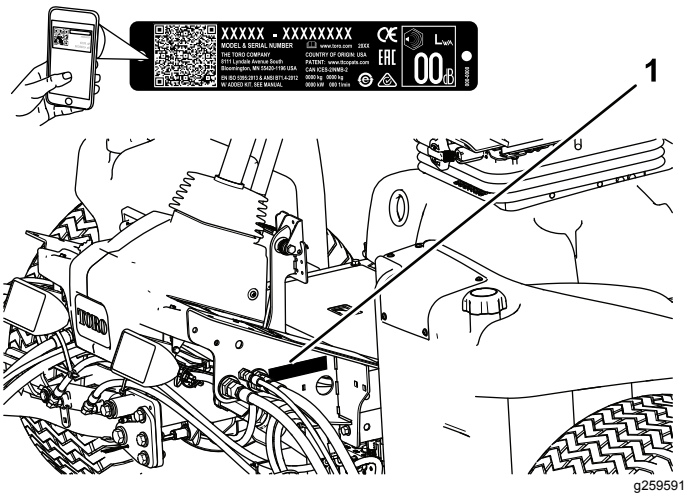


**Figure 1**

1. Model and serial number location

**Model No.** _____

**Serial No.** _____

This manual identifies potential hazards and has safety messages identified by the safety-alert symbol (Figure 2), which signals a hazard that may cause serious injury or death if you do not follow the recommended precautions.



g000502

**Figure 2**
Safety-alert symbol

This manual uses 2 words to highlight information. **Important** calls attention to special mechanical information and **Note** emphasizes general information worthy of special attention.

© 2018—The Toro® Company
8111 Lyndale Avenue South
Bloomington, MN 55420



Contact us at www.Toro.com.
Printed in the USA
All Rights Reserved

# Contents


Safety ..... 4
General Safety ..... 4
Engine Emission Certification ..... 4
Safety and Instructional Decals ..... 5
Setup ..... 9
1 Adjusting the Tire Pressure ..... 9
2 Adjusting the Control-Arm Position ..... 10
3 Installing the Cutting Units ..... 10
4 Adjusting the Turf-Compensation Spring ..... 14
5 Installing the CE Hood Latch ..... 14
6 Using the Cutting-Unit Kickstand ..... 15
7 Applying the CE Decals ..... 15
Product Overview ..... 16
Controls ..... 16
Specifications ..... 24
Attachments/Accessories ..... 24
Before Operation ..... 24
Before Operation Safety ..... 24
Performing Daily Maintenance ..... 25
Filling the Fuel Tank ..... 25
During Operation ..... 26
During Operation Safety ..... 26
Starting the Engine ..... 27
Shutting Off the Engine ..... 27
Cutting Grass with the Machine ..... 27
Diesel Particulate Filter Regeneration ..... 28
Adjusting the Lift-Arm Counterbalance ..... 39
Adjusting the Lift-Arm Turnaround Position ..... 40
Setting the Reel Speed ..... 40
Understanding the Diagnostic Light ..... 42
Checking the Interlock Switches ..... 42
Operating Tips ..... 43
After Operation ..... 43
After Operation Safety ..... 43
Hauling the Machine ..... 43
Identifying the Tie-Down Points ..... 43
Jacking Points ..... 44
Pushing or Towing the Machine ..... 44
Hydraulic-Valve Solenoid Functions ..... 44
Maintenance ..... 46
Maintenance Safety ..... 46
Recommended Maintenance Schedule(s) ..... 46
Daily Maintenance Checklist ..... 48
Lubrication ..... 49
Greasing the Bearings and Bushings ..... 49
Engine Maintenance ..... 50
Engine Safety ..... 50
Servicing the Air Cleaner ..... 50
Servicing the Engine Oil ..... 51
Servicing the Diesel-Oxidation Catalyst (DOC) and the Soot Filter ..... 53
Fuel System Maintenance ..... 53
Servicing the Water Separator ..... 53
Servicing the Engine Fuel Filter ..... 54
Checking the Fuel Lines and Connections ..... 54
Cleaning the Fuel Pick-Up Tube Screen ..... 54
Electrical System Maintenance ..... 55
Electrical System Safety ..... 55
Servicing the Battery ..... 55
Checking the Fuses ..... 55
Drive System Maintenance ..... 56
Checking the Tire Pressure ..... 56
Checking the Torque of the Wheel Nuts ..... 56
Adjusting the Traction Drive for Neutral ..... 56
Adjusting the Rear Wheel Toe-in ..... 57
Cooling System Maintenance ..... 57
Cooling System Safety ..... 57
Checking the Cooling System ..... 57
Removing Debris from the Cooling System ..... 58
Brake Maintenance ..... 59
Adjusting the Parking Brakes ..... 59
Adjusting the Parking-Brake Latch ..... 59
Belt Maintenance ..... 60
Servicing the Alternator Belt ..... 60
Hydraulic System Maintenance ..... 60
Hydraulic System Safety ..... 60
Checking the Hydraulic Lines and Hoses ..... 60
Checking the Hydraulic Fluid ..... 60
Hydraulic Fluid Specifications ..... 61
Hydraulic Fluid Capacity ..... 61
Changing the Hydraulic Fluid ..... 61
Replacing the Hydraulic Filters ..... 62
Using the Hydraulic System Test Ports ..... 63
Cutting-Unit System Maintenance ..... 64
Blade Safety ..... 64
Checking the Reel-to-Bedknife Contact ..... 64
Backlapping the Cutting Units ..... 64
Cleaning ..... 66
Washing the Machine ..... 66
Storage ..... 66
Storage Safety ..... 66
Preparing the Traction Unit ..... 66
Preparing the Engine ..... 66

# Safety

This machine has been designed in accordance with EN ISO 5395 (when you complete the setup procedures) and ANSI B71.4-2017.

# General Safety

This product is capable of amputating hands and feet and of throwing objects.

- Read and understand the contents of this *Operator's Manual* before starting the engine.
- Use your full attention while operating the machine. Do not engage in any activity that causes distractions; otherwise, injury or property damage may occur.
- Do not put your hands or feet near moving components of the machine.
- Do not operate the machine without all guards and other safety protective devices in place and functioning properly on the machine.
- Keep bystanders and children out of the operating area. Never allow children to operate the machine.
- Shut off the engine, remove the key, and wait for all movement to stop before you leave the operator's position. Allow the machine to cool before adjusting, servicing, cleaning, or storing it.

Improperly using or maintaining this machine can result in injury. To reduce the potential for injury, comply with these safety instructions and always pay attention to the safety-alert symbol ⚠, which means Caution, Warning, or Danger—personal safety instruction. Failure to comply with these instructions may result in personal injury or death.

# Engine Emission Certification

The engine in this machine is EPA Tier 4 Final and stage 3b compliant.

# Safety and Instructional Decals

Safety decals and instructions are easily visible to the operator and are located near any area of potential danger. Replace any decal that is damaged or missing.

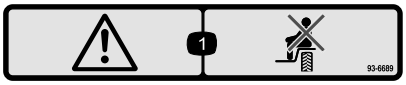


decal93-6689

**93-6689**

1. Warning—do not carry passengers.

---

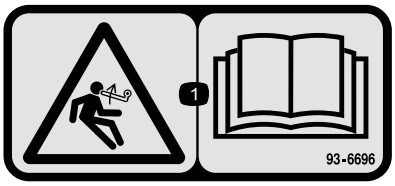


decal93-6696

**93–6696**

1. Stored energy hazard—read the *Operator's Manual*.

---

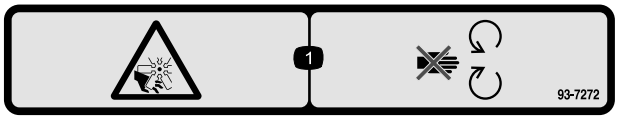


decal93-7272

**93-7272**

1. Cutting/dismemberment hazard; fan—stay away from moving parts.

---

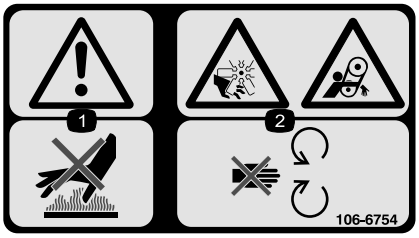


decal106-6754

**106-6754**

1. Warning—do not touch the hot surface.
2. Cutting/dismemberment hazard, fan; entanglement hazard, belt—stay away from moving parts.

---




decal106-6755

**106-6755**

1. Engine coolant under pressure.
2. Explosion hazard—read the *Operator's Manual*.
3. Warning—do not touch the hot surface.
4. Warning—read the *Operator's Manual*.

---

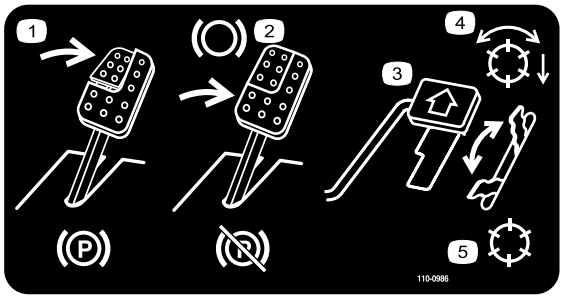


decal110-0986

**110-0986**

1. Press the brake pedal and parking brake pedal to set the parking brake.
2. Press the brake pedal to apply the brake.
3. Press the traction pedal to move the machine forward.
4. Reel enabled mode
5. Transport mode

---

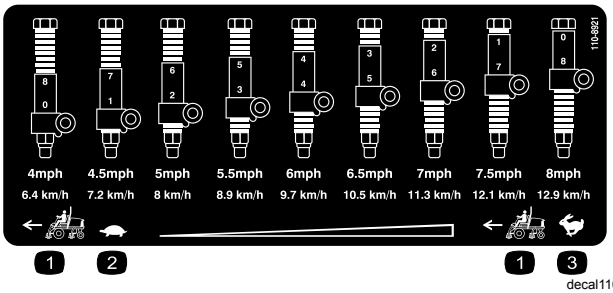


decal110-8921

**110-8921**

1. Traction unit speed
2. Slow
3. Fast

---

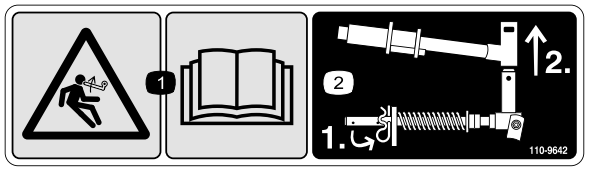


decal110-9642

**110-9642**

1. Stored energy hazard—read the *Operator's Manual*.
2. Move the cotter pin to the hole closest to the rod bracket and then remove the lift arm and pivot yoke.

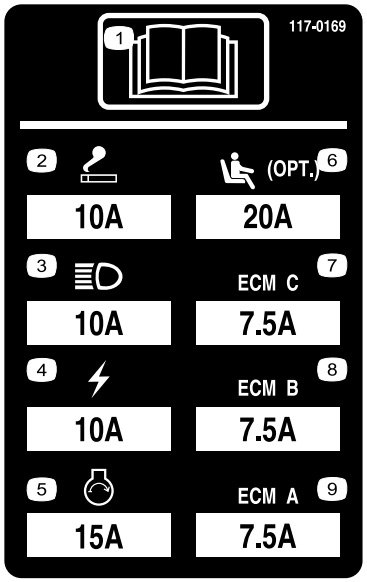


r:\decal117-0169

**117-0169**

1. Read the *Operator's Manual*.
2. Lighter
3. Headlights
4. Electric
5. Engine start
6. Air ride seat suspension (optional)
7. Engine computer management C
8. Engine computer management B
9. Engine computer management A

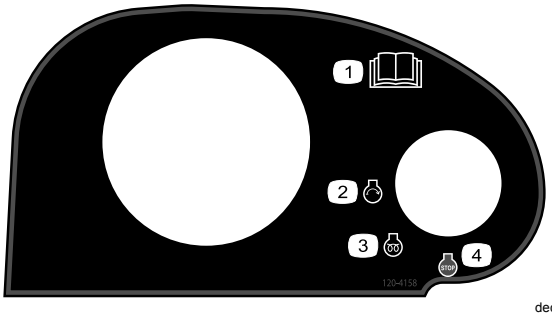


decal120-4158

**120–4158**

1. Read the *Operator's Manual*.
2. Engine—start
3. Engine—preheat
4. Engine—stop

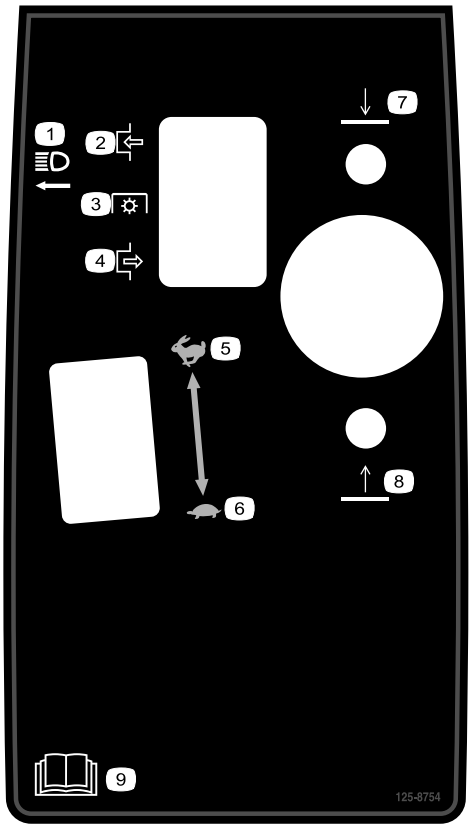


decal125-8754

**125–8754**

1. Head lights
2. Engage
3. Power take-off (PTO)
4. Disengage
5. Fast
6. Slow
7. Lower the cutting units
8. Raise the cutting units
9. Read the *Operator's Manual*.




decal133-8062

**133-8062**

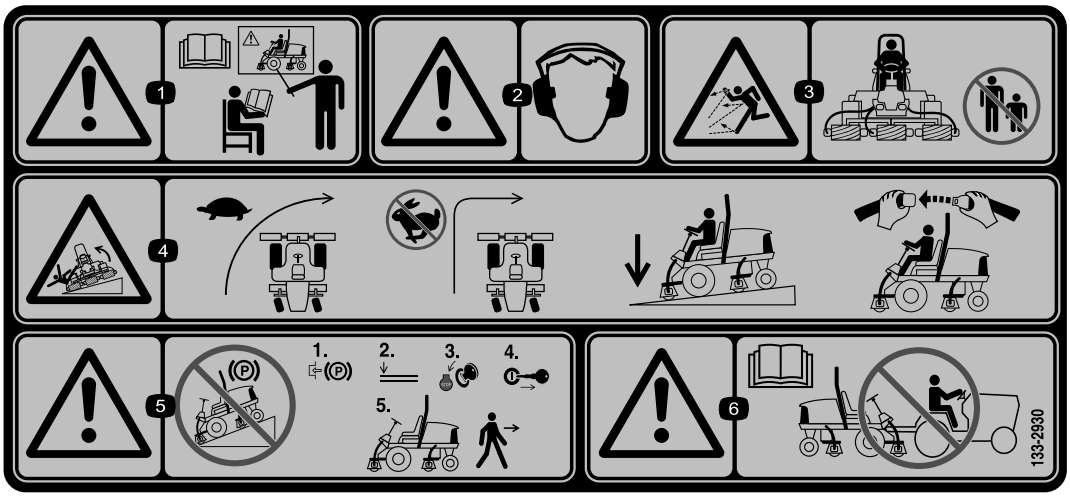


decal133-2930

**133-2930**

1. Warning—do not operate this machine unless you are trained.
2. Warning—wear hearing protection.
3. Thrown object hazard—keep bystanders out of the operating area.
4. Tipping hazard—drive slowly when turning; do not turn sharply while traveling fast; only drive on slopes with the cutting units lowered; always wear a seatbelt.
5. Warning—do not park on slopes; engage the parking brake, lower the cutting units, shut off the engine, and remove the ignition key before leaving the machine.
6. Warning—read the *Operator's Manual*; do not tow the machine.

---




decal133-2931

**133-2931**

**Note:** This machine complies with the industry standard stability test in the static lateral and longitudinal tests with the maximum recommended slope indicated on the decal. Review the instructions for operating the machine on slopes in the *Operator's Manual* as well as the conditions in which you would operate the machine to determine whether you can operate the machine in the conditions on that day and at that site. Changes in the terrain can result in a change in slope operation for the machine. If possible, keep the cutting units lowered to the ground while operating the machine on slopes. Raising the cutting units while operating on slopes can cause the machine to become unstable.

1. Warning—read the *Operator's Manual*; do not operate this machine unless you are trained.
2. Warning—wear hearing protection.
3. Thrown object hazard—keep bystanders away.
4. Tipping hazard—do not drive across or down slopes greater than 15°; only drive on slopes with the cutting units lowered; always wear a seatbelt.
5. Warning—do not park on slopes; engage the parking brake, lower the cutting units, shut off the engine, and remove the ignition key before leaving the machine.
6. Warning—read the *Operator's Manual*; do not tow the machine.

---



decalbatterysymbols

**Battery Symbols**

Some or all of these symbols are on your battery.

1. Explosion hazard
2. No fire, open flame, or smoking
3. Caustic liquid/chemical burn hazard
4. Wear eye protection.
5. Read the *Operator's Manual*.
6. Keep bystanders away from the battery.
7. Wear eye protection; explosive gases can cause blindness and other injuries.
8. Battery acid can cause blindness or severe burns.
9. Flush eyes immediately with water and get medical help fast.
10. Contains lead; do not discard

---

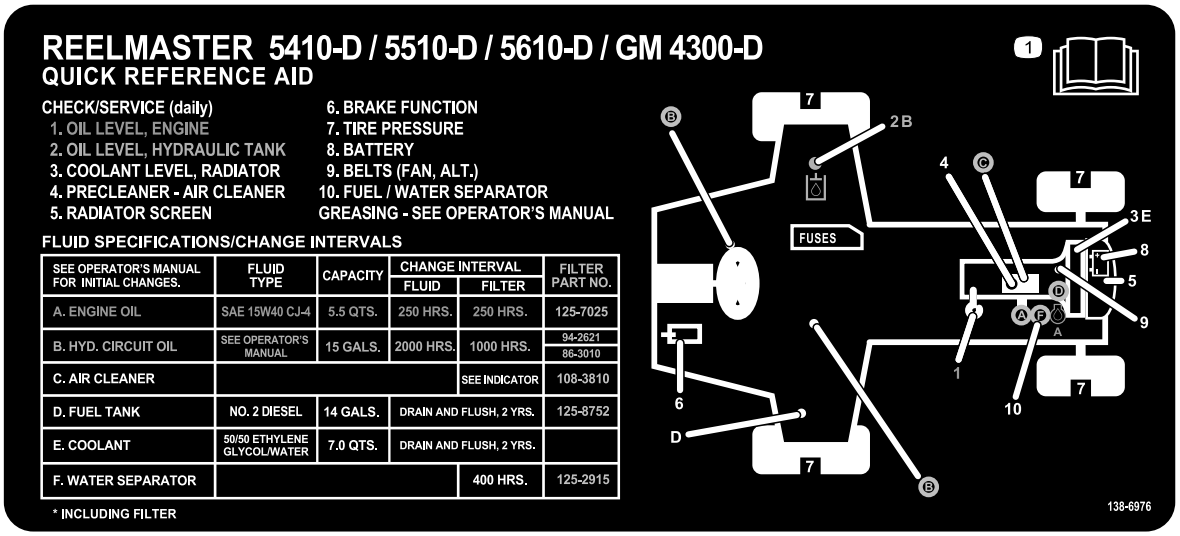


| SEE OPERATOR'S MANUAL FOR INITIAL CHANGES. | FLUID TYPE | CAPACITY | CHANGE INTERVAL | | FILTER PART NO. |
|---|---|---|---|---|---|
| | | | FLUID | FILTER | |
| A. ENGINE OIL | SAE 15W40 CJ-4 | 5.5 QTS. | 250 HRS. | 250 HRS. | 125-7025 |
| B. HYD. CIRCUIT OIL | SEE OPERATOR'S MANUAL | 15 GALS. | 2000 HRS. | 1000 HRS. | 94-2621<br>86-3010 |
| C. AIR CLEANER | | | | SEE INDICATOR | 108-3810 |
| D. FUEL TANK | NO. 2 DIESEL | 14 GALS. | DRAIN AND FLUSH, 2 YRS. | | 125-8752 |
| E. COOLANT | 50/50 ETHYLENE GLYCOL/WATER | 7.0 QTS. | DRAIN AND FLUSH, 2 YRS. | | |
| F. WATER SEPARATOR | | | | 400 HRS. | 125-2915 |

decal138-6976

**138-6976**

1. Read the *Operator's Manual*.

---

# Setup

## Loose Parts

Use the chart below to verify that all parts have been shipped.

| Procedure | Description | Qty. | Use |
|---|---|---|---|
| 1 | No parts required | – | Adjust the tire pressure. |
| 2 | No parts required | – | Adjust the control-arm position. |
| 3 | Right front hose guide<br>Left front hose guide | 1<br>1 | Install the cutting units. |
| 4 | No parts required | – | Adjust the turf-compensation spring. |
| 5 | Hood latch assembly<br>Washer | 1<br>1 | Install the CE hood latch. |
| 6 | Cutting-unit kickstand | 1 | Install the cutting-unit kickstand. |
| 7 | Warning decal<br>CE decal<br>Production year decal | 1<br>1<br>1 | Apply the CE decals. |

## Media and Additional Parts

| Description | Qty. | Use |
|---|---|---|
| Operator's Manual | 1 | Read the Operator's Manual before operating the machine. |
| Engine operator's manual | 1 | Read the manual before operating the engine. |
| Cutting performance paper | 1 | Adjust the cutting-unit bedknife to reel. |
| Shim | 1 | Adjust the cutting-unit bedknife to reel. |

**Note:** Determine the left and right sides of the machine from the normal operating position.

# 1

# Adjusting the Tire Pressure

**No Parts Required**

## Procedure

The tires are over-inflated for shipping. Therefore, release some of the air to reduce the pressure. Correct air pressure in the front and rear tires is 83 to 103 kPa (12 to 15 psi).

***Important:*** **Maintain even pressure in all tires to ensure that there is uniform contact with the turf.**

# 2

# Adjusting the Control-Arm Position

**No Parts Required**

## Procedure

You can adjust the control-arm position for your comfort.

1. Loosen the 2 bolts securing the control arm to the retaining bracket (Figure 3).

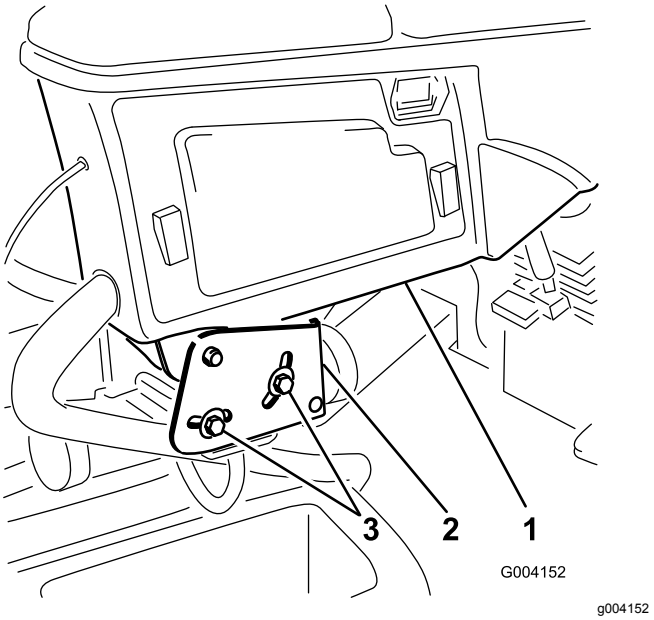


**Figure 3**

1. Control arm
2. Retaining brackets
3. Bolt

2. Rotate the control arm to the desired position and tighten the 2 bolts.

# 3

# Installing the Cutting Units

**Parts needed for this procedure:**

| | |
|---|---|
| 1 | Right front hose guide |
| 1 | Left front hose guide |

## Procedure

1. Remove the reel motors from the shipping brackets.

   **Note:** Discard the shipping brackets.

2. Remove the cutting units from the cartons.
3. Assemble and adjust the cutting units as described in the cutting unit *Operator's Manual*.
4. Make sure that the counter weight (Figure 4) is installed to the proper end of the cutting unit as described in the cutting unit *Operator's Manual*.

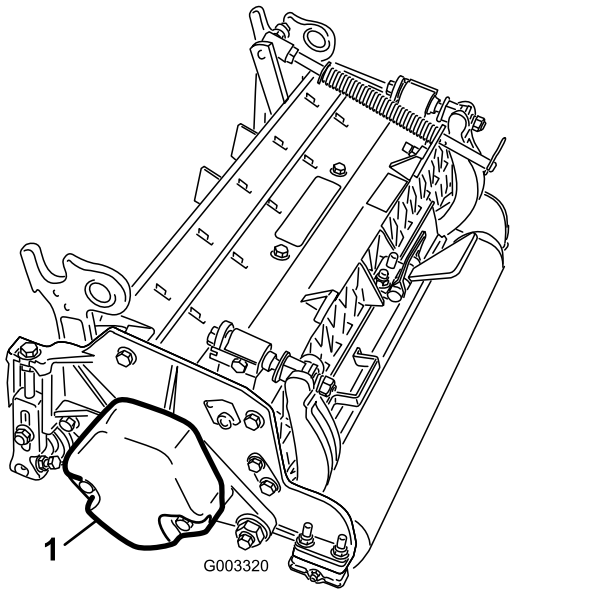


**Figure 4**

1. Counter weight

5. Mount the turf-compensation spring to the same side of the cutting unit as the reel-drive motor. Reposition the turf-compensation spring as follows:

   **Note:** All cutting units are shipped with the turf-compensation spring mounted to the right side of the cutting unit.

A. Remove the 2 carriage bolts and nuts securing the rod bracket to the cutting-unit tabs (Figure 5).

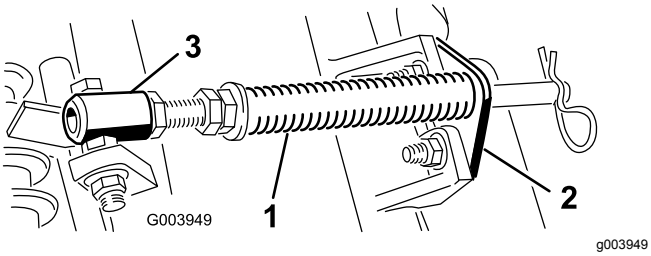


**Figure 5**

1. Turf-compensation spring
2. Rod bracket
3. Spring tube

B. Remove the flange nut securing the spring-tube bolt to the carrier-frame tab (Figure 5) Remove the assembly.

C. Mount the spring-tube bolt to the opposite tab on the carrier frame and secure with the flange nut.

**Note:** Position the bolt head to the outer side of the tab as shown in Figure 6.

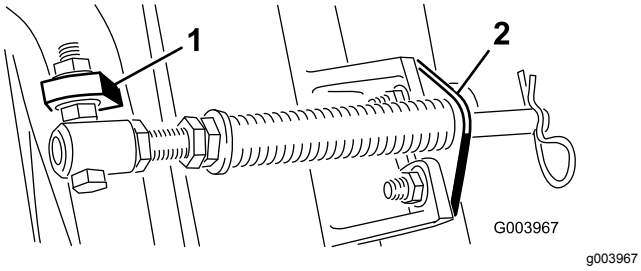


**Figure 6**

1. Opposite carrier-frame tab
2. Rod bracket

D. Mount the rod bracket to the cutting-unit tabs with the carriage bolts and nuts (Figure 6).

***Important:*** **On cutting unit 4 (left front) and cutting unit 5 (right front) , use the rod-bracket mounting nuts to install the hose guides to the front of the cutting-unit tabs (Figure 7 and Figure 8). The hose guides should lean toward the center cutting unit (Figure 8 and Figure 9).**

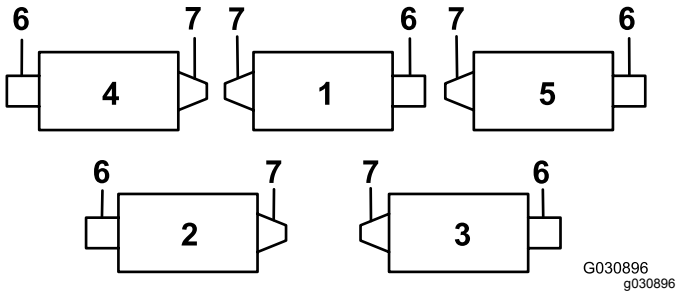


**Figure 7**

1. Cutting unit 1
2. Cutting unit 2
3. Cutting unit 3
4. Cutting unit 4
5. Cutting unit 5
6. Reel motor
7. Weight

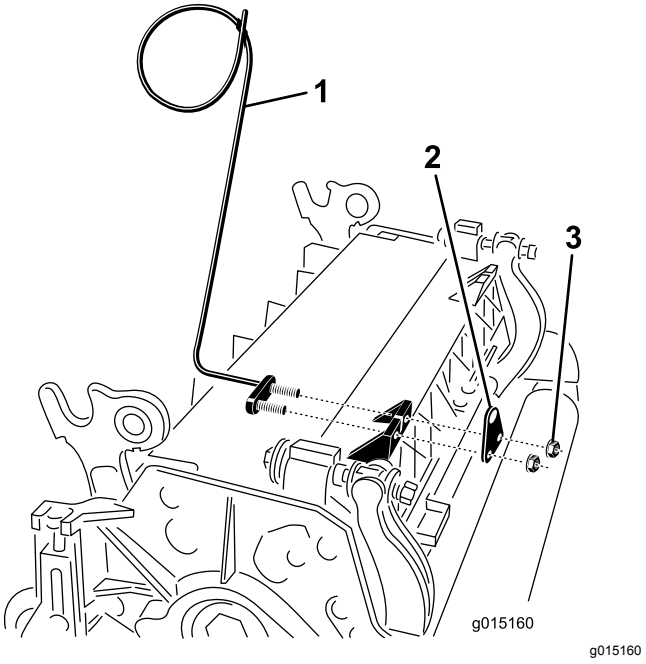


**Figure 8**

1. Hose guide (cutting unit 4 shown)
2. Rod bracket
3. Nut

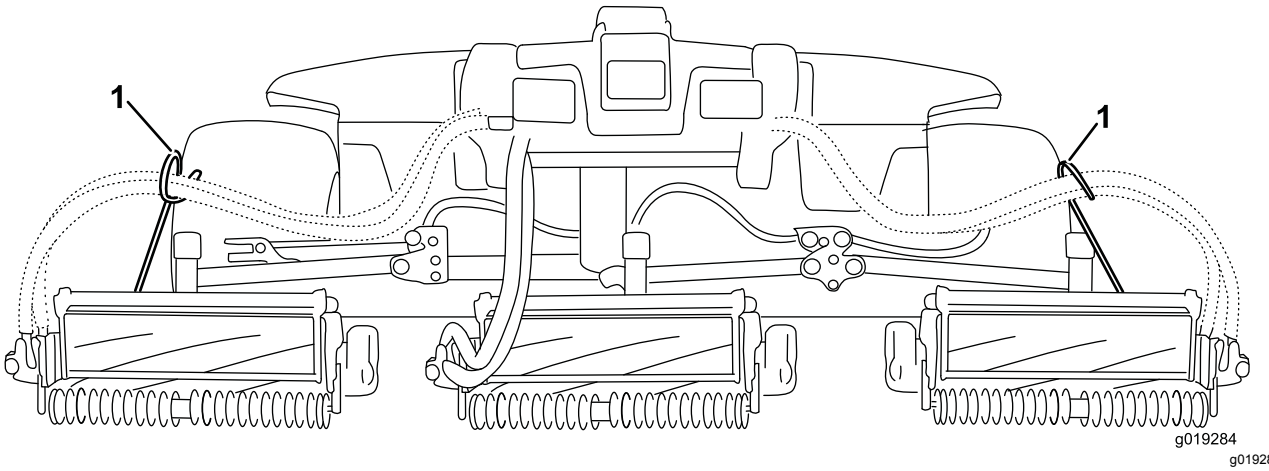


**Figure 9**

1. Hose guides must lean toward the center cutting unit.

**Note:** When installing or removing the cutting units, make sure the hairpin cotter is installed in the spring rod hole next to the rod bracket. Otherwise, the hairpin cotter must be installed in the hole in the end of the rod.

6. Lower all lift arms completely.
7. Remove the lynch pin from the lift-arm pivot yoke. Then, remove the cap (Figure 10).

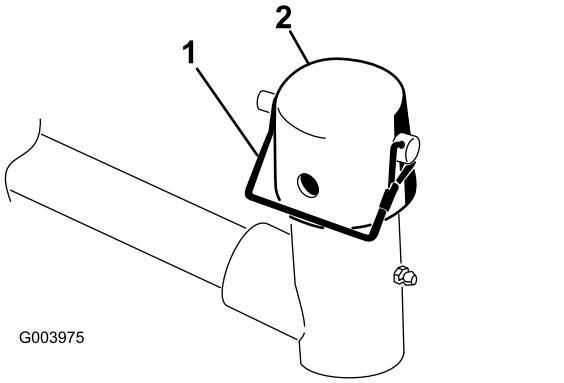


**Figure 10**

1. Lynch pin
2. Cap

8. For the front cutting units, slide a cutting unit under the lift arm while inserting the carrier-frame shaft up into the lift-arm-pivot yoke (Figure 11).

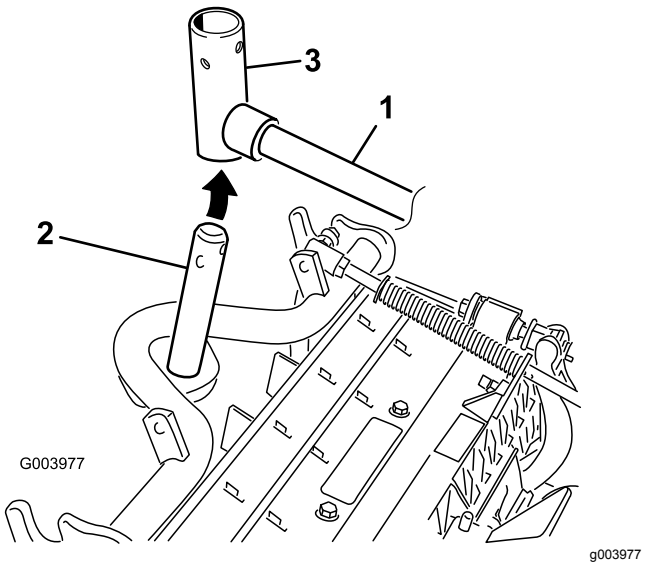


**Figure 11**

1. Lift arm
2. Carrier-frame shaft
3. Lift-arm-pivot yoke

9. Use the following procedure on the rear cutting units when the height of cut is above 19 mm (3/4 inch).
   A. Remove the lynch pin and washer securing the lift-arm-pivot shaft to the lift arm and slide the lift-arm-pivot shaft out of the lift arm (Figure 12).

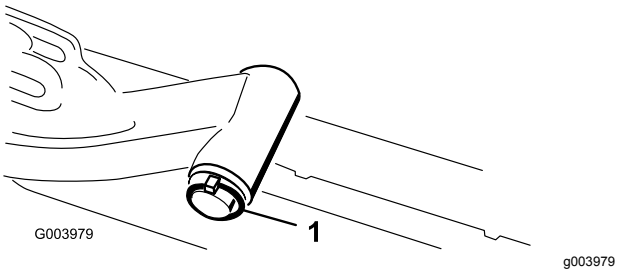


**Figure 12**

1. Lynch pin and washer

B. Insert the lift-arm yoke onto the carrier-frame shaft (Figure 11).

C. Insert the lift-arm shaft into the lift arm and secure it with the washer and lynch pin (Figure 12).

10. Insert the cap over the carrier-frame shaft and lift-arm yoke.

11. Secure the cap and the carrier-frame shaft to the lift-arm yoke with the snapper pin (Figure 10).

    **Note:** Use the slot if a steering cutting unit is desired or use the hole if the cutting unit is to be locked in position.

12. Secure the lift-arm chain to the chain bracket with the snapper pin (Figure 13).

    **Note:** Use the number of chain links described in the cutting unit *Operator's Manual*.

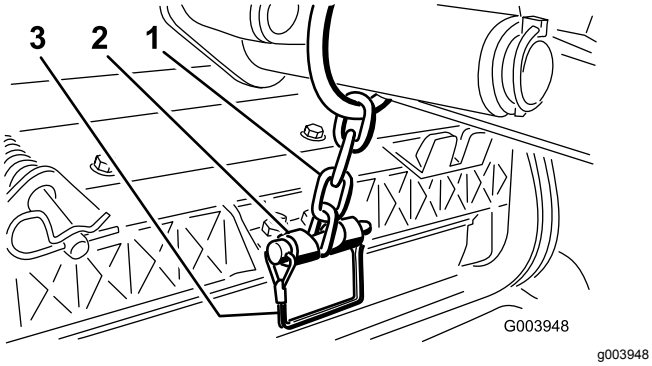


**Figure 13**

1. Lift-arm chain
2. Chain bracket
3. Snapper pin

13. On cutting unit 4 (left front) and cutting unit 5 (right front), insert the reel-motor hoses into the respective hose guide.

14. Coat the spline shaft of the reel motor with clean grease.

15. Oil the reel motor O-ring and install it onto the motor flange.

16. Install the motor by rotating it clockwise so that the motor flanges clear the bolts (Figure 14).

**Note:** Rotate the motor counterclockwise until the flanges encircle the bolts then tighten the bolts.

***Important:*** **Make sure that the reel-motor hoses are not twisted, kinked or in the risk of being pinched.**

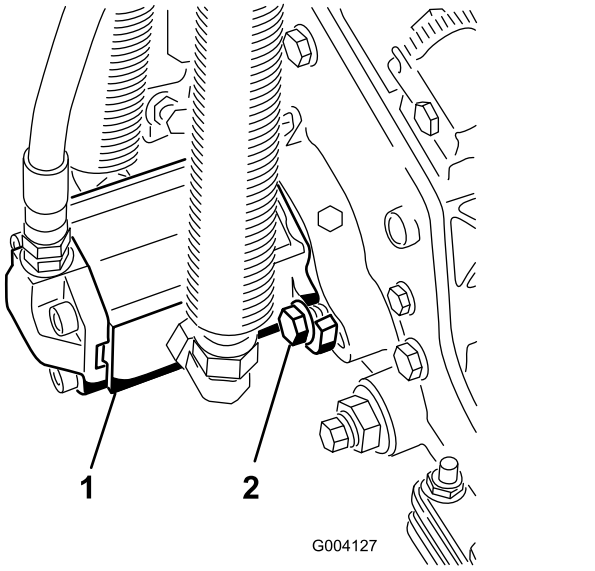


**Figure 14**

1. Reel-drive motor
2. Mounting bolts

# 4

# Adjusting the Turf-Compensation Spring

**No Parts Required**

## Procedure

The turf-compensation spring transfers weight from the front to the rear roller (Figure 15). This helps to reduce a wave pattern in the turf, also known as marcelling or bobbing.

***Important:*** **Make spring adjustments with the cutting unit mounted to the traction unit, pointing straight ahead and lowered to the ground.**

1. Make sure that the hairpin cotter is installed in the rear hole in the spring rod (Figure 15).

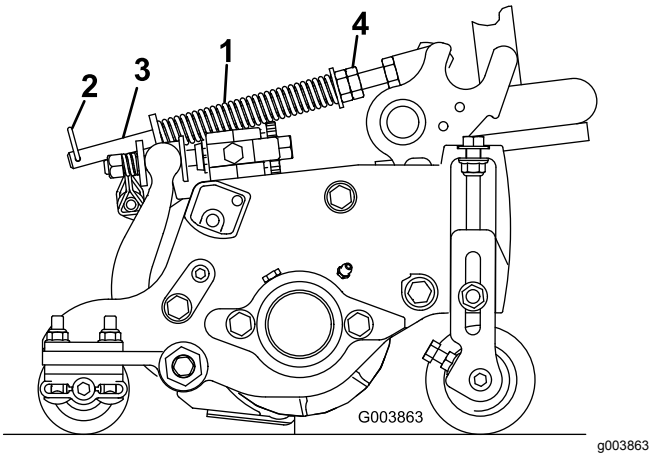


**Figure 15**

1. Turf-compensation spring
2. Hairpin cotter
3. Spring rod
4. Hex nuts

2. Tighten the hex nuts on the front end of the spring rod until the compressed length of the spring is 12.7 cm (5 inches) for 5-inch cutting units or 15.9 cm (6.25 inches) for 7-inch cutting units (Figure 15).

   **Note:** When operating on rough terrain, decrease the spring length by 12.7 mm (1/2 inch). This slightly decreases the ground following.

# 5

# Installing the CE Hood Latch

**Parts needed for this procedure:**

| | |
|---|---|
| 1 | Hood latch assembly |
| 1 | Washer |

## Procedure

1. Unlatch and raise the hood.
2. Remove the rubber grommet from the hole in the left side of the hood (Figure 16).

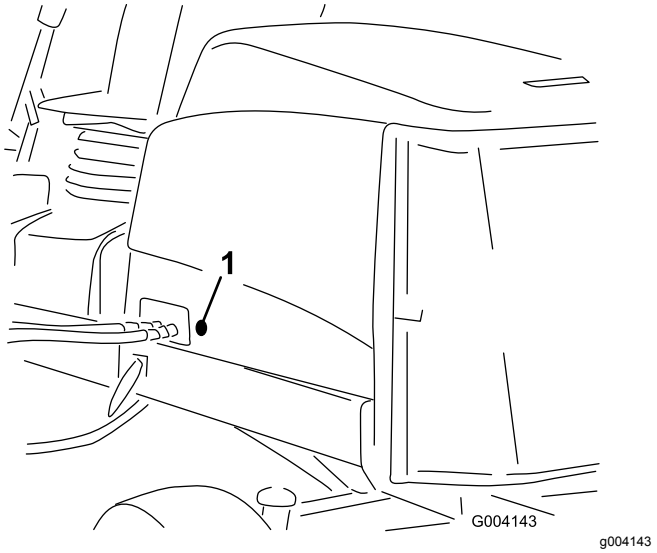


**Figure 16**

1. Rubber grommet

3. Remove the nut from the hood-latch assembly (Figure 17).

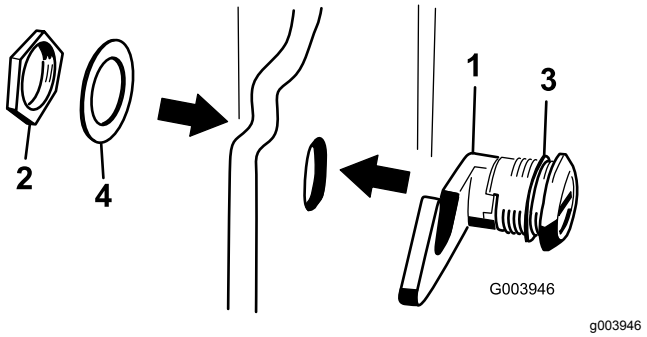


**Figure 17**

1. Hood latch
2. Nut
3. Rubber washer
4. Metal washer

4. Outside the hood, insert the hook end of the latch through the hole in the hood.

   **Note:** Make sure that the rubber sealing washer remains to the outer side of the hood.

5. Inside the hood, insert the metal washer onto the latch and secure with the nut.

   **Note:** Make sure that the latch engages the frame catch when it is locked. Use the enclosed hood latch key to operate the hood latch.

# 6

# Using the Cutting-Unit Kickstand

**Parts needed for this procedure:**

| | |
|---|---|
| 1 | Cutting-unit kickstand |

## Procedure

Whenever you need to tip the cutting unit to expose the bedknife/reel, prop up the rear of the cutting unit with the kickstand to make sure that the nuts on the back end of the bedbar-adjusting screws are not resting on the work surface (Figure 18).

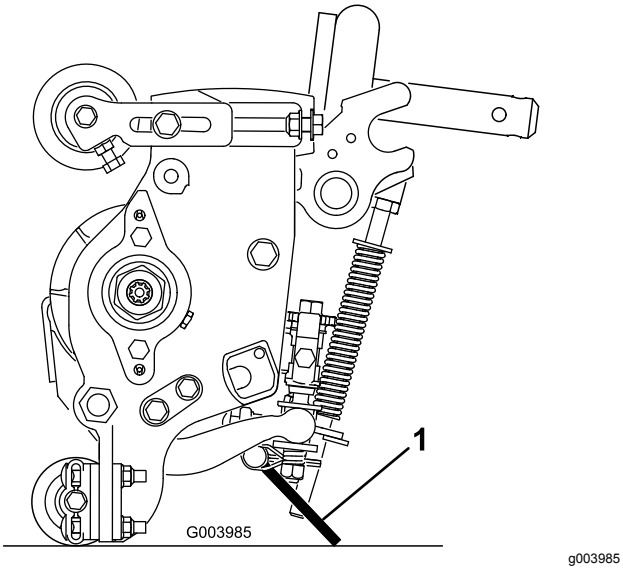


g003985

**Figure 18**

1. Cutting-unit kickstand

Secure the kickstand to the chain bracket with the snapper pin (Figure 19).

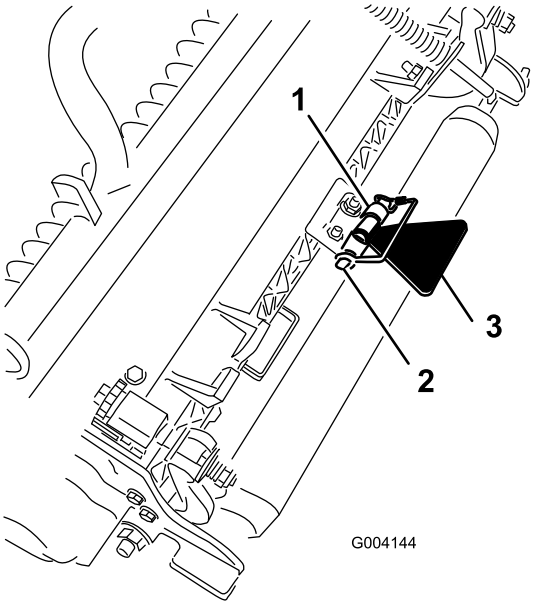


g004144

**Figure 19**

1. Chain bracket
2. Snapper pin
3. Cutting-unit kickstand

# 7

# Applying the CE Decals

**Parts needed for this procedure:**

| | |
|---|---|
| 1 | Warning decal |
| 1 | CE decal |
| 1 | Production year decal |

## Procedure

On machines requiring CE compliance, apply the production year decal (Part No. 133-5615) near the serial plate, the CE decal (Part No. 93-7252) near the hood lock, and the CE warning decal (Part No. 133-2931) over the standard warning decal (Part No. 133-2930).

# Product Overview

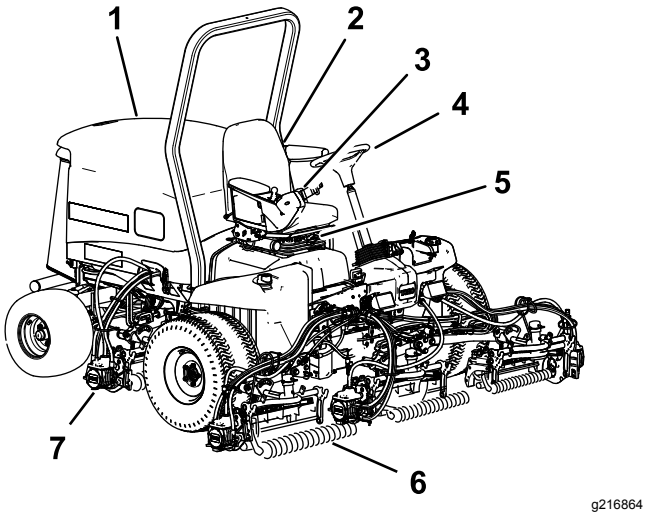


**Figure 20**

1. Engine hood
2. Seat
3. Control arm
4. Steering wheel
5. Seat adjustments
6. Front cutting units
7. Rear cutting units

# Controls

## Seat-Adjusting Knobs

The seat-adjusting lever allows you to adjust the seat forward and rearward (Figure 21). The weight-adjusting knob adjusts the seat for your weight. The weight gauge indicates when the seat is adjusted to your weight. The height-adjusting knob adjusts the seat for your height.

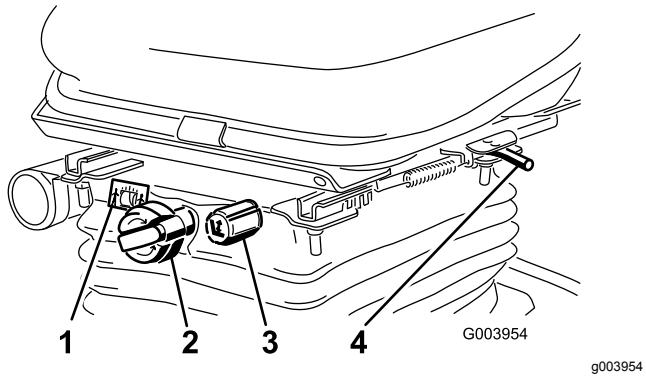


**Figure 21**

1. Weight gauge
2. Weight-adjusting knob
3. Height-adjusting knob
4. Adjusting lever

## Traction Pedal

The traction pedal controls the forward and reverse operation (Figure 22). Press the top of the pedal to move forward and the bottom to move rearward. The ground speed depends on how far you press the pedal. For no load, maximum ground speed, set the engine speed to the FAST position and fully press the pedal.

To stop the machine, reduce foot pressure on the traction pedal and allow it to return to the center position.

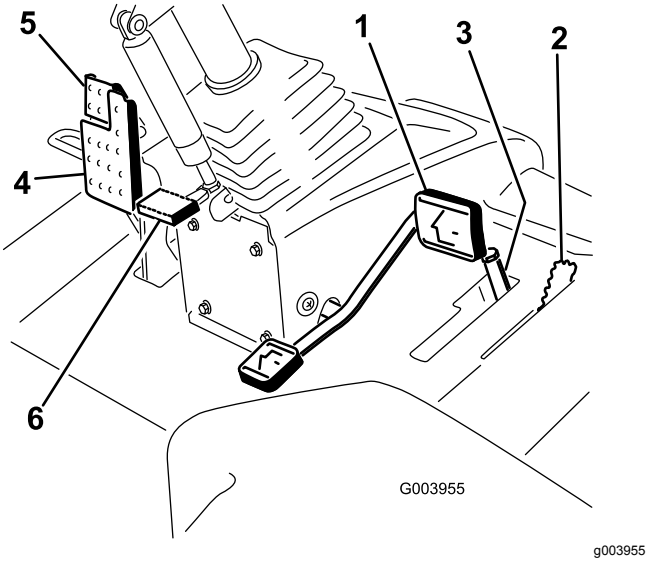


**Figure 22**

1. Traction pedal
2. Mow-speed limiter
3. Spacers
4. Brake pedal
5. Parking brake
6. Tilt-steering pedal

## Mow-Speed Limiter

When the mow-speed limiter is flipped up, it controls the mow speed and allows the cutting units to be engaged (Figure 22). Each spacer adjusts the mowing speed by 0.8 km/h (0.5 mph). The more spacers you have on the top of the bolt, the slower the mowing speed. To transport the machine, flip back the mow-speed limiter for the maximum transport speed.

## Brake Pedal

Press the brake pedal to stop the machine (Figure 22).

## Parking Brake

To engage the parking brake, push down on the brake pedal and press the top forward to latch (Figure 22). To release the parking brake, press the brake pedal until the parking-brake latch retracts.

## Tilt-Steering Pedal

To tilt the steering wheel toward you, press the foot pedal down, pull the steering tower toward you to the most comfortable position, and release the pedal (Figure 22).

## Engine-Speed Switch

The engine-speed switch has 2 modes to change the engine speed (Figure 23). By momentarily tapping the switch, you can change the engine speed in 100 rpm increments. If you hold the switch down, the engine automatically moves to High or Low idle, depending on which end of the switch you press.

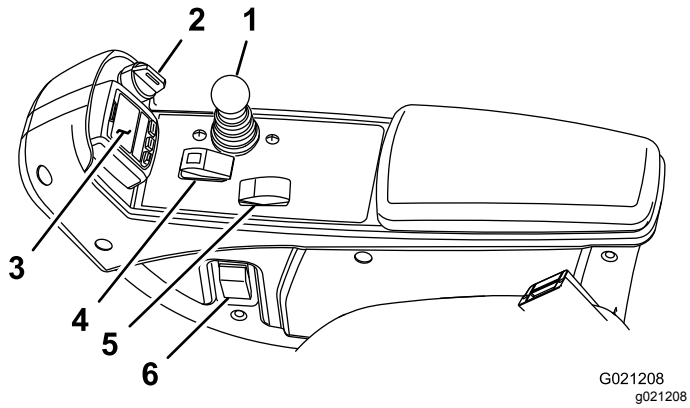


**Figure 23**

1. Lower mow/raise control lever
2. Key switch
3. InfoCenter
4. Enable/disable switch
5. Engine-speed switch
6. Headlight switch

## Enable/Disable Switch

Use the enable/disable switch in conjunction with the lower mow/raise control lever to operate the cutting units (Figure 23).

## InfoCenter

The InfoCenter LCD display shows information about your machine, such as the operating status, various diagnostics, and other information about the machine (Figure 23).

## Key Switch

The key switch has 3 positions: OFF, ON/RUN, and START (Figure 23).

## Lower Mow/Raise Control Lever

This lever raises and lowers the cutting units and also starts and stops the cutting units when the cutting units are enabled in the MOW mode (Figure 23). You cannot lower the cutting units when the mow/transport lever is in the TRANSPORT position.

## Headlight Switch

Pivot the switch downward to turn on the headlights (Figure 23).

## Backlap Levers

Use the backlap levers in conjunction with the lower mow/raise control lever for backlapping the reels (Figure 24).

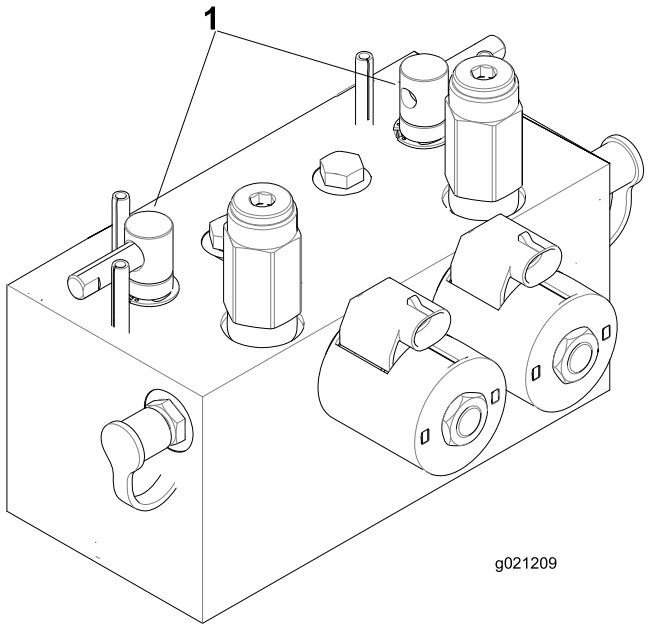


**Figure 24**

1. Backlap levers

## Hydraulic-Filter-Restriction Indicator

With the engine running at normal operating temperature, ensure that the indicator is in the green zone (Figure 25). When the indicator is in the red zone, change the hydraulic filters.

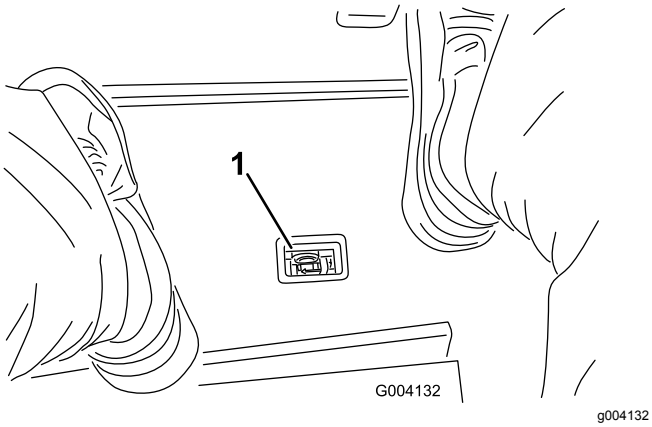


**Figure 25**

1. Hydraulic-filter-restriction indicator

## Power Point

The power point is a 12 V power supply for electronic devices (Figure 26).

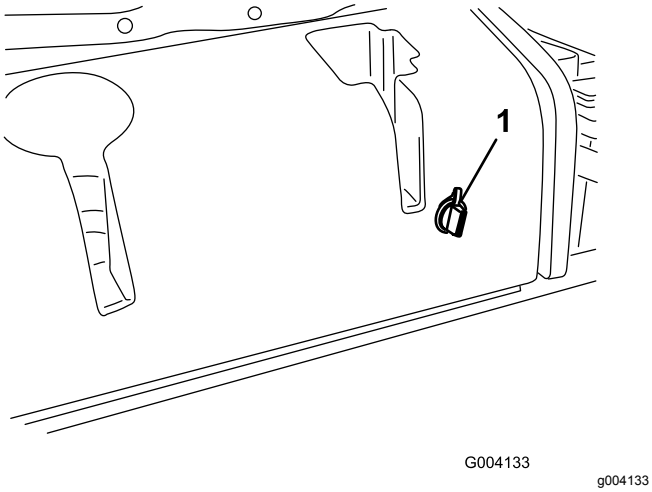


**Figure 26**

1. Power point

## Using the InfoCenter LCD Display

The InfoCenter LCD display shows information about your machine, such as the operating status, various diagnostics, and other information about the machine (Figure 27). There is a splash screen and main information screen of the InfoCenter. You can switch between the splash screen and main information screen, at any time, by pressing any of the InfoCenter buttons and then selecting the appropriate directional arrow.

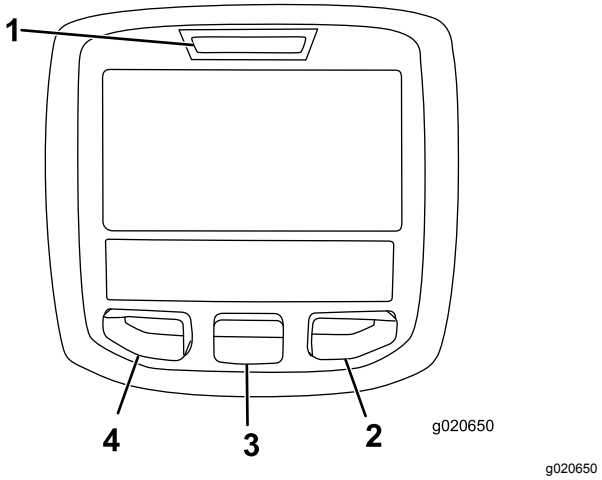


**Figure 27**

1. Indicator light
2. Right button
3. Middle button
4. Left button

- Left Button, Menu Access/Back Button— Press this button to access the InfoCenter menus. You can use it to back out of any menu you are currently using.
- Middle Button— Press this button to scroll down menus.
- Right Button— Press this button to open a menu where a right arrow indicates additional content.

**Note:** The purpose of each button may change depending on what is required at the time. Each button is labeled with an icon displaying its current function.

# InfoCenter Icon Description

| | |
|---|---|
| | Hours remaining until service |
| | Reset the service hours 🔒 |
| **SERVICE DUE** | Indicates when scheduled service should be performed |
| n min | Engine rpm/status—indicates the engine speed (rpm) |
| | Hour meter |
| i | Info icon |
| | Fast |
| | Slow |
| | Fuel level |
| | Stationary regeneration is required. |
| | The glow plugs are active. |
| | Raise the cutting units. |
| | Lower the cutting units. |
| | Sit in the seat. |
| (P) | Parking brake is On. |
| H | The range is high (transport). |
| N | Neutral |
| L | The range is low (mow). |
| | Engine-coolant temperature (°C or °F) |
| | Temperature (hot) |
| | The PTO is engaged. |
| | Not allowed |

| | |
|---|---|
| | Start the engine. |
| | Shut off the engine. |
| | Engine |
| | Key switch |
| | The cutting units are lowering. |
| | The cutting units are raising. |
| PIN | PIN code |
| CAN | CAN bus |
| | InfoCenter |
| Bad | Bad or failed |
| | Bulb |
| OUT | Output of TEC controller or control wire in harness |
| | Switch |
| | Release the switch. |
| | Change to the indicated state. |
| Symbols are often combined to form sentences. Some examples are shown below | |
| N | Put the machine into Neutral. |
| | Engine start is denied. |
| STOP | Engine shutdown |
| | Engine coolant is too hot. |
| 48.1g/l | DPF ash-accumulation notification—Refer to DPF Ash Accumulation (page 29) for details. |
| | Reset-standby regeneration request |
| | Parked or recovery regeneration request |

| | |
|---|---|
|   | A parked or recovery regeneration is processing. |
|  | High exhaust temperature |
|  | NOx control diagnosis malfunction; drive the machine back to the shop and contact your authorized Toro distributor (software version U and later). |
|  | The power take-off is disabled. |
|   | Sit down or engage the parking brake. |

🔒 Accessible only by entering PIN

# Using the Menus

To access the InfoCenter menu system, press the menu access button while at the main screen. This brings you to the main menu. Refer to the following tables for a synopsis of the options available from the menus:

| Main Menu | |
|---|---|
| **Menu Item** | **Description** |
| Faults | Contains a list of the recent machine faults. Refer to the *Service Manual* or contact your authorized Toro distributor for more information on the Faults menu and the information contained there. |
| Service | Contains information on the machine such as hours of use counters and other similar numbers. |
| Diagnostics | Displays the state of each machine switch, sensor and control output. You can use this to troubleshoot certain issues as it quickly tells you which machine controls are on and which are off. |
| Settings | Allows you to customize and modify configuration variables on the InfoCenter display |
| About | Lists the model number, serial number, and software version of your machine |

| Service | |
|---|---|
| **Menu Item** | **Description** |
| Hours | Lists the total number of hours that the machine, engine and PTO have been on, as well as the number of hours the machine has been transported and service due |
| Counts | Lists the number of starts, cutting unit/PTO cycles, and fan reversals the machine has experienced |
| DPF Regeneration | The diesel particulate filter regeneration option and DPF submenus |
| Inhibit Regen | Use to control reset regeneration |
| Parked Regen | Use to initiate a parked regeneration |
| Last Regen | Lists the number hours since the last reset, parked, or recovery regeneration |
| Recover Regen | Use to initiate a recovery regeneration |
| Counts | Lists numerous counts the machine has experienced |

| Diagnostics | |
|---|---|
| **Menu Item** | **Description** |
| Cutting Units | Indicates the inputs, qualifiers and outputs for raising and lowering the cutting units. |
| Hi/Low Range | Indicates the inputs, qualifiers and outputs for driving in transport mode. |
| PTO | Indicates the inputs, qualifiers and outputs for enabling the PTO circuit. |
| Engine Run | Indicates the inputs, qualifiers and outputs for starting the engine. |
| Backlap | Indicates the inputs, qualifiers and outputs for operating the backlap function. |

| Settings | |
|---|---|
| **Menu Item** | **Description** |
| Units | Controls the units used on the InfoCenter. The menu choices are English or metric. |
| Language | Controls the language used on the InfoCenter*. |
| LCD Backlight | Controls the brightness of the LCD display. |
| LCD Contrast | Controls the contrast of the LCD display. |
| Front Backlap Reel Speed | Controls the speed of the front reels in backlap mode. |
| Rear Backlap Reel Speed | Controls the speed of the rear reels in backlap mode. |
| Protected Menus | Allows a person authorized by your company with the PIN code to access protected menus. |
| Auto Idle 🔒 | Controls the amount of time allowed before returning the engine to low idle when the machine is stationary. |
| Blade Count 🔒 | Controls the number of blades on the reel for reel speed. |
| Mow Speed 🔒 | Controls the ground speed for determining the reel speed. |
| Height of cut (HOC) 🔒 | Controls the height of cut (HOC) for determining the reel speed. |

| | |
|---|---|
| F Reel RPM 🔒 | Displays the calculated reel speed position for the front reels. The reels can also be manually adjusted. |
| R Reel RPM 🔒 | Displays the calculated reel speed position for the rear reels. The reels can also be manually adjusted. |

*Only operator-faced text is translated. Faults, Service, and Diagnostics screens are service-faced. Titles appear in the selected language, but menu items are in English.

🔒 Protected under Protected Menus—accessible only by entering PIN

| About | |
|---|---|
| **Menu Item** | **Description** |
| Model | Lists the model number of the machine. |
| SN | Lists the serial number of the machine. |
| Machine-Controller Revision | Lists the software revision of the master controller. |
| InfoCenter Revision | Lists the software revision of the InfoCenter. |
| CAN Bus | Lists the machine communication bus status. |

## Protected Menus

There are 8 operating configuration settings that are adjustable within the Settings Menu of the InfoCenter: auto idle time delay, Blade Count, Mow Speed, Height of Cut (HOC), F Reel RPM, and R Reel RPM. These settings can be locked by using the Protected Menu.

**Note:** At the time of delivery, the initial password code is programmed by your distributor.

## Accessing Protected Menus

**Note:** The factory default PIN code for you machine is either 0000 or 1234.

If you changed the PIN code and forgot the code, contact your authorized Toro distributor for assistance.

1. From the MAIN MENU, use the center button to scroll down to the SETTINGS MENU and press the right button (Figure 28).

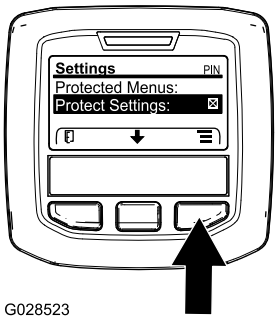


g028523

**Figure 28**

2. In the SETTINGS MENU, use the center button to scroll down to the PROTECTED MENU and press the right button (Figure 29A).

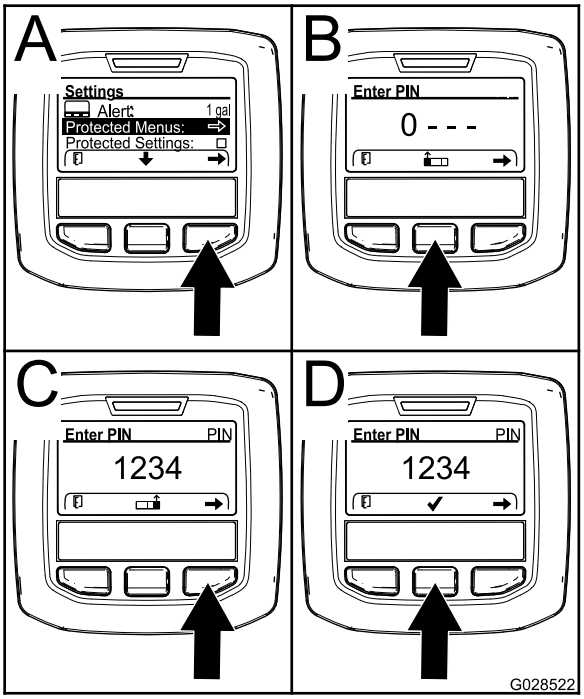


g028522

**Figure 29**

3. To enter the PIN code, press the center button until the correct first digit appears, then press the right button to move on to the next digit (Figure 29B and Figure 29C). Repeat this step until the last digit is entered and press the right button once more.

4. Press the middle button to enter the PIN code (Figure 29D).

   Wait until the red indicator light of the InfoCenter illuminates.

   **Note:** If the InfoCenter accepts the PIN code and the protected menu is unlocked, the word “PIN” displays in the upper right corner of the screen.

**Note:** Rotate the key switch to the OFF position and then to the ON position locks the protected menu.

You have the ability to view and change the settings in the Protected Menu. Once you access the Protected Menu, scroll down to Protect Settings option. Use the right button to change the setting. Setting the Protect Settings to OFF allows you to view and change the settings in the Protected Menu without entering the PIN code. Setting the Protect Settings to ON hides the protected options and requires you to enter the PIN code to change the setting in the Protected Menu. After you set the PIN code, rotate the key switch OFF and back to the ON position to enable and save this feature.

## Viewing and Changing the Protected Menu Settings

1. In the Protected Menu, scroll down to Protect Settings.
2. To view and change the settings without entering a passcode, use the right button to change the Protect Settings to OFF.
3. To view and change the settings with a passcode, use the left button to change the Protect Settings to ON, set the passcode, and turn the key to the OFF position and then to the ON position.

## Setting the Auto Idle

1. In the Settings Menu, scroll down to Auto Idle.
2. Press the right button to change the auto idle time between OFF, 8S, 10S, 15S, 20S, and 30S.

## Setting the Blade Count

1. In the Settings Menu, scroll down to Blade Count.
2. Press the right button to change the blade count between 5, 8, or 11 blade reels.

## Setting the Mow Speed

1. In the Settings Menu, scroll down to Mow Speed.
2. Press the right button to select mow speed.
3. Use the center and right button to select the appropriate mow speed set on the mechanical mow-speed limiter on the traction pedal.
4. Press the left button to exit mow speed and save the setting.

## Setting the Height of Cut (HOC)

1. In the Settings Menu, scroll down to HOC.
2. Press the right button to select HOC.
3. Use the center and right button to select the appropriate HOC setting. (If the exact setting is not displayed, select the nearest HOC setting from the list displayed).
4. Press the left button to exit HOC and save the setting.

## Setting the Front and Rear Reel Speeds

Although the front and rear reel speeds are calculated by inputting the number of blades, mow speed and HOC into the InfoCenter, the setting can be manually changed to accommodate for different mowing conditions.

1. To change the Reel Speed Settings, scroll down to the F Reel RPM, R Reel RPM, or both.
2. Press the right button to change the reel speed value. As you change the speed setting, the display continues to show the calculated reel speed based on blade count, mow speed and HOC, which was previously entered, but the new value is also displayed.

# Specifications

**Note:** Specifications and design are subject to change without notice.

| Specification | ReelMaster® 5610-D |
|---|---|
| Transport width | 233 cm (92 inches) |
| Width of cut | 254 cm (100 inches) |
| Length | 282 cm (111 inches) |
| Height | 160 cm (63 inches) |
| Weight<br>(with fluids and 8-blade cutting units installed) | 1420 kg (3,131 lb) |
| Engine | Yanmar<br>43 hp |
| Fuel-tank capacity | 53 L (14 US gallons) |
| Transport speed | 0 to 16 km/h (0 to 10 mph) |
| Mowing speed | 0 to 13 km/h (0 to 8 mph) |

## Attachments/Accessories

A selection of Toro approved attachments and accessories is available for use with the machine to enhance and expand its capabilities. Contact your Authorized Service Dealer or authorized Toro distributor or go to www.Toro.com for a list of all approved attachments and accessories.

To ensure optimum performance and continued safety certification of the machine, use only genuine Toro replacement parts and accessories. Replacement parts and accessories made by other manufacturers could be dangerous, and such use could void the product warranty.

# Operation

**Note:** Determine the left and right sides of the machine from the normal operating position.

# *Before Operation*

# Before Operation Safety

## General Safety

- Never allow children or untrained people to operate or service the machine. Local regulations may restrict the age of the operator. The owner is responsible for training all operators and mechanics.
- Become familiar with the safe operation of the equipment, operator controls, and safety signs.
- Shut off the engine, remove the key, and wait for all movement to stop before you leave the operator's position. Allow the machine to cool before adjusting, servicing, cleaning, or storing it.
- Know how to stop the machine and shut off the engine quickly.
- Do not operate the machine without all guards and other safety protective devices in place and functioning properly on the machine.
- Before mowing, always inspect the machine to ensure that the cutting units are in good working condition.
- Inspect the area where you will use the machine and remove all objects that the machine could throw.

## Fuel Safety

- Use extreme care in handling fuel. It is flammable and its vapors are explosive.
- Extinguish all cigarettes, cigars, pipes, and other sources of ignition.
- Use only an approved fuel container.
- Do not remove the fuel cap or fill the fuel tank while the engine is running or hot.
- Do not add or drain fuel in an enclosed space.
- Do not store the machine or fuel container where there is an open flame, spark, or pilot light, such as on a water heater or other appliance.
- If you spill fuel, do not attempt to start the engine; avoid creating any source of ignition until the fuel vapors have dissipated.

# Performing Daily Maintenance

**Service Interval:** Before each use or daily

Before starting the machine each day, perform the Each Use/Daily procedures listed in Maintenance (page 46).

# Filling the Fuel Tank

## Fuel Tank Capacity

53 L (14 US gallons)

## Fuel Specification

***Important:*** **Use only ultra-low sulphur diesel fuel. Fuel with higher rates of sulfur degrades the diesel oxidation catalyst (DOC), which causes operational problems and shortens the service life of engine components.**

**Failure to observe the following cautions may damage the engine.**

- Never use kerosene or gasoline instead of diesel fuel.
- Never mix kerosene or used engine oil with the diesel fuel.
- Never keep fuel in containers with zinc plating on the inside.
- Do not use fuel additives.

### Petroleum Diesel

**Cetane rating:** 45 or higher

**Sulfur content:** Ultra-low sulfur (<15 ppm)

### Fuel Table

| Diesel fuel specification | Location |
|---|---|
| ASTM D975<br>No. 1-D S15<br>No. 2-D S15 | USA |
| EN 590 | European Union |
| ISO 8217 DMX | International |
| JIS K2204 Grade No. 2 | Japan |
| KSM-2610 | Korea |

- Use only clean, fresh diesel fuel or biodiesel fuels.
- Purchase fuel in quantities that can be used within 180 days to ensure fuel freshness.

Use summer-grade diesel fuel (No. 2-D) at temperatures above -7°C (20°F) and winter-grade fuel (No. 1-D or No. 1-D/2-D blend) below that temperature.

**Note:** Use of winter-grade fuel at lower temperatures provides lower flash point and cold flow characteristics which eases starting and reduces fuel filter plugging.

Using summer-grade fuel above -7°C (20°F) contributes toward longer fuel pump life and increased power compared to winter-grade fuel.

### Biodiesel

This machine can also use a biodiesel blended fuel of up to B20 (20% biodiesel, 80% petroleum diesel).

**Sulfur content:** Ultra-low sulfur (<15 ppm)

**Biodiesel fuel specification:** ASTM D6751 or EN14214

**Blended fuel specification:** ASTM D975, EN590, or JIS K2204

***Important:*** **The petroleum diesel portion must be ultra-low sulfur.**

Observe the following precautions:

- Biodiesel blends may damage painted surfaces.
- Use B5 (biodiesel content of 5%) or lesser blends in cold weather.
- Monitor seals, hoses, gaskets in contact with fuel as they may be degraded over time.
- Fuel filter plugging may be expected for a time after converting to biodiesel blends.
- Contact your authorized Toro distributor for more information on biodiesel.

## Adding Fuel

1. Park the machine on a level surface, lower the cutting units, engage the parking brake, shut off the engine, and remove the key.

2. Using a clean rag, clean area around fuel-tank cap.
3. Remove the cap from the fuel tank (Figure 30).

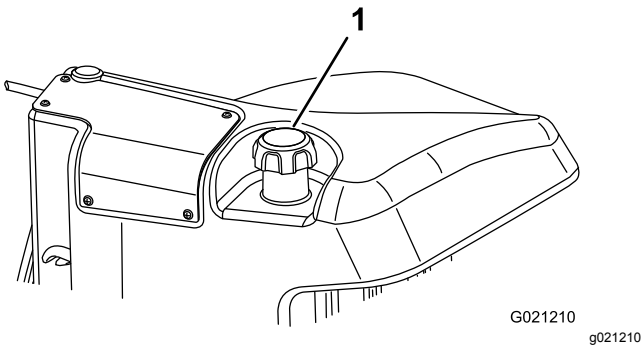


**Figure 30**

1. Fuel-tank cap

4. Fill the tank until the level is 6 to 13 mm (1/4 to 1/2 inch) below the bottom of the filler neck.
5. Install the fuel-tank cap tightly after filling the tank.

   **Note:** If possible, fill the fuel tank after each use. This minimizes possible buildup of condensation inside the fuel tank.

# *During Operation*

# During Operation Safety

## General Safety

- The owner/operator can prevent and is responsible for accidents that may cause personal injury or property damage.
- Wear appropriate clothing, including eye protection; long pants; substantial, slip-resistant footwear; and hearing protection. Tie back long hair and do not wear loose clothing or loose jewelry.
- Do not operate the machine while ill, tired, or under the influence of alcohol or drugs.
- Use your full attention while operating the machine. Do not engage in any activity that causes distractions; otherwise, injury or property damage may occur.
- Before you start the engine, ensure that all drives are in neutral, the parking brake is engaged, and you are in the operating position.
- Do not carry passengers on the machine and keep bystanders and children out of the operating area.
- Operate the machine only in good visibility to avoid holes or hidden hazards.
- Avoid mowing on wet grass. Reduced traction could cause the machine to slide.
- Keep your hands and feet away from the cutting units.
- Look behind and down before backing up to be sure of a clear path.
- Use care when approaching blind corners, shrubs, trees, or other objects that may obscure your vision.
- Stop the cutting units whenever you are not mowing.
- Slow down and use caution when making turns and crossing roads and sidewalks with the machine. Always yield the right-of-way.
- Operate the engine only in well-ventilated areas. Exhaust gases contain carbon monoxide, which is lethal if inhaled.
- Do not leave a running machine unattended.
- Before you leave the operator's position, do the following:
  - Park the machine on a level surface.
  - Disengage the cutting unit(s) and lower the attachments.
  - Engage the parking brake.
  - Shut off the engine and remove the key.
  - Wait for all movement to stop.
- Operate the machine only in good visibility and appropriate weather conditions. Do not operate the machine when there is the risk of lightning.

## Rollover Protection System (ROPS) Safety

- Do not remove any of the ROPS components from the machine.
- Ensure that the seat belt is attached and that you can release it quickly in an emergency.
- Always wear your seat belt.
- Check carefully for overhead obstructions and do not contact them.
- Keep the ROPS in safe operating condition by thoroughly inspecting it periodically for damage and keeping all the mounting fasteners tight.
- Replace all damaged ROPS components. Do not repair or alter them.

## Slope Safety

- Slopes are a major factor related to loss of control and rollover accidents, which can result in severe

injury or death. You are responsible for safe slope operation. Operating the machine on any slope requires extra caution.

- Evaluate the site conditions to determine if the slope is safe for machine operation, including surveying the site. Always use common sense and good judgment when performing this survey.
- Review the slope instructions, listed below, for operating the machine on slopes. Before you operate the machine, review the site conditions to determine whether you can operate the machine in the conditions on that day and at that site. Changes in the terrain can result in a change in slope operation for the machine.
  - Avoid starting, stopping, or turning the machine on slopes. Avoid making sudden changes in speed or direction. Make turns slowly and gradually.
  - Do not operate a machine under any conditions where traction, steering, or stability is in question.
  - Remove or mark obstructions such as ditches, holes, ruts, bumps, rocks, or other hidden hazards. Tall grass can hide obstructions. Uneven terrain could overturn the machine.
  - Be aware that operating the machine on wet grass, across slopes, or downhill may cause the machine to lose traction.
  - Use extreme caution when operating the machine near drop-offs, ditches, embankments, water hazards, or other hazards. The machine could suddenly roll over if a wheel goes over the edge or the edge caves in. Establish a safety area between the machine and any hazard.
  - Identify hazards at the base of the slope. If there are hazards, mow the slope with a pedestrian-controlled machine.
  - If possible, keep the cutting units lowered to the ground while operating on slopes. Raising the cutting units while operating on slopes can cause the machine to become unstable.

# Starting the Engine

***Important:*** **The fuel system automatically bleeds itself when any of the following situations occur:**

- You are starting a new machine for the first time.
- The engine has ceased running due to lack of fuel.
- Maintenance has been performed upon the fuel system components.

1. Sit on the seat, keep your foot off the traction pedal so that it is in NEUTRAL, engage the parking brake, set the engine-speed switch to the MIDDLE position, and ensure that the Enable/Disable switch is in the DISABLE position.
2. Remove your foot from the traction pedal and make sure that the pedal is in the NEUTRAL position.
3. Turn the key to the RUN position.
4. When the glow indicator dims, turn the key to the START position. Release the key immediately when the engine starts and allow it to return to the RUN position. Allow the engine to warm up (without load), then move the throttle control to the desired position.

# Shutting Off the Engine

1. Move all controls to NEUTRAL, engage the parking brake, move the engine-speed switch to the low idle position and allow the engine to reach low idle speed.
2. Turn the key to the OFF position and remove it from the switch.

# Cutting Grass with the Machine

**Note:** Cutting grass at a rate that loads the engine promotes DPF regeneration.

1. Move the machine to the job site and align the machine outside the cutting area for the first cutting pass.
2. Ensure that the PTO switch is set to the DISABLE position.
3. Move the lever for the mow-speed limiter forward.
4. Press the throttle-speed switch to set the engine speed to HIGH IDLE.
5. Use the joystick to lower the cutting units to the ground.
6. Press the PTO switch to prepare cutting units for operation.
7. Use the joystick to raise the cutting units off the ground.
8. Begin moving the machine toward the cutting area and lower the cutting units.

   **Note:** Cutting grass at a rate that loads the engine promotes DPF regeneration.
9. When you complete the mowing pass, use the joystick to lift the cutting units.
10. Perform a tear-shaped turn to quickly line up for your next pass.

# Diesel Particulate Filter Regeneration

The diesel particulate filter (DPF) is part of the exhaust system. The diesel-oxidation catalyst of the DPF reduces harmful gasses and the soot filter removes soot from the engine exhaust.

The DPF regeneration process uses heat from the engine exhaust to incinerate the soot accumulated on the soot filter, converting the soot to ash, and clears the channels of the soot filter so that filtered engine exhaust flows out the DPF.

The engine computer monitors the accumulation of soot by measuring the back pressure in the DPF. If the back pressure is too high, soot is not incinerating in the soot filter through normal engine operation. To keep the DPF clear of soot, remember the following:

- Passive regeneration occurs continuously while the engine is running—run the engine at full engine speed when possible to promote DPF regeneration.
- If the back pressure in the DPF is too high or a reset regeneration has not occurred for 100 hours, the engine computer signals you through the InfoCenter when reset regeneration is running.
- Allow the reset regeneration process to complete before shutting off the engine.

Operate and maintain your machine with the function of the DPF in mind. Engine load at high idle (full throttle) engine speed generally produces adequate exhaust temperature for DPF regeneration.

***Important:*** **Minimize the amount of time that you idle the engine or operate the engine at low-engine speed to help reduce the accumulation of soot in the soot filter.**

## DPF Soot Accumulation

- Over time, the diesel particulate filter accumulates soot in the soot filter. The computer for the engine monitors the soot level in the DPF.
- When enough soot accumulates, the computer informs you that it is time to regenerate the DPF.
- DPF regeneration is a process that heats the DPF to convert the soot to ash.
- In addition to the warning messages, the computer reduces the power produced by the engine at different soot-accumulation levels.

### Engine Warning Messages—Soot Accumulation

| Indication Level | Fault Code | Engine Power Rating | Recommended Action |
|---|---|---|---|
| Level 1: Engine Warning | 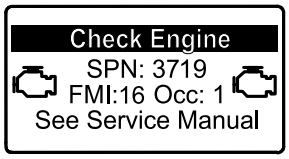 g213866 **Figure 31** Check Engine SPN 3719, FMI 16 | The computer de-rates the engine power to 85%. | Perform a parked regeneration as soon as possible; refer to Servicing the Diesel-Oxidation Catalyst (DOC) and the Soot Filter (page 53). |
| Level 2: Engine Warning | 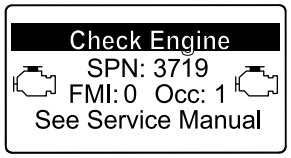 g213867 **Figure 32** Check Engine SPN 3719, FMI 0 | The computer de-rates the engine power to 50%. | Perform a recovery regeneration as soon as possible; refer to Servicing the Diesel-Oxidation Catalyst (DOC) and the Soot Filter (page 53). |

# DPF Ash Accumulation

- The lighter ash is discharged through the exhaust system; the heavier ash collects in the soot filter.
- Ash is a residue of the regeneration process. Over time, the diesel particulate filter accumulates ash that does not discharge with the engine exhaust.
- The computer for the engine calculates the amount of ash accumulated in the DPF.
- When enough ash accumulates, the engine computer sends information to the InfoCenter in the form of an engine fault to indicate the accumulation of ash in the DPF.
- The fault messages indicate that it is time to service the DPF.
- In addition to the warnings, the computer reduces the power produced by the engine at different ash-accumulation levels.

## InfoCenter Advisory and Engine Warning Messages—Ash Accumulation

| Indication Level | Fault Code | Engine Speed Reduction | Engine Power Rating | Recommended Action |
|---|---|---|---|---|
| Level 1: Engine Warning | 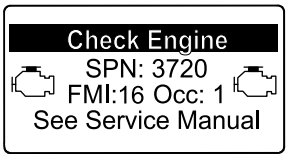<br>g213863<br>**Figure 33**<br>Check Engine SPN 3720, FMI 16 | None | The computer de-rates the engine power to 85%. | Service the DPF; refer to Servicing the Diesel-Oxidation Catalyst (DOC) and the Soot Filter (page 53) |
| Level 2: Engine Warning | 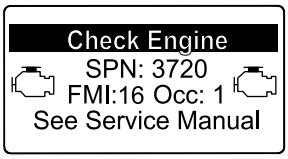<br>g213863<br>**Figure 34**<br>Check Engine SPN 3720, FMI 16 | None | The computer de-rates the engine power to 50%. | Service the DPF; refer to Servicing the Diesel-Oxidation Catalyst (DOC) and the Soot Filter (page 53) |
| Level 3: Engine Warning | 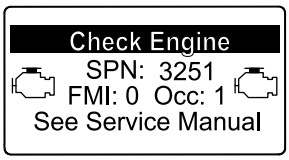<br>g214715<br>**Figure 35**<br>Check Engine SPN 3251, FMI 0 | Engine speed at maximum torque + 200 rpm | The computer de-rates the engine power to 50%. | Service the DPF; refer to Servicing the Diesel-Oxidation Catalyst (DOC) and the Soot Filter (page 53) |

# Types of Diesel Particulate Filter Regeneration

## Types of diesel particulate filter regeneration that are performed while the machine is operating:

| Type of Regeneration | Conditions that cause DPF regeneration | DPF description of operation |
|---|---|---|
| **Passive** | Occurs during normal operation of the machine at high-engine speed or high-engine load | • The InfoCenter does not display an icon indicating passive regeneration.<br>• During passive regeneration, the DPF processes high-heat exhaust gasses, oxidizing harmful emissions, and burning soot to ash.<br>Refer to Passive DPF Regeneration (page 32). |
| **Assist** | Occurs because of low-engine speed, low-engine load, or after the computer detects the DPF is becoming obstructed with soot | • The InfoCenter does not display an icon indicating assist regeneration.<br>• During assist regeneration, the engine computer adjusts the engine settings to raise the exhaust temperature.<br>Refer to Assist DPF Regeneration (page 33). |
| **Reset** | Occurs every 100 hours<br>Also occurs after assist regeneration only if the computer detects that assist regeneration did not sufficiently reduce the soot level | • When the high exhaust-temperature icon  is displayed in the InfoCenter, a regeneration is in progress.<br>• During reset regeneration, the engine computer adjusts the engine settings to raise the exhaust temperature.<br>Refer to Reset Regeneration (page 33). |

## Types of diesel particulate filter regeneration that require you to park the machine:

| Type of Regeneration | Conditions that cause DPF regeneration | DPF description of operation |
|---|---|---|
| **Parked** | Occurs because the computer detects back pressure in the DPF due to soot buildup<br>Also occurs because the operator initiates a parked regeneration<br>May occur because you set the InfoCenter to inhibit reset regeneration and continued operating the machine, adding more soot when the DPF already needs a reset regeneration<br>May result from using the incorrect fuel or engine oil | • When the reset-standby/parked or recovery regeneration icon 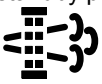 or ADVISORY #188 displays in the InfoCenter, a regeneration is requested.<br>• Perform the parked regeneration as soon as possible to avoid needing a recovery regeneration.<br>• A parked regeneration requires 30 to 60 minutes to complete.<br>• You must have at least a 1/4 tank of fuel in the tank.<br>• You must park the machine to perform a parked regeneration.<br>Refer to Parked or Recovery Regeneration (page 35). |

**Types of diesel particulate filter regeneration that require you to park the machine: (cont'd.)**

| Type of Regeneration | Conditions that cause DPF regeneration | DPF description of operation |
|---|---|---|
| **Recovery** | Occurs because the operator ignored requests for a parked regeneration and continued operating the machine, adding more soot to the DPF | • When the reset-standby/parked or recovery regeneration icon 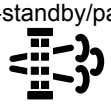 or ADVISORY #190 displays in the InfoCenter, a recovery regeneration is requested.<br>• A recovery regeneration requires up to 3 hours to complete.<br>• You must have at least a 1/2 tank of fuel in the machine.<br>• You must park the machine to perform a recovery regeneration.<br>Refer to Parked or Recovery Regeneration (page 35). |

# Accessing the DPF Regeneration Menus

## Accessing the DPF Regeneration Menus

1. Access the Service menu, press the center button to scroll down to the DPF REGENERATION option (Figure 36).

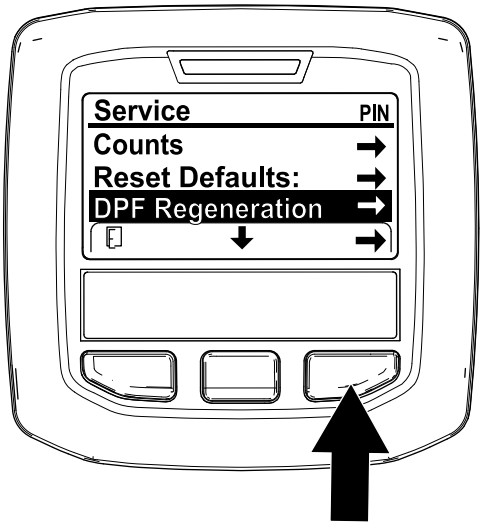


g227667

**Figure 36**

2. Press the right button to select the DPF Regeneration entry (Figure 36).

## Time Since Last Regeneration

Access the DPF Regeneration menu, press the center button to scroll down to the LAST REGEN field (Figure 37).

Use the LAST REGEN field to determine how many hours you have run the engine since the last reset, parked, or recovery regeneration.

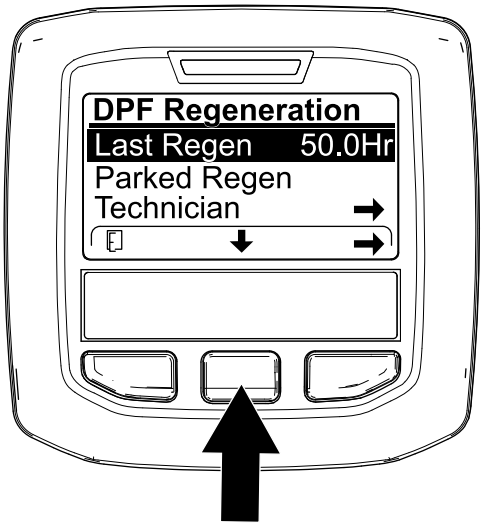


g224693

**Figure 37**

## Technician Menu

***Important:*** **For operating convenience, you may decide to perform a parked regeneration before the soot load reaches 100%, provided the engine has run more than 50 hours since the last successful reset, parked, or recovery regeneration.**

Use the technician menu to view the current state of engine regeneration control and view the reported soot level.

Access the DPF Regeneration menu, press the center button to scroll down to the TECHNICIAN option, and

press the right button to select the Technician entry (Figure 38).

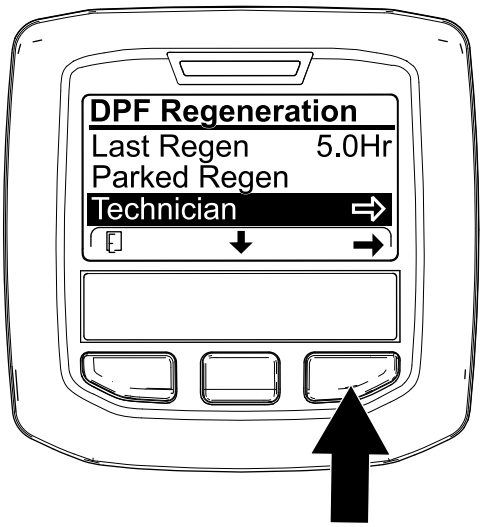


g227348

**Figure 38**

- Use the DPF operation table to understand the current state of DPF operation (Figure 39).

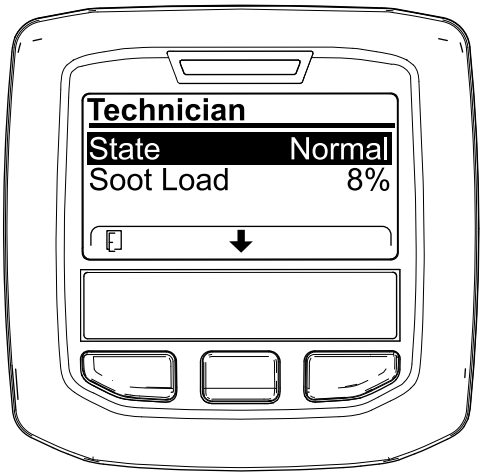


g227360

**Figure 39**

.

## DPF Operation Table

| State | Description | |
|---|---|---|
| Normal | The DPF is in normal-operating mode—passive regeneration. | |
| Assist Regen | The engine computer is performing an assist regeneration. | |
| Reset Stby | The engine computer is trying to run a reset regeneration, but 1 of the following conditions prevents regeneration: | The regen inhibit setting is set to On. |
| | | The exhaust temperature is too low for regeneration. |

## DPF Operation Table (cont'd.)

| State | Description |
|---|---|
| Reset Regen | The engine computer is running a reset regeneration. |
| Parked Stby | The engine computer is requesting that you run a parked regeneration. |
| Parked Regen | You initiated a parked regeneration request and the engine computer is processing the regeneration. |
| Recov. Stby | The engine computer is requesting that you run a recovery regeneration. |
| Recov. Regen | You initiated a recovery regeneration request and the engine computer is processing the regeneration. |

- View the soot load which is measured as the percentage of soot in the DPF(Figure 40); refer to the soot-load table.

  **Note:** The soot load value varies as the machine is operated and DPF regeneration occurs.

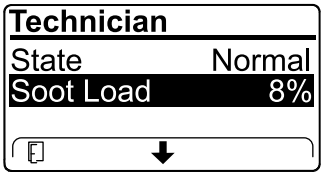


g227359

**Figure 40**

## Soot-Load Table

| Important Soot Load Values | Regeneration State |
|---|---|
| 0% to 5% | Minimum soot load range |
| 78% | The engine computer performs an assist regeneration. |
| 100% | The engine computer automatically requests a parked regeneration. |
| 122% | The engine computer automatically requests a recovery regeneration. |

# Passive DPF Regeneration

- Passive regeneration occurs as part of normal engine operation.
- While operating the machine, run the engine at full-engine speed and high load when possible to promote DPF regeneration.

## Assist DPF Regeneration

- The engine computer adjusts engine settings to raise the exhaust temperature.
- While operating the machine, run the engine at full engine speed and high load when possible to promote DPF regeneration.

## Reset Regeneration

**⚠ CAUTION**

**The exhaust temperature is hot (approximately 600°C (1,112°F) during DPF regeneration. Hot exhaust gas can harm you or other people.**

- **Never operate the engine in an enclosed area.**
- **Make sure that there are no flammable materials around the exhaust system.**
- **Never touch a hot exhaust system component.**
- **Never stand near or around the exhaust pipe of the machine.**

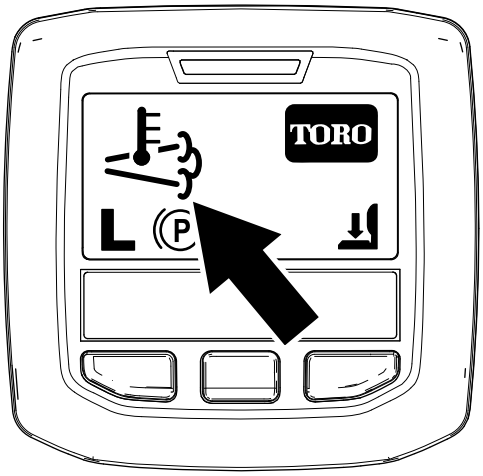


g224417

**Figure 41**

- The high exhaust-temperature icon  displays in the InfoCenter (Figure 41).
- The engine computer adjusts engine settings to raise the exhaust temperature.

  ***Important:*** **The high exhaust-temperature icon indicates that the exhaust temperature discharged from of your machine may be hotter than during regular operation.**
- While operating the machine, run the engine at full engine speed and high load when possible to promote DPF regeneration.
- The icon displays in the InfoCenter while the reset regeneration is processing.
- Whenever possible, do not shut off the engine or reduce engine speed while the reset regeneration is processing.

  ***Important:*** **Whenever possible, allow the machine to complete the reset regeneration process before shutting off the engine.**

### Periodic Reset Regeneration

If the engine has not completed a successful Reset, Parked, or Recovery regeneration in the previous 100 hours of engine operation, the engine computer will attempt to perform a reset regeneration.

### Setting the Inhibit Regen

**Reset Regeneration Only**

**Note:** If you set the InfoCenter to inhibit regeneration, the InfoCenter displays ADVISORY #185 (Figure 42) every 15 minutes while the engine requests a reset regeneration.

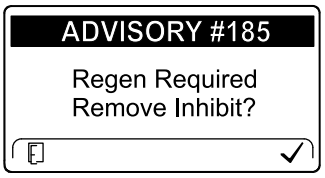


g224692

**Figure 42**

A reset regeneration produces the elevated engine exhaust. If you are operating the machine around trees, brush, tall grass, or other temperature-sensitive plants or materials, you can use the Inhibit Regen setting to prevent the engine computer from performing a reset regeneration.

***Important:*** **When you shut off the engine and start it again, the inhibit regen setting defaults to OFF.**

1. Access the DPF Regeneration menu, press the center button to scroll down to the INHIBIT REGEN option, and press the right button to select the Inhibit Regen entry (Figure 43).

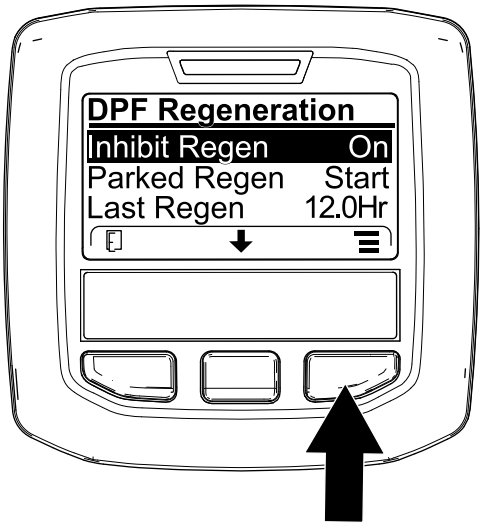


g227304

**Figure 43**

2. Press the right button to change the inhibit regeneration setting from On to Off (Figure 43) or from Off to On (Figure 44).

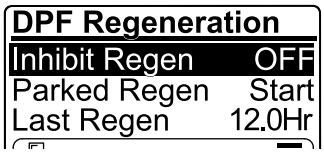


g224691

**Figure 44**

### Allowing a Reset Regeneration

The InfoCenter displays the high exhaust-temperature icon when the reset regeneration is in process.

**Note:** If INHIBIT REGEN is set to ON, the InfoCenter displays ADVISORY #185 (Figure 45). Press button 3 to set inhibit regeneration setting to OFF and continue with the reset regeneration.

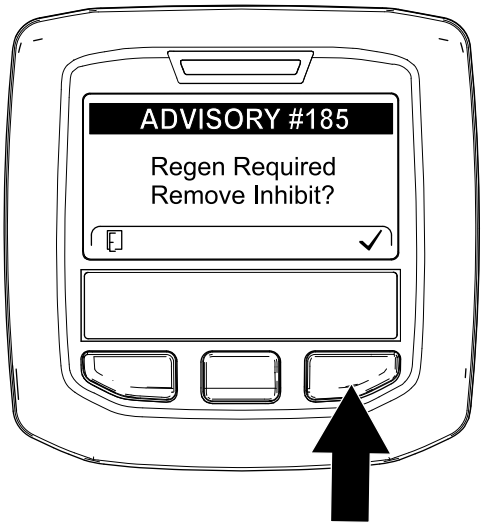


g224394

**Figure 45**

**Note:** If the engine exhaust temperature is too low, the InfoCenter displays ADVISORY #186 (Figure 46) to inform you to set the engine to full throttle (high idle).

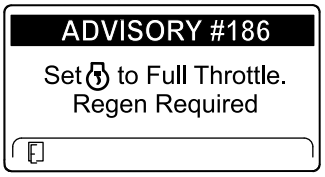


g224395

**Figure 46**

**Note:** When the reset regeneration completes, the high exhaust-temperature disappears from the InfoCenter screen.

# Parked or Recovery Regeneration

- When the engine computer requests either a parked regeneration or a recovery regeneration, the regeneration request icon (Figure 47) displays in the InfoCenter.

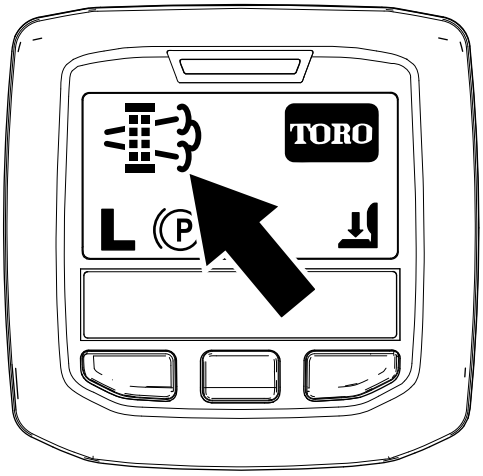


g224404

**Figure 47**

- The machine does not automatically perform a parked regeneration or a recovery regeneration, you must run the regeneration through the InfoCenter.

## Parked Regeneration Messages

When a parked regeneration is requested by the engine computer the following messages display in the InfoCenter:

- Engine warning SPN 3720, FMI 16 (Figure 48)

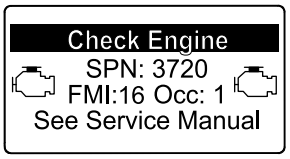


g213863

**Figure 48**

- Parked regeneration required ADVISORY #188 (Figure 49)

  **Note:** Advisory #188 displays every 15 minutes.

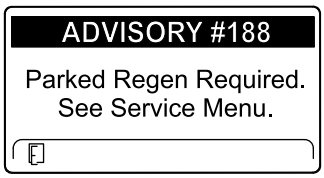


g224397

**Figure 49**

- If you do not perform a parked regeneration within 2 hours, the InfoCenter displays parked regeneration required—power takeoff disabled ADVISORY #189 (Figure 50).

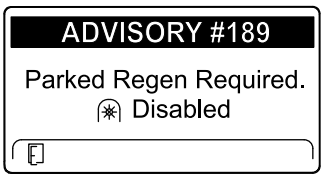


g224398

**Figure 50**

***Important:*** **Perform a parked regeneration to restore the PTO function; refer to Preparing to Perform a Parked or Recovery Regeneration (page 36) and Performing a Parked or Recovery Regeneration (page 36).**

**Note:** The Home screen displays the PTO disabled Icon (Figure 51).

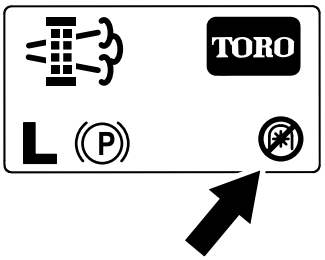


g224415

**Figure 51**

## Recovery Regeneration Messages

When a recovery regeneration is requested by the engine computer, the following messages display in the InfoCenter:

- Engine warning SPN 3719, FMI 0 (Figure 52)

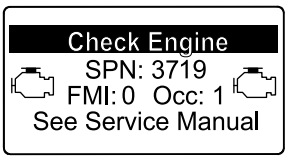


g213867

**Figure 52**

- Recovery regeneration required—power takeoff disabled ADVISORY #190 (Figure 53)

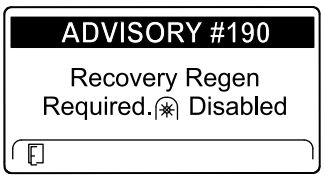


g224399

**Figure 53**

***Important:*** **Perform a recovery regeneration to restore the PTO function; refer to Preparing to Perform a Parked or Recovery Regeneration (page 36) and Performing a Parked or Recovery Regeneration (page 36).**

**Note:** The Home screen displays the PTO disabled Icon; refer to Figure 51 in Parked Regeneration Messages (page 35).

### DPF Status-Limitation

- If the engine computer requests a recovery regeneration or is processing a recovery regeneration and you scroll down to the PARKED REGEN option, parked regeneration locks and the lock icon (Figure 54) appears in the lower right corner of the InfoCenter.

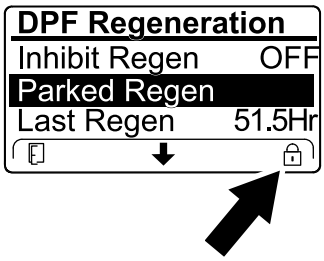


g224625

**Figure 54**

- If the engine computer has not requested a recovery regeneration and you scroll down to the RECOVERY REGEN option, the recovery regeneration locks and the lock icon (Figure 55) appears in the lower right corner of the InfoCenter.

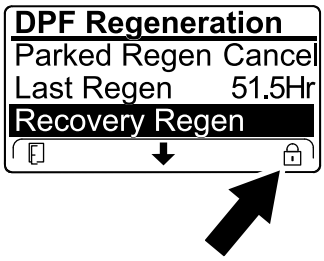


g224628

**Figure 55**

### Preparing to Perform a Parked or Recovery Regeneration

1. Ensure that the machine has fuel in the tank for the type of regeneration you are performing:
   - **Parked Regeneration:** Ensure that you have 1/4 tank of fuel before performing the parked regeneration.
   - **Recovery Regeneration:** Ensure that you have 1/2 tank of fuel before performing the recovery regeneration.
2. Move the machine outside to an area away from combustible materials.
3. Park the machine on a level surface.
4. Ensure that the traction control or motion-control levers are in the NEUTRAL position.
5. If applicable, shut off the PTO, and lower the cutting units or accessories.
6. Engage the parking brake.
7. Set the throttle to the low IDLE position.

### Performing a Parked or Recovery Regeneration

**⚠ CAUTION**

**The exhaust temperature is hot (approximately 600°C (1,112°F) during DPF regeneration. Hot exhaust gas can harm you or other people.**

- **Never operate the engine in an enclosed area.**
- **Make sure that there are no flammable materials around the exhaust system.**
- **Never touch a hot exhaust system component.**
- **Never stand near or around the exhaust pipe of the machine.**

***Important:*** **The computer of the machine cancels DPF regeneration if you increase the engine speed from low idle or release the parking brake.**

1. Access the DPF Regeneration menu, press the center button to scroll down to either the PARKED REGEN START option or the RECOVERY REGEN START option (Figure 56), and press the right button to select the start the regeneration (Figure 56).

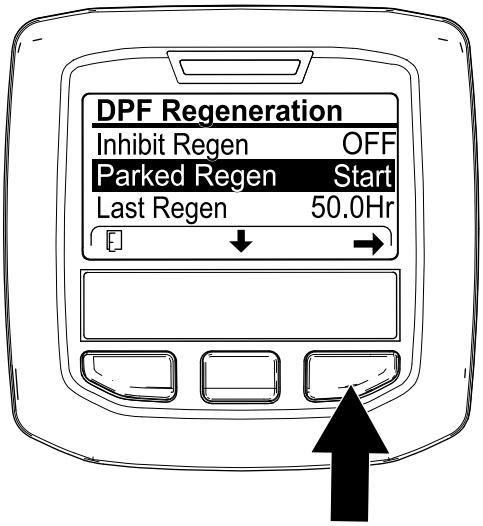


g224402

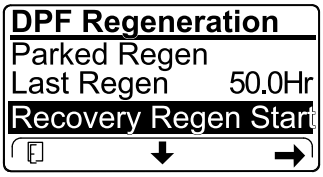


g224629

**Figure 56**

2. At the VERIFY FUEL LEVEL screen, verify that you have 1/4 tank of fuel if you are performing the parked regeneration or 1/2 tank of fuel if you are performing the recovery regeneration, and press the right button to continue (Figure 57).

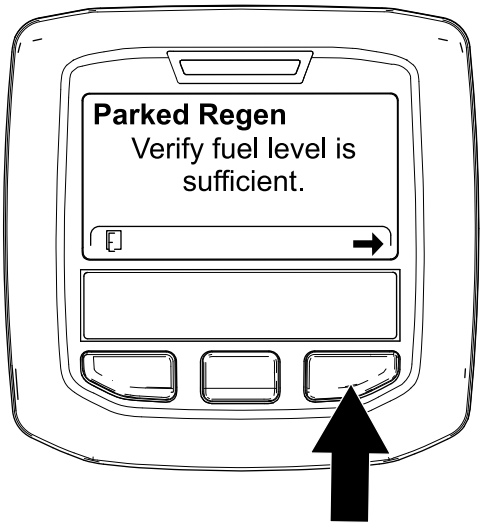


g224414

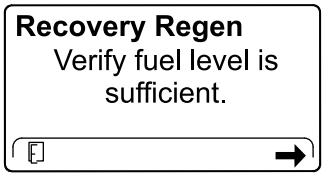


g227678

**Figure 57**

3. At the DPF checklist screen, verify that the parking brake is engaged and that the engine speed is set to low idle (Figure 58).

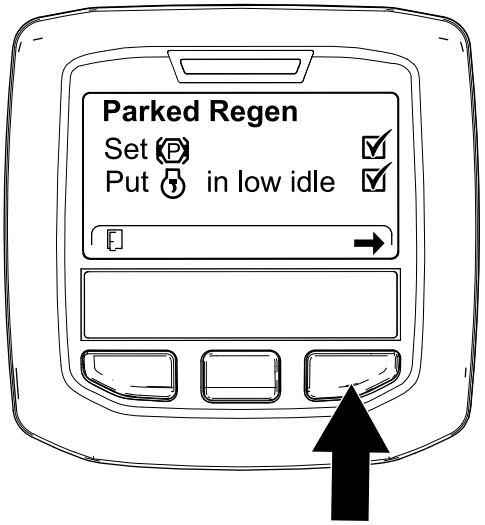


g224407

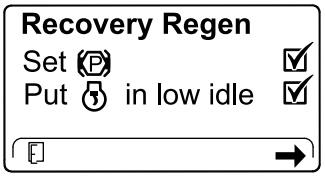


g227679

**Figure 58**

4. At the INITIATE DPF REGEN screen, press the right button to continue (Figure 59).

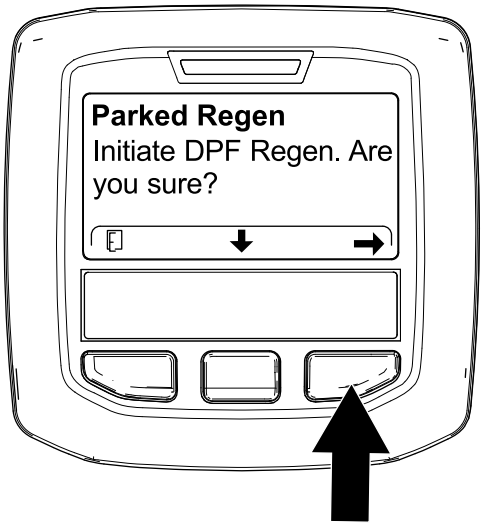


g224626

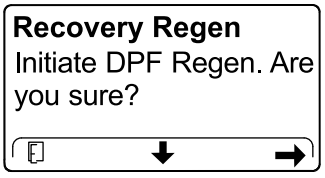


g224630

**Figure 59**

5. The InfoCenter displays the INITIATING DPF REGEN message (Figure 60).

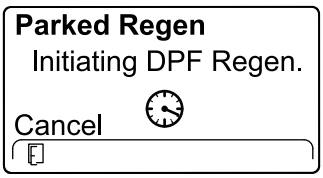


g224411

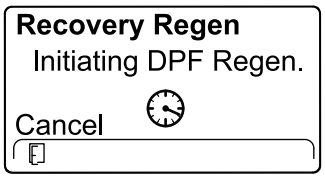


g227681

**Figure 60**

6. The InfoCenter displays the time to complete message (Figure 61).

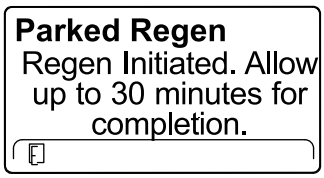


g224406

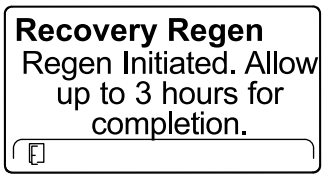


g224416

**Figure 61**

7. The engine computer checks the engine state and fault information. The InfoCenter may display the following messages found in the table that follows:

## Check Message and Corrective Action Table

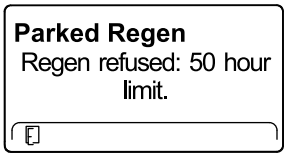


**Corrective Action:** Exit the regeneration menu and run the machine until the time since last regeneration is greater than 50 hours; refer to Time Since Last Regeneration (page 31).

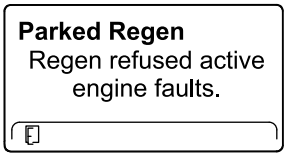


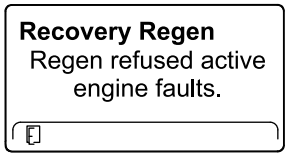


**Corrective Action:** Troubleshoot the engine fault and retry DPF regeneration.

## Check Message and Corrective Action Table (cont'd.)

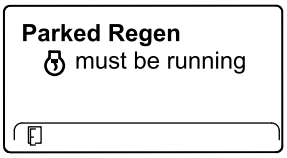


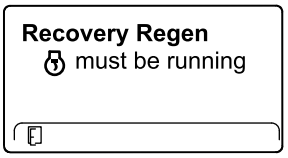


**Corrective Action:** Start and run the engine.

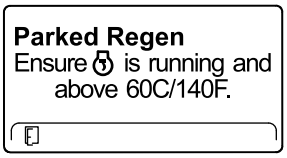


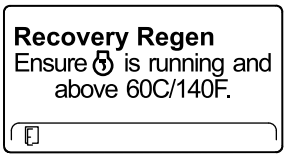


**Corrective Action:** Run the engine to warm the coolant temperature to 60°C (140°F).

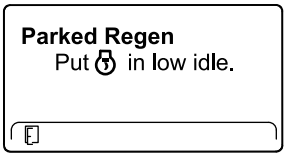


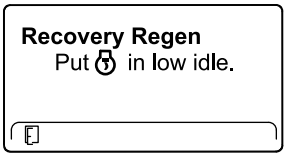


**Corrective Action:** Change the engine speed to low idle.

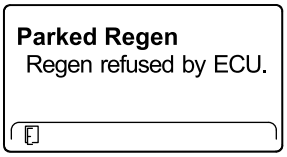


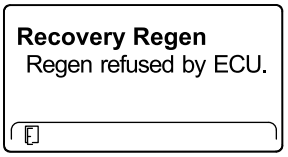


**Corrective Action:** Troubleshoot the engine computer condition and retry DPF regeneration.

8. The InfoCenter displays the home screen and the regeneration acknowledge icon (Figure 62) appears in the lower right corner of the screen as the regeneration processes.

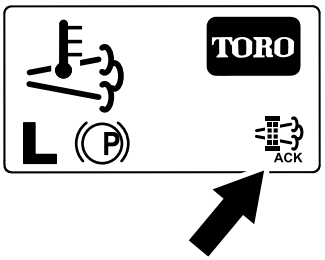


g224403

**Figure 62**

**Note:** While the DPF regeneration runs, the InfoCenter displays the high exhaust-temperature icon .

9. When the engine computer completes a parked or recovery regeneration, the InfoCenter

displays ADVISORY #183 (Figure 63). Press the left button to exit to the home screen.

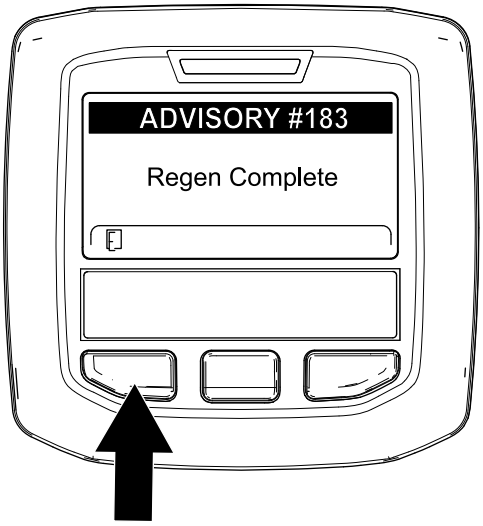


g224392

**Figure 63**

**Note:** If the regeneration fails to complete, the InfoCenter displays Advisory #184 (Figure 63). Press the left button to exit to the home screen.

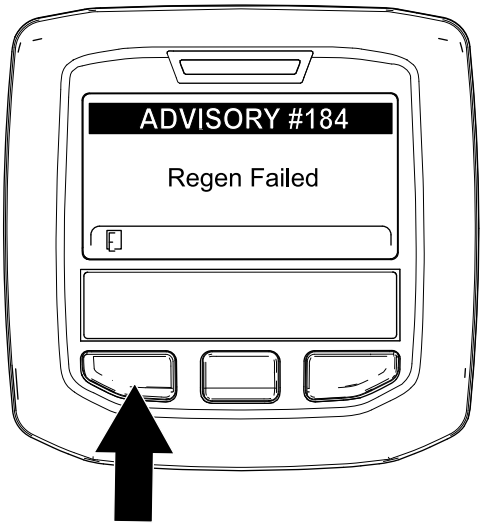


g224393

**Figure 64**

### Canceling a Parked or Recovery Regeneration

Use the Parked Regen Cancel or Recovery Regen Cancel setting to cancel a running parked or recovery regeneration process.

1. Access the DPF Regeneration menu (Figure 65).

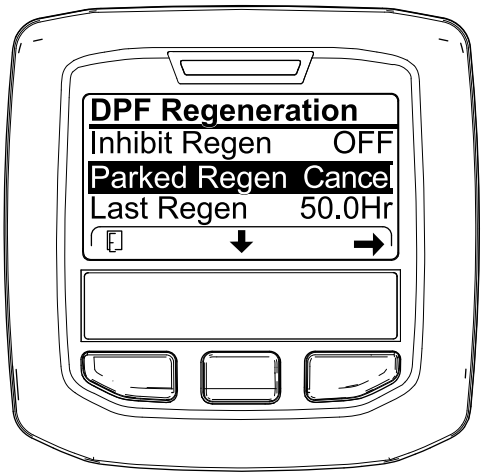


g227305

**Figure 65**

2. Press the center button to scroll down to the PARKED REGEN CANCEL (Figure 65) or the RECOVERY REGEN CANCEL option (Figure 66).




g227306

**Figure 66**

3. Press the right button to select the Regen Cancel entry (Figure 65 or Figure 66).

# Adjusting the Lift-Arm Counterbalance

You can adjust the counterbalance on the rear cutting-unit lift arms to compensate for different turf conditions and to maintain a uniform height of cut in the rough conditions or in areas of thatch buildup.

You can adjust each counterbalance spring to 1 of 4 settings. Each increment increases or decreases counterbalance on the cutting unit by 2.3 kg (5 lb). You can position the springs on the back side of the first spring actuator to remove all counter balance (fourth position).

1. Park the machine on a level surface, lower the cutting units, engage the parking brake, shut off the engine, and remove the key.
2. Insert a tube or similar object onto the long spring end and pivot it around the spring actuator to the desired position (Figure 67).

**⚠ CAUTION**

**The springs are under tension and could cause personal injury.**

**Use caution when adjusting the springs.**

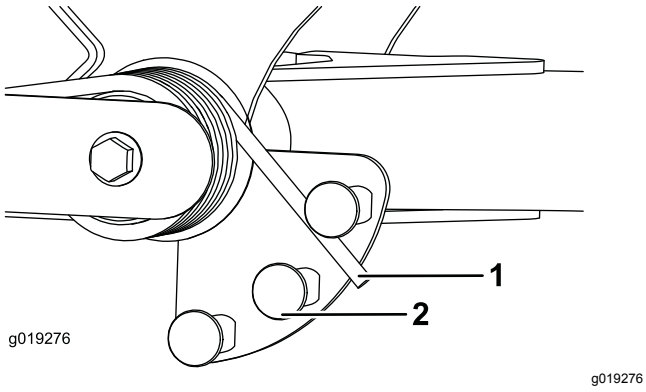


**Figure 67**

1. Spring
2. Spring actuator

3. Repeat the procedure on the other spring.

# Adjusting the Lift-Arm Turnaround Position

1. Park the machine on a level surface, lower the cutting units, engage the parking brake, shut off the engine, and remove the key.
2. The lift-arm switch is located underneath the hydraulic tank behind the front, right lift arm (Figure 68).
3. Loosen the switch-mounting screws and move the switch down to increase the lift-arm turnaround height or move the switch up to decrease the lift-arm turnaround height (Figure 68).

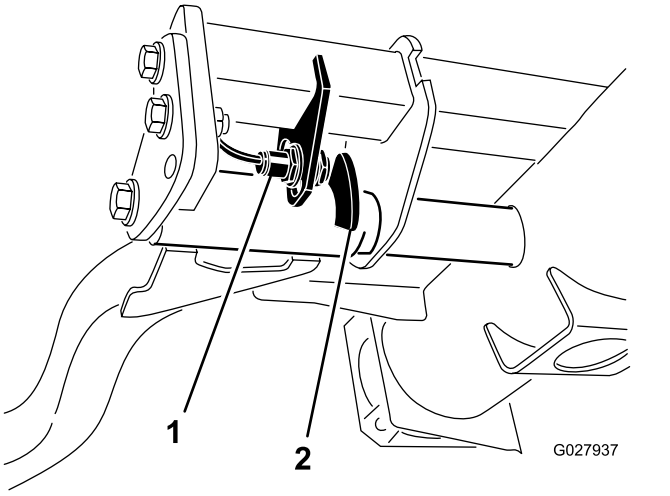


**Figure 68**

1. Switch
2. Lift-arm sensing device

4. Tighten the mounting screws.

# Setting the Reel Speed

To achieve a consistent, high quality of cut and a uniform after-cut appearance, it is important that you set the reel speed to the proper setting. Adjust the reel speed as follows:

1. In the InfoCenter, under the settings menu, enter the blade count, mow speed, and HOC to calculate the proper reel speed.
2. If further adjustments are required, in the settings menu, scroll down to the F Reel RPM, R Reel RPM, or both.
3. Press the right button to change the reel-speed value.

   **Note:** As you change the speed setting, the display continues to show the calculated reel speed based on blade count, mow speed and HOC, but the new value is also be displayed.

   **Note:** You may need to increase or decrease the reel speed to compensate for varying turf conditions.

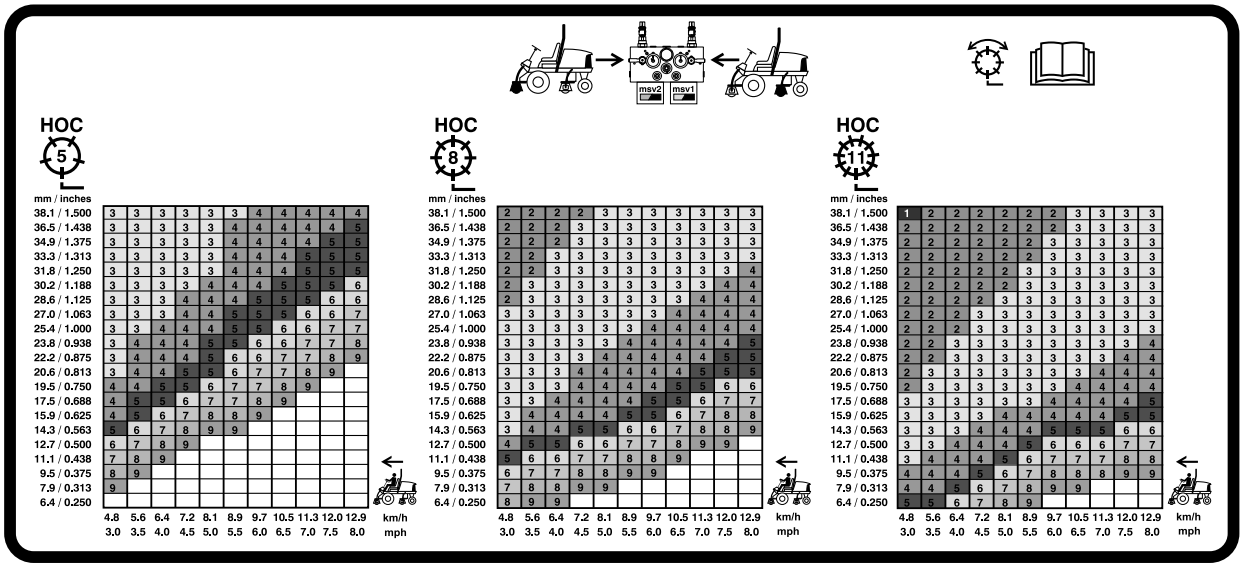


G031995

g031995

**Figure 69**

5 inch (127 mm) Reel Speed Chart

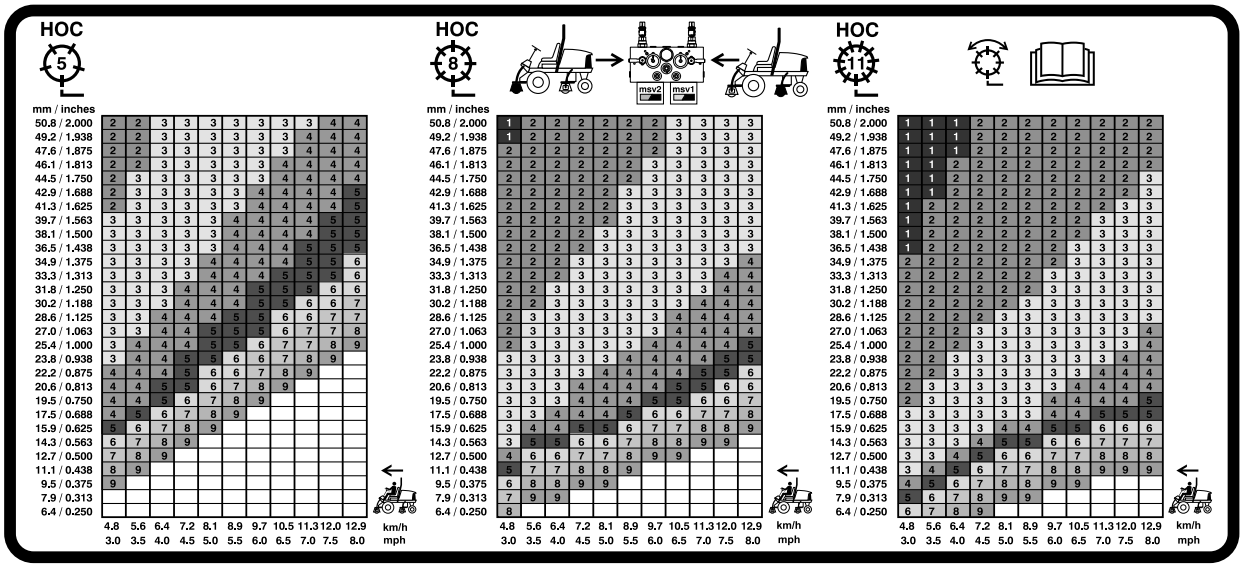


G031996

g031996

**Figure 70**

7 inch (177.8 mm) Reel Speed Chart

# Understanding the Diagnostic Light

The machine is equipped with a diagnostic light, which indicates if the machine detects a malfunction. The diagnostic light is located on the InfoCenter, above the display screen (Figure 71). When the machine is functioning properly and the key switch is moved to the ON/RUN position, the diagnostic light turns on briefly to indicate that the light is working properly. When a machine advisory message appears, the light illuminates when the message is present. When a fault message appears, the light blinks until the fault is resolved.

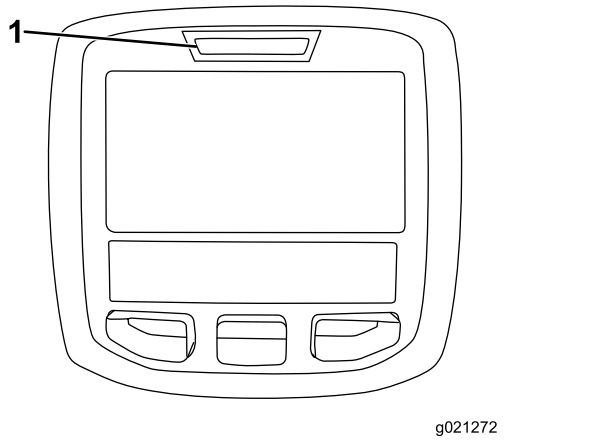


g021272

**Figure 71**

1. Diagnostic light

# Checking the Interlock Switches

The purpose of the interlock switches is to prevent the engine from cranking or starting unless the traction pedal is in the NEUTRAL position, the Enable/Disable switch is in the DISABLE position, and the Lower Mow/Raise control is in the NEUTRAL position. In addition, the engine should stop when you press the traction pedal while you are off the seat or if the parking brake is engaged.

**⚠ CAUTION**

**If the safety-interlock switches are disconnected or damaged, the machine could operate unexpectedly, causing personal injury.**

- **Do not tamper with the interlock switches.**
- **Check the operation of the interlock switches daily and replace any damaged switches before operating the machine.**

## Verifying the Interlock-Switch Function

**Service Interval:** Before each use or daily

1. Park the machine on a level surface, lower the cutting units, engage the parking brake, shut off the engine, and remove the key.
2. Turn the key to the ON position, but do not start the machine.
3. Locate the appropriate switch function in the diagnostics menu on the InfoCenter.
4. Individually, change each of the switches from open to closed (i.e., sit on seat, engage traction pedal, etc.), and note that the appropriate state of the switch changes.

   **Note:** Repeat this for all switches that you can change by hand.
5. If a switch is closed and the appropriate indicator does not change, check all wiring and connections to the switch and/or check the switches with an ohm meter.

   **Note:** Replace any faulty switches and repair any faulty wiring.

**Note:** The InfoCenter display also can detect which output solenoids or relays are turned on. This is a quick way to determine if a machine malfunction is electrical or hydraulic.

## Verifying the Output Function

1. Park the machine on a level surface, lower the cutting units, engage the parking brake, shut off the engine, and remove the key.
2. Turn the key to the ON position and start the machine.
3. Locate the appropriate output function in the diagnostics menu on the InfoCenter.
4. Sit on the seat and attempt to operate the desired function of the machine.

**Note:** The appropriate outputs should change state to indicate that the ECM is turning on that function.

If the correct outputs do not illuminate, verify that the required input switches are in the necessary positions to allow that function to occur. Verify the correct switch function.

If the output displays are on as specified, but the machine does not function properly, this indicates a non-electrical problem. Repair the machine as necessary.

# Operating Tips

## Becoming Familiarized with the Machine

Before mowing grass, practice operating the machine in an open area. Start and shut off the engine. Operate in forward and reverse. Lower and raise the cutting units and engage and disengage the reels. When you feel familiar with the machine, practice operating up and down slopes at different speeds.

## Understanding the Warning System

If a warning light comes on during operation, stop the machine immediately and correct the problem before continuing operation. Serious damage could occur if you operate the machine with a malfunction.

## Mowing

Start the engine and move the engine-speed switch to the FAST position. Move the Enable/Disable switch to the ENABLE position and use the Lower Mow/Raise lever to control the cutting units (the front cutting units are timed to lower before the rear cutting units). To move forward and cut grass, press the traction pedal forward.

## Transporting the Machine

Move the Enable/Disable switch to the DISABLE position and raise the cutting units to the TRANSPORT position. Move the Mow/Transport lever to the TRANSPORT position. Be careful when driving between objects so you do not accidentally damage the machine or cutting units. Use extra care when operating the machine on slopes. Drive slowly and avoid sharp turns on slopes to prevent rollovers. Lower the cutting units when going downhill for steering control.

# *After Operation*

# After Operation Safety

## General Safety

- Shut off the engine, remove the key, and wait for all movement to stop before you leave the operator's position. Allow the machine to cool before adjusting, servicing, cleaning, or storing it.
- Clean grass and debris from the cutting units, drives, mufflers, cooling screens, and engine compartment to help prevent fires. Clean up oil or fuel spills.
- Shut off the fuel while storing or hauling the machine.
- Disengage the drive to the attachment whenever you are hauling or not using the machine.
- Maintain and clean the seat belt(s) as necessary.
- Do not store the machine or fuel container where there is an open flame, spark, or pilot light, such as on a water heater or on other appliances.

# Hauling the Machine

- Use full-width ramps for loading the machine onto a trailer or truck.
- Tie the machine down securely.

# Identifying the Tie-Down Points

- Front—the hole in the rectangular pad, under the axle tube, inside each front tire (Figure 72)

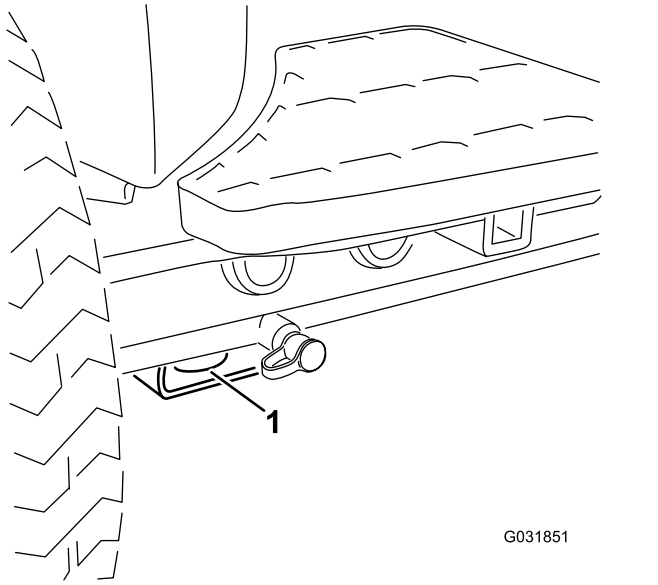


**Figure 72**

1. Front tie-down

- Rear—each side of the machine on the rear frame (Figure 73)

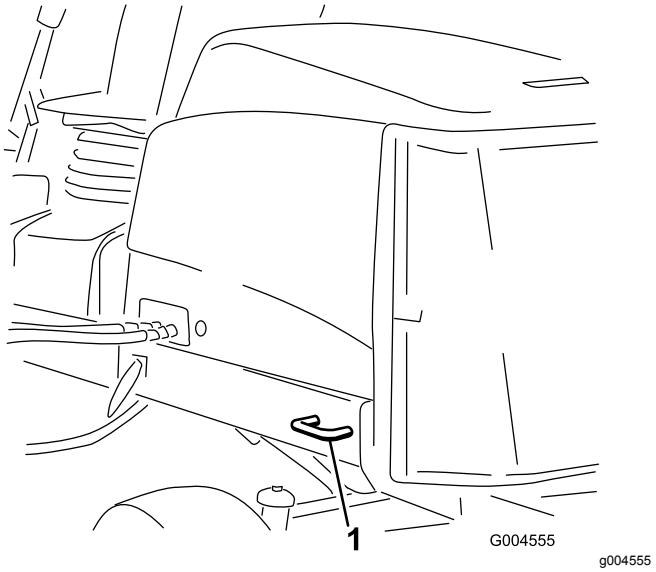


**Figure 73**

1. Rear tie-down

# Jacking Points

**Note:** Use jack stands to support the machine when required.

- Front—rectangular pad, under the axle tube, inside each front tire (Figure 74).

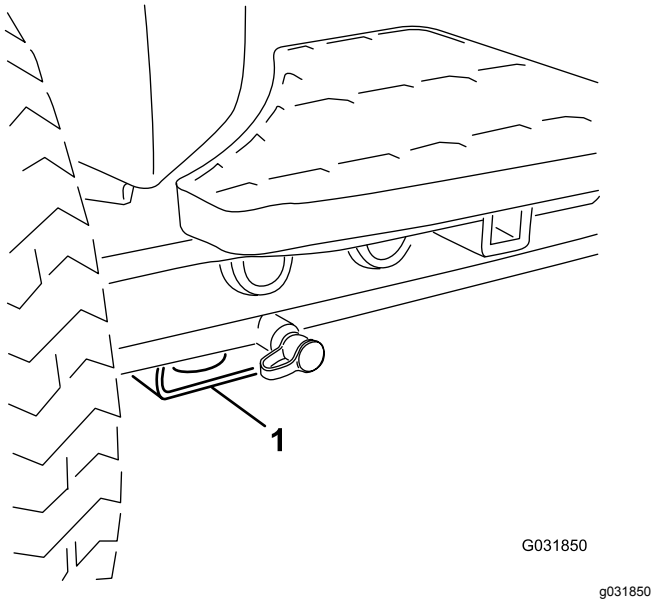


**Figure 74**

1. Front jacking point

- Rear—rectangular axle tube on the rear axle.

# Pushing or Towing the Machine

In an emergency, you can move the machine by actuating the bypass valve in the variable displacement hydraulic pump and pushing or towing the machine.

***Important:*** **Do not push or tow the machine faster than 3 to 4.8 km/h (2 to 3 mph) because internal transmission damage may occur. The bypass valve must be open whenever you push or tow the machine.**

1. Rotate the bypass-valve bolt 1-1/2 turns to open and allow oil to bypass internally (Figure 75).

   **Note:** The bypass valve is located on the left side of the hydrostat. By bypassing the fluid, you can move the machine slowly without damaging the transmission.

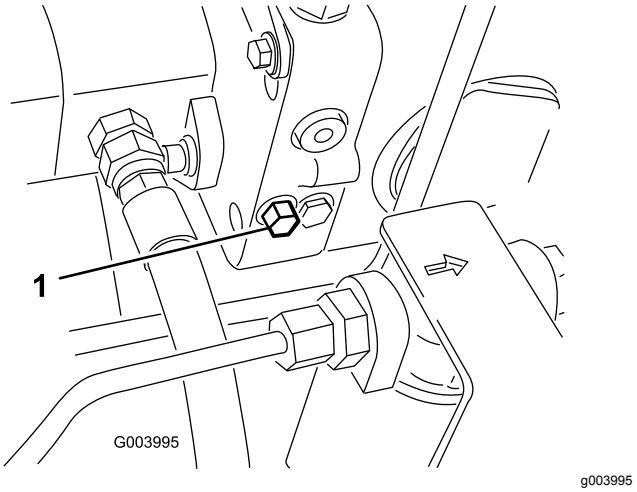


**Figure 75**

1. Bypass-valve bolt

2. Close the bypass valve before starting the engine. However, do not exceed 7 to 11 N·m (5 to 8 ft-lb) torque to close the valve.

   ***Important:*** **Running the engine with the bypass valve open causes the transmission to overheat.**

# Hydraulic-Valve Solenoid Functions

Use the list below to identify and describe the different functions of the solenoids in the hydraulic manifold. Each solenoid must be energized to allow the function to occur.

| Solenoid | Function |
|---|---|
| SP2 | Front reel circuit |

| | |
|---|---|
| SP1 | Rear reel circuit |
| SVRV | Lift/lower cutting units |
| SV1 | Lift/lower front cutting units |
| SV3 | Lift/lower rear cutting units |
| SV2 | Raise any cutting units |

# Maintenance

**Note:** Determine the left and right sides of the machine from the normal operating position.

## Maintenance Safety

- Before you leave the operator's position, do the following:
  - Park the machine on a level surface.
  - Disengage the cutting unit(s) and lower the attachments.
  - Engage the parking brake.
  - Shut off the engine and remove the key.
  - Wait for all movement to stop.
- Allow machine components to cool before performing maintenance.
- If possible, do not perform maintenance while the engine is running. Keep away from moving parts.
- Support the machine with jack stands whenever you work under the machine.
- Carefully release pressure from components with stored energy.
- Keep all parts of the machine in good working condition and all hardware tightened.
- Replace all worn or damaged decals.
- To ensure safe, optimal performance of the machine, use only genuine Toro replacement parts. Replacement parts made by other manufacturers could be dangerous, and such use could void the product warranty.

## Recommended Maintenance Schedule(s)

| Maintenance Service Interval | Maintenance Procedure |
|---|---|
| After the first hour | • Torque the wheel lug nuts to 94 to 122 N·m (70 to 90 ft-lb). |
| After the first 10 hours | • Torque the wheel lug nuts to 94 to 122 N·m (70 to 90 ft-lb).<br>• Check the alternator-belt tension. |
| Before each use or daily | • Inspect the seat belt(s) for wear, cuts, and other damage. Replace the seat belt(s) if any component does not operate properly.<br>• Check the operation of the interlock switches.<br>• Check the level of the engine oil.<br>• Drain water or other contaminants from water separator.<br>• Check the tire pressure.<br>• Check the cooling system.<br>• Remove debris from the screen and radiator/oil cooler. (More frequently in dirty operating conditions).<br>• Check the hydraulic lines and hoses.<br>• Check the hydraulic-fluid level.<br>• Check the reel-to-bedknife contact. |
| Every 50 hours | • Grease the bearings and bushings (and immediately after every washing).<br>• Clean the battery and check the condition of it (or weekly, whichever comes first).<br>• Check the battery-cable connections. |
| Every 100 hours | • Inspect the cooling-system hoses.<br>• Check the alternator-belt tension. |
| Every 250 hours | • Change the engine oil and filter.<br>• Torque the wheel lug nuts to 94 to 122 N·m (70 to 90 ft-lb). |
| Every 400 hours | • Service the air cleaner. (more frequently in extremely dirty or dusty conditions). Service the air cleaner earlier if the air-cleaner indicator shows red.<br>• Replace the fuel-filter canister.<br>• Replace the engine fuel filter.<br>• Check the fuel lines and connections for deterioration, damage, or loose connections (or yearly, whichever comes first). |

| Maintenance Service Interval | Maintenance Procedure |
|---|---|
| Every 800 hours | • Check the rear wheel toe-in.<br>• If you are not using the recommended hydraulic fluid or have ever filled the reservoir with an alternative fluid, change the hydraulic fluid.<br>• If you are not using the recommended hydraulic fluid or have ever filled the reservoir with an alternative fluid, replace the hydraulic filters.<br>• Pack the rear wheel bearings. |
| Every 1,000 hours | • If you are using the recommended hydraulic fluid, replace the hydraulic filters. |
| Every 2,000 hours | • If you are using the recommended hydraulic fluid, change the hydraulic fluid. |
| Every 6,000 hours | • Disassemble, clean, and assemble the soot filter of the DPF or clean the soot filter if engine faults SPN 3251 FMI 0, SPN 3720 FMI 0, or SPN 3720 FMI 16 display in the InfoCenter. |
| Every 2 years | • Flush and replace the cooling-system fluid.<br>• Replace all moving hoses. |

# Daily Maintenance Checklist

Duplicate this page for routine use.

| Maintenance Check Item | For the week of: Mon. | Tues. | Wed. | Thurs. | Fri. | Sat. | Sun. |
|---|---|---|---|---|---|---|---|
| Check the safety interlock operation. | | | | | | | |
| Check the brake operation. | | | | | | | |
| Check the engine oil and fuel level. | | | | | | | |
| Drain the water/fuel separator. | | | | | | | |
| Check the air filter restriction indicator. | | | | | | | |
| Check the radiator and screen for debris. | | | | | | | |
| Check unusual engine noises.[1] | | | | | | | |
| Check unusual operating noises. | | | | | | | |
| Check the hydraulic system fluid level. | | | | | | | |
| Check the hydraulic filter indicator. [2] | | | | | | | |
| Check hydraulic hoses for damage. | | | | | | | |
| Check for fluid leaks. | | | | | | | |
| Check the tire pressure. | | | | | | | |
| Check the instrument operation. | | | | | | | |
| Check the reel-to-bedknife adjustment. | | | | | | | |
| Check the height-of-cut adjustment. | | | | | | | |
| Check all grease fittings for lubrication.[3] | | | | | | | |
| Touch-up damaged paint. | | | | | | | |
| Wash the machine. | | | | | | | |

1. Check the glow plug and injector nozzles if hard starting, excess smoke, or rough running is noted.
2. Check with the engine running and the oil at operating temperature
3. Immediately after every washing, regardless of the interval listed

# Notation for Areas of Concern

| Inspection performed by: | | |
|---|---|---|
| **Item** | **Date** | **Information** |
| 1 | | |
| 2 | | |
| 3 | | |
| 4 | | |
| 5 | | |
| 6 | | |
| 7 | | |
| 8 | | |

***Important:*** **Refer to your engine owner's manual and cutting unit *Operator's Manual* for additional maintenance procedures.**

**Note:** Download a free copy of the electrical or hydraulic schematic by visiting www.Toro.com and searching for your machine from the Manuals link on the home page.

# Greasing the Bearings and Bushings

**Service Interval:** Every 50 hours (and immediately after every washing).

Lubricate all grease fittings for the bearings and bushings with No. 2 lithium grease.

The grease fitting locations and quantities are as follows:

- Pump driveshaft (3) (Figure 76)

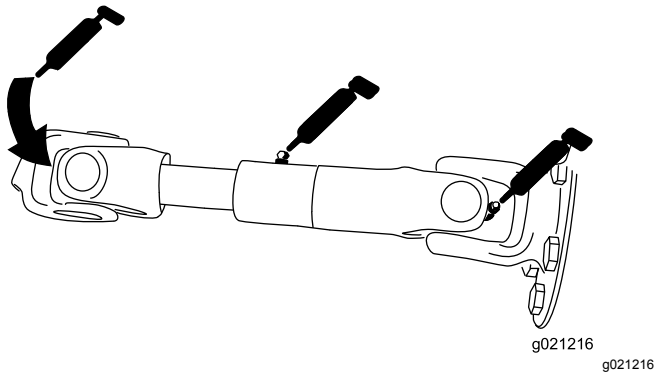


**Figure 76**

- Cutting-unit lift-arm cylinders (2 each) (Figure 77)

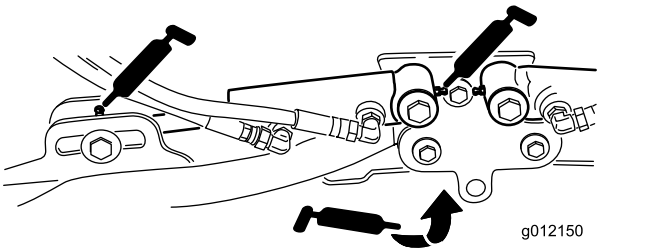


**Figure 77**

- Lift-arm pivots (1 each) (Figure 77)
- Cutting-unit carrier-frame and pivot (2 each) (Figure 78)

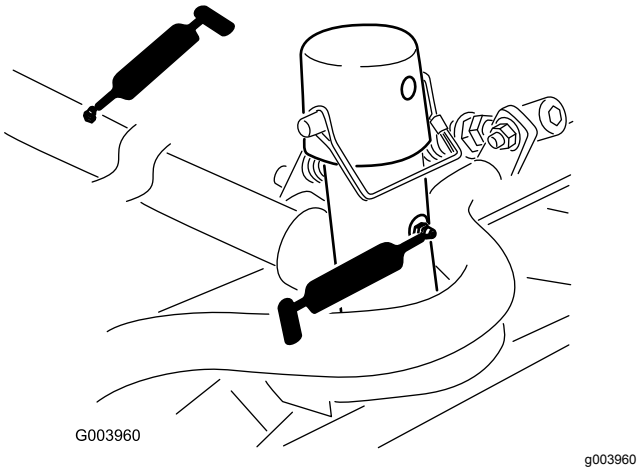


**Figure 78**

- Lift-arm-pivot shaft (1 each) (Figure 79)

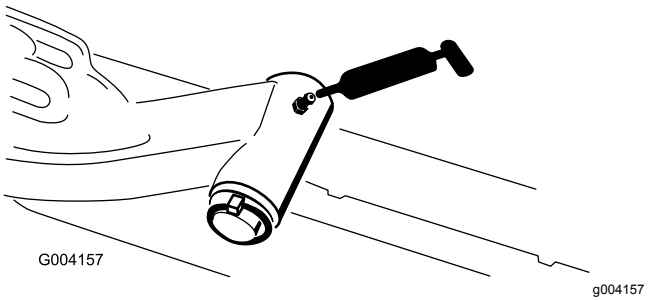


**Figure 79**

- Rear axle tie rod (2) (Figure 80)

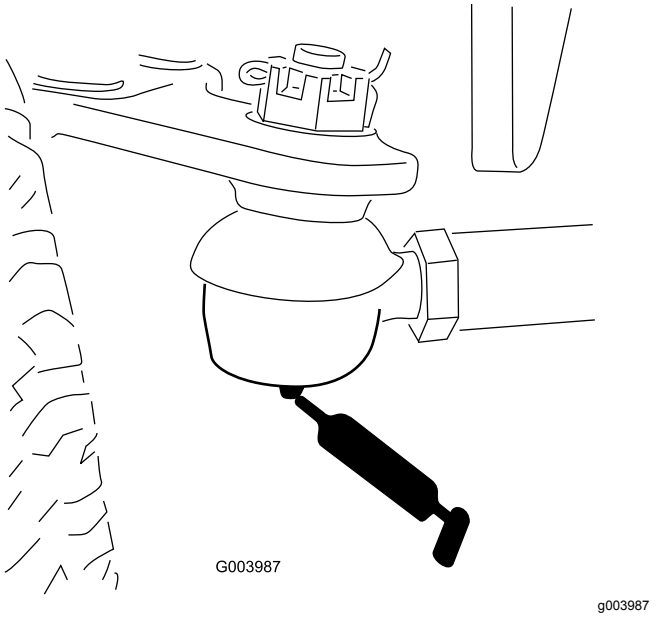


**Figure 80**

- Axle-steering pivot (1) (Figure 81)

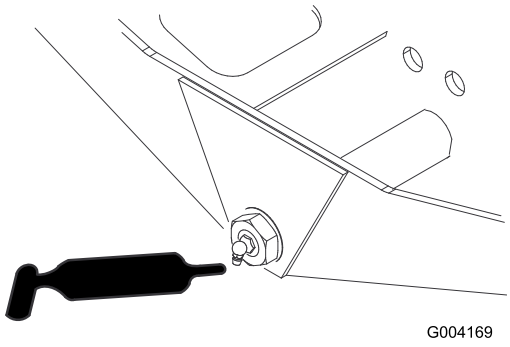


**Figure 81**

- Steering-cylinder ball joints (2) (Figure 82)

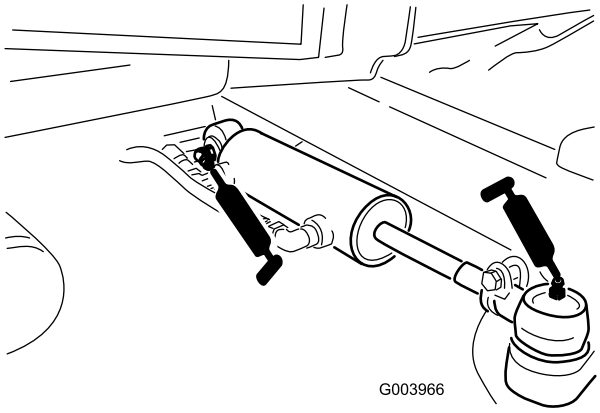


**Figure 82**

- Brake pedal (1) (Figure 83)

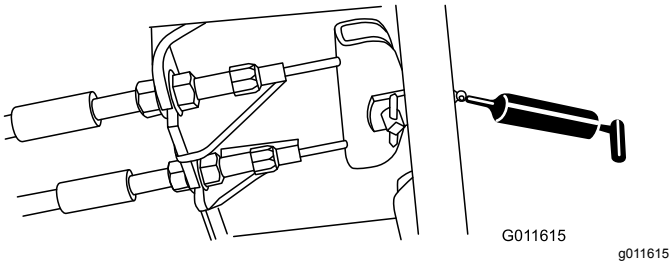


**Figure 83**

# *Engine Maintenance*

## Engine Safety

- Shut off the engine before checking the oil or adding oil to the crankcase.
- Do not change the governor speed or overspeed the engine.

## Servicing the Air Cleaner

**Service Interval:** Every 400 hours (more frequently in extremely dirty or dusty conditions). Service the air cleaner earlier if the air-cleaner indicator shows red.

Check the air-cleaner body for damage which could cause an air leak. Replace it if it is damaged. Check the whole intake system for leaks, damage, or loose hose clamps.

Service the air-cleaner filter only when the service indicator requires it. Changing the air filter before it is necessary only increases the chance of dirt entering the engine when you remove the filter.

***Important:*** **Make sure that the cover is seated correctly and seals with the air-cleaner body.**

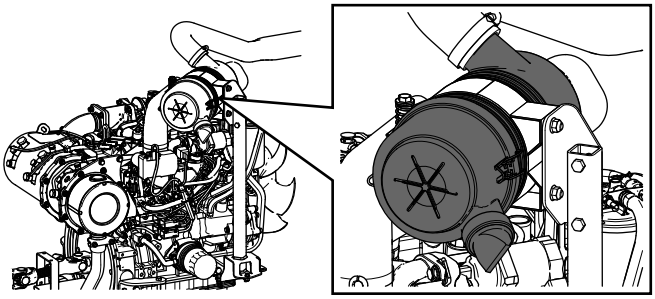

G034923
g034923

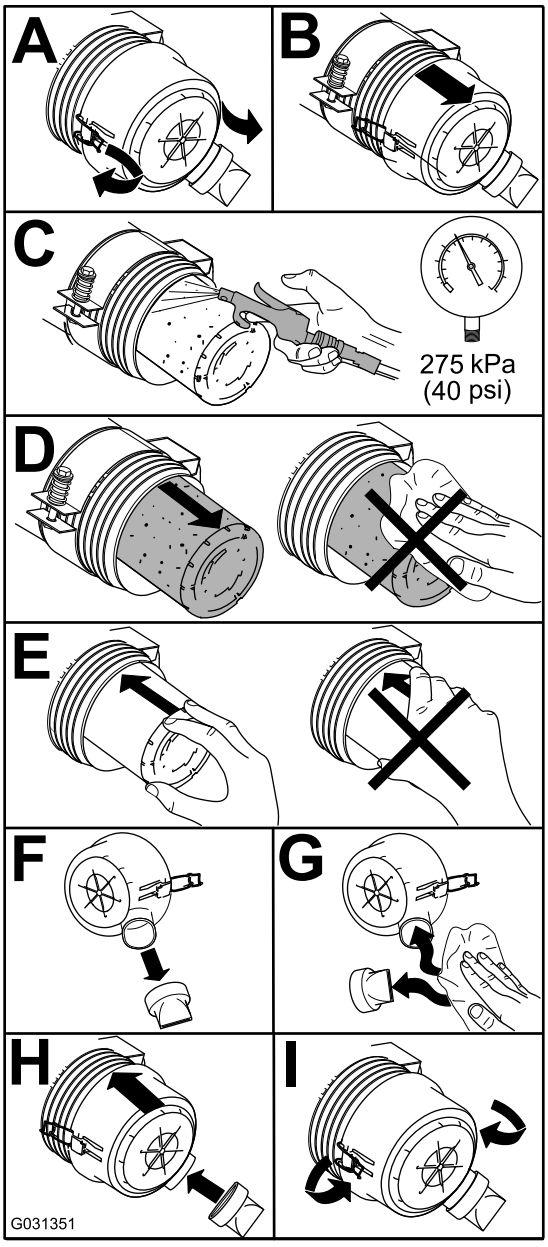


g031351

**Figure 84**

# Servicing the Engine Oil

## Oil Specification

Use high-quality, low-ash engine oil that meets or exceeds the following specifications:

- API service category CJ-4 or higher
- ACEA service category E6
- JASO service category DH-2

***Important:*** **Using engine oil other than API CJ-4 or higher, ACEA E6, or JASO DH-2 may cause the diesel particulate filter to plug or cause engine damage.**

Use the following engine oil viscosity grade:

- Preferred oil: SAE 15W-40 (above -18°C (0°F))
- Alternate oil: SAE 10W-30 or 5W-30 (all temperatures)

Toro Premium Engine Oil is available from your authorized Toro distributor in either 15W-40 or 10W-30 viscosity grades.

## Checking the Level of the Engine Oil

**Service Interval:** Before each use or daily

***Important:*** **Check the engine oil daily. If the engine-oil level is above the Full mark on the dipstick, the engine oil may be diluted with fuel; If the engine oil level is above the Full mark, change the engine oil.**

The best time to check the engine oil is when the engine is cool before it has been started for the day. If it has already been run, allow the oil to drain back down to the sump for at least 10 minutes before checking. If the oil level is at or below the Add mark on the dipstick, add oil to bring the oil level to the Full mark. **Do not overfill the engine with oil**.

***Important:*** **Keep the engine oil level between the upper and lower limits on the oil gauge; the engine may fail if you run it with too much or too little oil.**

1. Park the machine on a level surface, lower the cutting units, engage the parking brake, shut off the engine, and remove the key.
2. Check the level of the engine oil (Figure 85).

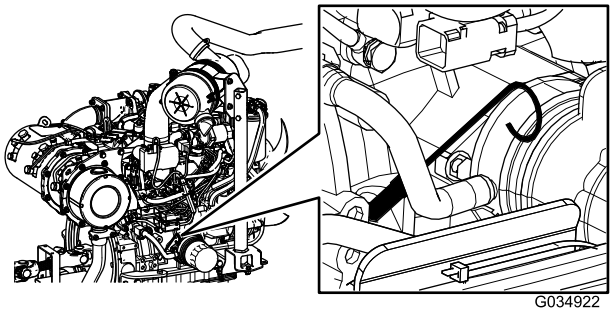


g034922

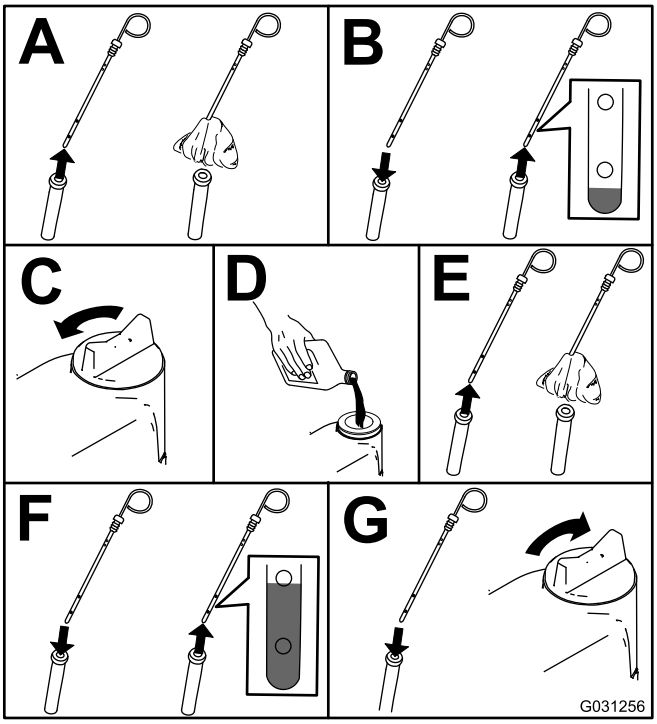


g031256

**Figure 85**

***Important:*** **Be sure to keep the level of the engine oil between the upper and lower limits on the oil gauge. Engine failure may occur as a result of over filling or under filling the engine oil.**

## Crankcase Oil Capacity

5.2 L (5.5 US qt) with the filter

## Changing the Engine Oil and Filter

**Service Interval:** Every 250 hours

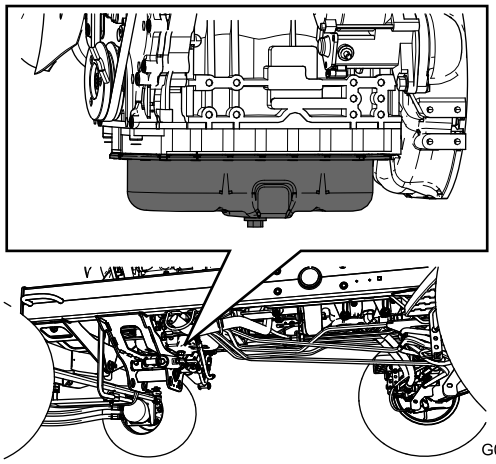


g034924

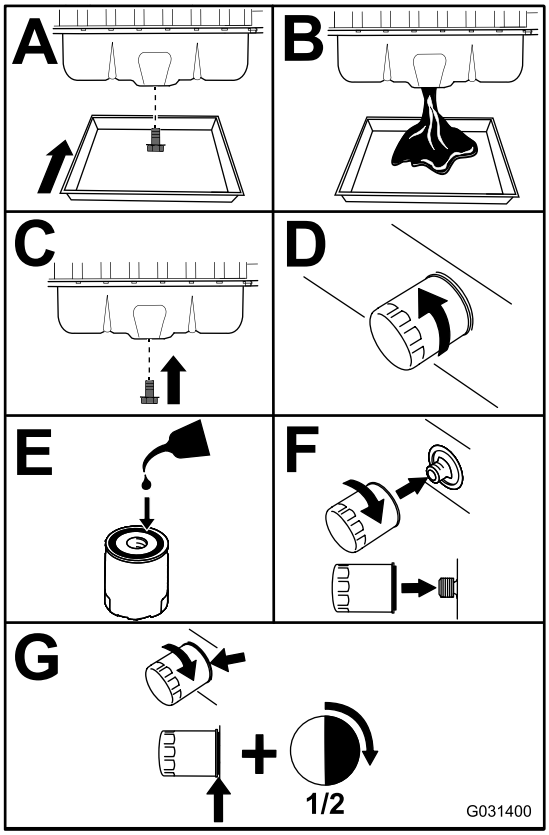


g031400

**Figure 86**

***Important:*** **Do not overtighten the filter.**

Add oil to the crankcase; refer to Oil Specification (page 51).

# Servicing the Diesel-Oxidation Catalyst (DOC) and the Soot Filter

**Service Interval:** Every 6,000 hours—Disassemble, clean, and assemble the soot filter of the DPF or clean the soot filter if engine faults SPN 3251 FMI 0, SPN 3720 FMI 0, or SPN 3720 FMI 16 display in the InfoCenter.

If engine faults CHECK ENGINE SPN 3251 FMI 0, CHECK ENGINE SPN 3720 FMI 0, or CHECK ENGINE SPN 3720 FMI 16 display in the InfoCenter(Figure 87), clean the soot filter using the steps that follow:

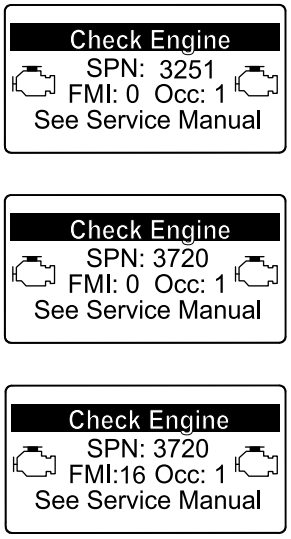


**Figure 87**

1. Refer to the Engine section in the *Service Manual* for information on disassembling and assembling the diesel-oxidation catalyst and the soot filter of the DPF.
2. Refer to your authorized Toro distributor for diesel-oxidation catalyst and the soot filter replacement parts or service.
3. Contact your authorized Toro distributor to reset the engine ECU after you install a clean DPF.

# *Fuel System Maintenance*

**⚠ DANGER**

**Under certain conditions, fuel and fuel vapors are highly flammable and explosive. A fire or explosion from fuel can burn you and others and can cause property damage.**

- **Fill the fuel tank outdoors, in an open area, when the engine is off and is cold. Wipe up any fuel that spills.**
- **Do not fill the fuel tank completely full. Add fuel to the fuel tank until the level is 25 mm (1 inch) below the top of the tank, not the filler neck. This empty space in the tank allows the fuel to expand.**
- **Never smoke when handling fuel, and stay away from an open flame or where fuel fumes may be ignited by a spark.**
- **Store fuel in a clean, safety-approved container and keep the cap in place.**

# Servicing the Water Separator

**Service Interval:** Before each use or daily—Drain water or other contaminants from water separator.

Every 400 hours—Replace the fuel-filter canister.

1. Place a clean container under the fuel filter.
2. Loosen the drain plug on the bottom of the filter canister and open the vent on the top of the canister mount.

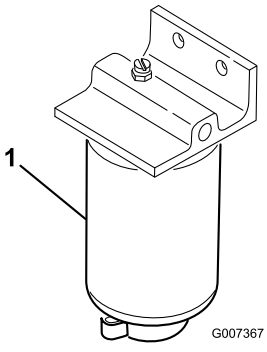


**Figure 88**

1. Water separator filter canister

3. Clean the area where the filter canister mounts.

4. Remove the filter canister and clean the mounting surface.
5. Lubricate the gasket on the filter canister with clean oil.
6. Install the filter canister by hand until the gasket contacts mounting surface, then rotate it an additional 1/2 turn.
7. Tighten the drain plug on the bottom of the filter canister and close the vent on the top of the canister mount.

# Servicing the Engine Fuel Filter

**Service Interval:** Every 400 hours—Replace the engine fuel filter.

1. Clean the area around the fuel-filter head (Figure 89).

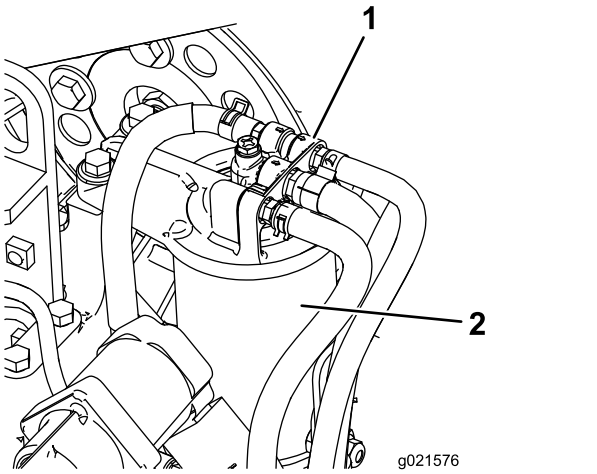


g021576

**Figure 89**

1. Fuel-filter head
2. Fuel filter

2. Remove the filter and clean the filter-head mounting surface (Figure 89).
3. Lubricate the filter gasket with clean lubricating engine oil. Refer to the engine operator's manual, included with the machine, for additional information.
4. Install the dry filter canister, by hand, until the gasket contacts the filter head, then rotate it an additional 1/2 turn.
5. Start the engine and check for fuel leaks around the filter head.

# Checking the Fuel Lines and Connections

**Service Interval:** Every 400 hours (or yearly, whichever comes first).

Check the fuel lines and connections for deterioration, damage, or loose connections.

# Cleaning the Fuel Pick-Up Tube Screen

The fuel pick-up tube, located inside the fuel tank, is equipped with a screen to help prevent debris from entering the fuel system. Remove the fuel pick-up tube and clean screen as required.

# *Electrical System Maintenance*

**WARNING**

**CALIFORNIA**
**Proposition 65 Warning**

**Battery posts, terminals, and related accessories contain lead and lead compounds, chemicals known to the State of California to cause cancer and reproductive harm. Wash hands after handling.**

***Important:*** **Before welding on the machine, disconnect both cables from the battery, both wire harness plugs from the electronic control module, and the terminal connector from the alternator to prevent damage to the electrical system.**

## Electrical System Safety

- Disconnect the battery before repairing the machine. Disconnect the negative terminal first and the positive last. Connect the positive terminal first and the negative last.
- Charge the battery in an open, well-ventilated area, away from sparks and flames. Unplug the charger before connecting or disconnecting the battery. Wear protective clothing and use insulated tools.

## Servicing the Battery

**Service Interval:** Every 50 hours—Clean the battery and check the condition of it (or weekly, whichever comes first).

Every 50 hours—Check the battery-cable connections.

**⚠ DANGER**

**Battery electrolyte contains sulfuric acid, which is fatal if consumed and causes severe burns.**

- **Do not drink electrolyte and avoid contact with skin, eyes, or clothing. Wear safety glasses to shield your eyes and rubber gloves to protect your hands.**
- **Fill the battery where clean water is always available for flushing the skin.**

**⚠ WARNING**

**Charging the battery produces gasses that can explode.**

**Never smoke near the battery and keep sparks and flames away from it.**

Keep the terminals and the entire battery case clean because a dirty battery discharges slowly. To clean the battery, wash the entire case with a solution of baking soda and water. Rinse it with clear water.

## Checking the Fuses

There are 8 fuses in the electrical system. The fuse block is located behind the control-arm-access panel (Figure 90).

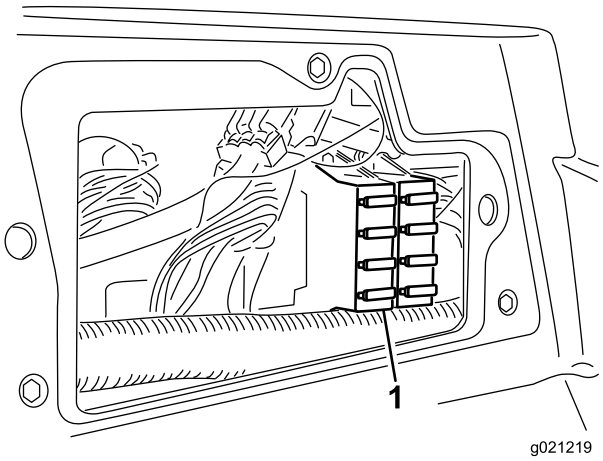


**Figure 90**

1. Fuse block

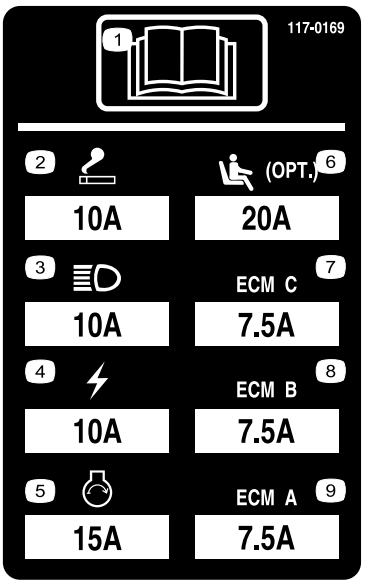


**Figure 91**

# *Drive System Maintenance*

## Checking the Tire Pressure

**Service Interval:** Before each use or daily

Check the tire pressure. The correct air pressure in the front and rear tires is 83 to 103 kPa (12 to 15 psi).

**⚠ DANGER**

**Low tire pressure decreases machine side hill stability. This could cause a rollover, which may result in personal injury or death.**

**Do not under-inflate the tires.**

## Checking the Torque of the Wheel Nuts

**Service Interval:** After the first hour

After the first 10 hours

Every 250 hours

Torque the wheel nuts to 94 to 122 N·m (70 to 90 ft-lb).

**⚠ WARNING**

**Failure to maintain proper torque of the wheel nuts could result in personal injury.**

**Maintain the proper torque on the wheel nuts.**

## Adjusting the Traction Drive for Neutral

The machine must not creep when you release the traction pedal. If it does creep, adjust it as follows:

1. Park the machine on a level surface, lower the cutting units to the ground, shut off the engine, and remove the key.
2. Jack up the front of the machine until the front tires are off the ground. Support the machine with jack stands to prevent it from falling accidentally.

   **Note:** On 4-wheel-drive models, the rear tires must also be off the ground.
3. On the right side of the hydrostat, loosen the locknut on the traction-adjustment cam (Figure 92).

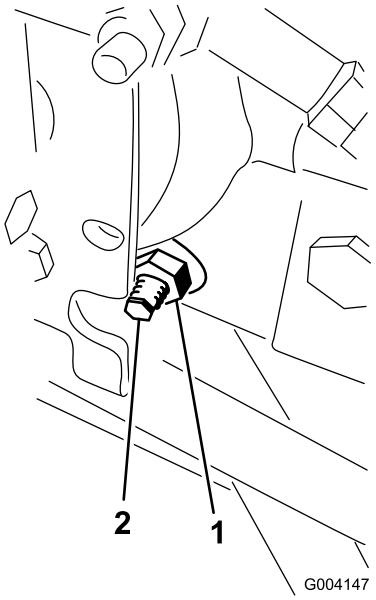


g004147

**Figure 92**

1. Locknut
2. Traction-adjustment cam

**⚠ WARNING**

**The engine must be running while you perform the final adjustment on the traction adjustment cam. This could cause personal injury.**

**Keep your hands, feet, face, and other body parts away from the muffler, other hot parts of the engine, and any rotating parts.**

4. Start the engine and rotate the cam hex in either direction until the wheels stop rotating.
5. Tighten the locknut to secure the adjustment.
6. Shut off the engine, remove the jack stands, and lower the machine to the ground.
7. Test drive the machine to make that sure that it does not creep.

# Adjusting the Rear Wheel Toe-in

**Service Interval:** Every 800 hours—Check the rear wheel toe-in.

1. Rotate the steering wheel to position the rear wheels straight ahead.
2. Loosen the jam nut on each end of the tie rod (Figure 93).

   **Note:** The end of the tie rod with the external groove is a left-hand thread.

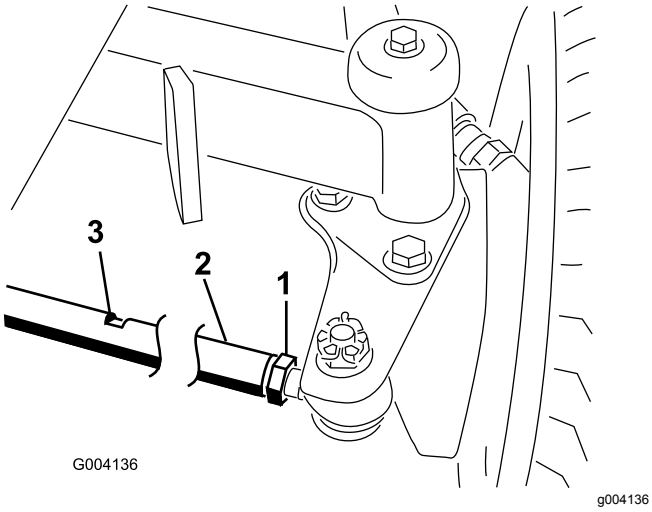


**Figure 93**

1. Jam nut
2. Tie rod
3. Wrench slot

3. Using the wrench slot, rotate the tie rod.
4. Measure the distance at the front and rear of the rear wheels at axle height.

   **Note:** The distance at the front of the rear wheels should be less than 6 mm (1/4 inch) of the distance measured at the rear of the wheels.
5. Repeat this procedure as required.

# *Cooling System Maintenance*

## Cooling System Safety

- Swallowing engine coolant can cause poisoning; keep out of reach from children and pets.
- Discharge of hot, pressurized coolant or touching a hot radiator and surrounding parts can cause severe burns.
  - Always allow the engine to cool at least 15 minutes before removing the radiator cap.
  - Use a rag when opening the radiator cap, and open the cap slowly to allow steam to escape.

## Checking the Cooling System

**Service Interval:** Before each use or daily

Clean debris off the screen, oil cooler, and front of the radiator daily and more often if conditions are extremely dusty and dirty. Refer to Removing Debris from the Cooling System (page 58).

The cooling system is filled with a 50/50 solution of water and permanent ethylene glycol antifreeze. Check the level of coolant in the expansion tank at the beginning of each day before starting the engine. The capacity of the cooling system is 6.6 L (7.0 US qt).

**⚠ CAUTION**

**If the engine has been running, the pressurized, hot coolant can escape and cause burns.**

- **Do not open the radiator cap when the engine is running.**
- **Use a rag when opening the radiator cap, and open the cap slowly to allow steam to escape.**

1. Check the level of coolant in the expansion tank (Figure 94).

   The coolant level should be between the marks on the side of the tank.

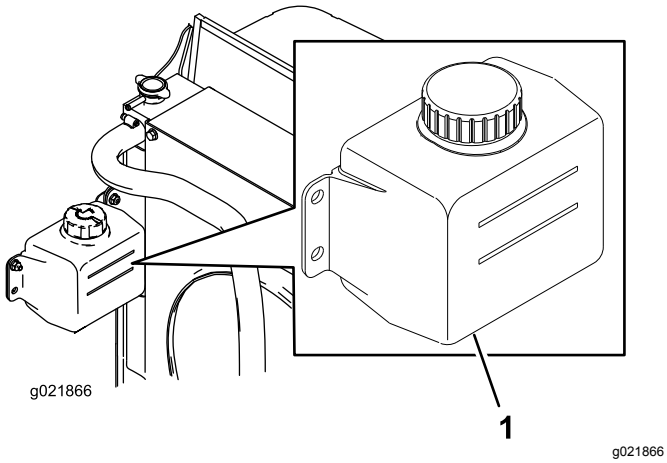


**Figure 94**

1. Expansion tank

2. If the coolant level is low, remove the expansion-tank cap and replenish the system. **Do not overfill.**
3. Install the expansion-tank cap.

# Removing Debris from the Cooling System

**Service Interval:** Before each use or daily (More frequently in dirty operating conditions).

Every 100 hours—Inspect the cooling-system hoses.

Every 2 years—Flush and replace the cooling-system fluid.

1. Park the machine on a level surface, lower the cutting units, engage the parking brake, shut off the engine, and remove the key.
2. Thoroughly clean all debris out of the engine area.
3. Unlatch the clamp and pivot open the rear screen (Figure 95).

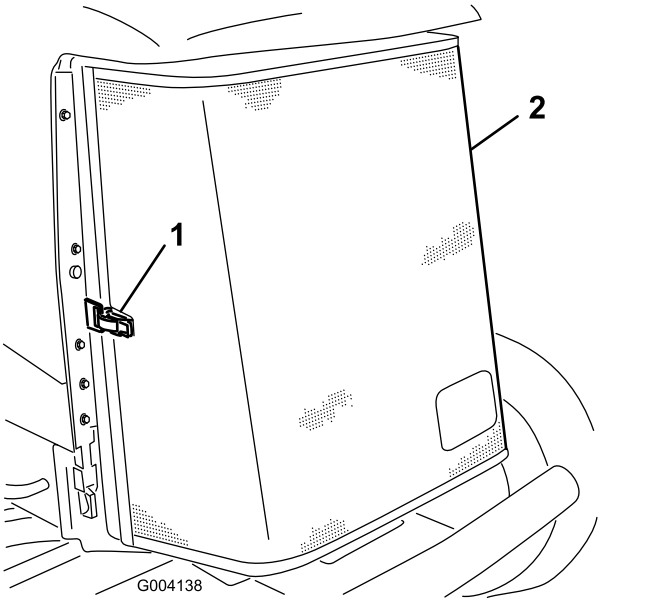


**Figure 95**

1. Rear-screen latch
2. Rear screen

4. Thoroughly clean both sides of the radiator/oil cooler with compressed air (Figure 96).

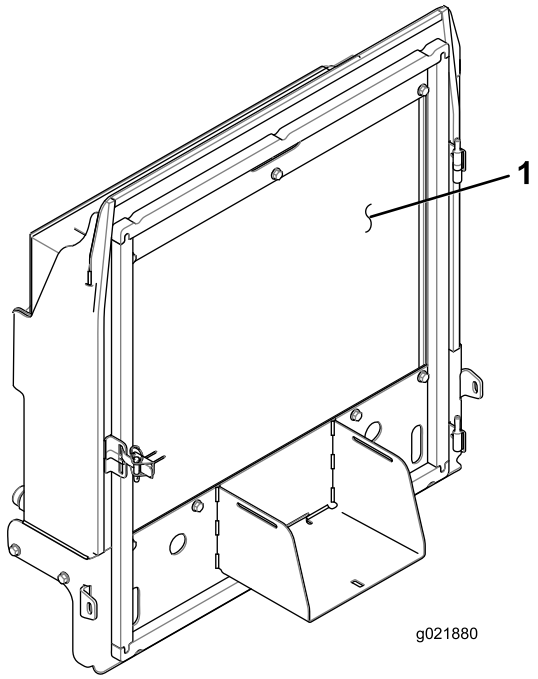


**Figure 96**

1. Radiator/oil cooler

5. Close the screen and secure the latch.

# Brake Maintenance

## Adjusting the Parking Brakes

Adjust the brakes when there is more than 2.5 cm (1 inch) of free travel of the brake pedal, or when more holding force is required (Figure 97). Free travel is the distance that the brake pedal moves before you feel braking resistance.

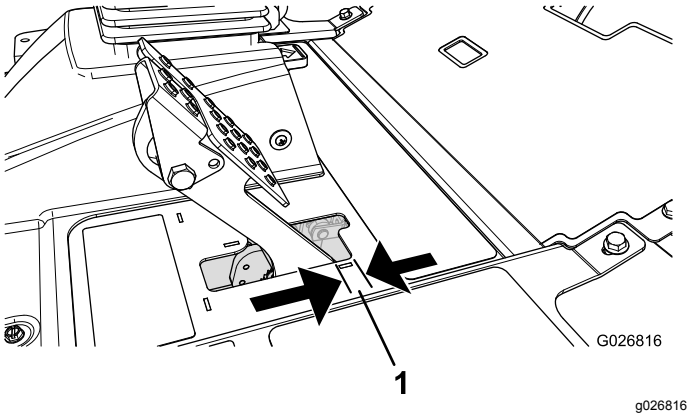


**Figure 97**

1. Free travel

**Note:** Use the wheel-motor backlash to rock the drums back and forth to ensure that the drums are free prior to and after adjustment.

1. To reduce free travel of the brake pedals, tighten the brakes by loosening the front nut on the threaded end of the brake cable (Figure 98).

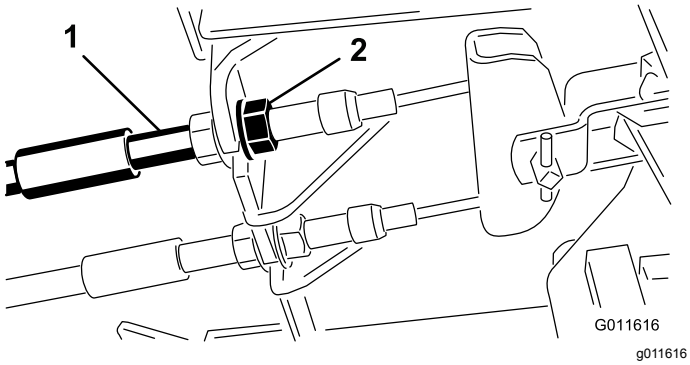


**Figure 98**

1. Brake cable
2. Front nut

2. Tighten the rear nut to move the cable backward until brake pedals have 0.63 to 1.27 cm (1/4 to 1/2 inch) of free travel, before the wheel locks up (Figure 97).
3. Tighten the front nuts, ensuring that both cables actuate the brakes simultaneously.

**Note:** Ensure that the cable conduit does not rotate while you are tightening the nuts.

## Adjusting the Parking-Brake Latch

If the parking brake fails to engage and latch, adjust the brake pawl.

1. Loosen the 2 screws securing the parking-brake pawl to the frame (Figure 99).

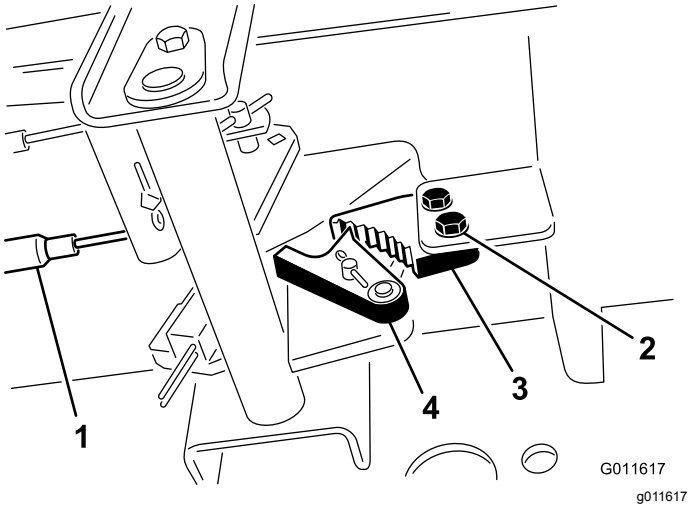


**Figure 99**

1. Brake cables
2. Screw
3. Parking-brake pawl
4. Brake detent

2. Press the parking-brake pedal forward until the brake detent completely engages on the brake pawl (Figure 99).
3. Tighten the 2 screws to lock the adjustment.
4. Press the brake pedal to release the parking brake.
5. Check the adjustment and adjust as required.

# Belt Maintenance

## Servicing the Alternator Belt

**Service Interval:** After the first 10 hours

Every 100 hours

**Note:** For proper belt tension, allow 10 mm (3/8 inch) deflection when a force of 44 N (10 lb) is applied on the belt midway between the pulleys.

1. If the deflection is not 10 mm (3/8 inch), loosen the alternator mounting bolts (Figure 100).

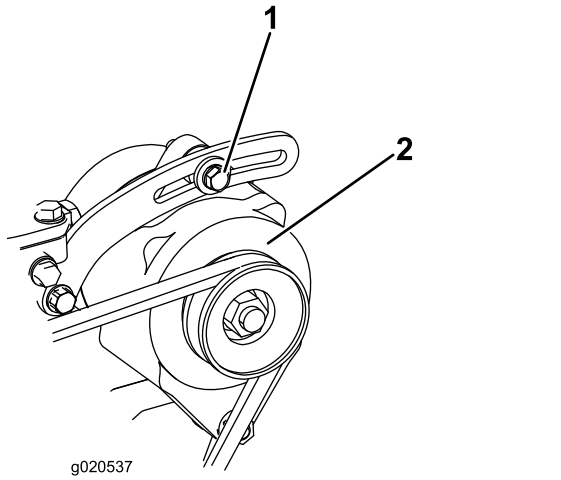


g020537

**Figure 100**

1. Mounting bolt
2. Alternator

2. Increase or decrease the alternator-belt tension and tighten the bolts.
3. Check the deflection of the belt again to ensure that the tension is correct.

# Hydraulic System Maintenance

## Hydraulic System Safety

- Seek immediate medical attention if fluid is injected into skin. Injected fluid must be surgically removed within a few hours by a doctor.
- Ensure that all hydraulic-fluid hoses and lines are in good condition and all hydraulic connections and fittings are tight before applying pressure to the hydraulic system.
- Keep your body and hands away from pinhole leaks or nozzles that eject high-pressure hydraulic fluid.
- Use cardboard or paper to find hydraulic leaks.
- Safely relieve all pressure in the hydraulic system before performing any work on the hydraulic system.

## Checking the Hydraulic Lines and Hoses

**Service Interval:** Before each use or daily

Check the hydraulic lines and hoses for leaks, kinked lines, loose mounting supports, wear, loose fittings, weather deterioration, and chemical deterioration. Make all necessary repairs before operating.

## Checking the Hydraulic Fluid

**Service Interval:** Before each use or daily

1. Park the machine on a level surface, lower the cutting units, shut off the engine, engage the parking brake, and remove the key.
2. Clean the area around the filler neck and cap of the hydraulic tank (Figure 101). Remove the cap from the filler neck.

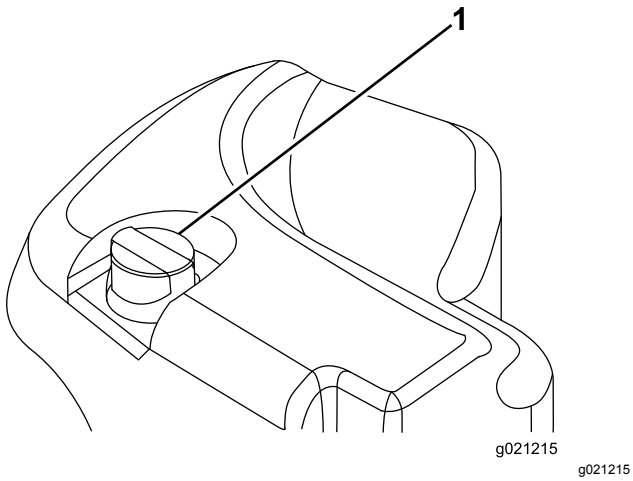


**Figure 101**

1. Hydraulic-tank cap

3. Remove the dipstick from the filler neck and wipe it with a clean rag.
4. Insert the dipstick into the filler neck; then remove it and check the level of the fluid.

   **Note:** The fluid level should be within 6.3 mm (1/4 inch) of the mark on the dipstick.

   ***Important:*** **Do not overfill the hydraulic tank.**
5. If the level is low, add appropriate fluid to raise the level to the FULL mark.
6. Install the dipstick and cap onto the filler neck.

# Hydraulic Fluid Specifications

The reservoir is filled at the factory with high-quality hydraulic fluid. Check the level of the hydraulic fluid before you first start the engine and daily thereafter; refer to Checking the Hydraulic Fluid (page 60).

**Recommended hydraulic fluid:** Toro PX Extended Life Hydraulic Fluid; available in 19 L (5 US gallon) pails or 208 L (55 US gallon) drums.

**Note:** A machine using the recommended replacement fluid requires less frequent fluid and filter changes.

**Alternative hydraulic fluids:** If Toro PX Extended Life Hydraulic Fluid is not available, you may use another conventional, petroleum-based hydraulic fluid having specifications that fall within the listed range for all the following material properties and that it meets industry standards. Do not use synthetic fluid. Consult with your lubricant distributor to identify a satisfactory product.

**Note:** Toro does not assume responsibility for damage caused by improper substitutions, so use products only from reputable manufacturers who will stand behind their recommendation.

### High Viscosity Index/Low Pour Point Anti-wear Hydraulic Fluid, ISO VG 46

Material Properties:

| | |
|---|---|
| Viscosity, ASTM D445 | cSt @ 40°C (104°F) 44 to 48 |
| Viscosity Index ASTM D2270 | 140 or higher |
| Pour Point, ASTM D97 | -37°C to -45°C (-34°F to -49°F) |
| Industry Specifications: | Eaton Vickers 694 (I-286-S, M-2950-S/35VQ25 or M-2952-S) |

**Note:** Many hydraulic fluids are almost colorless, making it difficult to spot leaks. A red dye additive for the hydraulic fluid is available in 20 ml (0.67 fl oz) bottles. A bottle is sufficient for 15 to 22 L (4 to 6 US gallons) of hydraulic fluid. Order Part No. 44-2500 from your authorized Toro distributor.

***Important:*** **Toro Premium Synthetic Biodegradable Hydraulic Fluid is the only synthetic biodegradable fluid approved by Toro. This fluid is compatible with the elastomers used in Toro hydraulic systems and is suitable for a wide-range of temperature conditions. This fluid is compatible with conventional mineral oils, but for maximum biodegradability and performance, the hydraulic system should be thoroughly flushed of conventional fluid. The oil is available in 19 L (5 US gallons) pails or 208 L (55 US gallons) from your authorized Toro distributor.**

# Hydraulic Fluid Capacity

30 L (8 US gallons); refer to Hydraulic Fluid Specifications (page 61)

# Changing the Hydraulic Fluid

**Service Interval:** Every 2,000 hours—**If you are using the recommended hydraulic fluid,** change the hydraulic fluid.

Every 800 hours—**If you are not using the recommended hydraulic fluid or have ever filled the reservoir with an alternative fluid,** change the hydraulic fluid.

If the fluid becomes contaminated, contact your authorized Toro distributor to flush the system. Contaminated fluid looks milky or black when compared to clean fluid.

1. Park the machine on a level surface, lower the cutting units, engage the parking brake, shut off the engine, and remove the key.
2. Raise the hood.
3. Place a large drain pan under the fitting secured to the bottom of the hydraulic-fluid reservoir (Figure 102).

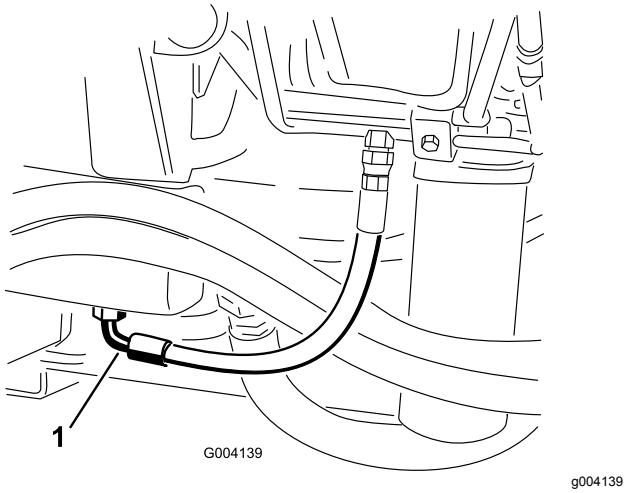


**Figure 102**

1. Hose

4. Disconnect the hose from the bottom of the fitting and let the hydraulic fluid flow into the drain pan.
5. Install the hose when hydraulic fluid stops draining.
6. Fill the reservoir with hydraulic fluid; refer to Hydraulic Fluid Specifications (page 61) and Hydraulic Fluid Capacity (page 61).

   ***Important:*** **Use only hydraulic fluids specified. Other fluids could damage the system.**
7. Install the reservoir cap.
8. Start the engine and use all of the hydraulic controls to distribute hydraulic fluid throughout the system.
9. Check for leaks.
10. Shut off the engine.
11. Check the level of the hydraulic fluid and add enough to raise the level to the FULL mark on the dipstick.

    ***Important:*** **Do not overfill the reservoir.**

# Replacing the Hydraulic Filters

**Service Interval:** Every 1,000 hours—**If you are using the recommended hydraulic fluid,** replace the hydraulic filters.

Every 800 hours—**If you are not using the recommended hydraulic fluid or have ever filled the reservoir with an alternative fluid,** replace the hydraulic filters.

The hydraulic system is equipped with a service-interval indicator (Figure 103). With the engine running at operating temperature, view the indicator, it should be in the green zone. When the indicator is in the red zone, change the hydraulic filters.

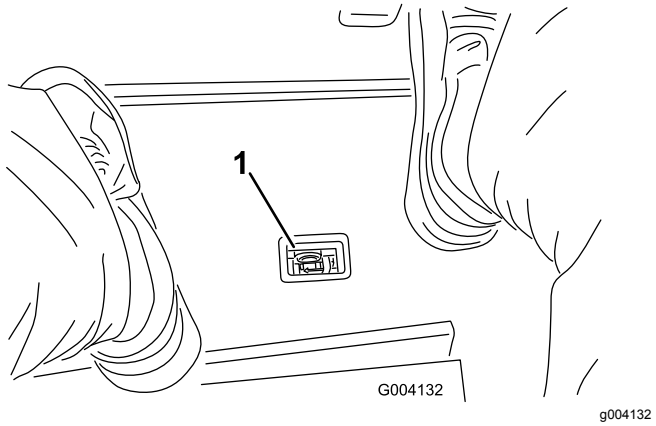


**Figure 103**

1. Hydraulic-filter-restriction indicator

***Important:*** **Use of any other filters may void the warranty on some components.**

1. Park the machine on a level surface, lower the cutting units, engage the parking brake, shut off the engine, and remove the key.
2. Clean the area around the filter-mounting area and place a drain pan under the filter (Figure 104) and (Figure 105).

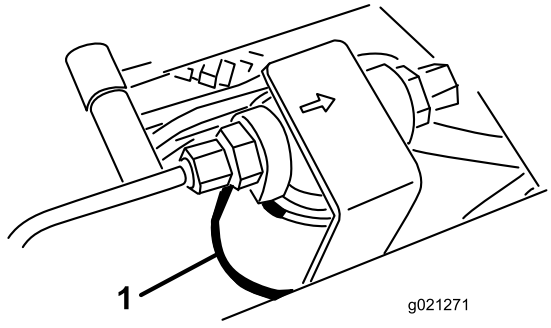


g021271

**Figure 104**

1. Hydraulic filter

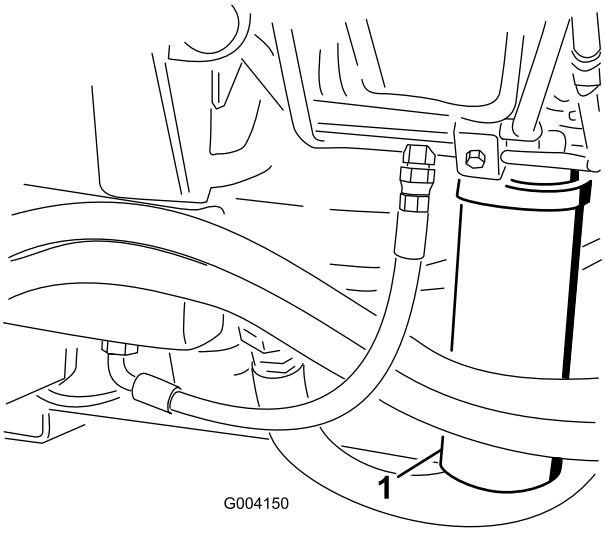


g004150

**Figure 105**

1. Hydraulic filter

3. Remove the filter.
4. Lubricate the gasket on the new filter with hydraulic oil.
5. Ensure that the filter-mounting area is clean.
6. Install the filter by hand until the gasket contacts the mounting surface, then rotate it an additional 1/2 turn.
7. Repeat the procedure on the other filter.
8. Start the engine and let it run for about 2 minutes to purge air from the system.
9. Shut off the engine and check for leaks.

# Using the Hydraulic System Test Ports

Use the hydraulic-system test ports to test the pressure in the hydraulic circuits. Contact your authorized Toro distributor for assistance.

Use the test ports on the front hydraulic tubes to assist in troubleshooting the traction circuit (Figure 106).

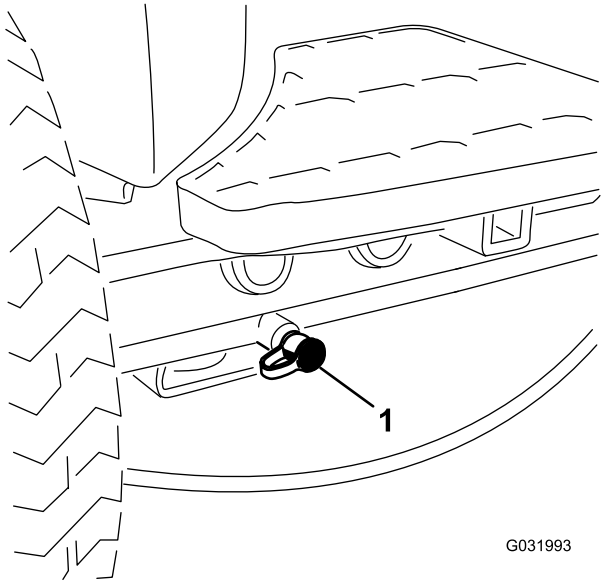


g031993

**Figure 106**

1. Traction-circuit test port

Use the test ports on the mow manifold block to assist in troubleshooting the mow circuit (Figure 107).

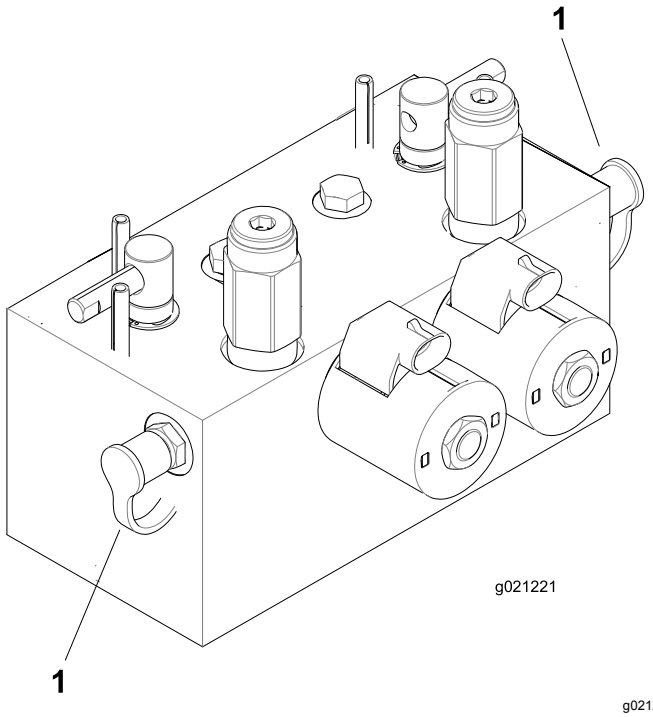


g021221

**Figure 107**

1. Mow-circuit test ports

Use the test port on the lift manifold block to assist in troubleshooting the lift circuit (Figure 108).

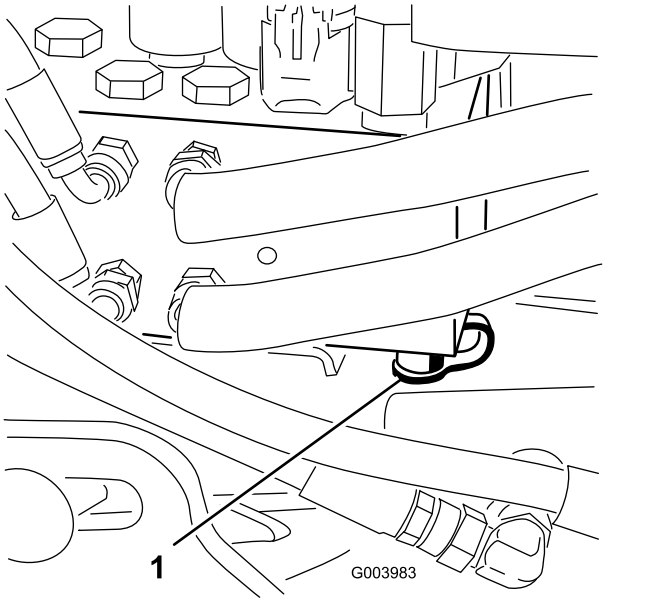


**Figure 108**

1. Lift-circuit test port

# *Cutting-Unit System Maintenance*

## Blade Safety

- A worn or damaged blade or bedknife can break, and a piece could be thrown toward you or bystanders, resulting in serious personal injury or death.
- Inspect the cutting units periodically for excessive wear or damage.
- Use care when checking the cutting units. Wrap the blades or wear gloves, and use caution when servicing the reels and bedknives. Only replace or sharpen the reels and bedknives; never straighten or weld them.
- On machines with multiple cutting units, take care when rotating a reel; it can cause the reels in the other cutting units to rotate.

## Checking the Reel-to-Bedknife Contact

**Service Interval:** Before each use or daily

Each day before operating, check the reel-to-bedknife contact, regardless of whether the quality of cut had previously been acceptable. There must be light contact across the full length of the reel and the bedknife (refer to Adjusting the Reel to Bedknife in the cutting unit *Operator's Manual*).

## Backlapping the Cutting Units

**⚠ WARNING**

**Contact with the reels or other moving parts can result in personal injury.**

- **Keep fingers, hands, and clothing away from the reels or other moving parts.**
- **Never attempt to turn the reels by hand or foot while the engine is running.**

**Note:** When backlapping, the front units all operate together, and the rear units operate together.

1. Park the machine on a level surface, lower the cutting units, engage the parking brake, shut off the engine, and move the Enable/Disable switch to the DISABLE position.
2. Unlock and raise the seat to expose the backlap levers (Figure 109).

3. Make initial reel-to-bedknife adjustments appropriate for backlapping on all cutting units that are to be backlapped; refer to the *Operator's Manual* for the cutting units.
4. Start the engine and run at low idle speed.

**⚠ DANGER**

**Changing the engine speed while backlapping may cause the reels to stall.**

- **Never change the engine speed while backlapping.**
- **Backlap only at low engine-idle speed.**

5. Select either front, rear, or both backlap levers to determine which units to backlap (Figure 109).

**⚠ DANGER**

**To avoid personal injury, be certain that you are clear of the cutting units before proceeding.**

6. With the Mow/Transport lever in the MOW position, move the Enable/Disable switch to the ENABLE position. Move the Lower Mow/Lift control forward to start the backlapping operation on the designated reels.
7. Apply lapping compound with a long-handled brush.

   ***Important:*** **Never use a short-handled brush.**
8. If the reels stall or become erratic while backlapping, select a higher reel-speed setting until the speed stabilizes, then return the reel speed to your desired speed.
9. To adjust the cutting units while backlapping, turn the reels off by moving the Lower Mow/Raise lever rearward; the Enable/Disable switch to the DISABLE position, and shut off the engine.

   After completing adjustments, repeat steps 4 through 8.

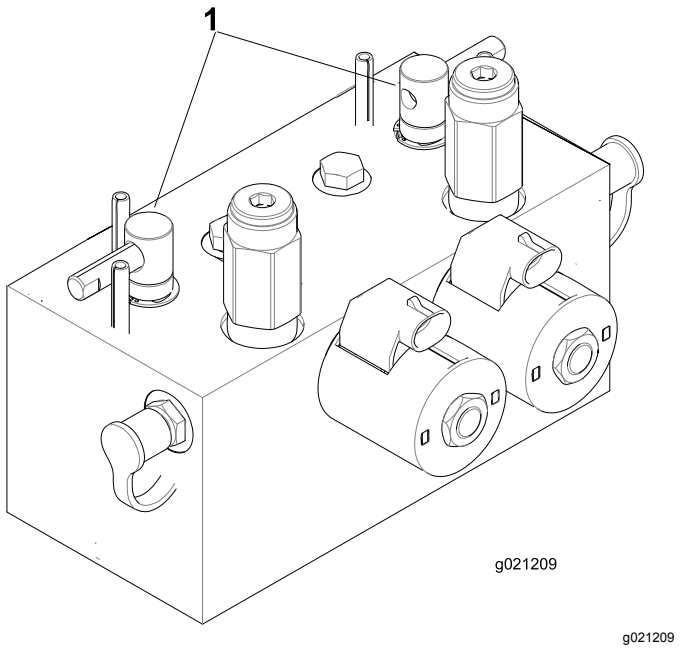


g021209

**Figure 109**

1. Backlap levers

10. Repeat the procedure for all cutting units you want to backlap.
11. When finished, return the backlap levers to the MOW position, lower the seat, and wash all lapping compound off the cutting units.

    **Note:** Adjust the cutting-unit reel to bedknife as needed. Adjust the cutting-unit reel speed to the desired mowing setting.

    ***Important:*** **If the backlap switch is not returned to the OFF position after backlapping, the cutting units do not raise or function properly.**

    **Note:** For a better cutting edge, run a file across the front face of the bedknife after lapping. This removes any burrs or rough edges that may have built up on the cutting edge.

# *Cleaning*

## Washing the Machine

Wash the machine as needed using water alone or with a mild detergent. You may use a rag when washing the machine.

***Important:*** **Do not use brackish or reclaimed water to clean the machine.**

***Important:*** **Do not use power-washing equipment to wash the machine. Power-washing equipment may damage the electrical system, loosen important decals, or wash away necessary grease at friction points. Avoid excessive use of water near the control panel, engine, and battery.**

***Important:*** **Do not wash the machine with the engine running. Washing the machine with the engine running may result in internal engine damage.**

# Storage

## Storage Safety

- Shut off the engine, remove the key, and wait for all movement to stop before you leave the operator's position. Allow the machine to cool before adjusting, servicing, cleaning, or storing it.
- Do not store the machine or fuel container where there is an open flame, spark, or pilot light, such as on a water heater or other appliance.

## Preparing the Traction Unit

1. Park the machine on a level surface, lower the cutting units, engage the parking brake, shut off the engine, and remove the key.
2. Thoroughly clean the traction unit, cutting units, and the engine.
3. Check the tire pressure; refer to Checking the Tire Pressure (page 56).
4. Check all fasteners for looseness; tighten them as necessary.
5. Grease or oil all grease fittings and pivot points. Wipe up any excess lubricant.
6. Lightly sand and use touch-up paint on painted areas that are scratched, chipped, or rusted. Repair any dents in the metal body.
7. Service the battery and cables as follows; refer to Electrical System Safety (page 55):
   A. Remove the battery terminals from the battery posts.
   B. Clean the battery, terminals, and posts with a wire brush and baking-soda solution.
   C. Coat the cable terminals and battery posts with Grafo 112X skin-over grease (Toro Part No. 505-47) or petroleum jelly to prevent corrosion.
   D. Slowly charge the battery every 60 days for 24 hours to prevent lead sulfation of the battery.

## Preparing the Engine

1. Drain the engine oil from the oil pan and install the drain plug.
2. Remove and discard the oil filter. Install a new oil filter.
3. Fill the engine with specified motor oil.
4. Start the engine and run it at idle speed for approximately 2 minutes.
5. Shut off the engine and remove the key.

6. Flush the fuel tank with fresh, clean fuel.
7. Secure all of the fuel-system fittings.
8. Thoroughly clean and service the air-cleaner assembly.
9. Seal the air-cleaner inlet and the exhaust outlet with weatherproof tape.
10. Check the antifreeze protection and add a 50/50 solution of water and ethylene glycol antifreeze as needed for the expected minimum temperature in your area.

# Notes:

# Notes:

# EEA/UK Privacy Notice

**Toro's Use of Your Personal Information**

The Toro Company ("Toro") respects your privacy. When you purchase our products, we may collect certain personal information about you, either directly from you or through your local Toro company or dealer. Toro uses this information to fulfil contractual obligations - such as to register your warranty, process your warranty claim or to contact you in the event of a product recall - and for legitimate business purposes - such as to gauge customer satisfaction, improve our products or provide you with product information which may be of interest. Toro may share your information with our subsidiaries, affiliates, dealers or other business partners in connection these activities. We may also disclose personal information when required by law or in connection with the sale, purchase or merger of a business. We will never sell your personal information to any other company for marketing purposes.

**Retention of your Personal Information**

Toro will keep your personal information as long as it is relevant for the above purposes and in accordance with legal requirements. For more information about applicable retention periods please contact legal@toro.com.

**Toro's Commitment to Security**

Your personal information may be processed in the US or another country which may have less strict data protection laws than your country of residence. Whenever we transfer your information outside of your country of residence, we will take legally required steps to ensure that appropriate safeguards are in place to protect your information and to make sure it is treated securely.

**Access and Correction**

You may have the right to correct or review your personal data, or object to or restrict the processing of your data. To do so, please contact us by email at legal@toro.com. If you have concerns about the way in which Toro has handled your information, we encourage you to raise this directly with us. Please note that European residents have the right to complain to your Data Protection Authority.

# California Proposition 65 Warning Information

## What is this warning?

You may see a product for sale that has a warning label like the following:



**WARNING:** Cancer and Reproductive Harm—www.p65Warnings.ca.gov.

## What is Prop 65?

Prop 65 applies to any company operating in California, selling products in California, or manufacturing products that may be sold in or brought into California. It mandates that the Governor of California maintain and publish a list of chemicals known to cause cancer, birth defects, and/or other reproductive harm. The list, which is updated annually, includes hundreds of chemicals found in many everyday items. The purpose of Prop 65 is to inform the public about exposure to these chemicals.

Prop 65 does not ban the sale of products containing these chemicals but instead requires warnings on any product, product packaging, or literature with the product. Moreover, a Prop 65 warning does not mean that a product is in violation of any product safety standards or requirements. In fact, the California government has clarified that a Prop 65 warning "is not the same as a regulatory decision that a product is 'safe' or 'unsafe.'" Many of these chemicals have been used in everyday products for years without documented harm. For more information, go to https://oag.ca.gov/prop65/faqs-view-all.

A Prop 65 warning means that a company has either (1) evaluated the exposure and has concluded that it exceeds the "no significant risk level"; or (2) has chosen to provide a warning based on its understanding about the presence of a listed chemical without attempting to evaluate the exposure.

## Does this law apply everywhere?

Prop 65 warnings are required under California law only. These warnings are seen throughout California in a wide range of settings, including but not limited to restaurants, grocery stores, hotels, schools, and hospitals, and on a wide variety of products. Additionally, some online and mail order retailers provide Prop 65 warnings on their websites or in catalogs.

## How do the California warnings compare to federal limits?

Prop 65 standards are often more stringent than federal and international standards. There are various substances that require a Prop 65 warning at levels that are far lower than federal action limits. For example, the Prop 65 standard for warnings for lead is 0.5 µg/day, which is well below the federal and international standards.

## Why don't all similar products carry the warning?

- Products sold in California require Prop 65 labelling while similar products sold elsewhere do not.
- A company involved in a Prop 65 lawsuit reaching a settlement may be required to use Prop 65 warnings for its products, but other companies making similar products may have no such requirement.
- The enforcement of Prop 65 is inconsistent.
- Companies may elect not to provide warnings because they conclude that they are not required to do so under Prop 65; a lack of warnings for a product does not mean that the product is free of listed chemicals at similar levels.

## Why does Toro include this warning?

Toro has chosen to provide consumers with as much information as possible so that they can make informed decisions about the products they buy and use. Toro provides warnings in certain cases based on its knowledge of the presence of one or more listed chemicals without evaluating the level of exposure, as not all the listed chemicals provide exposure limit requirements. While the exposure from Toro products may be negligible or well within the "no significant risk" range, out of an abundance of caution, Toro has elected to provide the Prop 65 warnings. Moreover, if Toro does not provide these warnings, it could be sued by the State of California or by private parties seeking to enforce Prop 65 and subject to substantial penalties.

# The Toro Warranty

Two-Year or 1,500 Hours Limited Warranty

## Conditions and Products Covered

The Toro Company and its affiliate, Toro Warranty Company, pursuant to an agreement between them, jointly warrant your Toro Commercial product ("Product") to be free from defects in materials or workmanship for 2 years or 1,500 operational hours*, whichever occurs first. This warranty is applicable to all products with the exception of Aerators (refer to separate warranty statements for these products). Where a warrantable condition exists, we will repair the Product at no cost to you including diagnostics, labor, parts, and transportation. This warranty begins on the date the Product is delivered to the original retail purchaser.
* Product equipped with an hour meter.

## Instructions for Obtaining Warranty Service

You are responsible for notifying the Commercial Products Distributor or Authorized Commercial Products Dealer from whom you purchased the Product as soon as you believe a warrantable condition exists. If you need help locating a Commercial Products Distributor or Authorized Dealer, or if you have questions regarding your warranty rights or responsibilities, you may contact us at:

Toro Commercial Products Service Department
Toro Warranty Company
8111 Lyndale Avenue South
Bloomington, MN 55420-1196

952–888–8801 or 800–952–2740
E-mail: commercial.warranty@toro.com

## Owner Responsibilities

As the product owner, you are responsible for required maintenance and adjustments stated in your *Operator's Manual*. Repairs for product issues caused by failure to perform required maintenance and adjustments are not covered under this warranty.

## Items and Conditions Not Covered

Not all product failures or malfunctions that occur during the warranty period are defects in materials or workmanship. This warranty does not cover the following:

- Product failures which result from the use of non-Toro replacement parts, or from installation and use of add-on, or modified non-Toro branded accessories and products.
- Product failures which result from failure to perform recommended maintenance and/or adjustments.
- Product failures which result from operating the Product in an abusive, negligent, or reckless manner.
- Parts consumed through use that are not defective. Examples of parts which are consumed, or used up, during normal Product operation include, but are not limited to, brake pads and linings, clutch linings, blades, reels, rollers and bearings (sealed or greasable), bed knives, spark plugs, castor wheels and bearings, tires, filters, belts, and certain sprayer components such as diaphragms, nozzles, and check valves.
- Failures caused by outside influence, including, but not limited to, weather, storage practices, contamination, use of unapproved fuels, coolants, lubricants, additives, fertilizers, water, or chemicals.
- Failure or performance issues due to the use of fuels (e.g. gasoline, diesel, or biodiesel) that do not conform to their respective industry standards.
- Normal noise, vibration, wear and tear, and deterioration. Normal "wear and tear" includes, but is not limited to, damage to seats due to wear or abrasion, worn painted surfaces, scratched decals or windows.

## Parts

Parts scheduled for replacement as required maintenance are warranted for the period of time up to the scheduled replacement time for that part. Parts replaced under this warranty are covered for the duration of the original product warranty and become the property of Toro. Toro will make the final decision whether to repair any existing part or assembly or replace it. Toro may use remanufactured parts for warranty repairs.

## Deep Cycle and Lithium-Ion Battery Warranty

Deep cycle and Lithium-Ion batteries have a specified total number of kilowatt-hours they can deliver during their lifetime. Operating, recharging, and maintenance techniques can extend or reduce total battery life. As the batteries in this product are consumed, the amount of useful work between charging intervals will slowly decrease until the battery is completely worn out. Replacement of worn out batteries, due to normal consumption, is the responsibility of the product owner. Note: (Lithium-Ion battery only): Pro-rated after 2 years. Refer to the battery warranty for additional information.

## Lifetime Crankshaft Warranty (ProStripe 02657 Model Only)

The Prostripe which is fitted with a genuine Toro Friction Disc and Crank-Safe Blade Brake Clutch (integrated Blade Brake Clutch (BBC) + Friction Disc assembly) as original equipment and used by the original purchaser in accordance with recommended operating and maintenance procedures, are covered by a Lifetime Warranty against engine crankshaft bending. Machines fitted with friction washers, Blade Brake Clutch (BBC) units and other such devices are not covered by the Lifetime Crankshaft Warranty.

## Maintenance is at Owner's Expense

Engine tune-up, lubrication, cleaning and polishing, replacement of filters, coolant, and completing recommended maintenance are some of the normal services Toro products require that are at the owner's expense.

## General Conditions

Repair by an Authorized Toro Distributor or Dealer is your sole remedy under this warranty.

**Neither The Toro Company nor Toro Warranty Company is liable for indirect, incidental or consequential damages in connection with the use of the Toro Products covered by this warranty, including any cost or expense of providing substitute equipment or service during reasonable periods of malfunction or non-use pending completion of repairs under this warranty. Except for the Emissions warranty referenced below, if applicable, there is no other express warranty. All implied warranties of merchantability and fitness for use are limited to the duration of this express warranty.**

Some states do not allow exclusions of incidental or consequential damages, or limitations on how long an implied warranty lasts, so the above exclusions and limitations may not apply to you. This warranty gives you specific legal rights, and you may also have other rights which vary from state to state.

## Note Regarding Emissions Warranty

The Emissions Control System on your Product may be covered by a separate warranty meeting requirements established by the U.S. Environmental Protection Agency (EPA) and/or the California Air Resources Board (CARB). The hour limitations set forth above do not apply to the Emissions Control System Warranty. Refer to the Engine Emission Control Warranty Statement supplied with your product or contained in the engine manufacturer's documentation.

## Countries Other than the United States or Canada

Customers who have purchased Toro products exported from the United States or Canada should contact their Toro Distributor (Dealer) to obtain guarantee policies for your country, province, or state. If for any reason you are dissatisfied with your Distributor's service or have difficulty obtaining guarantee information, contact your Authorized Toro Service Center.