Form No. 3428-206 Rev A

TORO®

Count on it.

Operator's Manual

Reelmaster® 7000-D 4-Wheel Drive Traction Unit

Model No. 03781—Serial No. 403350001 and Up
Model No. 03781TE—Serial No. 400000000 and Up

Register at www.Toro.com.
Original Instructions (EN)

CE

3428-206 A

This product complies with all relevant European directives. For details, please see the separate product specific Declaration of Conformity (DOC) sheet.

It is a violation of California Public Resource Code Section 4442 or 4443 to use or operate the engine on any forest-covered, brush-covered, or grass-covered land unless the engine is equipped with a spark arrester, as defined in Section 4442, maintained in effective working order or the engine is constructed, equipped, and maintained for the prevention of fire.

The enclosed engine owner's manual is supplied for information regarding the US Environmental Protection Agency (EPA) and the California Emission Control Regulation of emission systems, maintenance, and warranty. Replacements may be ordered through the engine manufacturer.

⚠ WARNING

CALIFORNIA
Proposition 65 Warning

Diesel engine exhaust and some of its constituents are known to the State of California to cause cancer, birth defects, and other reproductive harm.

Battery posts, terminals, and related accessories contain lead and lead compounds, chemicals known to the State of California to cause cancer and reproductive harm. Wash hands after handling.

Use of this product may cause exposure to chemicals known to the State of California to cause cancer, birth defects, or other reproductive harm.

Introduction

This machine is a ride-on, reel-blade lawn mower intended to be used by professional, hired operators in commercial applications. It is primarily designed for cutting grass on well-maintained turf. Using this product for purposes other than its intended use could prove dangerous to you and bystanders.

Read this information carefully to learn how to operate and maintain your product properly and to avoid injury and product damage. You are responsible for operating the product properly and safely.

Visit www.Toro.com for more information, including safety tips, training materials, accessory information, help finding a dealer, or to register your product.

Whenever you need service, genuine Toro parts, or additional information, contact an Authorized Service Dealer or Toro Customer Service and have the model and serial numbers of your product ready. Figure 1 identifies the location of the model and serial numbers on the product. Write the numbers in the space provided.

Important: **With your mobile device, you can scan the QR code on the serial number plate (if equipped) to access warranty, parts, and other product information.**

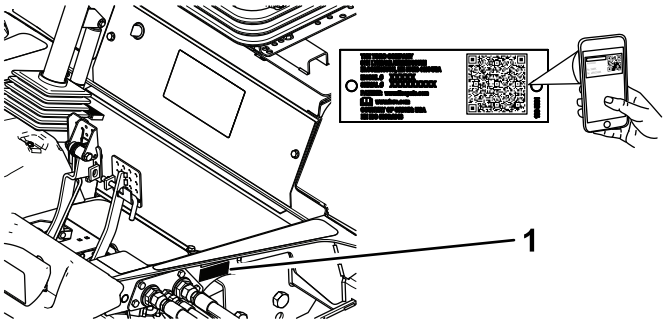

g233760

Figure 1

1. Model and serial number location

Model No. _____

Serial No. _____

This manual identifies potential hazards and has safety messages identified by the safety-alert symbol (Figure 2), which signals a hazard that may cause serious injury or death if you do not follow the recommended precautions.



g000502

Figure 2
Safety-alert symbol

This manual uses 2 words to highlight information. **Important** calls attention to special mechanical information and **Note** emphasizes general information worthy of special attention.

© 2018—The Toro® Company
8111 Lyndale Avenue South
Bloomington, MN 55420

Contact us at www.Toro.com.
Printed in the USA
All Rights Reserved

Contents

Safety 4
General Safety 4
Engine-Emission Certification 4
Safety and Instructional Decals 4
Setup 11
1 Adjusting the Support Rollers 12
2 Installing the Hood Lock for CE Compliance 12
3 Installing the Cutting Units 13
4 Adjusting the Turf-Compensation Spring 17
5 Using the Cutting-Unit Kickstand 17
6 Greasing the Machine 18
7 Checking the Fluid Levels 19
8 Using the Gauge Bar 19
9 Applying the CE Decals 19
Product Overview 20
Controls 20
Specifications 27
Traction Unit Specifications 27
Attachments/Accessories 27
Before Operation 27
Before Operation Safety 27
Performing Daily Maintenance 28
Filling the Fuel Tank 28
During Operation 29
During Operation Safety 29
Starting the Engine 30
Shutting Off the Engine 30
Adjusting the Lift-Arm Counterbalance 30
Adjusting the Lift-Arm Turnaround Position 31
Folding the Roll Bar 31
Checking the Interlock Switches 32
Operating Tips 33
After Operation 33
After Operation Safety 33
Hauling the Machine 33
Identifying the Tie-Down Points 33
Locating the Jacking Points 34
Pushing or Towing the Machine 34
Maintenance 36
Maintenance Safety 36
Recommended Maintenance Schedule(s) 36
Daily Maintenance Checklist 38
Lubrication 39
Greasing the Bearings and Bushings 39
Engine Maintenance 41
Engine Safety 41
Servicing the Air Cleaner 41
Checking the Level of the Engine Oil 42
Servicing the Engine Oil and Filter 43
Adjusting the Throttle 44
Fuel System Maintenance 45
Draining the Fuel Tank 45
Checking the Fuel Lines and Connections 45
Servicing the Water Separator 45
Cleaning the Fuel-Intake Screen 45
Electrical System Maintenance 46
Electrical System Safety 46
Charging and Connecting the Battery 46
Servicing the Battery 47
Checking the Fuses 47
Drive System Maintenance 48
Checking the Tire Pressure 48
Checking the Torque of the Wheel Nuts 48
Checking for End-Play in the Planetary Drives 48
Checking the Planetary Gear-Drive Lubricant 48
Changing the Planetary-Gear-Drive Oil 49
Checking the Oil Level of the Rear Axle 50
Changing the Oil in the Rear Axle 51
Checking the Lubricant in the Gear Box of the Rear Axle 51
Adjusting the Traction Drive for Neutral 51
Checking the Rear-Wheel Toe-In 52
Cooling System Maintenance 53
Cooling System Safety 53
Checking the Cooling System 53
Servicing the Engine Cooling System 53
Brake Maintenance 55
Adjusting the Service Brakes 55
Belt Maintenance 55
Servicing the Alternator Belt 55
Hydraulic System Maintenance 56
Hydraulic System Safety 56
Checking the Hydraulic Lines and Hoses 56
Checking the Level of the Hydraulic Fluid 56
Hydraulic Fluid Specifications 56
Hydraulic Fluid Capacity 57
Changing the Hydraulic Fluid 57
Replacing the Hydraulic Filters 57
Cutting Unit Maintenance 59
Blade Safety 59
Backlapping the Cutting Units 59
Cleaning 60
Washing the Machine 60
Storage 61
Storage Safety 61
Preparing the Traction Unit 61
Preparing the Engine 61

Safety

This machine has been designed in accordance with EN ISO 5395 (when you complete the setup procedures) and ANSI B71.4-2017.

General Safety

This product is capable of amputating hands and feet and of throwing objects.

- Read and understand the contents of this *Operator's Manual* before starting the engine.
- Use your full attention while operating the machine. Do not engage in any activity that causes distractions; otherwise, injury or property damage may occur.
- Do not put your hands or feet near moving components of the machine.
- Do not operate the machine without all guards and other safety protective devices in place and functioning properly on the machine.
- Keep bystanders and children out of the operating area. Never allow children to operate the machine.
- Shut off the engine, remove the key (if equipped), and wait for all movement to stop before you leave the operator's position. Allow the machine to cool before adjusting, servicing, cleaning, or storing it.

Improperly using or maintaining this machine can result in injury. To reduce the potential for injury, comply with these safety instructions and always pay attention to the safety-alert symbol ⚠, which means Caution, Warning, or Danger—personal safety instruction. Failure to comply with these instructions may result in personal injury or death.

Engine-Emission Certification

The engine in this machine is EU Stage 3b compliant.

Safety and Instructional Decals

Safety decals and instructions are easily visible to the operator and are located near any area of potential danger. Replace any decal that is damaged or missing.

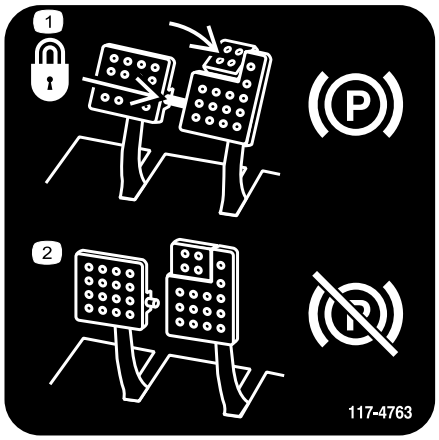

decal117-4763

117-4763

1. To engage the parking brake, secure the brake pedals with the locking pin, press the parking-brake pedals and engage the toe pedal.
2. To disengage the parking brake, disengage the locking pin and release the pedals.

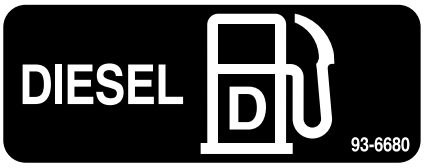

decal93-6680

93-6680

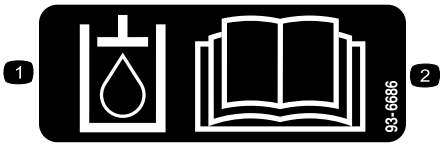

decal93-6686

93-6686

1. Hydraulic fluid
2. Read the *Operator's Manual*.

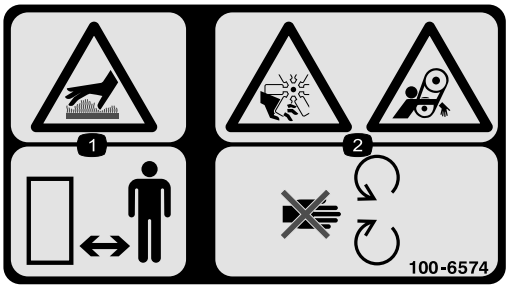

decal100-6574

100-6574

1. Hot surface hazard—keep bystanders away.
2. Severing hazard of hand, impeller; entanglement hazard, belt—keep away from moving parts.

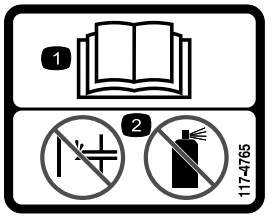

decal117-4765

117-4765

1. Read the *Operator's Manual.*
2. Do not use starting aids.

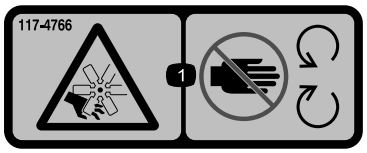

decal117-4766

117-4766

1. Cutting/dismemberment hazard; fan—stay away from moving parts, keep all guards and shields in place.



decal106-6755

106-6755

1. Engine coolant under pressure.
2. Explosion hazard—read the *Operator's Manual.*
3. Warning—do not touch the hot surface.
4. Warning—read the *Operator's Manual.*



decal98-4387

98-4387

1. Warning—wear hearing protection.

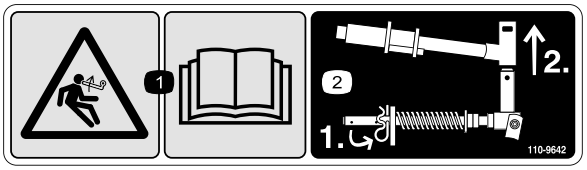

decal110-9642

110-9642

1. Stored energy hazard—read the *Operator's Manual.*
2. Move the cotter pin to the hole closest to the rod bracket and then remove the lift arm and pivot yoke.

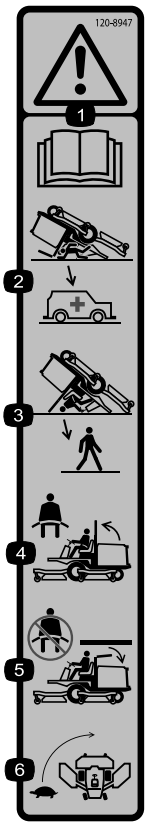

decal120-8947

120–8947

1. Warning—read the *Operator's Manual*.
2. There is no rollover protection when the roll bar is down.
3. There is rollover protection when the roll bar is up.
4. If the roll bar is raised, wear the seat belt.
5. If the roll bar is lowered, do not wear the seat belt.
6. Drive slowly when turning.

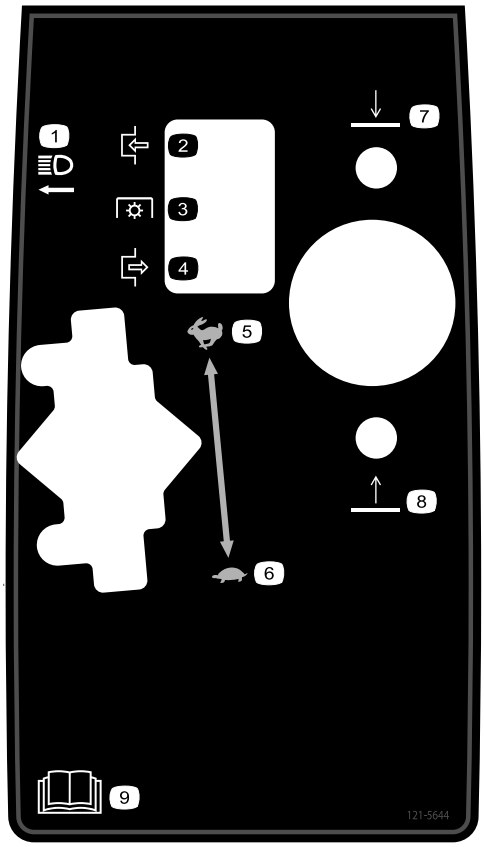

decal121-5644

121–5644

1. Light switch
2. Engage
3. Power take-off
4. Disengage
5. Fast
6. Slow
7. Lower
8. Raise
9. Read the *Operator's Manual*.

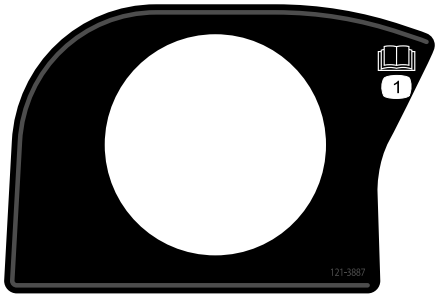

decal121-3887

121–3887

1. Read the *Operator's Manual*.

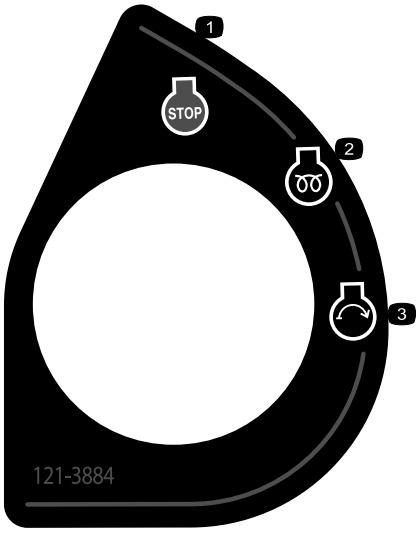

decal121-3884

121–3884

1. Engine—stop
2. Engine—preheat
3. Engine—start

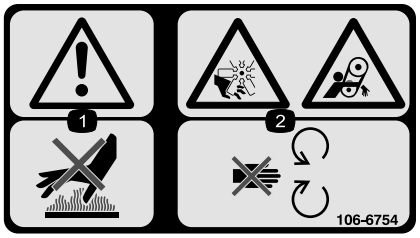

decal106-6754

106-6754

1. Warning—do not touch the hot surface.
2. Cutting/dismemberment hazard, fan; entanglement hazard, belt—stay away from moving parts.

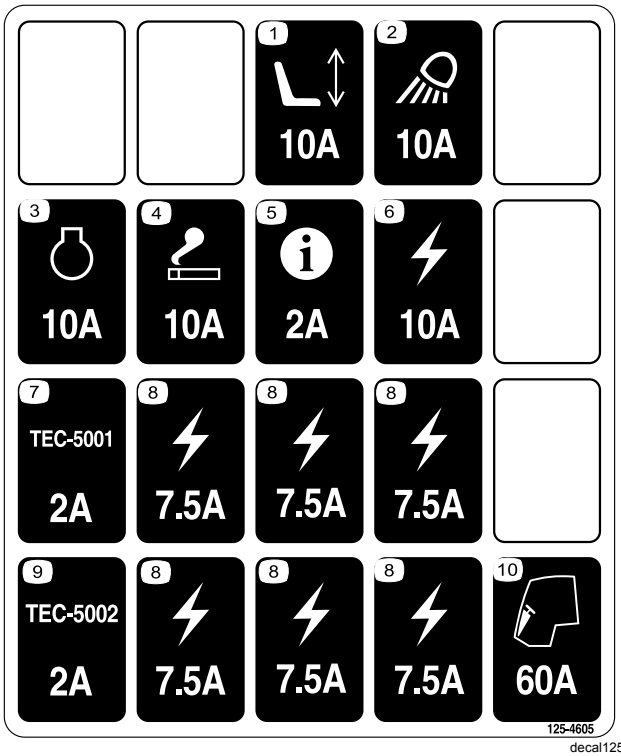

decal125-4605

125-4605

1. Power seat
2. Work light
3. Engine
4. Lighter
5. InfoCenter
6. Electric
7. Controller
8. Electric
9. Controller
10. Cab

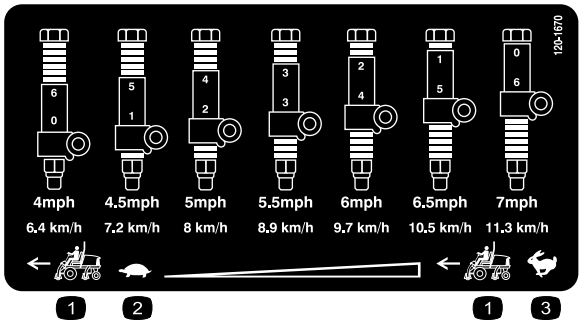

decal120-1670

120-1670

1. Traction unit speed
2. Slow
3. Fast



decalbatterysymbols

Battery Symbols

Some or all of these symbols are on your battery.

1. Explosion hazard
2. No fire, open flame, or smoking
3. Caustic liquid/chemical burn hazard
4. Wear eye protection.
5. Read the *Operator's Manual*.
6. Keep bystanders away from the battery.
7. Wear eye protection; explosive gases can cause blindness and other injuries.
8. Battery acid can cause blindness or severe burns.
9. Flush eyes immediately with water and get medical help fast.
10. Contains lead; do not discard



decal133-8062

133-8062

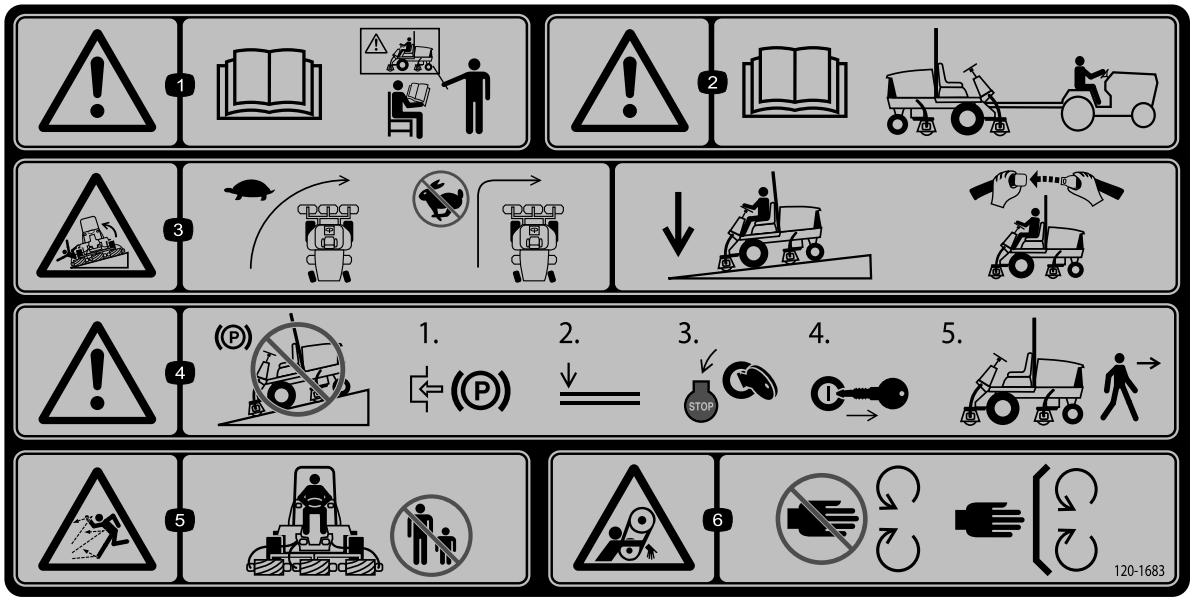

decal120-1683

120-1683

1. Warning—read the *Operator's Manual*; do not operate the machine unless you have received training.
2. Warning—read the *Operator's Manual* before towing the machine.
3. Tipping hazard—slow machine before turning, do not turn at high speeds; lower the cutting units when driving down slopes; use a roll over protection system and wear the seat belt.
4. Warning—do not park the machine on slopes; engage the parking brake, lower the cutting units, shut off the engine, and remove the ignition key before leaving the machine.
5. Thrown object hazard—keep bystanders out of the operating area.
6. Entanglement hazard, belt—stay away from moving parts, keep all guards and shields in place.

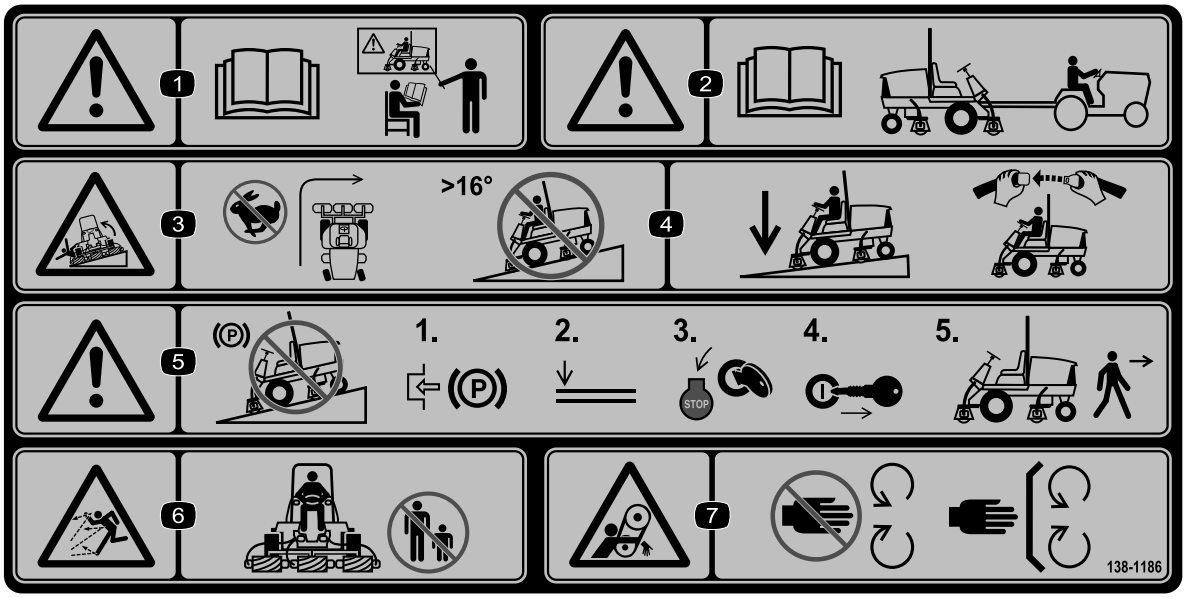

decal138-1186

138-1186

(Affix over Part No. 120-1683 for CE)

Note: This machine complies with the industry standard stability test in the static lateral and longitudinal tests with the maximum recommended slope indicated on the decal. Review the instructions for operating the machine on slopes in the *Operator's Manual* as well as the conditions in which you would operate the machine to determine whether you can operate the machine in the conditions on that day and at that site. Changes in the terrain can result in a change in slope operation for the machine. If possible, keep the cutting units lowered to the ground while operating the machine on slopes. Raising the cutting units while operating on slopes can cause the machine to become unstable.

1. Warning—read the *Operator's Manual*; do not operate this machine unless you are trained.
2. Warning—read the *Operator's Manual* before towing the machine.
3. Tipping hazard—do not turn at high speeds; do not drive up or down slopes greater than 16° .
4. Lower the cutting units when driving down slopes; use a roll-over protection system and wear the seatbelt.
5. Warning—do not park the machine on slopes; engage the parking brake, lower the cutting units, shut off the engine, and remove the ignition key before leaving the machine.
6. Thrown object hazard—keep bystanders away.
7. Entanglement hazard, belt—stay away from moving parts; keep all guards and shields in place.

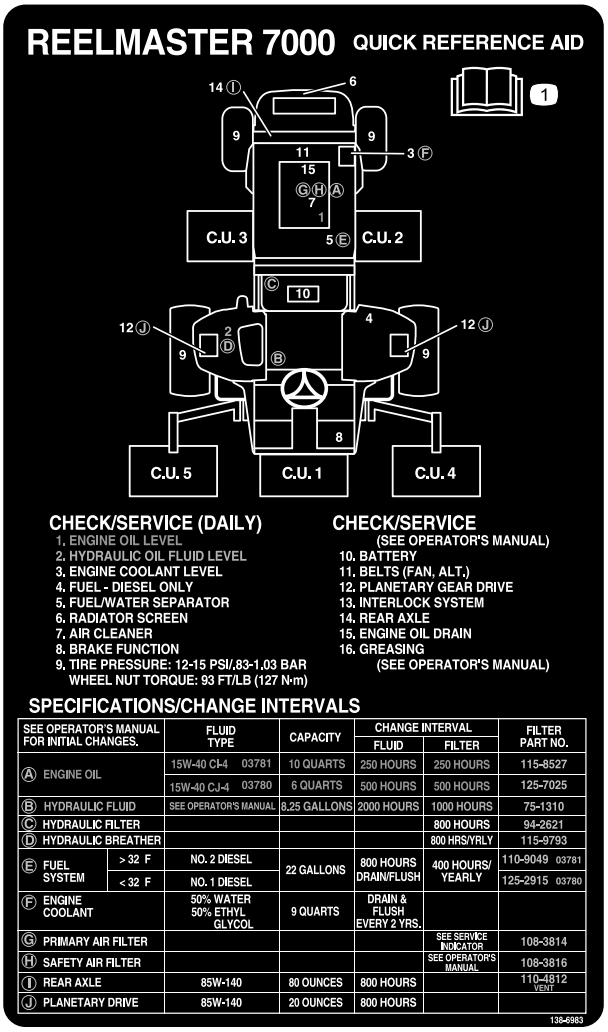

decal138-6983

138-6983

1. Read the *Operator's Manual*.

Setup

Loose Parts

Use the chart below to verify that all parts have been shipped.

Procedure	Description	Qty.	Use
1	No parts required	–	Adjust the support rollers.
2	Hood-lock bracket Rivet Screw (1/4 x 2 inch) Flat washer (1/4 inch) Locknut (1/4 inch)	1 2 1 2 1	Install the hood lock for European CE compliance.
3	Front hose guide (right) Front hose guide (left)	1 1	Install the cutting units.
4	No parts required	–	Adjust the turf-compensation spring.
5	Cutting-unit kickstand	1	Use the cutting-unit kickstand.
6	No parts required	–	Grease the machine.
7	No parts required	–	Check the levels of the rear axle lubricant, hydraulic fluid, and engine oil.
8	Gauge bar	1	Use the gauge bar to adjust the cutting unit.
9	Warning decal CE decal Production year decal	1 1 1	Apply the CE decals.

Media and Additional Parts

Description	Qty.	Use
Operator's Manual	1	Read the manual before operating the machine.
Engine owner's manual	1	Read the manual before operating the engine.
Declaration of Conformity	1	This document indicates CE compliance.

Note: Determine the left and right sides of the machine from the normal operating position.

1

Adjusting the Support Rollers

No Parts Required

Procedure

Depending on what width cutting units are to be installed on the traction unit, adjust the support rollers as follows:

Park the machine on a level surface, engage the parking brake, shut off the engine, and remove the key.

- If you are using 27-inch cutting units, install the rollers in the upper mounting holes of the support assembly channels (Figure 3).
- If you are using 32-inch cutting units, install the rollers in the lower mounting holes of the support assembly channels (Figure 3).

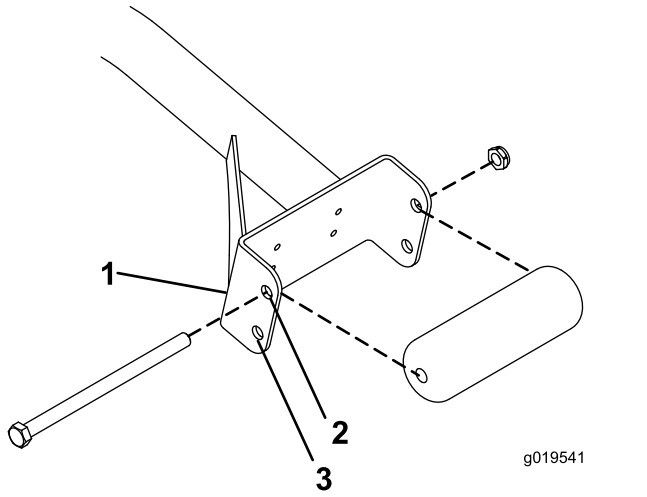

Figure 3

1. Support assembly channel
2. Use this hole for 27-inch cutting units.
3. Use this hole for 32-inch cutting units.

2

Installing the Hood Lock for CE Compliance

Parts needed for this procedure:

1	Hood-lock bracket
2	Rivet
1	Screw (1/4 x 2 inch)
2	Flat washer (1/4 inch)
1	Locknut (1/4 inch)

Procedure

1. Unhook the hood latch from the hood-latch bracket (Figure 4).

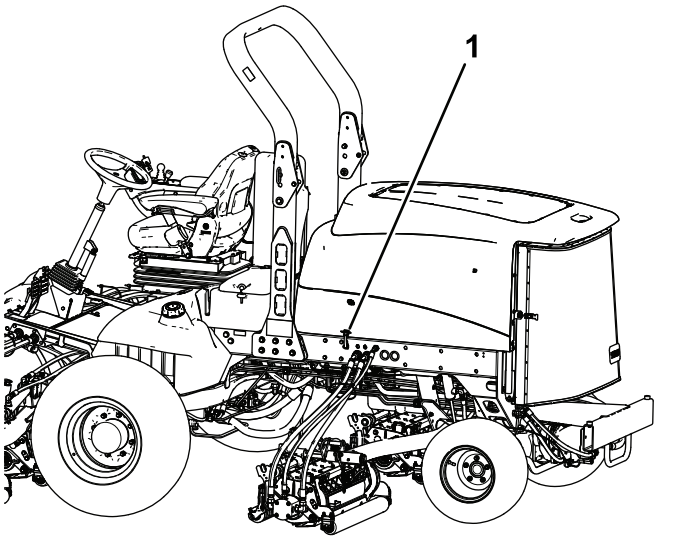

Figure 4

1. Hood latch

2. Remove the 2 rivets securing the hood-latch bracket to the hood (Figure 5).

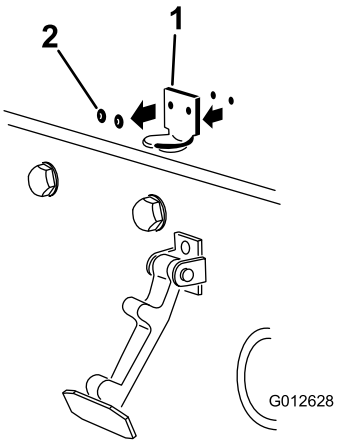

g012628

Figure 5

1. Hood-latch bracket
2. Rivets

3. Remove the hood-latch bracket from the hood.
4. While aligning the mounting holes, position the CE lock bracket and the hood-latch bracket onto the hood.

   Note: The lock bracket must be against the hood (Figure 5).

   Do not the remove bolt-and-nut assembly from the lock-bracket arm.

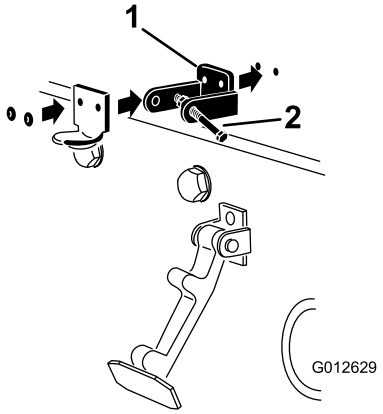

g012629

Figure 6

1. CE lock bracket
2. Bolt-and-nut assembly

5. Align the washers with the holes on the inside of the hood.
6. Rivet the brackets and the washers to the hood (Figure 6).
7. Hook the latch onto the hood-latch bracket (Figure 7).

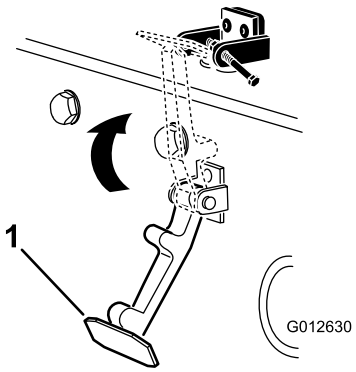

g012630

Figure 7

1. Hood latch

8. Screw the bolt into the other arm of hood-lock bracket to lock the latch in position (Figure 8).

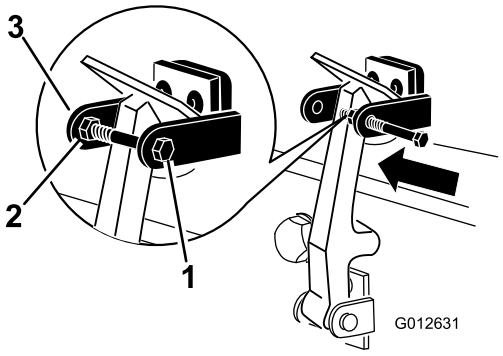

g012631

Figure 8

1. Bolt
2. Nut
3. Arm of the hood-lock bracket

9. Tighten the bolt securely but do not tighten the nut.

3

Installing the Cutting Units

Parts needed for this procedure:

1	Front hose guide (right)
1	Front hose guide (left)

Procedure

1. Remove the reel motors from the shipping brackets.
2. Remove and discard the shipping brackets.
3. Remove the cutting units from the cartons.

4. Assemble and adjust as described in the cutting unit *Operator's Manual*.
5. Make sure that the counter weight (Figure 9) is installed to the proper end of the cutting unit as described in the cutting unit *Operator's Manual*.

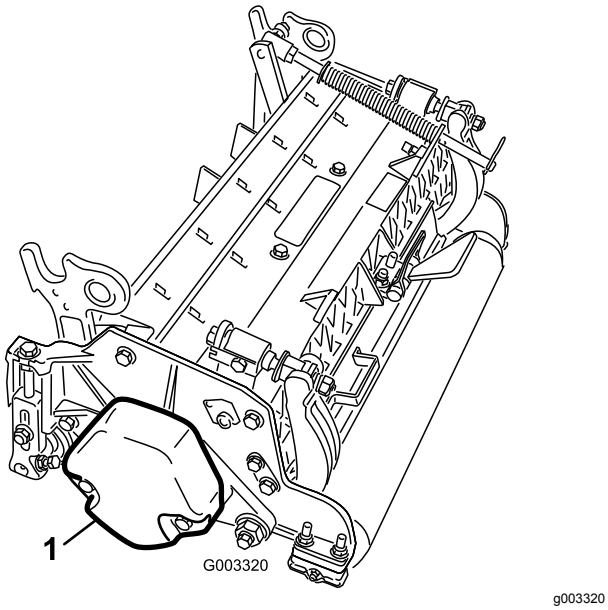

Figure 9

1. Counter weight

6. Ensure that the turf-compensation spring is mounted to the same side as the reel drive motor on every cutting unit. To change the position of the spring, do the following steps:
   A. Remove the 2 carriage bolts and nuts securing the rod bracket to the cutting-unit tabs (Figure 10).

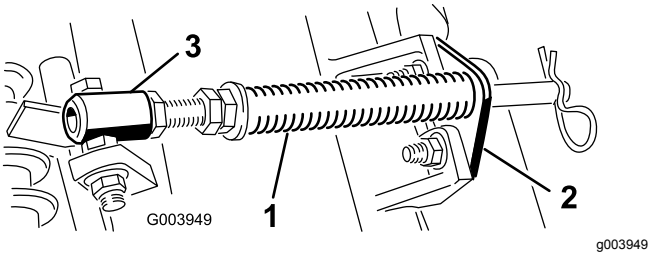

Figure 10

1. Turf-compensation spring
2. Rod bracket
3. Spring tube

   B. Remove the flange nut securing the spring-tube bolt to the carrier-frame tab (Figure 10)
   C. Remove the assembly.
   D. Mount the spring-tube bolt to the opposite tab on the carrier frame and secure with the flange nut.

Note: Position the bolt head to the outer side of the tab as shown in Figure 11.

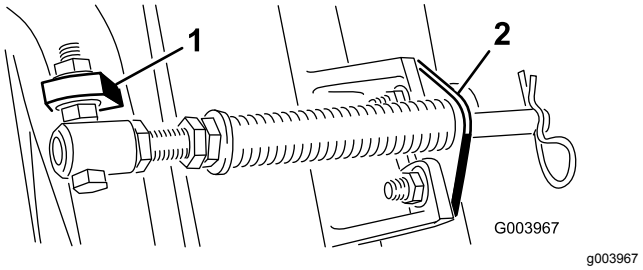

Figure 11

1. Opposite carrier frame tab
2. Rod bracket

   E. Mount the rod bracket to the cutting unit tabs with the carriage bolts and nuts (Figure 11). On the cutting unit, mount the left hose guide to the front of the cutting unit tabs when installing the rod bracket (Figure 13).

   Important: **On Cutting Unit 4 (left front) and Cutting Unit 5 (right front), use the rod-bracket mounting nuts to install the hose guides to the front of the cutting-unit tabs. The hose guides should lean toward the center cutting unit (Figure 12 through Figure 14).**

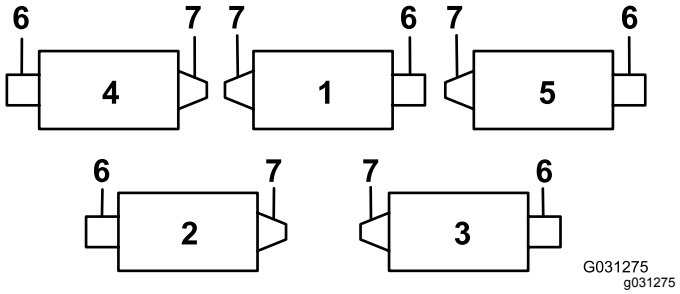

Figure 12

1. Cutting unit 1
2. Cutting unit 2
3. Cutting unit 3
4. Cutting unit 4
5. Cutting unit 5
6. Reel motor
7. Weight

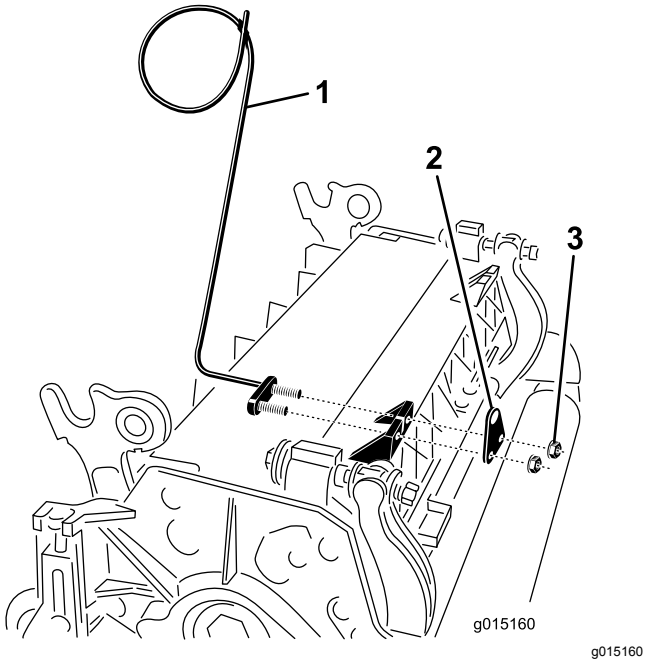

Figure 13

1. Hose guide (left side shown)
2. Rod bracket
3. Nuts

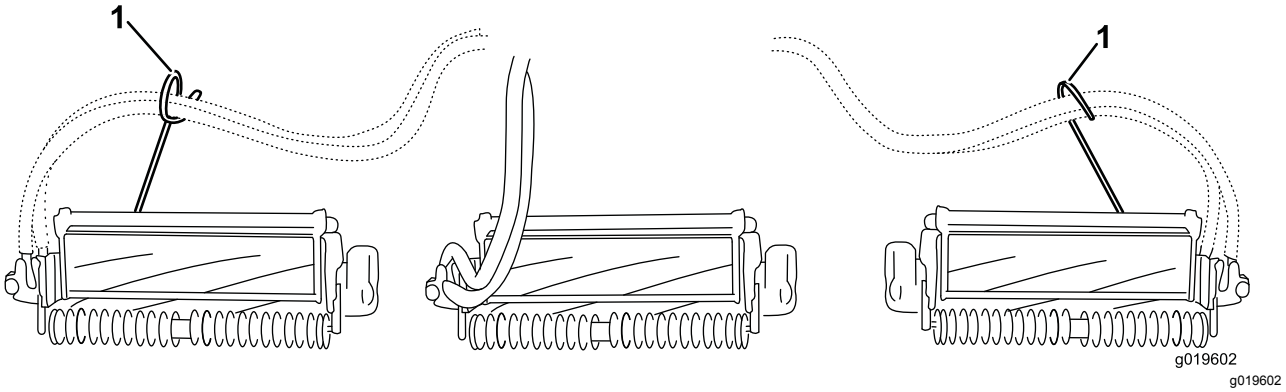

Figure 14

1. Hose guides (each must lean toward the center cutting unit)

Note: When installing or removing the cutting units, make sure that the hairpin cotter is installed in the spring-rod hole next to the rod bracket. Otherwise, you must install the hairpin cotter in the hole in the end of the rod.

7. Increase the steering on the rear cutting units by removing the 2 pivot spacers, hex-socket screws, and flange locknuts (Figure 15) from the carrier frames of the rear cutting units (Cutting Units 2 and 3); refer to Figure 12.

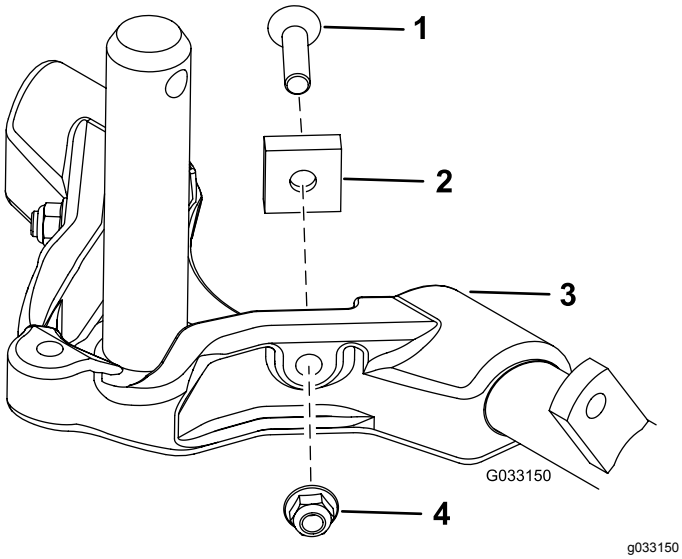

Figure 15

1. Hex-socket screw
2. Pivot spacer
3. Carrier frame
4. Flange locknut

8. Lower all the lift arms completely.
9. Coat the carrier-frame shaft with clean grease (Figure 16).

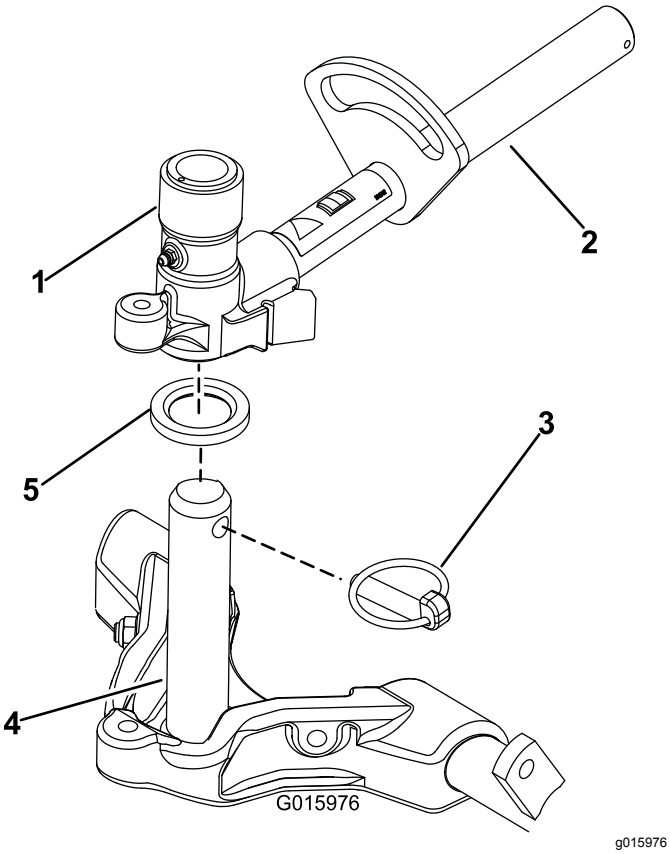

Figure 16

1. Lift-arm pivot yoke
2. Lift arm
3. Klik pin
4. Carrier-frame shaft
5. Thrust washer

10. For the front cutting units, slide a cutting unit under the lift arm while inserting the shaft of the carrier frame up into the lift-arm pivot yoke (Figure 16).

    Make sure that the thrust washer is in position on the carrier-frame shaft.
11. Secure the carrier-frame shaft to the lift-arm yoke with the klik pin (Figure 16).
12. To lock (fix) the steering on the cutting units, secure the pivot yoke to the carrier frame with the snapper pin (Figure 17).

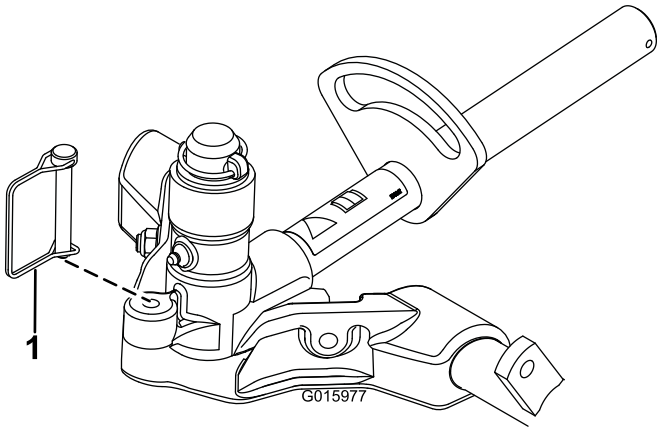

Figure 17

1. Snapper pin

Note: Use fixed steering when cutting on side hills.

13. Use the following procedure on the rear cutting units when the height of cut is above 19 mm (3/4 inch).
    A. Remove the lynch pin and washer securing the lift-arm pivot shaft to the lift arm and slide the lift-arm pivot shaft out of the lift arm (Figure 18).

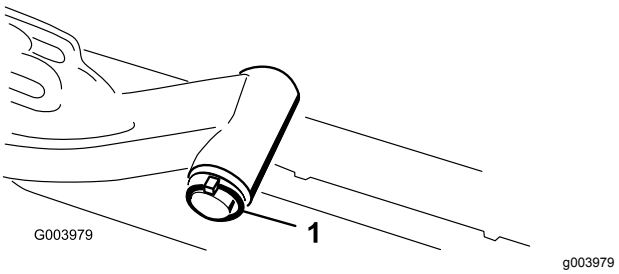

Figure 18

1. Lift-arm pivot-shaft lynch pin and washer

    B. Insert the lift-arm yoke onto the carrier frame shaft (Figure 16).
    C. Insert the lift-arm shaft into the lift arm and secure it with the washer and the lynch pin (Figure 18).

14. Secure the lift-arm chain to the chain bracket with the snapper pin (Figure 19).

    Note: Use the number of chain links described in the cutting unit *Operator's Manual*.

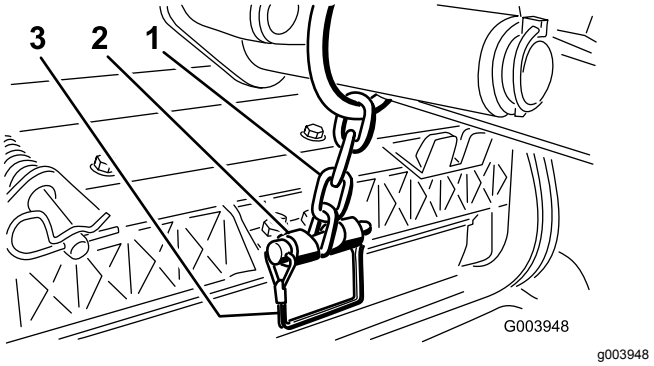

Figure 19

1. Lift-arm chain
2. Chain bracket
3. Snapper pin

15. Coat the spline shaft of the reel motor with clean grease.
16. Oil the reel motor O-ring and install it onto the motor flange.
17. Install the motor by rotating it clockwise so that the motor flanges clear the bolts (Figure 20).

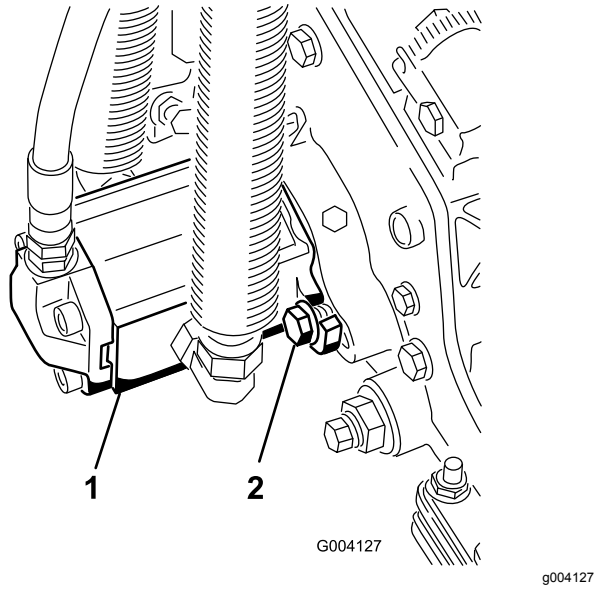

Figure 20

1. Reel-drive motor
2. Mounting bolts

18. Rotate the motor counterclockwise until the flanges encircle the bolts, and then tighten the bolts.

    Important: **Make sure that the reel motor hoses are not twisted, kinked, or at risk of being pinched.**

4

Adjusting the Turf-Compensation Spring

No Parts Required

Procedure

The turf-compensation spring (Figure 21) transfers the weight from the front to the rear roller. This helps to reduce a wave pattern in the turf, also known as marcelling or bobbing.

Important: **Make spring adjustments with the cutting unit mounted to the traction unit, positioned straight ahead and lowered to the shop floor.**

1. Make sure that the hairpin cotter is installed in the rear hole in the spring rod (Figure 21).

   Note: When servicing the cutting unit, move the hairpin cotter to the spring-rod hole next to the turf-compensation spring.

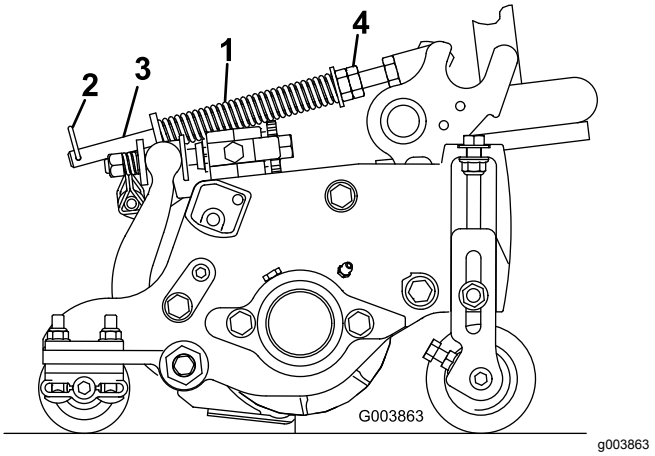

Figure 21

1. Turf-compensation spring
2. Hairpin cotter
3. Spring rod
4. Hex nuts

2. Tighten the hex nuts on the front end of the spring rod until the compressed length of the spring is 15.9 cm (6.25 inches); refer to Figure 21.

   Note: When operating on rough terrain, decrease the spring length by 13 mm (1/2 inch). Ground following will be slightly decreased.

   Note: You will need to reset the turf compensation setting if you change either the HOC or aggressiveness-of-cut setting.

5

Using the Cutting-Unit Kickstand

Parts needed for this procedure:

1	Cutting-unit kickstand

Procedure

Whenever you tip the cutting unit to expose the bedknife/reel, prop up the rear of the cutting unit with the kickstand to make sure that the nuts on the back end of the bedbar adjusting screws are not resting on the work surface (Figure 22).

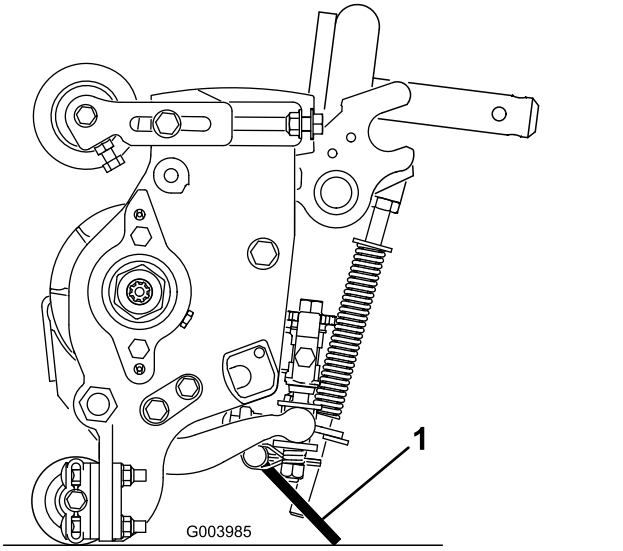

g003985

Figure 22

1. Cutting unit kickstand

Secure the kickstand to the chain bracket with the snapper pin (Figure 23).

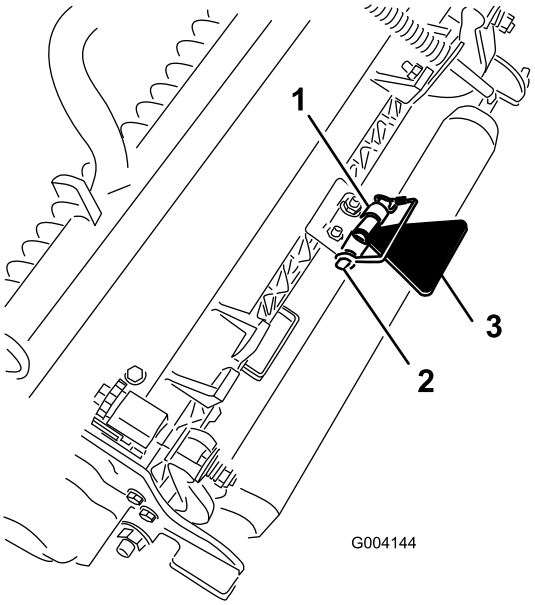

g004144

Figure 23

1. Chain bracket
2. Snapper pin
3. Cutting-unit kickstand

6

Greasing the Machine

No Parts Required

Procedure

Before operating the machine, apply grease to ensure proper lubrication. Refer to Lubrication (page 39). Failure to properly grease the machine will result in premature failure of critical parts.

7

Checking the Fluid Levels

No Parts Required

Procedure

1. Check the level of the rear axle lubricant before starting the engine for the first time, refer to Checking the Oil Level of the Rear Axle (page 50).
2. Check the level of the hydraulic fluid before starting the engine for the first time, refer to Checking the Level of the Hydraulic Fluid (page 56).
3. Check the level of the engine oil before and after starting the engine for the first time, refer to Checking the Level of the Engine Oil (page 42).

8

Using the Gauge Bar

Parts needed for this procedure:

1	Gauge bar

Procedure

Use the gauge bar to adjust the cutting unit. Refer to the cutting unit *Operator's Manual* for the adjustment procedures (Figure 24).

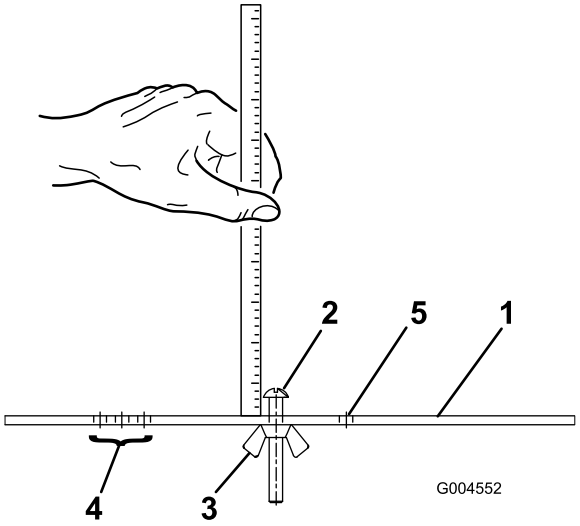

Figure 24

1. Gauge bar
2. Height-adjusting screw
3. Nut
4. Holes used for setting the groomer height of groom (HOG)
5. Hole not used

9

Applying the CE Decals

Parts needed for this procedure:

1	Warning decal
1	CE decal
1	Production year decal

Procedure

On machines requiring CE compliance, apply the production year decal (Part No. 133-5615) near the serial plate, the CE decal (Part No. 93-7252) near the hood lock, and the CE warning decal (Part No. 138-1186) over the standard warning decal (Part No. 120-1683).

Product Overview

Controls

Brake Pedals

The 2 foot pedals (Figure 25) operate individual wheel brakes for turning assistance and to aid in obtaining better side hill traction.

Pedal-Locking Latch

The pedal-locking latch (Figure 25) connects the pedals together to engage the parking brake.

Parking-Brake Pedal

To engage the parking brake, (Figure 25) connect the pedals together with the pedal-locking latch, push down on the right brake pedal while engaging the toe pedal. To release the parking brake, press 1 of the brake pedals until the parking-brake latch retracts.

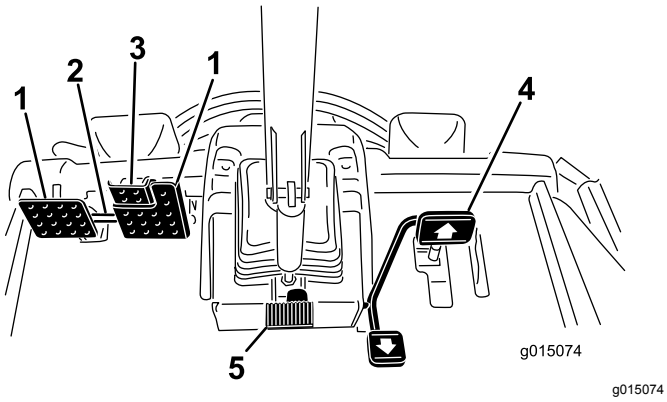

Figure 25

1. Brake pedal
2. Pedal-locking latch
3. Parking-brake pedal
4. Traction pedal
5. Tilt-steering pedal

Traction Pedal

The traction pedal (Figure 25) controls forward and reverse operation. Press the top of the pedal to move forward and the bottom to move backward. Ground speed is determined by how far you press the pedal. For maximum ground speed, fully press the pedal while the throttle is in the FAST position.

To stop the machine, reduce your foot pressure on the traction pedal and allow it to return to the center position.

Tilt Steering Pedal

To tilt the steering wheel towards you, press the foot pedal (Figure 25) down, and pull the steering tower toward you to the most comfortable position and then release the pedal.

Mow-Speed Limiter

When the mow-speed limiter (Figure 26) is flipped up it will control the mow speed and allow the cutting units to be engaged. Each spacer adjusts the mowing speed by 0.8 km/h (0.5 mph). The more spacers that there are on the top of the bolt, the slower the machine moves. To transport the machine, flip back the mow-speed limiter for maximum transport speed.

Speed-Limiter Screws

Adjust the screw(s) (Figure 26) to limit the amount that you can press the traction pedal forward or reverse to limit the speed.

Important: **The speed-limiter screw must stop the traction pedal before the pump reaches full stroke; otherwise, damage to the pump may occur.**

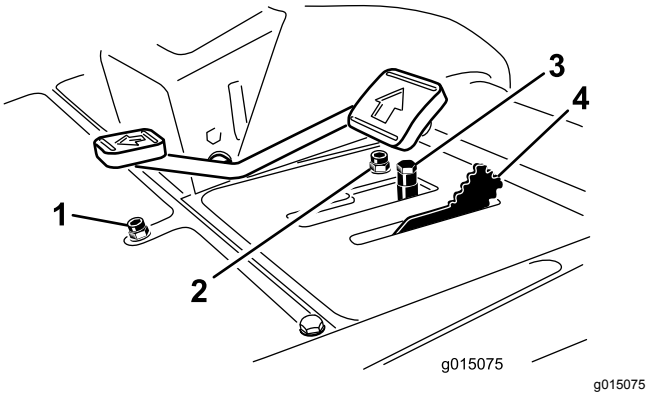

Figure 26

1. Reverse speed limiter screw
2. Forward speed limiter screw
3. Spacers
4. Mow speed limiter

Lower Mow/Raise Control Lever

This lever (Figure 27) raises and lowers the cutting units and also starts and stops the reels when you enable the reels in the mow mode. You cannot lower the cutting units when the mow/transport lever is in the transport position.

Key Switch

The key switch (Figure 27) has 3 positions: OFF, ON/PREHEAT, and START.

InfoCenter

The InfoCenter LCD display shows information about the machine, such as the operating status, various diagnostics, and other information (Figure 27).

PTO Switch

The PTO switch (Figure 27) has 2 positions: START and STOP. Push the PTO button forward to engage the cutting-unit blades. Push the button back to disengage the cutting-unit blades.

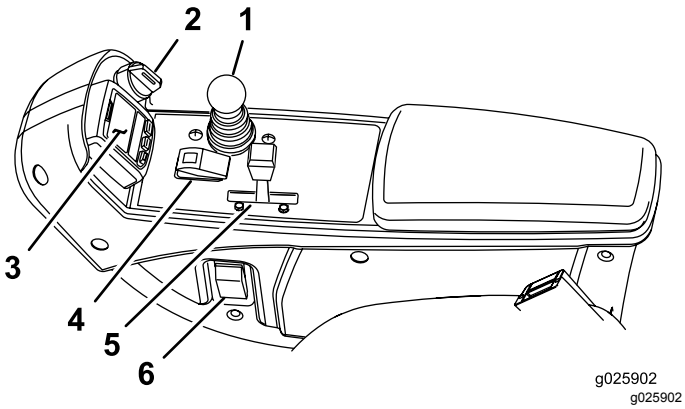

Figure 27

1. Lower mow/raise control lever
2. Key switch
3. InfoCenter
4. PTO switch
5. Engine-speed switch
6. Headlight switch

Engine-Speed Switch

Move the engine-speed switch (Figure 27) forward to increase the engine speed and rearward to decrease speed.

Headlight Switch

Pivot the switch downward to turn on the headlights (Figure 27).

Power Point

Use the power point (Figure 28) to power optional 12 V electrical accessories.

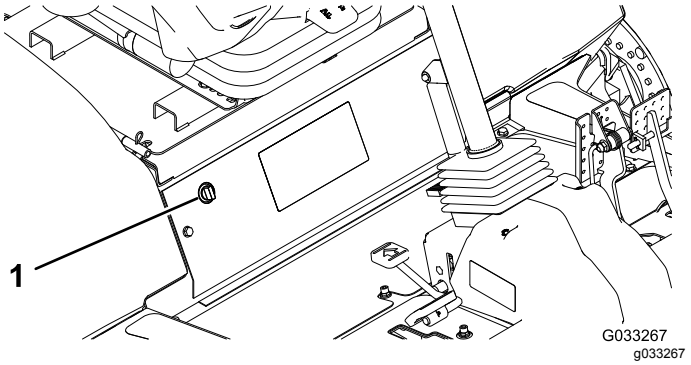

Figure 28

1. Power point

Bag Holder

Use the bag holder (Figure 29) for storage.

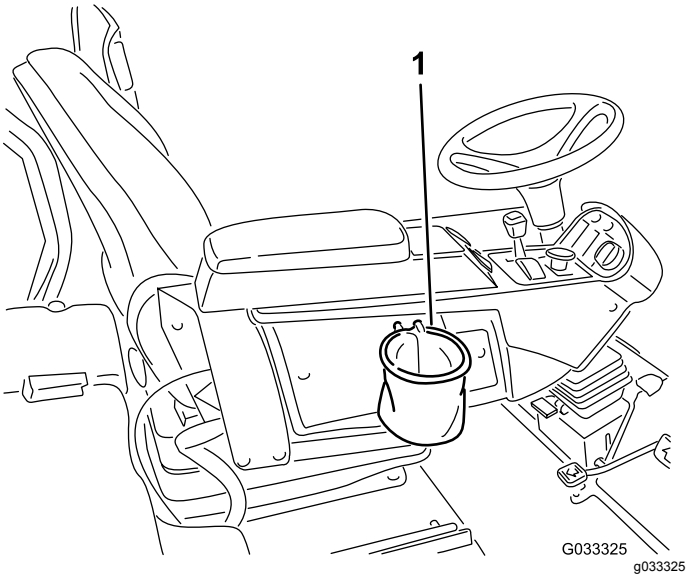

Figure 29

1. Bag holder

Backlap Levers

Use the backlap levers for backlapping the reels (Figure 30).

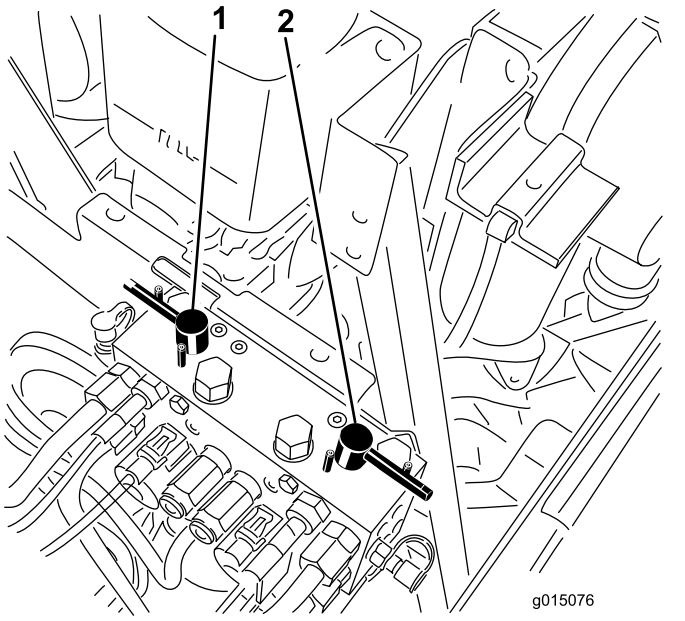

Figure 30

1. Front backlap lever
2. Rear backlap lever

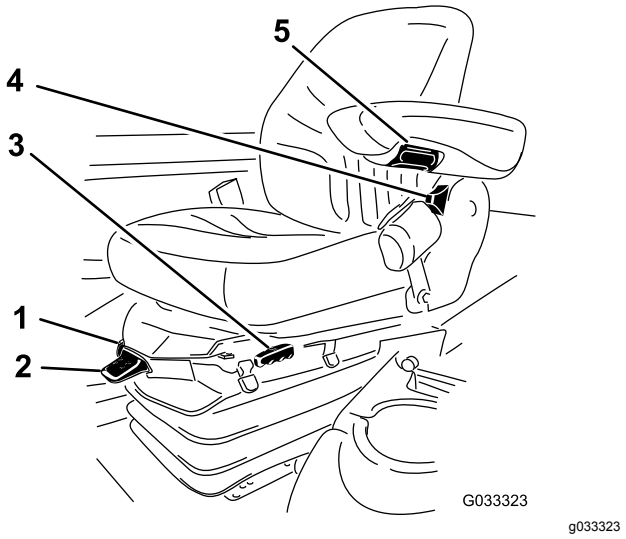

Figure 31

1. Weight gauge
2. Weight adjusting lever
3. Seat adjusting lever
4. Seat back adjusting lever
5. Armrest adjusting knob

Adjusting the Seat

Seat Adjusting Lever

Pull out on the lever to slide the seat forward or rearward (Figure 31).

Seat Armrest Adjusting Knob

Rotate the knob to adjust the seat armrest angle (Figure 31).

Seat Back Adjusting Lever

Move the lever to adjust the seat back angle (Figure 31).

Weight Gauge

The weight gauge indicates when the seat is adjusted to your weight (Figure 31). You can adjust the height by positioning the suspension within the range of the green region.

Weight Adjusting Lever

Adjust the seat to your weight (Figure 31). Pull up the lever to increase the air pressure and push it down to decrease the air pressure. You attain the proper adjustment when the weight gauge is in the green region.

Using the InfoCenter LCD Display

The InfoCenter LCD display shows information about your machine, such as the operating status, various diagnostics, and other information (Figure 32) There is a splash screen and main information screen of the InfoCenter. You can switch between the splash screen and main information screen at any time by pressing any of the InfoCenter buttons and then selecting the appropriate directional arrow.

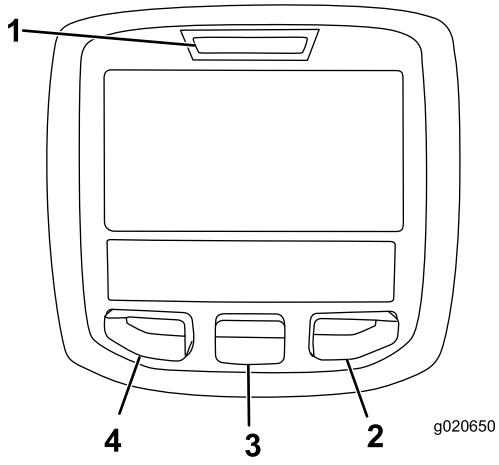

g020650

Figure 32

1. Indicator light
2. Right button
3. Middle button
4. Left button

- Left Button, Menu Access/Back Button—press this button to access the InfoCenter menus. You can use it to back out of any menu you are currently using.
- Middle Button—use this button to scroll down menus.
- Right Button—use this button to open a menu where a right arrow indicates additional content.
- Manual Fan Reversal—press the left and right buttons simultaneously to activate this feature.
- Beeper—activates when lowering the decks or for advisories and faults

  Note: The purpose of each button may change depending on what is required at the time. Each button is labeled with an icon displaying its current function.

InfoCenter Icon Description

SERVICE DUE	Indicates when scheduled service should be performed
	Hours remaining until service
	Reset the service hours
	Info icon
	Hour Meter
	Fast
	Slow
	Fan reversal—indicates when the fan is reversed
	Air intake heater is active
	Raise cutting units
	Lower cutting units
	Operator must sit in seat
	Parking Brake Indicator—indicates when the parking brake is On
H	Identifies the range as High
N	Neutral
L	Identifies the range as Low
	Coolant Temperature-indicates the engine coolant temperature in either °C or °F
	Temperature (hot)
	Denied or not allowed
	PTO is engaged
	Engine Start
STOP	Stop or shutdown

	Engine
	Key switch
	Indicates when the cutting units are being lowered
	Indicates when the cutting units are being raised
PIN	PIN passcode
	Hydraulic-fluid Temperature—indicates the hydraulic-fluid temperature
CAN	CAN bus
	InfoCenter
Bad	Bad or failed
	Bulb
OUT	Output of TEC controller or control wire in harness
HI	High: over allowed range
LO	Low: under allowed range
HI /LO	Out of range
	Switch
	Operator must release switch
	Operator should change to indicated state
Symbols are often combined to form sentences. Some examples are shown below.	
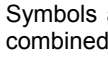	Operator should put machine in neutral
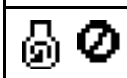	Engine start denied
	Engine shutdown
	Engine coolant too hot

InfoCenter Icon Description (cont'd.)

	Hydraulic oil too hot
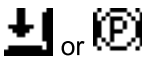 or	Sit down or set parking brake

🔒 Accessible only by entering PIN

Using the Menus

To access the InfoCenter menu system, press the menu access button while at the main screen. This will bring you to the main menu. Refer to the following tables for a synopsis of the options available from the menus:

Main Menu	
Menu Item	**Description**
Faults	The Faults menu contains a list of the recent machine faults. Refer to the *Service Manual* or your authorized Toro distributor for more information on the Faults menu and the information contained there.
Service	The Service menu contains information on the machine, such as hours of use counters and other similar numbers.
Diagnostics	The Diagnostics menu displays the state of each machine switch, sensor and control output. You can use this to troubleshoot certain issues as it tells you which machine controls are on or off.
Settings	The Settings menu allows you to customize and modify configuration variables on the InfoCenter display.
About	The About menu lists the model number, serial number, and software version of your machine.

Service	
Menu Item	**Description**
Hours	The hours menu lists the total number of hours that the machine, engine, and PTO have been on, as well as the number of hours the machine has been transported and when service is due.
Counts	The counts menu lists numerous counts the machine has experienced.

Diagnostics	
Menu Item	**Description**
Cutting Units	Indicates the inputs, qualifiers, and outputs for raising and lowering the cutting units
Hi/Low Range	Indicates the inputs, qualifiers, and outputs for driving in transport mode
PTO	Indicates the inputs, qualifiers, and outputs for enabling the PTO circuit
Engine Run	Indicates the inputs, qualifiers, and outputs for starting the engine
Backlap	Indicates the inputs, qualifiers, and outputs for operating the backlap function

Settings	
Menu Item	**Description**
Units	Controls the units used on the InfoCenter. The menu choices are English or Metric
Language	Controls the language used on the InfoCenter*
LCD Backlight	Controls the brightness of the LCD display
LCD Contrast	Controls the contrast of the LCD display
Front Backlap Reel Speed	Controls the speed of the front reels in backlap mode
Rear Backlap Reel Speed	Controls the speed of the rear reels in backlap mode
Protected Menus	Allows the superintendant/mechanic to access protected menus by inputting a passcode
Auto Idle 🔒	Controls the amount of time allowed before returning the engine to low idle when the machine is stationary
Blade Count 🔒	Controls the number of blades on the reel for reel speed
Mow Speed 🔒	Controls the ground speed for determining the reel speed
Height of cut (HOC) 🔒	Controls the height of cut (HOC) for determining the reel speed
F Reel RPM 🔒	Displays the calculated reel speed position for the front reels. The reels can also be manually adjusted
R Reel RPM 🔒	Displays the calculated reel speed position for the rear reels. The reels can also be manually adjusted

*Only operator-faced text is translated. Faults, Service, and Diagnostics screens are service-faced. Titles are in the selected language, but menu items are in English.

🔒 Protected under Protected Menus—accessible only by entering PIN

About	
Menu Item	**Description**
Model	Lists the model number of the machine
SN	Lists the serial number of the machine
Machine Controller Revision	Lists the software revision of the master controller
InfoCenter Revision	Lists the software revision of the InfoCenter
CAN Bus	Lists the machine communication bus status

Protected Menus

There are 5 operating configuration settings that are adjustable within the Settings Menu of the InfoCenter: Blade Count, Mow Speed, Height of Cut (HOC), F Reel RPM, and R Reel RPM. You can lock these settings by using the Protected Menu.

Note: At the time of delivery, the initial password code is programmed by your distributor.

Accessing the Protected Menu Settings

1. From the Main Menu, scroll down to the Settings Menu and press the right button.
2. In the Settings Menu, scroll down to the Protected Menu and press the right button.
3. To enter the passcode, use the center button to set the first digit then press the right button to move on to the next digit.
4. Use the center button to set the second digit then press the right button to move on to the next digit.
5. Use the center button to set the third digit then press the right button to move on to the next digit.
6. Use the center button to set the fourth digit then press the right button.
7. Press the middle button to enter the code.
8. If the code has been accepted and the protected menu has been “Unlocked”, “PIN” displays in the upper right corner of the display screen.

The ability to view and change the settings in the Protected Menu can be changed. Once the Protected Menu has been accessed, scroll down to Protect Settings. Using the right button, changing Protect Settings to Off will allow the ability to view and change the settings in the Protected Menu without entering the passcode. Changing Protect Settings to On will hide the protected options and will require entering a passcode to change the setting in the Protected Menu. After the pass code has been set, the key switch must be turned off and back on to enable and save this feature.

Note: If the passcode has been forgotten or misplaced, please contact your distributor for assistance.

Setting the Auto Idle

1. In the Settings Menu, scroll down to Auto Idle.
2. Press the right button to change the auto idle time between Off, 8S, 10S, 15S, 20S, and 30S.

Setting the Blade Count

1. In the Settings Menu, scroll down to Blade Count
2. Press the right button to change the Blade Count between 5, 8, or 11 blades.

Setting the Mow Speed

1. In the Settings Menu, scroll down to Mow Speed.
2. Press the right button to select mow speed.
3. Use the center and right button to select the appropriate mow speed set on the mechanical mow-speed limiter on the traction pedal.
4. Press the left button to exit mow speed and save the setting.

Setting the Height of Cut (HOC)

1. In the Settings Menu, scroll down to HOC.
2. Press the right button to select HOC.
3. Use the center and right button to select the appropriate HOC setting.

   Note: If the exact setting is not displayed, select the nearest HOC setting from the list displayed.
4. Press the left button to exit HOC and save the setting.

Setting the Front and Rear Reel Speeds

Although the front and rear reel speeds are calculated by inputting the number of blades, mow speed, and HOC into the InfoCenter, you can manually change the setting to accommodate different mowing conditions.

1. Scroll down to the F Reel RPM, R Reel RPM, or both.
2. Press the right button to change the reel speed value. As the speed setting changes, the display continues to show the calculated reel speed based on blade count, mow speed, and HOC that you previously entered, but the new value also appears.

Specifications

Note: Specifications and design are subject to change without notice.

Traction Unit Specifications

Width of cut, 27-inch cutting units	307 cm (121 inches)
Width of cut, 32-inch cutting units	320 cm (126 inches)
Overall width, 27-inch cutting units down	345 cm (136 inches)
Overall width, 32-inch cutting units down	358 cm (141 inches)
Overall width, cutting units up (transport)	239 cm (94 inches)
Overall length	370 cm (146 inches)
Height with ROPS	220 cm (87 inches)
Track width, front	229 cm (90 inches)
Track width, rear	141 cm (55.5 inches)
Wheelbase	171 cm (67.5 inches)
Net weight (with no cutting units and no fluids)	1574 kg (3,470 lb)

Attachments/Accessories

A selection of Toro approved attachments and accessories is available for use with the machine to enhance and expand its capabilities. Contact your Authorized Service Dealer or authorized Toro distributor or go to www.Toro.com for a list of all approved attachments and accessories.

To ensure optimum performance and continued safety certification of the machine, use only genuine Toro replacement parts and accessories. Replacement parts and accessories made by other manufacturers could be dangerous, and such use could void the product warranty.

Operation

Note: Determine the left and right sides of the machine from the normal operating position.

Before Operation

Before Operation Safety

General Safety

- Never allow children or untrained people to operate or service the machine. Local regulations may restrict the age of the operator. The owner is responsible for training all operators and mechanics.
- Become familiar with the safe operation of the equipment, operator controls, and safety signs.
- Shut off the engine, remove the key (if equipped), and wait for all movement to stop before you leave the operator's position. Allow the machine to cool before adjusting, servicing, cleaning, or storing it.
- Know how to stop the machine and shut off the engine quickly.
- Do not operate the machine without all guards and other safety protective devices in place and functioning properly on the machine.
- Before mowing, always inspect the machine to ensure that the cutting units are in good working condition.
- Inspect the area where you will use the machine and remove all objects that the machine could throw.

Fuel Safety

- Use extreme care in handling fuel. It is flammable and its vapors are explosive.
- Extinguish all cigarettes, cigars, pipes, and other sources of ignition.
- Use only an approved fuel container.
- Do not remove the fuel cap or fill the fuel tank while the engine is running or hot.
- Do not add or drain fuel in an enclosed space.
- Do not store the machine or fuel container where there is an open flame, spark, or pilot light, such as on a water heater or other appliance.
- If you spill fuel, do not attempt to start the engine; avoid creating any source of ignition until the fuel vapors have dissipated.

Performing Daily Maintenance

Service Interval: Before each use or daily

Before starting the machine each day, perform the Each Use/Daily procedures listed in Maintenance (page 36).

Filling the Fuel Tank

Fuel Tank Capacity

83 L (22 US gallons)

Fuel Specification

Failure to observe the following cautions may damage the engine.

- Never use kerosene or gasoline instead of diesel fuel.
- Never mix kerosene or used engine oil with the diesel fuel.
- Never keep fuel in containers with zinc plating on the inside.
- Do not use fuel additives.

Petroleum Diesel

Use only clean, fresh diesel fuel or biodiesel fuels with low (<500 ppm) or ultra-low (<15 ppm) sulfur content. The minimum cetane rating should be 40. Purchase fuel in quantities that can be used within 180 days to ensure fuel freshness.

Use summer-grade diesel fuel (Number 2-D) at temperatures above -7°C (20°F) and winter-grade diesel fuel (Number 1-D or Number 1-D/2-D blend) below -7°C (20°F). Using winter-grade fuel at lower temperatures provides a lower flash point and cold-flow characteristics, which will ease starting and reduce fuel-filter plugging.

Using summer-grade fuel above -7°C (20°F) will contribute toward longer fuel-pump life and increased power compared to winter-grade fuel.

Biodiesel

This machine can also use a biodiesel blended fuel of up to B20 (20% biodiesel, 80% petrodiesel). The petrodiesel portion should be low or ultra-low sulfur. Observe the following precautions:

Biodiesel fuel specification: ASTM D6751 or EN14214

Blended fuel specification: ASTM D975 or EN590

Observe the following precautions:

- Biodiesel blends may damage painted surfaces.
- Use B5 (biodiesel content of 5%) or lesser blends in cold weather.
- Monitor seals, hoses, and gaskets in contact with fuel as they may degrade over time.
- The fuel filter on your machine might become plugged for a time after converting to biodiesel blends.
- Contact your authorized Toro distributor for more information on biodiesel.

Adding Fuel

1. Park the machine on a level surface, lower the cutting units, shut off the engine, and remove the key.
2. Using a clean rag, clean the area around the fuel-tank cap.
3. Remove the cap from the fuel tank (Figure 33).

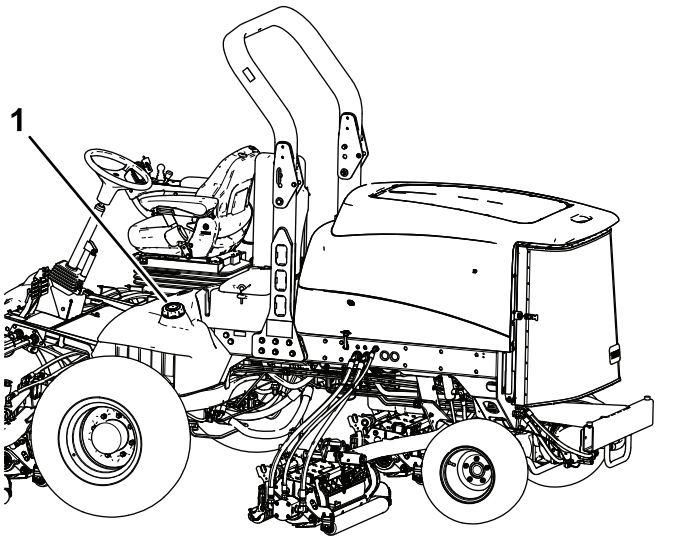

Figure 33

1. Fuel-tank cap

4. Fill the tank until the level is to the bottom of the filler neck with fuel.
5. Install the fuel-tank cap tightly after filling the tank.

   Note: If possible, fill the fuel tank after each use. This minimizes possible buildup of condensation inside the fuel tank.

During Operation

During Operation Safety

General Safety

- The owner/operator can prevent and is responsible for accidents that may cause personal injury or property damage.
- Wear appropriate clothing, including eye protection; long pants; substantial, slip-resistant footwear; and hearing protection. Tie back long hair and do not wear loose clothing or loose jewelry.
- Do not operate the machine while ill, tired, or under the influence of alcohol or drugs.
- Use your full attention while operating the machine. Do not engage in any activity that causes distractions; otherwise, injury or property damage may occur.
- Before you start the engine, ensure that all drives are in neutral, the parking brake is engaged, and you are in the operating position.
- Do not carry passengers on the machine and keep bystanders and children out of the operating area.
- Operate the machine only in good visibility to avoid holes or hidden hazards.
- Avoid mowing on wet grass. Reduced traction could cause the machine to slide.
- Keep your hands and feet away from the cutting units.
- Look behind and down before backing up to be sure of a clear path.
- Use care when approaching blind corners, shrubs, trees, or other objects that may obscure your vision.
- Stop the cutting units whenever you are not mowing.
- Slow down and use caution when making turns and crossing roads and sidewalks with the machine. Always yield the right-of-way.
- Operate the engine only in well-ventilated areas. Exhaust gases contain carbon monoxide, which is lethal if inhaled.
- Do not leave a running machine unattended.
- Before you leave the operator's position, do the following:
  - Park the machine on a level surface.
  - Disengage the cutting unit(s) and lower the attachments.
  - Engage the parking brake.
  - Shut off the engine and remove the key (if equipped).
  - Wait for all movement to stop.
- Operate the machine only in good visibility and appropriate weather conditions. Do not operate the machine when there is the risk of lightning.

Rollover Protection System (ROPS) Safety

- **Do not** remove the ROPS from the machine.
- Ensure that the seat belt is attached and that you can release it quickly in an emergency.
- Check carefully for overhead obstructions and do not contact them.
- Keep the ROPS in safe operating condition by thoroughly inspecting it periodically for damage and keeping all the mounting fasteners tight.
- Replace a damaged ROPS. Do not repair or alter it.

Machines with a Foldable Roll Bar

- Always use the seat belt with the roll bar in the raised position.
- The ROPS is an integral safety device. Keep a folding roll bar in the raised and locked position, and use the seat belt when operating the machine with the roll bar in the raised position.
- Lower a folding roll bar temporarily only when necessary. Do not wear the seat belt when the roll bar is folded down.
- Be aware that there is no rollover protection when a folded roll bar is in the down position.
- Check the area that you will be mowing and never fold down a folding roll bar in areas where there are slopes, drop-offs, or water.

Slope Safety

- Slopes are a major factor related to loss of control and rollover accidents, which can result in severe injury or death. The operator is responsible for safe slope operation. Operating the machine on any slope requires extra caution.
- Evaluate the site conditions to determine if the slope is safe for machine operation, including surveying the site. Always use common sense and good judgment when performing this survey.
- Review the slope instructions listed below for operating the machine on slopes and review the conditions in which you will operate the machine to determine whether you can operate it in the conditions on that day and at that site. Changes in the terrain can result in a change in slope operation for the machine.

- Avoid starting, stopping, or turning the machine on slopes. Avoid making sudden changes in speed or direction. Make turns slowly and gradually.
- Do not operate a machine under any conditions where traction, steering, or stability is in question.
- Remove or mark obstructions such as ditches, holes, ruts, bumps, rocks, or other hidden hazards. Tall grass can hide obstructions. Uneven terrain could overturn the machine.
- Be aware that operating the machine on wet grass, across slopes, or downhill may cause the machine to lose traction. Loss of traction to the drive wheels may result in sliding and a loss of braking and steering.
- Use extreme caution when operating the machine near drop offs, ditches, embankments, water hazards or other hazards. The machine could suddenly roll over if a wheel goes over the edge or the edge caves in. Establish a safety area between the machine and any hazard.
- Identify hazards at the base of the slope. If there are hazards, mow the slope with a pedestrian-controlled machine.
- If possible, keep the cutting unit(s) lowered to the ground while operating on slopes. Raising the cutting unit(s) while operating on slopes can cause the machine to become unstable.
- Use extreme caution with grass collection systems or other attachments. These can change the stability of the machine and cause a loss of control.

Starting the Engine

Important: **Bleed the fuel system if any of the following situations have occurred:**

- The engine has ceased running due to lack of fuel.
- Maintenance has been performed upon the fuel system components.

1. Remove your foot from the traction pedal and ensure that the pedal is in the NEUTRAL position.

   Note: Ensure that the parking brake is engaged.
2. Move the engine-speed switch to the LOW IDLE position.
3. Turn the key to the RUN position.

   Note: The glow indicator will light.
4. When the glow indicator dims, turn the key to the START position.
5. Release the key immediately when the engine starts and allow it to return to the RUN position.
6. Adjust the engine speed.

   Important: **Do not run the starter motor more than 15 seconds at a time or premature starter failure may result. If the engine fails to start after 15 seconds, turn the key to the OFF position, recheck the controls and procedures, wait 15 additional seconds, and repeat the starting procedure.**

   When the temperature is less than -7°C (20°F), the starter motor can be run for 30 seconds on then 60 seconds off for 2 attempts.

⚠ CAUTION

Contact with moving parts could result in injury.

Shut off the engine and wait for all moving parts to stop before checking for oil leaks, loose parts, and other malfunctions.

Shutting Off the Engine

Important: **Allow the engine to idle for 5 minutes before shutting it off after a full-load operation. This allows the turbocharger to cool down before shutting off the engine. Failure to do so may lead to turbocharger trouble.**

Note: Lower the cutting units to the ground whenever you park the machine. This relieves the hydraulic load from the system, prevents wear on system parts, and also prevents accidental lowering of the cutting units.

1. Return the engine speed to low idle.
2. Move the PTO switch to the OFF position.
3. Engage the parking brake.
4. Rotate the key to OFF.
5. Remove the key from the switch to prevent accidental starting.

Adjusting the Lift-Arm Counterbalance

You can adjust the counterbalance on the rear cutting-unit lift arms to compensate for different turf conditions and to maintain a uniform height of cut in rough conditions or in areas of thatch buildup.

You can adjust each counterbalance spring to 1 of 4 settings. Each increment increases or decreases the counterbalance on the cutting unit by 2.3 kg (5 lb). You can position the springs on the back side of the first spring actuator to remove all counterbalance (fourth position).

1. Park the machine on a level surface, lower the cutting units, engage the parking brake, shut off the engine, and remove the key.

2. Insert a tube or similar object onto the long spring end to relieve the spring tension during the adjustment (Figure 34).

⚠ CAUTION

The springs are under tension and could cause personal injury.

Use caution when adjusting the springs.

3. While relieving the spring tension, remove the bolt and locknut securing the spring actuator to the bracket (Figure 34).

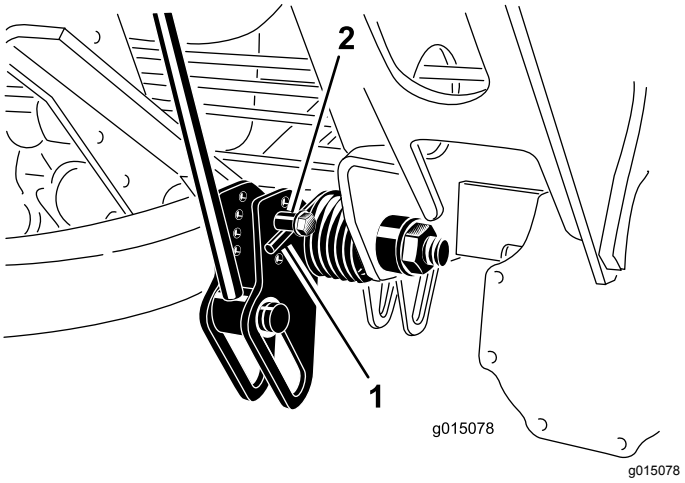

Figure 34

1. Spring
2. Spring actuator

4. Move the spring actuator to the desired hole location and secure it with the locknut.
5. Repeat the procedure on the remaining spring.

Adjusting the Lift-Arm Turnaround Position

1. Park the machine on a level surface, lower the cutting units, engage the parking brake, shut off the engine, and remove the key.
2. The lift-arm switch is located behind the front right lift arm (Figure 35).

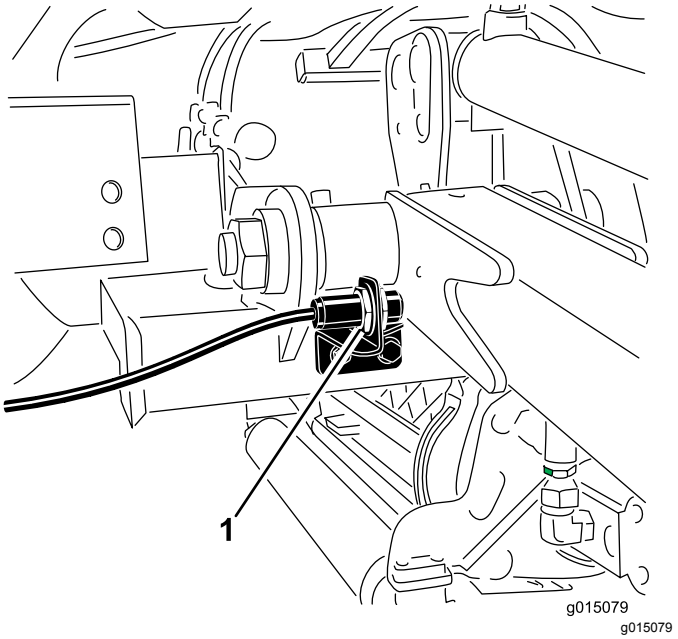

Figure 35

1. Switch

3. Loosen the switch mounting screws (Figure 35) and move the switch up to increase the lift-arm turnaround height or move the switch down to decrease the lift-arm turnaround height.
4. Tighten the mounting screws.

Folding the Roll Bar

You can fold the roll bar down to allow access into areas of restricted height.

⚠ WARNING

The machine does not have a rollover protection system (ROPS) when the roll bar is folded down and should not be considered a ROPS.

Do not wear a seatbelt when the roll bar is lowered.

1. Park the machine on a level surface, lower the cutting units, engage the parking brake, shut off the engine, and remove the key.
2. Support the weight of the upper frame of the roll bar while removing the snap pins and clevis pins from the pivot brackets (Figure 36).

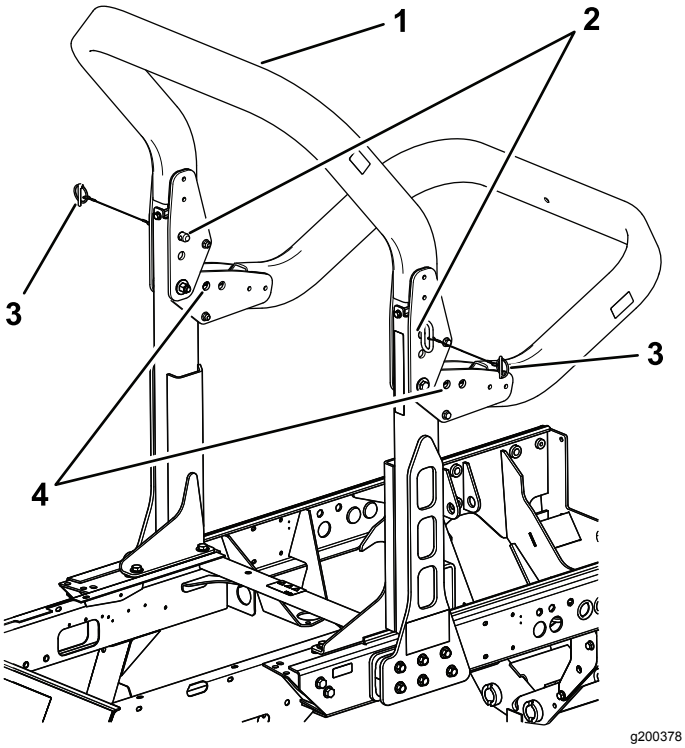

Figure 36

1. Upper frame
2. Clevis pins
3. Snap pins
4. Lower holes

3. Carefully lower the frame downward until it rests on the stops.
4. Insert the clevis pins in the lower holes and secure them with the snap pins to support the upper frame in its lowered position.
5. To raise the frame, follow these instructions in reverse order.

⚠ WARNING

The ROPS protection system may not be effective if the ROPS retaining bolt assemblies are loose, which may cause serious injury or even death in the event of a rollover.

When in the raised position, both retaining bolt assemblies must be installed and fully tightened to ensure full ROPS protection.

⚠ WARNING

When lowering and raising the roll bar, fingers may get pinched between the machine and the roll bar.

Use caution when lowering and raising the roll bar to prevent entrapment of fingers between the fixed part and the pivot part of the structure.

- Keep all nuts, bolts, and screws correctly torqued ensure that the equipment is in safe working condition.
- Replace worn or damaged parts for safety.
- Ensure that the seat belt and mountings are in safe working order.
- Wear the seat belt when the roll bar is raised and no seat belt when the roll bar is lowered.

Important: **The roll bar is an integral safety device. Keep the roll bar in the raised position when operating the mower. Lower the roll bar temporarily only when absolutely necessary.**

Checking the Interlock Switches

Service Interval: Before each use or daily

⚠ CAUTION

If safety interlock switches are disconnected or damaged the machine could operate unexpectedly causing personal injury.

- **Do not tamper with the interlock switches.**
- **Check the operation of the interlock switches daily and replace any damaged switches before operating the machine.**

The machine has interlock switches in the electrical system. These switches are designed to shut off the engine when you rise from the seat while pressing the traction pedal. However, you may rise from the seat while the engine is running and the traction pedal is in neutral. Although the engine continues to run if you disengage the PTO switch and release the traction pedal, shut off the engine before rising from the seat.

To check the operation of the interlock switches, do the following steps:

1. Drive the machine slowly to a large, relatively open area.
2. Lower the cutting units, shut off the engine, and engage the parking brake.
3. Sit on the seat and press the traction pedal.
4. Try to start the engine.

   Note: The engine should not crank. If the engine cranks, there is a malfunction in the interlock system; correct it before operating the machine.
5. Sit on the seat and start the engine.
6. Rise from the seat and move the PTO switch to the On position.

Note: The PTO should not engage. If the PTO engages, there is a malfunction in the interlock system; correct it before operating the machine.

7. Sit on the seat, engage the parking brake, and start the engine.
8. Move the traction pedal out of the NEUTRAL position.

   Note: The engine should shut off. If the engine does not shut off, there is a malfunction in the interlock system; correct it before operating the machine.

Operating Tips

Becoming Familiar with the Machine

Before mowing grass, practice operating the machine in an open area. Start and shut off the engine. Operate in forward and reverse. Lower and raise the cutting units and engage and disengage the reels. When you feel familiar with the machine, practice operating up and down slopes at different speeds.

Understanding the Warning System

If a warning light comes on during operation, stop the machine immediately and correct the problem before continuing operation. Serious damage could occur if you operate the machine with a malfunction.

Mowing Grass

Start the engine and move the engine speed switch to the FAST position. Move the mow speed limiter to the MOW position. Move the PTO switch to the ON position and use the lift switch to control the cutting units (the front cutting units are timed to lower before the rear cutting units). To move forward and cut grass, press the traction pedal forward.

Driving the Machine in Transport Mode

Move the PTO switch to the OFF position and raise the cutting units to the transport position. Move the mow speed limiter to the transport position. Be careful when driving between objects so that you do not accidentally damage the machine or cutting units. Use extra care when operating the machine on slopes. Drive slowly and avoid sharp turns on slopes to prevent rollovers.

After Operation

After Operation Safety

General Safety

- Shut off the engine, remove the key (if equipped), and wait for all movement to stop before you leave the operator's position. Allow the machine to cool before adjusting, servicing, cleaning, or storing it.
- Clean grass and debris from the cutting units, drives, mufflers, cooling screens, and engine compartment to help prevent fires. Clean up oil or fuel spills.
- Shut off the fuel while storing or transporting the machine.
- Disengage the drive to the attachment whenever you are transporting or not using the machine.
- Maintain and clean the seat belt(s) as necessary.
- Do not store the machine or fuel container where there is an open flame, spark, or pilot light, such as on a water heater or on other appliances.

Hauling the Machine

- Use full-width ramps for loading the machine onto a trailer or truck.
- Tie the machine down securely.

Identifying the Tie-Down Points

The tie-down points are in the following locations:

- On each side of the frame under the front steps
- The rear bumper

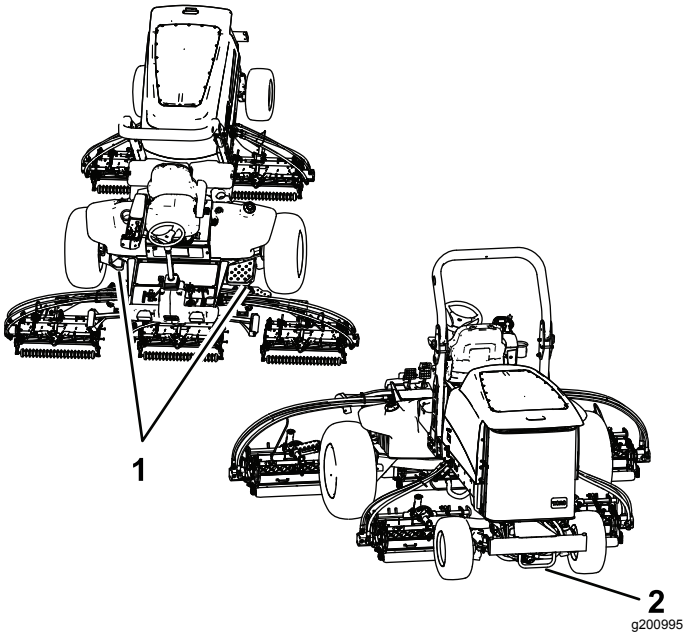

Figure 37

1. Front tie-down points
2. Rear tie-down point

Locating the Jacking Points

Note: Support the machine with jack stands whenever you work under the machine.

The jacking points are in the following locations:

- On the front of the machine on the frame on the inside of each drive tire
- On the rear of the machine at the center of the axle

Pushing or Towing the Machine

In an emergency, you can move the machine by actuating the bypass valve in the variable displacement hydraulic pump and installing a hydraulic hose to bypass the check valve, and then pushing or towing the machine.

Important: **Do not push or tow the machine faster than 3 to 4.8 km/h (2 to 3 mph) or for more than 0.4 km (1/4 mile), because internal transmission damage may occur. The bypass valve must be open whenever you push or tow the machine. Additionally, you need to install a hydraulic hose to bypass the check valve whenever you push or tow the machine in reverse.**

If you need to push or tow your machine, you will likely need to move it both forward and in reverse. To ensure that the drive system does not become damaged from pushing or towing, it is best to prepare the machine for both forward and reverse pushing or towing.

Preparing the Machine for Pushing or Towing in Reverse

Important: **If you need to push or tow the machine in reverse, you must first bypass the check valve in the 4-wheel-drive manifold.**

The following Toro parts are needed to bypass the check valve:

- Toro Part No. 59-7410, diagnostic fitting
- Toro Part No. 354-79, diagnostic-fitting cap
- Toro Part No. 95-8843, hydraulic hose
- Toro Part No. 95-0985, coupler fitting (2)
- Toro Part No. 340-77, hydraulic fitting (2)

1. Install a diagnostic fitting in the unmarked port located between ports M8 and P2 on the rear traction manifold (Figure 38).

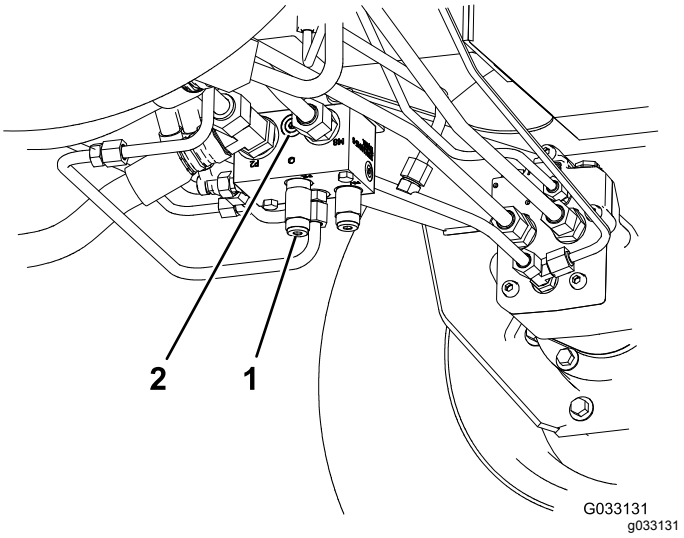

Figure 38

1. Rear traction manifold (behind front left wheel)
2. Unmarked port

2. Connect a hydraulic hose between the diagnostic fitting installed in the rear traction manifold and the reverse traction pressure test port (Figure 39).

   Note: Use the hydraulic fittings and coupler fittings as needed to install the hose.

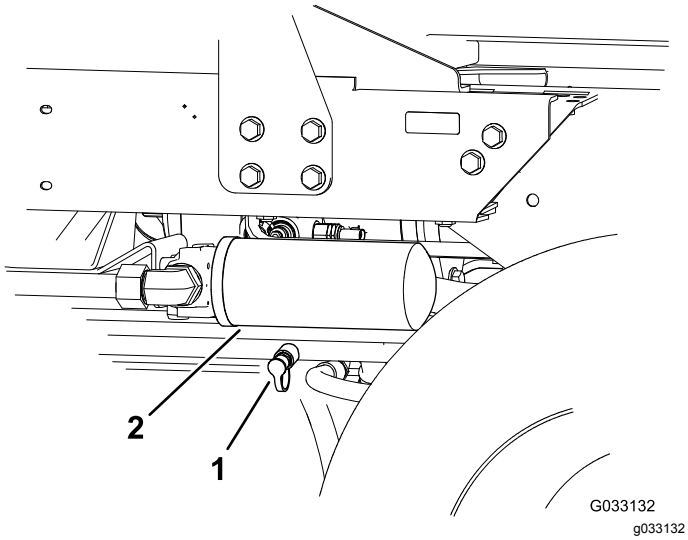

Figure 39

1. Reverse traction pressure test port
2. Hydraulic fluid return filter

3. Rotate the bypass valve 90° (1/4 turn) in either direction to open it and allow fluid to bypass internally (Figure 40).

   Note: Because the fluid bypasses the transmission, you can move the machine slowly without damaging the transmission.

   Note the position of the valve when opening and closing it.

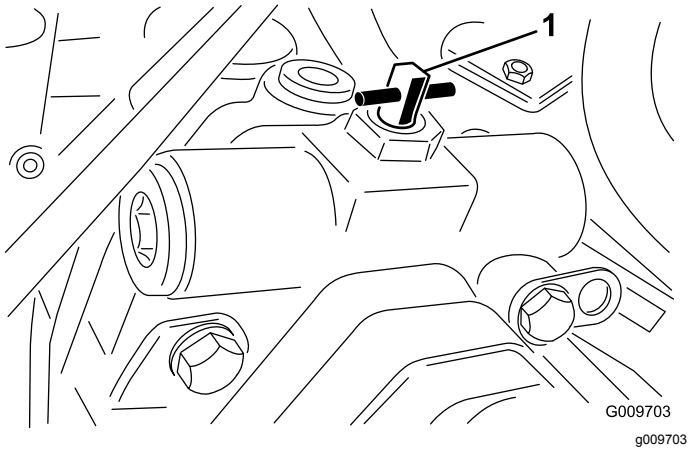

Figure 40

1. Bypass valve

4. When you are finished pushing or towing the machine, remove the hydraulic hose that you installed.
5. Install the existing cap onto the reverse traction pressure test port.
6. Install the diagnostic-fitting cap onto the fitting that you installed on the manifold.
7. Rotate the bypass valve 90° (1/4 turn) back before starting the engine.

   Note: Do not exceed 7 to 11 N·m (5 to 8 ft-lb) torque to close the valve.

Pushing or Towing the Machine Forward Only

If you need to push or tow the machine forward only, you can just rotate the bypass valve.

Important: **If you need to push or tow the machine in reverse, refer to Preparing the Machine for Pushing or Towing in Reverse (page 34).**

1. Open the hood and remove the center shroud.
2. Rotate the bypass valve 90° (1/4 turn) in either direction to open it and allow fluid to bypass internally (Figure 40).

   Note: Because the fluid bypasses the transmission, you can move the machine forward slowly without damaging the transmission.

   Note the position of the valve when opening and closing it.
3. Rotate the bypass valve 90° (1/4 turn) back before starting the engine.

   Note: Do not exceed 7 to 11 N·m (5 to 8 ft-lb) torque to close the valve.

Maintenance

Note: Determine the left and right sides of the machine from the normal operating position.

Maintenance Safety

- Before you leave the operator's position, do the following:
  - Park the machine on a level surface.
  - Disengage the cutting unit(s) and lower the attachments.
  - Engage the parking brake.
  - Shut off the engine and remove the key (if equipped).
  - Wait for all movement to stop.
- Allow machine components to cool before performing maintenance.
- If possible, do not perform maintenance while the engine is running. Keep away from moving parts.
- Support the machine with jack stands whenever you work under the machine.
- Carefully release pressure from components with stored energy.
- Keep all parts of the machine in good working condition and all hardware tightened.
- Replace all worn or damaged decals.
- To ensure safe, optimal performance of the machine, use only genuine Toro replacement parts. Replacement parts made by other manufacturers could be dangerous, and such use could void the product warranty.

Recommended Maintenance Schedule(s)

Maintenance Service Interval	Maintenance Procedure
After the first 8 hours	• Torque the wheel nuts.
After the first 200 hours	• Change the front planetary-gear oil. • Change the oil in the rear axle.
Before each use or daily	• Inspect the seat belt(s) for wear, cuts, and other damage. Replace the seat belt(s) if any component does not operate properly. • Check the interlock switches. • Check the level of the engine oil. • Drain water or other contaminants from the water separator. • Check the tire pressure. • Visually inspect the rear axle for leaks. • Visually inspect the gear box in the rear axle for leaks. • Check the cooling system. • Remove debris from the engine area, oil cooler, and radiator. • Check the hydraulic lines and hoses. • Check the level of the hydraulic fluid.
Every 50 hours	• Grease the bearings and bushings. • Check the battery condition.
Every 100 hours	• Check the condition and tension of the alternator belt.
Every 200 hours	• Torque the wheel nuts.
Every 250 hours	• Change the engine oil and filter.

Maintenance Service Interval	Maintenance Procedure
Every 400 hours	• Service the air cleaner. Service the air cleaner earlier if the service indicator shows red. Service it more frequently in extremely dirty or dusty conditions. • Check the fuel lines and connections for deterioration, damage, or loose connections. • Replace the fuel filter canister. • Check for end-play in the planetary drives. • Check the planetary-gear-drive oil level (check if you notice external leakage). • Check the oil level of the rear axle. (Also check the oil level before you start the engine for the first time.) • Check the lubricant in the gear box of the rear axle. (Also check the lubricant before you first start the engine.)
Every 800 hours	• Drain and clean the fuel tank. • Change the front planetary-gear oil or yearly, whichever comes first. • Change the oil in the rear axle. • Check the rear-wheel toe-in. • If you are not using the recommended hydraulic fluid or have ever filled the reservoir with an alternative fluid, change the hydraulic fluid. • If you are not using the recommended hydraulic fluid or have ever filled the reservoir with an alternative fluid, replace the hydraulic filters.
Every 1,000 hours	• If you are using the recommended hydraulic fluid, replace the hydraulic filters.
Every 2,000 hours	• If you are using the recommended hydraulic fluid, change the hydraulic fluid.
Before storage	• Drain and clean the fuel tank. • Check the tire pressure. • Check all fasteners. • Grease or oil all grease fittings and pivot points. • Paint chipped surfaces.

Daily Maintenance Checklist

Duplicate this page for routine use.

Maintenance Check Item	For the week of:						
	Mon.	Tues.	Wed.	Thurs.	Fri.	Sat.	Sun.
Check the safety interlock operation.							
Check the brake operation.							
Check the levels of the engine oil and fuel.							
Check the cooling-system fluid level.							
Drain the water/fuel separator.							
Check the air-filter service indicator.							
Check the radiator, oil cooler, and screen for debris.							
Check for unusual engine noises.[1]							
Check for unusual operating noises.							
Check the fluid level of the hydraulic system.							
Check the hydraulic hoses for damage.							
Check for fluid leaks.							
Check the tire pressure.							
Check the instrument operation.							
Check the reel-to-bedknife adjustment.							
Check the height-of-cut adjustment.							
Lubricate all grease fittings.[2]							
Touch-up damaged paint.							

Maintenance Check Item	For the week of:						
	Mon.	Tues.	Wed.	Thurs.	Fri.	Sat.	Sun.
Wash the machine.							

1. Check the glow plug and injector nozzles if the engine starts hard, produces excess smoke, or runs rough.
2. Immediately after every washing, regardless of the interval listed

Notation for Areas of Concern

Inspection performed by:		
Item	**Date**	**Information**
1		
2		
3		
4		
5		
6		
7		
8		

Important: **Refer to your engine owner's manual and cutting unit *Operator's Manual* for additional maintenance procedures.**

Note: Download a free copy of the electrical or hydraulic schematic by visiting www.Toro.com and searching for your machine from the Manuals link on the home page.

Lubrication

Greasing the Bearings and Bushings

Service Interval: Every 50 hours

The machine has grease fittings that must be lubricated regularly with No. 2 lithium grease. If you operate the machine under normal conditions, lubricate all bearings and bushings after every 50 hours of operation or immediately after every washing.

The grease fitting locations and quantities are as follows:

- Brake shaft pivot bearings (5) (Figure 41)

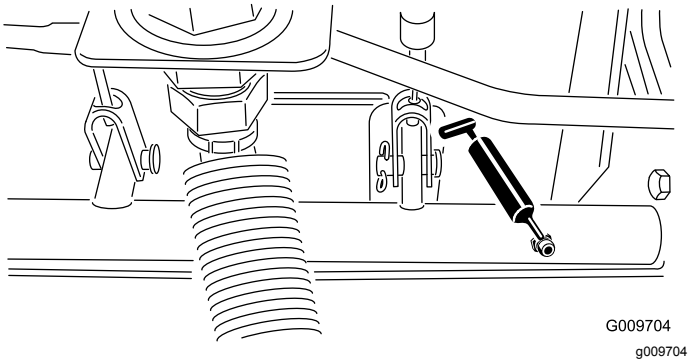

Figure 41

- Rear axle pivot bushings (2) (Figure 42)

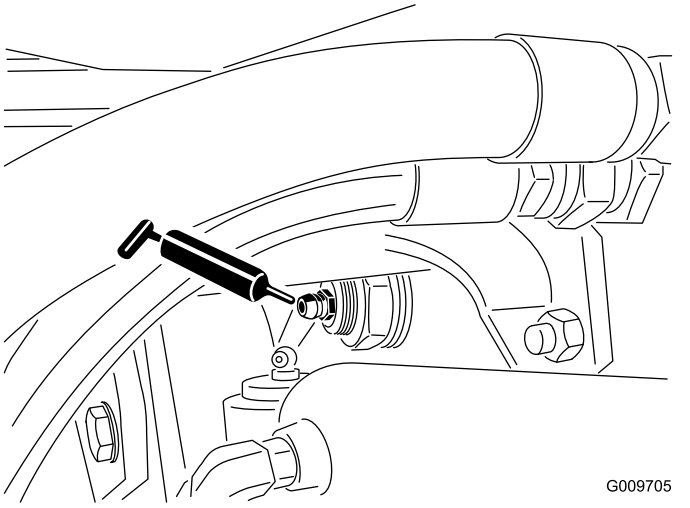

Figure 42

- Steering cylinder ball joints (2) (Figure 43)

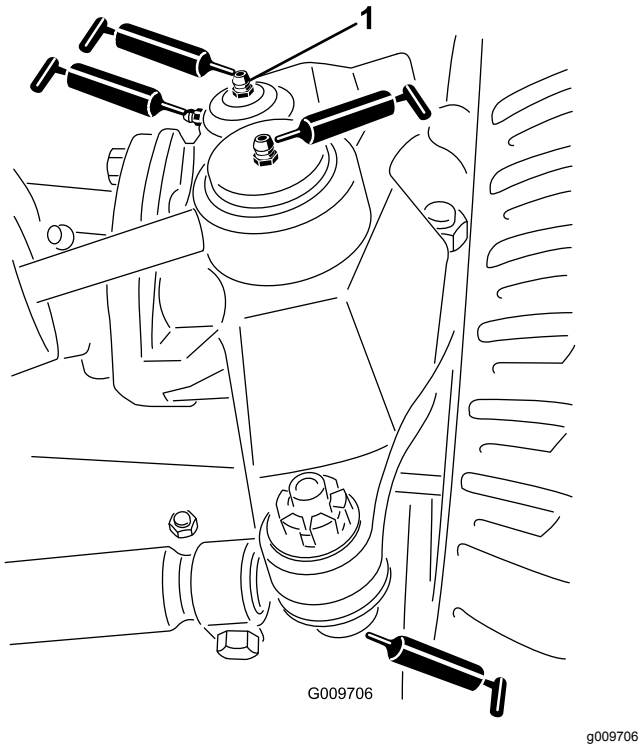

Figure 43

1. Top fitting on king pin

- Tie rod ball joints (2) (Figure 43)
- King pin bushings (2) (Figure 43). **The top fitting on the king pin should only be lubricated annually (2 pumps).**
- Lift arm bushings (1 per cutting unit) (Figure 44)

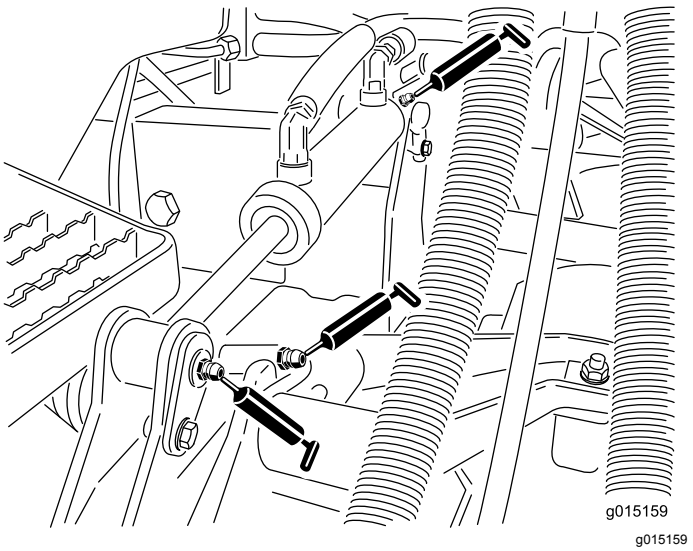

Figure 44

- Lift cylinder bushings (2 per cutting unit) (Figure 44)
- Lift arm pivot bushings (1 per cutting unit) (Figure 45)

- Cutting unit carrier frame (2 per cutting unit) (Figure 45)
- Cutting unit lift arm pivot (1 per cutting unit) (Figure 45)

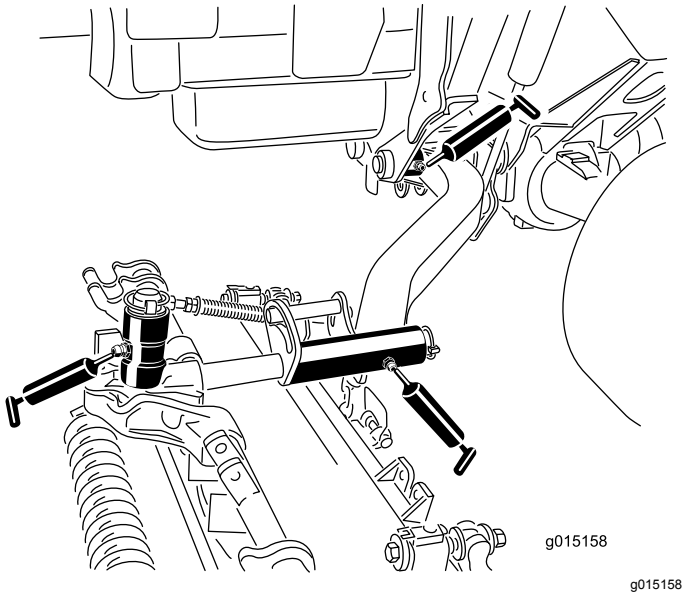

Figure 45

Engine Maintenance

Engine Safety

- Shut off the engine before checking the oil or adding oil to the crankcase.
- Do not change the governor speed or overspeed the engine.

Servicing the Air Cleaner

Service Interval: Every 400 hours—Service the air cleaner. Service the air cleaner earlier if the service indicator shows red. Service it more frequently in extremely dirty or dusty conditions.

Check the air-cleaner body for damage which could cause an air leak. Replace it if it is damaged. Check the whole intake system for leaks, damage, or loose hose clamps.

Service the air-cleaner filter only when the service indicator (Figure 46) requires it. Changing the air filter before it is necessary only increases the chance of dirt entering the engine when the filter is removed.

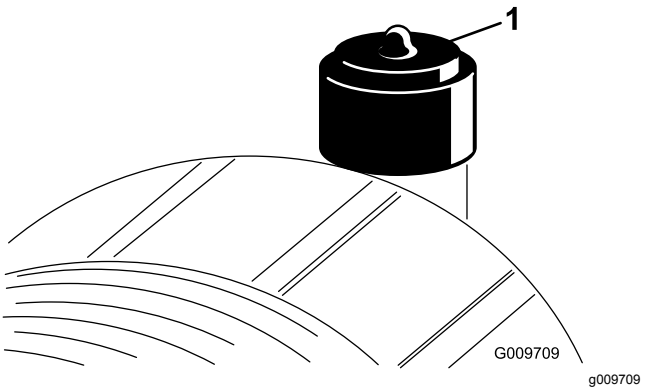

Figure 46

1. Service indicator

Important: **Be sure that the cover is seated correctly and seals with the air-cleaner body.**

1. Park the machine on a level surface, lower the cutting units, engage the parking brake, shut off the engine, and remove the key.
2. Pull the latch outward and rotate the air-cleaner cover counterclockwise (Figure 47).

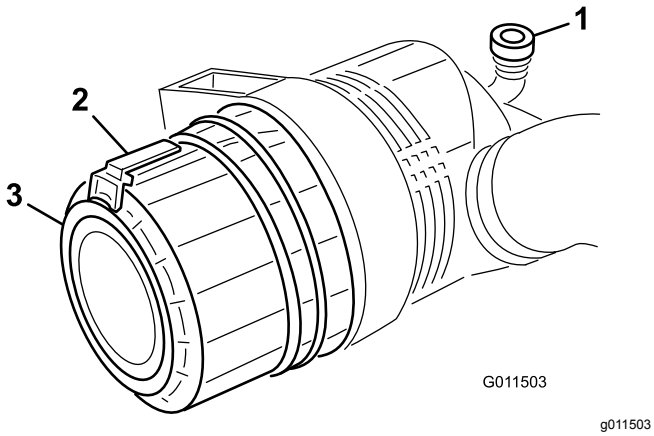

Figure 47

1. Service indicator
2. Latch
3. Cover

3. Remove the cover from the air-cleaner body.
4. Before removing the filter, use low-pressure air—275 kPa (40 psi), clean and dry—to help remove large accumulations of debris packed between outside of primary filter and the canister. **Avoid using high-pressure air, which could force dirt through the filter into the intake tract.**

   This cleaning process prevents debris from migrating into the intake when the primary filter is removed.
5. Remove and replace the primary filter (Figure 48).

   Cleaning of the used element is not recommended due to the possibility of damage to the filter media. Inspect the new filter for shipping damage, checking the sealing end of the filter and the body. **Do not use a damaged element.**

   Insert the new filter by applying pressure to the outer rim of the element to seat it in the canister. **Do not apply pressure to the flexible center of the filter.**

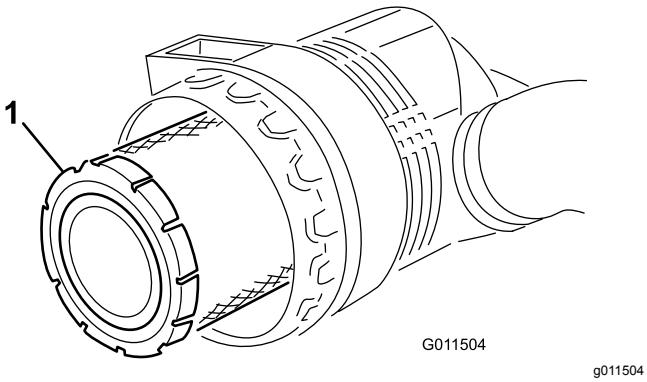

Figure 48

1. Primary filter

Important: **Never attempt to clean the safety filter (Figure 49). Replace the safety filter with a new one after every 3 primary filter services.**

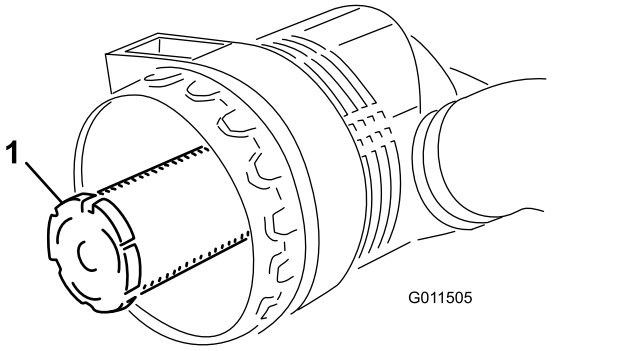

Figure 49

1. Safety filter

6. Clean the dirt-ejection port located in the removable cover.
7. Remove the rubber outlet valve from the cover, clean the cavity, and install the outlet valve.
8. Install the cover, orienting the rubber outlet valve in a downward position—between approximately 5 o'clock to 7 o'clock when viewed from the end.
9. Reset the indicator (Figure 46) if it shows red.

Checking the Level of the Engine Oil

Service Interval: Before each use or daily

The engine is shipped with oil in the crankcase; however, the oil level must be checked before and after the engine is first started.

The crankcase capacity is approximately 9.5 L (10 US qt) with the filter.

Use high-quality engine oil that meets the following specifications:

- API Classification Level Required: CH-4, CI-4, or higher.
- Preferred oil: SAE 15W-40: above -18°C (0°F)
- Alternate oil: SAE 10W-30 or 5W-30 (all temperatures)

Note: Toro Premium Engine oil is available from your distributor in either 15W-40 or 10W-30 viscosity.

Note: The best time to check the engine oil is when the engine is cool before it has been started for the day. If it has already been run, allow the oil to drain back down to the sump for at least 10 minutes before checking. If the oil level is at or

below the Add mark on the dipstick, add oil to bring the oil level to the Full mark. **Do not overfill the engine.** If the oil level is between the Full and Add marks, no oil addition is required.

1. Park the machine on a level surface, lower the cutting units, engage the parking brake, shut off the engine, and remove the key.
2. Unlock the hood latches and open the hood (Figure 50).

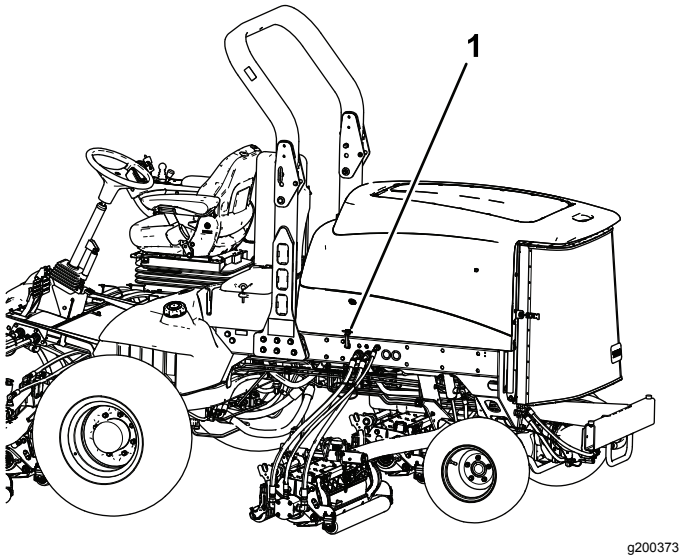

Figure 50

1. Hood latch

3. Remove the dipstick, wipe it clean, install the dipstick into the tube, and pull it out again.

   The oil level should be in the safe range (Figure 51).

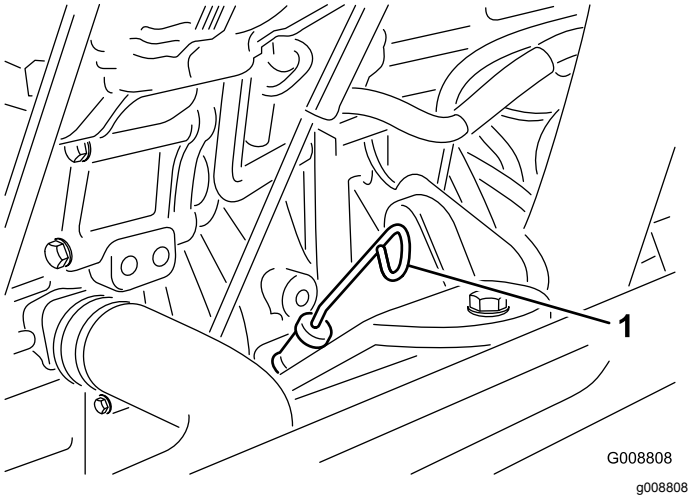

Figure 51

1. Dipstick

4. If the oil is below the safe range, remove the fill cap (Figure 52) and add oil until the level reaches the Full mark.

Important: **Do not overfill the engine.**

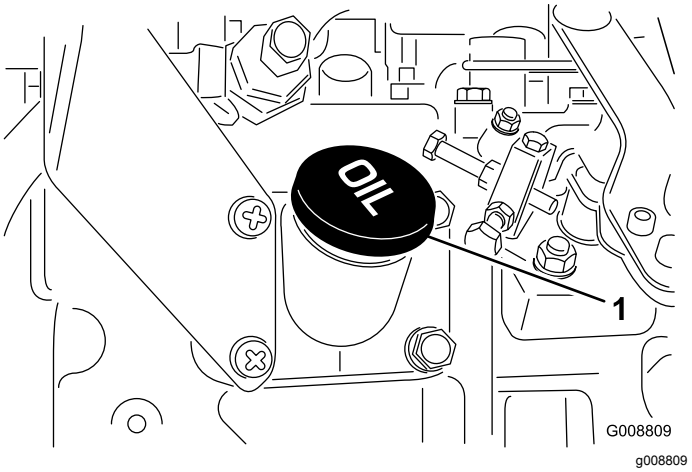

Figure 52

1. Oil-fill cap

Note: When using different oil, drain all old oil from the crankcase before adding new oil.

5. Install the oil fill cap and dipstick.
6. Close the hood and secure it with the latches.

Servicing the Engine Oil and Filter

Service Interval: Every 250 hours

1. Park the machine on a level surface, lower the cutting units, engage the parking brake, shut off the engine, and remove the key.
2. Remove the drain plug (Figure 53) and let the oil flow into a drain pan.

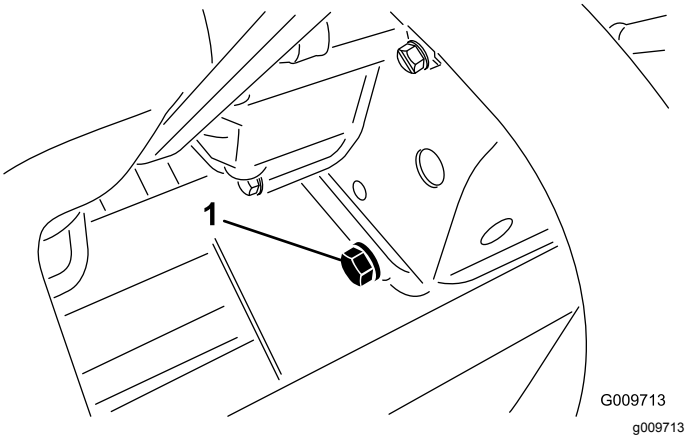

Figure 53

1. Drain plug

3. Install the drain plug when the oil stops.
4. Remove the oil filter (Figure 54).

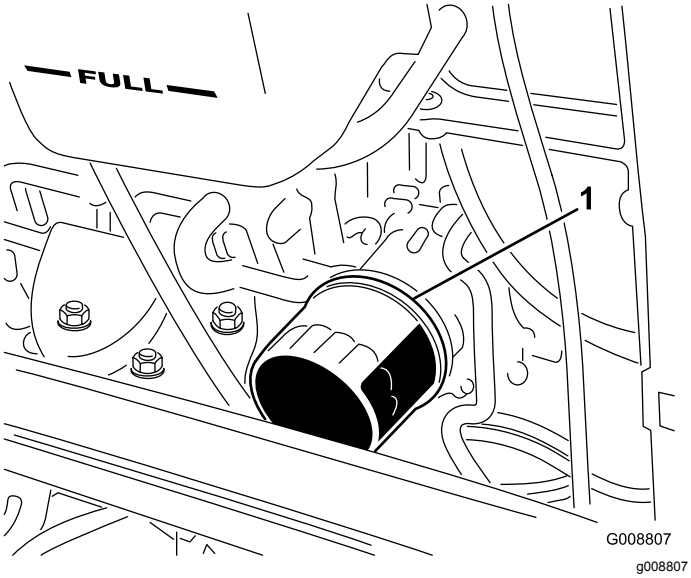

Figure 54

1. Oil filter

5. Apply a light coat of clean oil to the new filter seal before installing it.

   Note: Do not overtighten the filter.

6. Add oil to the crankcase; refer to Checking the Level of the Engine Oil (page 42).

Adjusting the Throttle

Adjust the throttle cable (Figure 55) so that the governor lever on the engine contacts the high speed set bolt at the same point that the throttle cable contacts the end of the slot in the control arm.

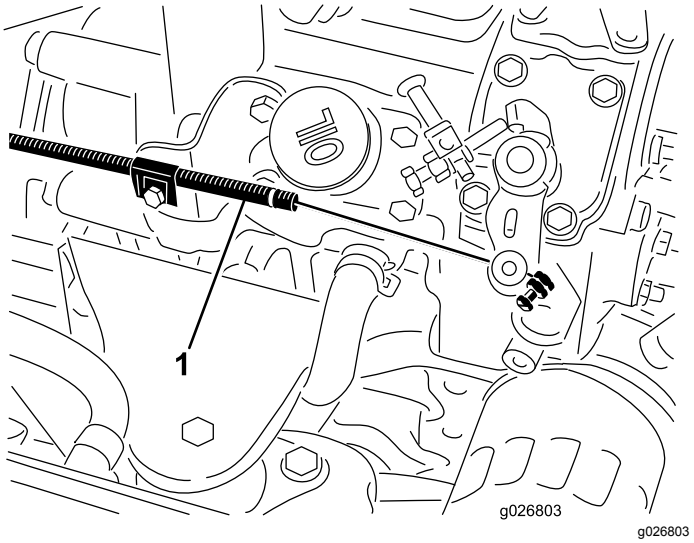

Figure 55

1. Throttle cable

Fuel System Maintenance

⚠ DANGER

Under certain conditions, fuel and fuel vapors are highly flammable and explosive. A fire or explosion from fuel can burn you and others and can cause property damage.

- **Fill the fuel tank outdoors, in an open area, when the engine is off and is cold. Wipe up any fuel that spills.**
- **Do not fill the fuel tank completely full. Add fuel to the fuel tank until the level is 25 mm (1 inch) below the top of the tank, not the filler neck. This empty space in the tank allows the fuel to expand.**
- **Never smoke when handling fuel, and stay away from an open flame or where fuel fumes may be ignited by a spark.**
- **Store fuel in a clean, safety-approved container and keep the cap in place.**

Draining the Fuel Tank

Service Interval: Every 800 hours

Before storage

Park the machine on a level surface, lower the cutting units, engage the parking brake, shut off the engine, and remove the key.

Drain and clean the fuel tank if the fuel system becomes contaminated or if the machine is to be stored for an extended period. Use clean fuel to flush out the tank.

Checking the Fuel Lines and Connections

Service Interval: Every 400 hours/Yearly (whichever comes first)

Park the machine on a level surface, lower the cutting units, engage the parking brake, shut off the engine, and remove the key.

Inspect the fuel lines for deterioration, damage, or loose connections.

Servicing the Water Separator

Service Interval: Before each use or daily—Drain water or other contaminants from the water separator.

Every 400 hours—Replace the fuel filter canister.

1. Park the machine on a level surface, lower the cutting units, engage the parking brake, shut off the engine, and remove the key.
2. Place a clean container under the fuel filter.
3. Loosen the drain plug on the bottom of the filter canister.

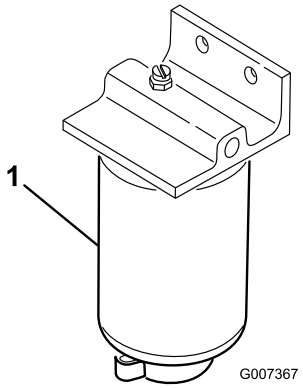

g007367

Figure 56

1. Filter canister

4. Clean the area where the filter canister mounts.
5. Remove the filter canister and clean the mounting surface.
6. Lubricate the gasket on the filter canister with clean oil.
7. Install the filter canister by hand until the gasket contacts mounting surface, then rotate it an additional 1/2 turn.
8. Tighten the drain plug on the bottom of the filter canister.

Cleaning the Fuel-Intake Screen

Park the machine on a level surface, lower the cutting units, engage the parking brake, shut off the engine, and remove the key.

The fuel-intake tube, located inside the fuel tank, is equipped with a screen to help prevent debris from entering the fuel system. Remove the fuel-intake tube and clean the screen as required.

Electrical System Maintenance

Electrical System Safety

- Disconnect the battery before repairing the machine. Disconnect the negative terminal first and the positive last. Connect the positive terminal first and the negative last.
- Charge the battery in an open, well-ventilated area, away from sparks and flames. Unplug the charger before connecting or disconnecting the battery. Wear protective clothing and use insulated tools.

Charging and Connecting the Battery

1. Park the machine on a level surface, lower the cutting units, engage the parking brake, shut off the engine, and remove the key.
2. Unlatch and raise the operator's console panel (Figure 57).

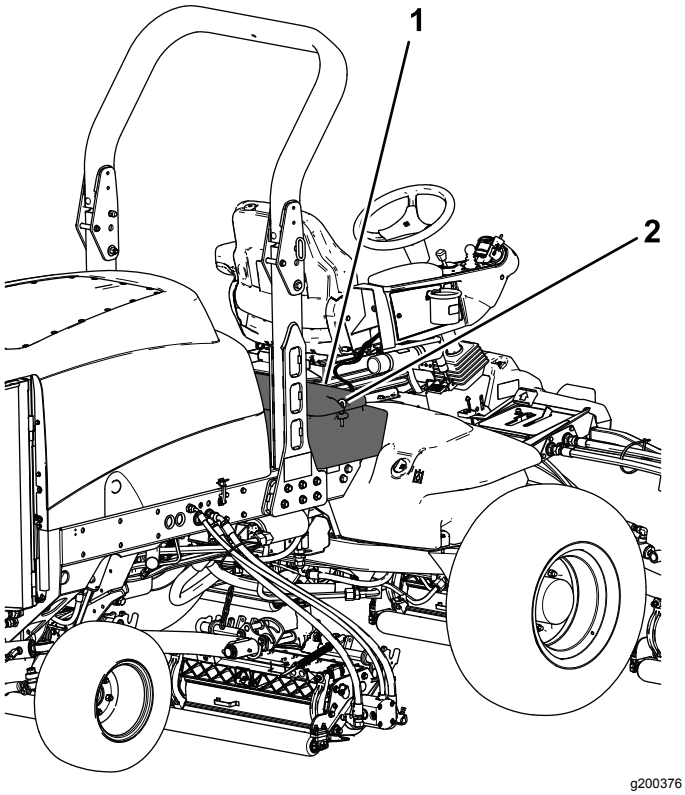

Figure 57

1. Operator's console panel 2. Latch

⚠ DANGER

Battery electrolyte contains sulfuric acid, which is fatal if consumed and causes severe burns.

- **Do not drink electrolyte and avoid contact with skin, eyes, or clothing. Wear safety glasses to shield your eyes and rubber gloves to protect your hands.**
- **Fill the battery where clean water is always available for flushing the skin.**

3. Connect a 3 to 4 A battery charger to the battery posts.
4. Charge the battery at a rate of 3 to 4 A for 4 to 8 hours.
5. When the battery is charged, disconnect the charger from the electrical outlet and battery posts.
6. Install the positive cable (red) to the positive (+) terminal and the negative cable (black) to the negative (-) terminal of the battery (Figure 58).

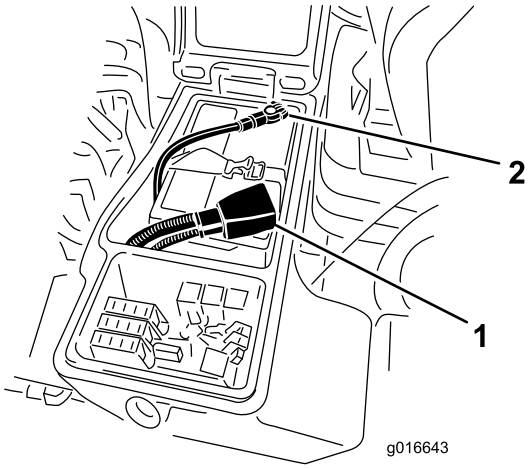

g016643

Figure 58

1. Positive battery cable 2. Negative battery cable

7. Secure the cables to the posts with cap screws and nuts.

   Make sure that the positive (+) terminal is all of the way onto the post and the cable is positioned snug to the battery. The cable must not contact the battery cover.
8. Slide the rubber boot over the positive terminal to prevent a possible short from occurring.
9. Coat both battery connections with Grafo 112X (skin-over) grease, Toro Part No. 505-47, petroleum jelly, or light grease to prevent corrosion.
10. Slide the rubber boot over the positive terminal.

11. Close the console panel and secure the latch.

Servicing the Battery

Service Interval: Every 50 hours

Important: **Before welding on the machine, disconnect the negative cable from the battery to prevent damage to the electrical system.**

Note: Check the battery condition weekly or after every 50 hours of operation. Keep the terminals and the entire battery case clean because a dirty battery will discharge slowly.

Clean the battery as follows:

1. Park the machine on a level surface, lower the cutting units, engage the parking brake, shut off the engine, and remove the key.
2. Remove the battery from the machine.
3. Wash the entire case with a solution of baking soda and water.
4. Rinse the case with clean water.
5. Coat the battery posts and cable connectors with Grafo 112X (skin-over) grease (Toro Part No. 505-47) or petroleum jelly to prevent corrosion.

Checking the Fuses

The fuses are located under the operator’s control panel.

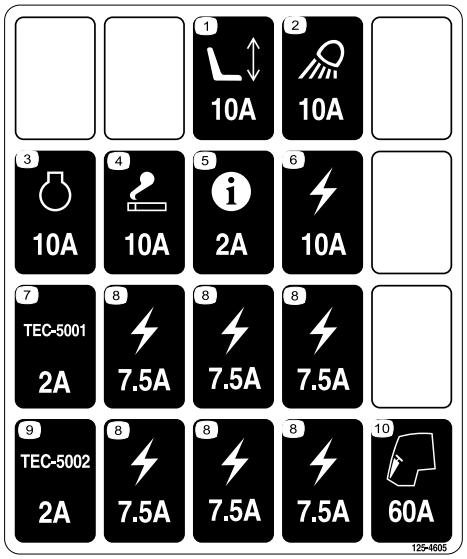

decal125-4605

Figure 59

Park the machine on a level surface, lower the cutting units, engage the parking brake, shut off the engine, and remove the key.

Unhook the latch and raise the operator's console panel (Figure 60) to expose the fuses (Figure 61).

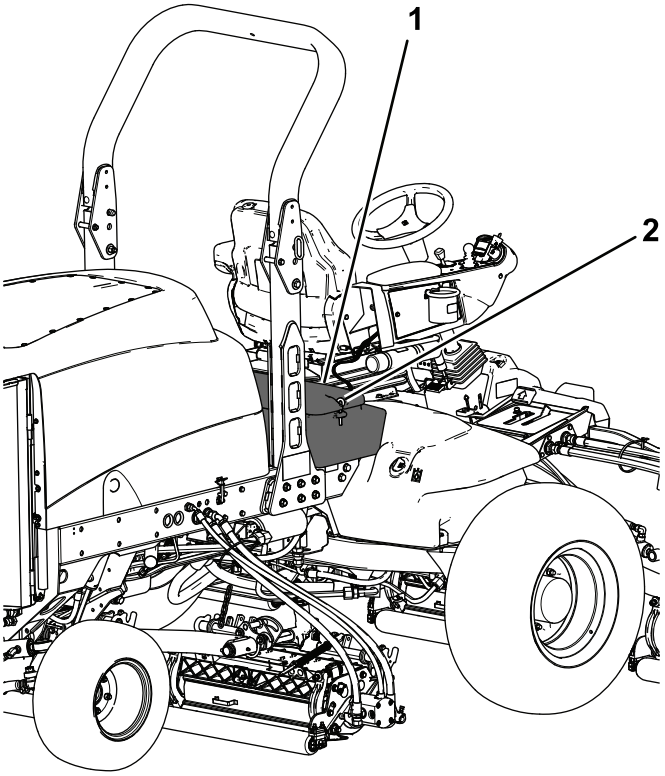

g200376

Figure 60

1. Operator's console panel 2. Latch

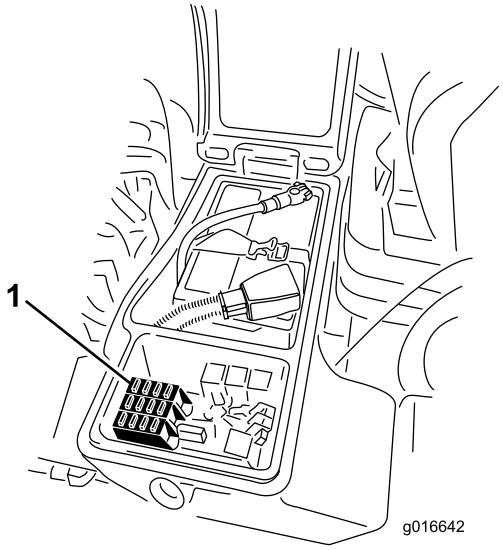

g016642

g016642

Figure 61

1. Fuses

Drive System Maintenance

Checking the Tire Pressure

Service Interval: Before each use or daily

The tires are overinflated for shipping. Therefore, release some of the air to reduce the pressure. The correct air pressure in the tires is 83 to 103 kPa (12 to 15 psi). Check the tire pressure daily.

Important: **Maintain the recommended pressure in all tires to ensure a good quality of cut and proper machine performance. Do not underinflate the tires.**

Checking the Torque of the Wheel Nuts

Service Interval: After the first 8 hours

Every 200 hours

Park the machine on a level surface, lower the cutting units, engage the parking brake, shut off the engine, and remove the key.

⚠ WARNING

Failure to maintain proper torque of the wheel nuts could result in failure or loss of a wheel and may result in personal injury.

Torque the front and rear wheel nuts to 115 to 136 N·m (85 to 100 ft-lb) after 1 to 4 hours of operation and again after 8 hours of operation. Torque the wheel nuts every 200 hours thereafter.

Note: The front wheel nuts are 1/2–20 UNF. The rear wheel nuts are M12 x 1.6-6H (metric).

Checking for End-Play in the Planetary Drives

Service Interval: Every 400 hours

There should be no end-play in the planetary drives/drive wheels (i.e., the wheels should not move when you pull or push them in a direction parallel to the axle).

1. Park the machine on a level surface, engage the parking brake, lower the cutting units, shut off the engine, and remove the key.
2. Chock the rear wheels and raise the front of machine, supporting the front axle/frame on jack stands.

⚠ DANGER

A machine on a jack may be unstable and slip off the jack, injuring anyone beneath it.

- **Do not start the engine while the machine is on a jack.**
- **Always remove the key from the switch before getting off the machine.**
- **Block the tires when you are raising the machine with a jack.**
- **Support the machine with jack stands.**

3. Grasp 1 of the front drive wheels and push/pull it toward and away from the machine, noting any movement.

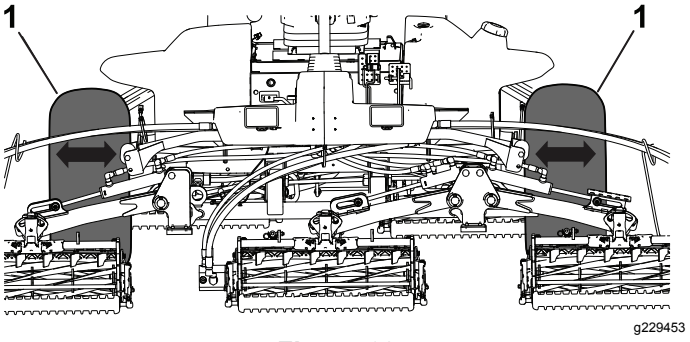

Figure 62

1. Front drive wheels

4. Repeat step 3 for the other drive wheel.
5. If either wheel moves, contact your authorized Toro distributor to have the planetary drive rebuilt.

Checking the Planetary Gear-Drive Lubricant

Service Interval: Every 400 hours (check if you notice external leakage).

Lubricant Specification: high quality SAE 85W-140 gear lubricant

1. Park the machine on level surface, position the wheel so that the fill plug is at the 12 o'clock position, the check plug is at 3 o'clock position, and the drain plug is at the 6 o'clock position (Figure 63).

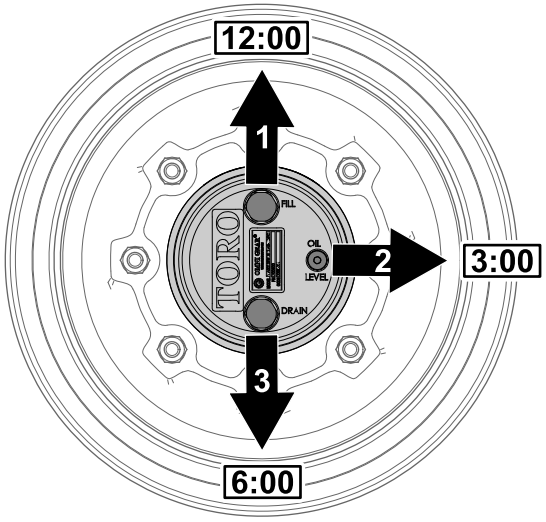

g225612

Figure 63

1. Fill plug (12 o'clock position)
2. Check plug (3 o'clock position)
3. Drain plug (6 o'clock position)

2. Remove the check plug at the 3 o'clock position (Figure 63).

   The oil level should be at the bottom of the check-plug hole.

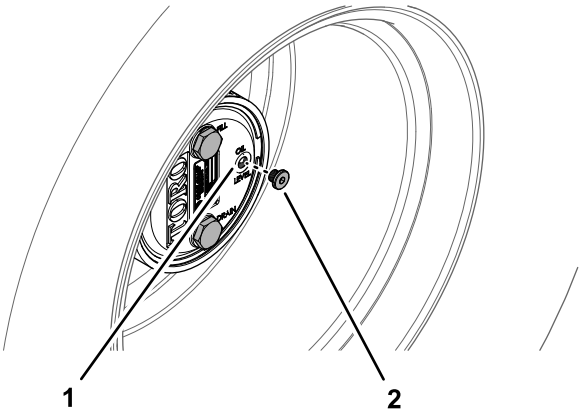

g225606

Figure 64

1. Check-plug hole
2. Check plug

3. If the oil level is low, remove the fill plug at the 12 o'clock position and add oil until it begins to flow out of the hole at the 3 o'clock position.
4. Check the O-ring for the plug(s) for wear or damage.

   Note: Replace the O-ring(s) as needed.
5. Install the plug(s).
6. Repeat steps 1 through 5 on the planetary gear assembly at the other side of the machine.

Changing the Planetary-Gear-Drive Oil

Service Interval: After the first 200 hours

Every 800 hours or yearly, whichever comes first.

Lubricant specification: high quality SAE 85W-140 gear lubricant

Planetary and brake housing lubrication capacity: 0.65 L (22 fl oz)

Draining the Planetary-Gear-Drive

1. Park the machine on level surface, position the wheel so that the fill plug is at the 12 o'clock position, the check plug is at 3 o'clock position, and the drain plug is at the 6 o'clock position; refer to Figure 63 in Checking the Planetary Gear-Drive Lubricant (page 48).
2. Remove the fill plug at the 12 o'clock position and the check plug at the 3 o'clock position (Figure 65).

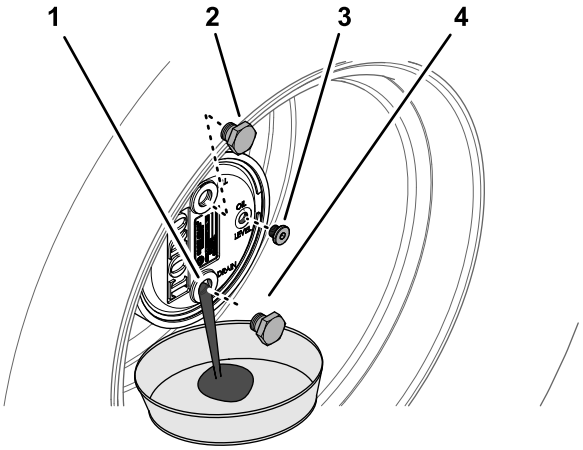

g225609

Figure 65

1. Drain-plug hole
2. Fill plug
3. Check plug
4. Drain plug

3. Place a drain pan under the planetary hub, remove the drain plug at the 6 o'clock position, and allow the oil to fully drain (Figure 65).
4. Check the O-rings for the fill, check, and drain plugs for wear or damage.

   Note: Replace the O-ring(s) as needed.
5. Install the drain plug into the drain hole of the planetary housing (Figure 65).
6. Place a drain pan under the brake housing, remove the drain plug, and allow the oil to fully drain (Figure 66).

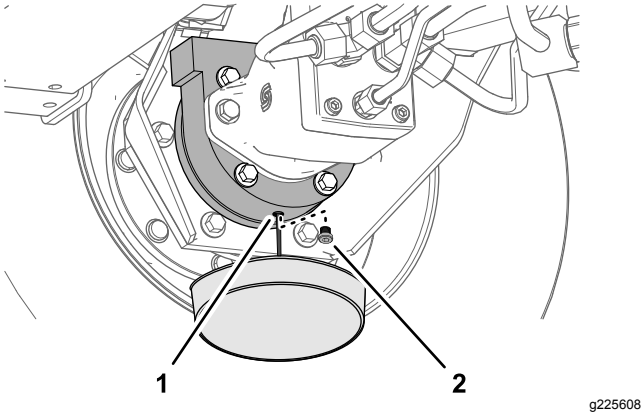

g225608

Figure 66

1. Drain hole (brake housing) 2. Drain plug

7. Check the O-ring for the plug for wear or damage and install the drain plug into the brake housing.

   Note: Replace the O-ring as needed.

Filling the Planetary-Gear-Drive with Lubricant

1. Through the fill-plug hole, slowly fill the planetary with 0.65 L (22 fl oz) of high quality SAE 85W-140 wt gear lube.

   Important: **If the planetary fills before you add 0.65 L (22 fl oz) of oil, wait 1 hour or install the plug and move the machine approximately 3 m (10 ft) to distribute the oil through the brake system. Then, remove the plug and add the remaining oil.**

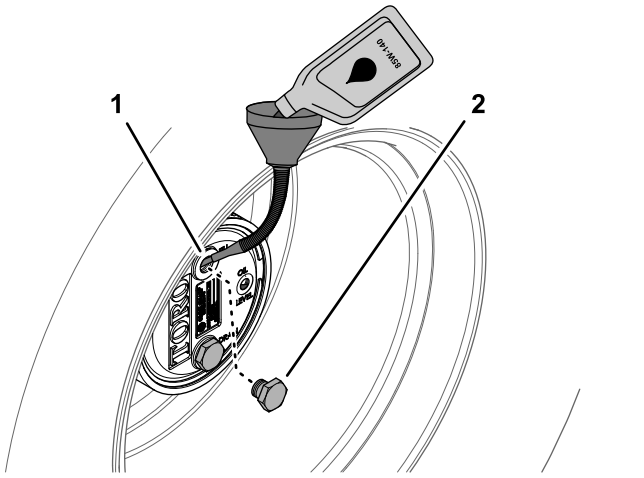

g225610

Figure 67

1. Fill-plug hole (planetary housing) 2. Fill plug

2. Install the fill plug and the check plug.
3. Wipe clean the planetary and brake housings (Figure 68).

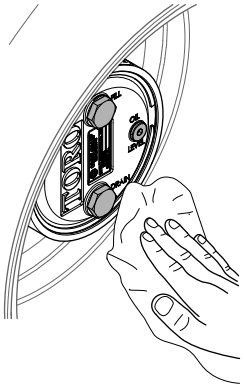

g225607

Figure 68

4. Repeat steps 1 through 7 in Draining the Planetary-Gear-Drive (page 49) and steps 1 through 3 in this procedure for the planetary/brake assembly at the other side of the machine.

Checking the Oil Level of the Rear Axle

Service Interval: Before each use or daily

Every 400 hours (Also check the oil level before you start the engine for the first time.)

The rear axle is shipped from the factory filled with SAE 85W-140 gear lubricant. The capacity is 2.4 L (80 fl oz).

1. Park the machine on a level surface, lower the cutting units, engage the parking brake, shut off the engine, and remove the key.
2. Remove a check plug from 1 end of the axle (Figure 69) and make sure that the oil is up to the bottom of the hole. If the level is low, remove the fill plug (Figure 69) and add enough oil to bring the level up to the bottom of the check-plug holes.

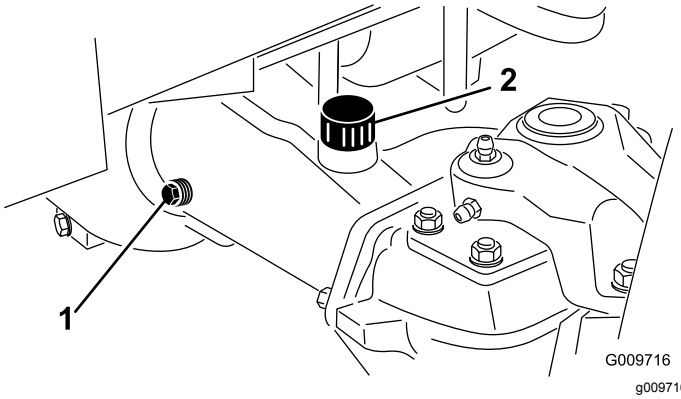

G009716

g009716

Figure 69

1. Check plug 2. Fill plug

Changing the Oil in the Rear Axle

Service Interval: After the first 200 hours

Every 800 hours

1. Park the machine on a level surface, lower the cutting units, engage the parking brake, shut off the engine, and remove the key.
2. Clean the area around the 3 drain plugs, 1 on each end and 1 in the center (Figure 70).

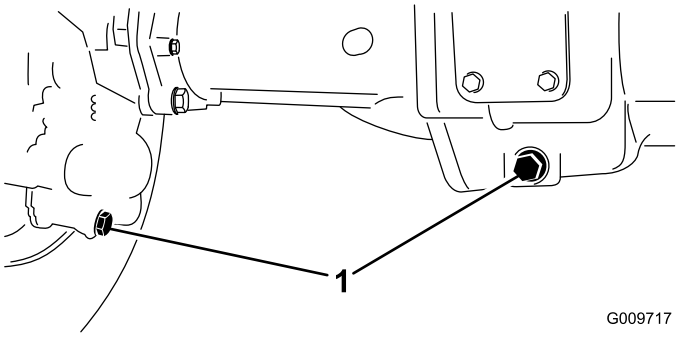

Figure 70

1. Drain plugs

3. Remove the oil-level-check plugs and the main axle vent cap to ease in draining of the oil.
4. Remove the drain plugs and allow the oil to drain into the pans.
5. Install the plugs.
6. Remove a check plug and fill the axle with approximately 2.37 L (80 fl oz) of 85W-140 gear lube or until the oil is up to the bottom of the hole.
7. Install the check plug.

Checking the Lubricant in the Gear Box of the Rear Axle

Service Interval: Before each use or daily

Every 400 hours (Also check the lubricant before you first start the engine.)

The gear box is filled with SAE 85W-140 gear lubricant. The capacity is 0.5 L (16 fl oz).

1. Park the machine on a level surface, lower the cutting units, engage the parking brake, shut off the engine, and remove the key.
2. Remove the check/fill plug from the left side of the gear box (Figure 71) and make sure that lubricant is up to the bottom of the hole. If the level is low, add enough lubricant to bring the level up to the bottom of the hole.

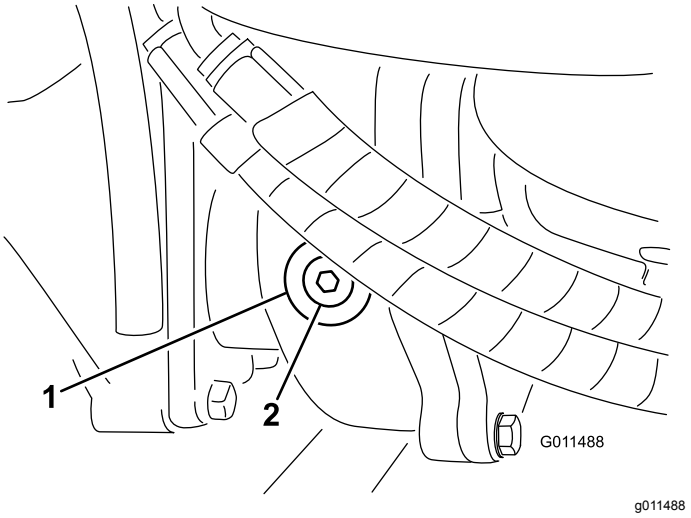

Figure 71

1. Gear box
2. Check/fill plug

Adjusting the Traction Drive for Neutral

The machine must not creep when the traction pedal is released. If it does creep, an adjustment is required.

1. Park the machine on a level surface, shut off the engine, position the speed control into the low range, and lower the cutting units.
2. Press only the right brake pedal and engage the parking brake.
3. Jack up the left side of the machine until the left front tire is off the shop floor. Support the machine with jack stands to prevent it from falling accidentally.
4. Start the engine and allow it run at low idle.
5. Adjust the jam nuts on the pump rod end to move the pump control tube forward to eliminate forward creep or rearward to eliminate rearward creep (Figure 72).

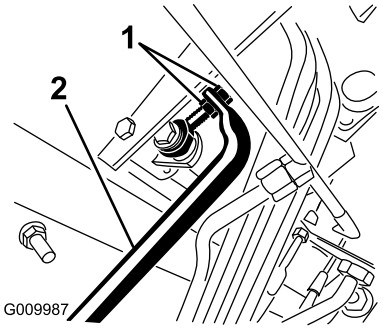

Figure 72

1. Pump-rod jam nuts
2. Pump control tube

6. After the wheel rotation ceases, tighten the jam nuts to secure the adjustment.
7. Shut off the engine and release the right brake.
8. Remove the jack stands and lower the machine to the shop floor.
9. Test drive the machine to ensure that it does not creep.

Checking the Rear-Wheel Toe-In

Service Interval: Every 800 hours/Yearly (whichever comes first)

1. Park the machine on a level surface, lower the cutting units, engage the parking brake, shut off the engine, and remove the key.
2. Measure the center-to-center distance (at axle height) at the front and rear of the steering tires.

   Note: The front measurement must be 3 mm (1/8 inch) less than the rear measurement (Figure 73).

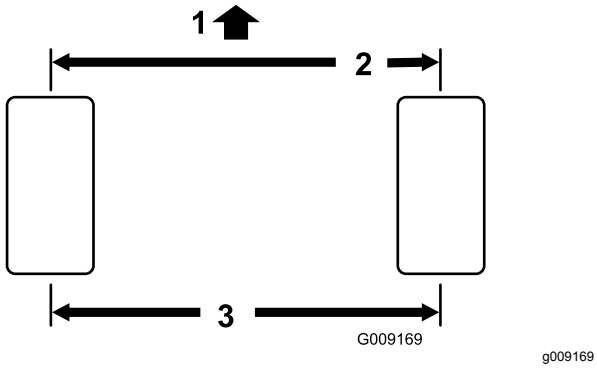

g009169

Figure 73

1. Front of the traction unit
2. 3 mm (1/8 inch) less than the rear of the tire
3. Center-to-center distance

3. To adjust the toe-in, remove the cotter pin and the nut from either tie-rod ball joint (Figure 74).

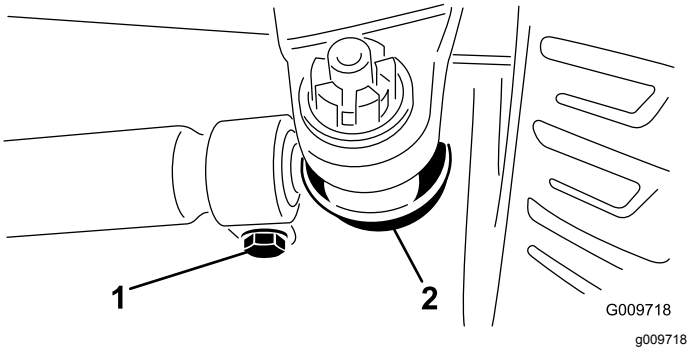

g009718

Figure 74

1. Tie-rod clamp
2. Tie-rod ball joint

4. Remove the tie-rod ball joint from the axle case support.
5. Loosen the clamps at both ends of the tie rods (Figure 74).
6. Rotate the detached ball joint inward or outward 1 complete revolution.
7. Tighten the clamp at the loose end of the tie rod.
8. Rotate the entire tie-rod assembly the same direction (inward or outward) 1 complete revolution.
9. Tighten the clamp at the connected end of the tie rod.
10. Install the ball joint in the axle case support and tighten the nut finger tight.
11. Measure the toe-in.
12. Repeat the procedure if necessary.
13. Tighten the nut and install a new cotter pin when the adjustment is correct.

Cooling System Maintenance

Cooling System Safety

- Swallowing engine coolant can cause poisoning; keep out of reach from children and pets.
- Discharge of hot, pressurized coolant or touching a hot radiator and surrounding parts can cause severe burns.
  - Always allow the engine to cool at least 15 minutes before removing the radiator cap.
  - Use a rag when opening the radiator cap, and open the cap slowly to allow steam to escape.

Checking the Cooling System

Service Interval: Before each use or daily

Check the level of the coolant at the beginning of each day. The capacity of the system is 12.3 L (13 US qt).

1. Carefully remove the radiator cap.

⚠ CAUTION

If the engine has been running, the pressurized, hot coolant can escape and cause burns.

- **Do not open the radiator cap when the engine is running.**
- **Use a rag when opening the radiator cap, and open the cap slowly to allow steam to escape.**

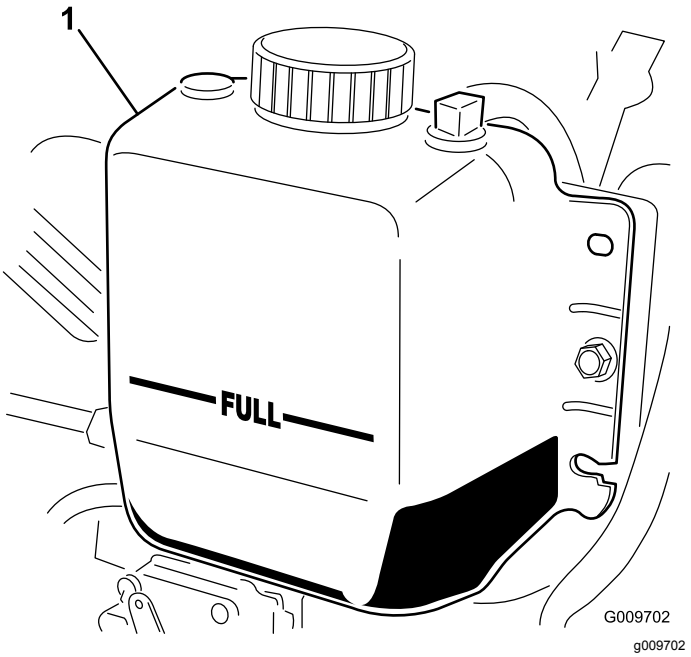

Figure 75

1. Expansion tank

2. Check the coolant level in the radiator.

   Note: The radiator should be filled to the top of the filler neck and the expansion tank filled to the Full mark (Figure 75).

3. If the coolant is low, add a 50/50 mixture of water and ethylene glycol antifreeze.

   Note: Do not use water only or alcohol/methanol-based coolants.

4. Install the radiator cap and the expansion-tank cap.

Servicing the Engine Cooling System

Service Interval: Before each use or daily

Remove debris from the engine area, oil cooler, and radiator daily. Clean them more frequently in dirty conditions.

1. Park the machine on a level surface, lower the cutting units, engage the parking brake, shut off the engine, and remove the key.
2. Unlatch and swing open the rear screen (Figure 76).

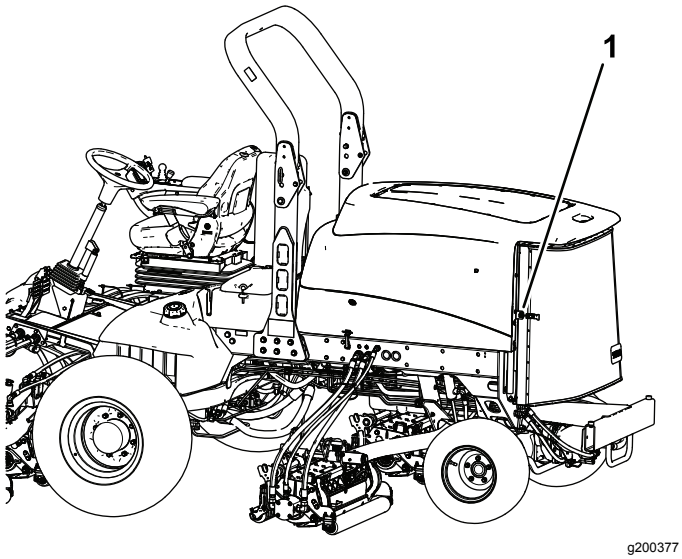

Figure 76

1. Rear screen latch

3. Clean the screen thoroughly of all debris.

   Note: To remove the screen, lift off the hinge pins.

4. Clean both sides of the oil cooler/radiator area (Figure 77) thoroughly with compressed air. Start from the front and blow the debris out toward the back. Then clean from the back side and blow toward the front. Repeat the procedure several times until all chaff and debris is removed.

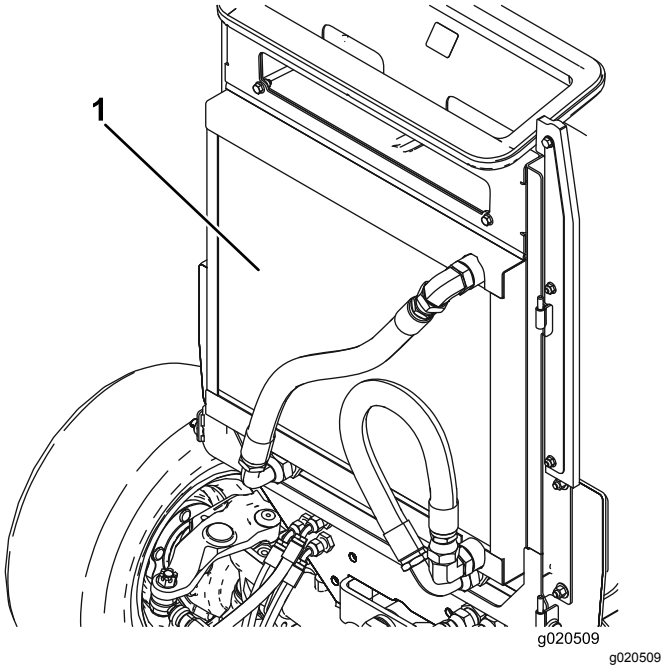

Figure 77

1. Oil cooler/radiator

Important: **Cleaning the oil cooler/radiator with water will promote premature corrosion damage to components and compact debris.**

5. Close the rear screen and secure it with the latch.

Brake Maintenance

Adjusting the Service Brakes

Adjust the service brakes when there is more than 13 mm (1/2 inch) of free travel of the brake pedal, or when the brakes do not work effectively. Free travel is the distance the brake pedal moves before braking resistance is felt.

1. Park the machine on a level surface, lower the cutting units, engage the parking brake, shut off the engine, and remove the key.
2. Disengage the locking latch from the brake pedals so that both pedals work independently of each other.
3. To reduce free travel of the brake pedals, tighten the brakes as follows:

   A. Loosen the front nut on the threaded end of the brake cable (Figure 78).

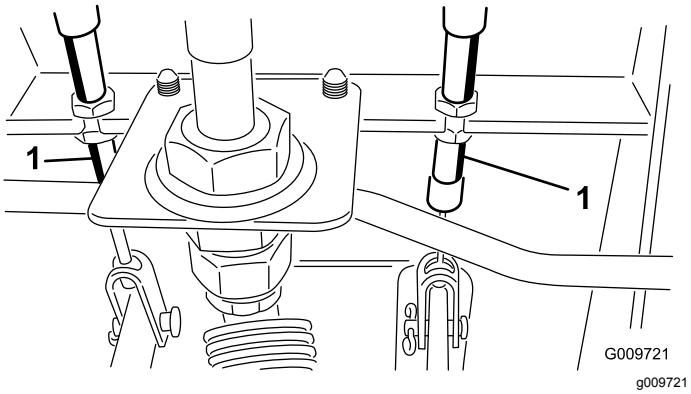

Figure 78

1. Brake cable

   B. Tighten the rear nut to move the cable backward until the brake pedals have 0 to 13 mm (0 to 1/2 inch) of free travel.

      Note: Make sure that there is no brake tension when you release the pedal.

   C. Tighten the front nuts after the brakes are adjusted correctly.

Belt Maintenance

Servicing the Alternator Belt

Service Interval: Every 100 hours

1. Proper tension allows 10 mm (3/8 inch) of deflection when you apply a force of 45 N (10 lb) on the belt midway between the pulleys.
2. If the deflection is not 10 mm (3/8 inch), loosen the alternator mounting bolts (Figure 79).

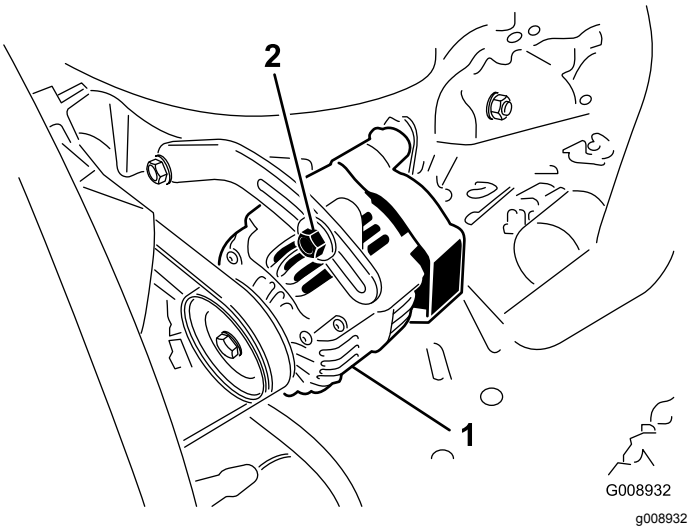

Figure 79

1. Alternator
2. Mounting bolt

3. Increase or decrease the tension of the alternator belt and tighten the bolts.
4. Check the deflection of the belt again to ensure that the tension is correct.

Hydraulic System Maintenance

Hydraulic System Safety

- Seek immediate medical attention if fluid is injected into skin. Injected fluid must be surgically removed within a few hours by a doctor.
- Ensure that all hydraulic-fluid hoses and lines are in good condition and all hydraulic connections and fittings are tight before applying pressure to the hydraulic system.
- Keep your body and hands away from pinhole leaks or nozzles that eject high-pressure hydraulic fluid.
- Use cardboard or paper to find hydraulic leaks.
- Safely relieve all pressure in the hydraulic system before performing any work on the hydraulic system.

Checking the Hydraulic Lines and Hoses

Service Interval: Before each use or daily

Check the hydraulic lines and hoses for leaks, kinked lines, loose mounting supports, wear, loose fittings, weather deterioration, and chemical deterioration. Make all necessary repairs before operating.

Checking the Level of the Hydraulic Fluid

Service Interval: Before each use or daily

The reservoir is filled at the factory with high-quality hydraulic fluid. Check the level of the hydraulic fluid before you first start the engine and daily thereafter.

1. Park the machine on a level surface, lower the cutting units, engage the parking brake, shut off the engine, and remove the key.
2. Clean the area around the filler neck and cap of the hydraulic tank (Figure 80).

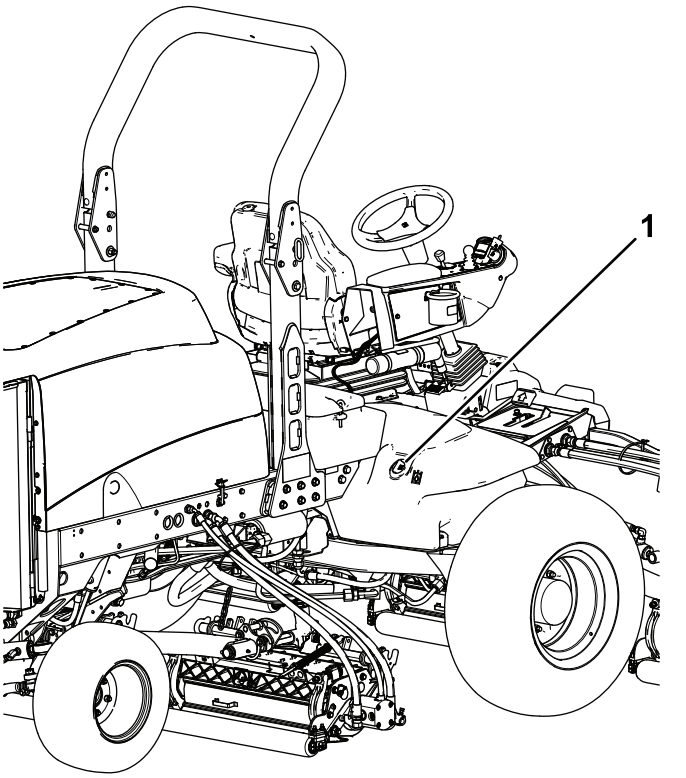

Figure 80

1. Hydraulic-tank cap

3. Remove the cap from the filler neck.
4. Remove the dipstick from the filler neck and wipe it with a clean rag.
5. Insert the dipstick into the filler neck; then remove it and check the fluid level.

   The fluid level should be between the 2 marks on the dipstick.
6. If the level is low, add the appropriate fluid to raise the level to the upper mark.
7. Install the dipstick and cap onto the filler neck.

Hydraulic Fluid Specifications

The reservoir is filled at the factory with high-quality hydraulic fluid. Check the level of the hydraulic fluid before you first start the engine and daily thereafter; refer to Checking the Level of the Hydraulic Fluid (page 56).

Recommended hydraulic fluid: Toro PX Extended Life Hydraulic Fluid; available in 19 L (5 US gallon) pails or 208 L (55 US gallon) drums.

Note: A machine using the recommended replacement fluid requires less frequent fluid and filter changes.

Alternative hydraulic fluids: If Toro PX Extended Life Hydraulic Fluid is not available, you may use another conventional, petroleum-based hydraulic fluid having specifications that fall within the listed range for all the following material properties and that it meets industry standards. Do not use synthetic fluid. Consult with your lubricant distributor to identify a satisfactory product.

Note: Toro does not assume responsibility for damage caused by improper substitutions, so use products only from reputable manufacturers who will stand behind their recommendation.

High Viscosity Index/Low Pour Point Anti-wear Hydraulic Fluid, ISO VG 46

Material Properties:	
Viscosity, ASTM D445	cSt @ 40°C (104°F) 44 to 48
Viscosity Index ASTM D2270	140 or higher
Pour Point, ASTM D97	-37°C to -45°C (-34°F to -49°F)
Industry Specifications:	Eaton Vickers 694 (I-286-S, M-2950-S/35VQ25 or M-2952-S)

Note: Many hydraulic fluids are almost colorless, making it difficult to spot leaks. A red dye additive for the hydraulic fluid is available in 20 ml (0.67 fl oz) bottles. A bottle is sufficient for 15 to 22 L (4 to 6 US gallons) of hydraulic fluid. Order Part No. 44-2500 from your authorized Toro distributor.

Important: **Toro Premium Synthetic Biodegradable Hydraulic Fluid is the only synthetic biodegradable fluid approved by Toro. This fluid is compatible with the elastomers used in Toro hydraulic systems and is suitable for a wide-range of temperature conditions. This fluid is compatible with conventional mineral oils, but for maximum biodegradability and performance, the hydraulic system should be thoroughly flushed of conventional fluid. The oil is available in 19 L (5 US gallons) pails or 208 L (55 US gallons) from your authorized Toro distributor.**

Hydraulic Fluid Capacity

28.4 L (7.5 US gallons); refer to Hydraulic Fluid Specifications (page 56)

Changing the Hydraulic Fluid

Service Interval: Every 2,000 hours—**If you are using the recommended hydraulic fluid,** change the hydraulic fluid.

Every 800 hours—**If you are not using the recommended hydraulic fluid or have ever filled the reservoir with an alternative fluid,** change the hydraulic fluid.

If the fluid becomes contaminated, contact your local authorized Toro distributor, because the system must be flushed. Contaminated fluid looks milky or black when compared to clean fluid.

1. Park the machine on a level surface, lower the cutting units, engage the parking brake, shut off the engine, and remove the key.
2. Raise the hood.
3. Disconnect the case return line from the bottom of the reservoir and let the hydraulic fluid flow into a large drain pan.
4. Connect the line when the hydraulic fluid stops draining.
5. Fill the reservoir with hydraulic fluid; refer to Hydraulic Fluid Specifications (page 56) and Hydraulic Fluid Capacity (page 57).

   Important: **Use only the hydraulic fluids specified. Other fluids could cause system damage.**
6. Install the reservoir cap.
7. Start the engine and use all of the hydraulic controls to distribute hydraulic fluid throughout the system.
8. Check for leaks and shut off the engine.
9. Check the fluid level and add enough to raise the level to the Full mark on the dipstick.

   Note: Do not overfill the hydraulic system.

Replacing the Hydraulic Filters

Service Interval: Every 1,000 hours—**If you are using the recommended hydraulic fluid,** replace the hydraulic filters.

Every 800 hours—**If you are not using the recommended hydraulic fluid or have ever filled the reservoir with an alternative fluid,** replace the hydraulic filters.

Use Toro replacement filters Part No. 94-2621 for the rear (cutting unit) of the machine and Part No. 75-1310 for the front (charge) of the machine.

Important: **Using another type of filter may void the warranty on some components.**

1. Park the machine on a level surface, lower the cutting units, engage the parking brake, shut off the engine, and remove the key.
2. Clean the area around the filter mounting area.
3. Place a drain pan under the filter and remove the filter (Figure 81 and Figure 82).
4. Lubricate the new filter gasket and fill the filter with hydraulic fluid.

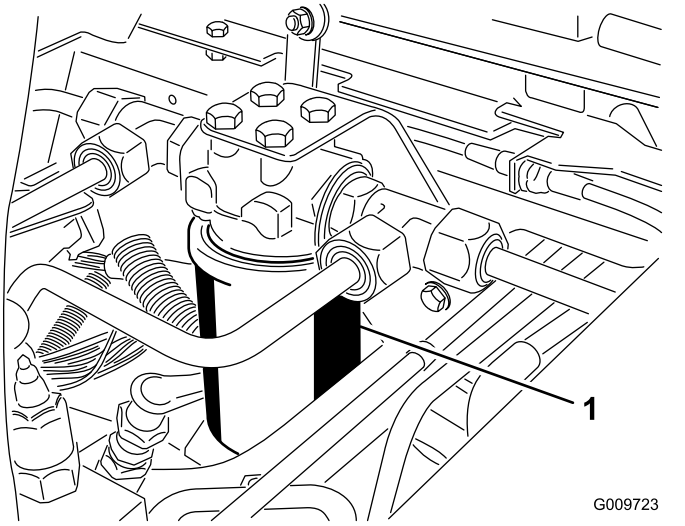

Figure 81

1. Hydraulic filter

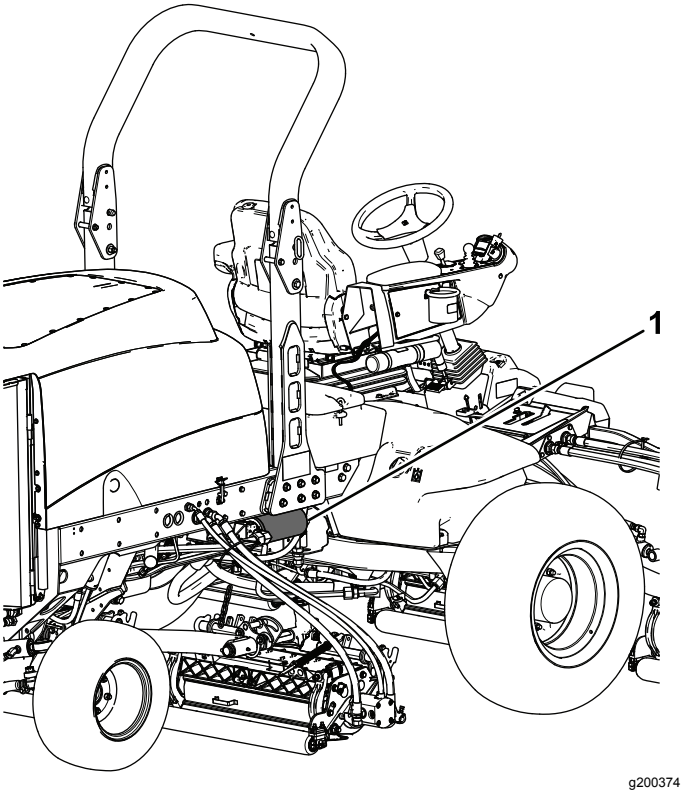

Figure 82

1. Hydraulic filter

5. Ensure that the filter mounting area is clean.
6. Screw the filter on until the gasket contacts the mounting plate; then tighten the filter an additional 1/2 turn.
7. Start the engine and let it run for about 2 minutes to purge air from the system.
8. Shut off the engine and check for leaks.

Cutting Unit Maintenance

Blade Safety

- A worn or damaged blade or bedknife can break, and a piece could be thrown toward you or bystanders, resulting in serious personal injury or death.
- Inspect the cutting units periodically for excessive wear or damage.
- Use care when checking the cutting units. Wrap the blades or wear gloves, and use caution when servicing the reels and bedknives. Only replace or sharpen the reels and bedknives; never straighten or weld them.
- On machines with multiple cutting units, take care when rotating a reel; it can cause the reels in the other cutting units to rotate.

Backlapping the Cutting Units

⚠ WARNING

Contact with the reels or other moving parts can result in personal injury.

- **Keep your fingers, hands, and clothing away from the reels or other moving parts.**
- **Never attempt to turn the reels by hand or foot while the engine is running.**

Note: When backlapping, the front units all operate together, and the rear units operate together.

1. Park the machine on a level surface, lower the cutting units, engage the parking brake, shut off the engine, and move the PTO switch to the OFF position.
2. Unlock and raise the hood to expose the controls.
3. Make initial reel-to-bedknife adjustments appropriate for backlapping on all cutting units which are to be backlapped; refer to the cutting unit *Operator's Manual*.
4. Select either front, rear, or both backlap levers to determine which units to backlap (Figure 83).
5. Start the engine and run at low idle speed.

⚠ DANGER

Changing the engine speed while backlapping may cause the reels to stall.

- **Never change the engine speed while backlapping.**
- **Backlap only at low idle engine speed.**

⚠ DANGER

Contact with the cutting units could cause personal injury.

Be certain that you are clear of the cutting units before proceeding.

6. With the mow-speed limiter in the MOW position, move the PTO switch to the ON position.
7. Press the lift switch to start the backlapping operation on the designated reels.
8. Apply lapping compound with a long-handled brush.

   Note: Do not use a short-handled brush.

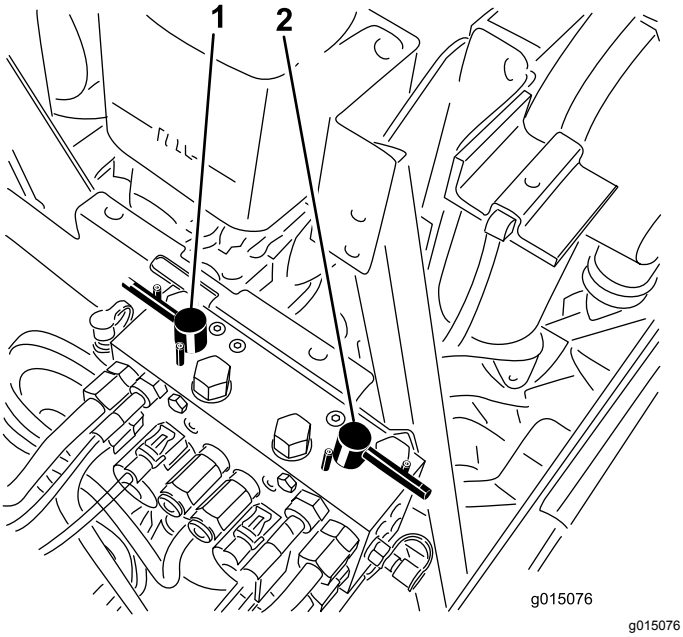

g015076

Figure 83

1. Front-backlap lever
2. Rear-backlap lever

9. If the reels stall or become erratic while backlapping, increase the throttle speed until the reel stabilizes.
10. To make an adjustment to the cutting units while backlapping, turn the reels off by pressing the rear of the lift switch; move the PTO switch to the OFF position and shut off the engine. After completing any adjustments, repeat steps 5 through 9.

11. Repeat the procedure for all cutting units that you want to backlap.
12. When finished, return the backlap levers to the MOW position, lower the hood, and wash all lapping compound off the cutting units. Adjust the cutting unit reel-to-bedknife as needed. Move the cutting unit reel-speed controls to the desired mowing position.

    Important: **If you do not return the backlap switch to the OFF position after backlapping, the cutting units will not raise or function properly.**

    Note: Additional instructions and procedures on backlapping are available in the Toro *Sharpening Reel and Rotary Mowers Manual*, Form No. 80-300SL.

    Note: For a better cutting edge, run a file across the front face of the bedknife after lapping. This removes any burrs or rough edges that may have built up on the cutting edge.

Cleaning

Washing the Machine

Wash the machine as needed using water alone or with a mild detergent. You may use a rag when washing the machine.

Important: **Do not use brackish or reclaimed water to clean the machine.**

Important: **Do not use power-washing equipment to wash the machine. Power-washing equipment may damage the electrical system, loosen important decals, or wash away necessary grease at friction points. Avoid excessive use of water near the control panel, engine, and battery.**

Important: **Do not wash the machine with the engine running. Washing the machine with the engine running may result in internal engine damage.**

Storage

Storage Safety

- Shut off the engine, remove the key (if equipped), and wait for all movement to stop before you leave the operator's position. Allow the machine to cool before adjusting, servicing, cleaning, or storing it.
- Do not store the machine or fuel container where there is an open flame, spark, or pilot light, such as on a water heater or other appliance.

Preparing the Traction Unit

1. Park the machine on a level surface, lower the cutting units, engage the parking brake, shut off the engine, and remove the key.
2. Thoroughly clean the traction unit, cutting units, and the engine.
3. Check the tire pressure; refer to Checking the Tire Pressure (page 48).
4. Check all fasteners for looseness; tighten them as necessary.
5. Grease or oil all grease fittings and pivot points. Wipe up any excess lubricant.
6. Lightly sand and use touch-up paint on painted areas that are scratched, chipped, or rusted. Repair any dents in the metal body.
7. Service the battery and cables as follows; refer to Electrical System Safety (page 46):
   A. Remove the battery terminals from the battery posts.
   B. Clean the battery, terminals, and posts with a wire brush and baking-soda solution.
   C. Coat the cable terminals and battery posts with Grafo 112X skin-over grease (Toro Part No. 505-47) or petroleum jelly to prevent corrosion.
   D. Slowly charge the battery every 60 days for 24 hours to prevent lead sulfation of the battery.

Preparing the Engine

1. Drain the engine oil from the oil pan and install the drain plug.
2. Remove and discard the oil filter. Install a new oil filter.
3. Fill the engine with specified motor oil.
4. Start the engine and run it at idle speed for approximately 2 minutes.
5. Shut off the engine and remove the key.
6. Flush the fuel tank with fresh, clean fuel.
7. Secure all of the fuel-system fittings.
8. Thoroughly clean and service the air-cleaner assembly.
9. Seal the air-cleaner inlet and the exhaust outlet with weatherproof tape.
10. Check the antifreeze protection and add a 50/50 solution of water and ethylene glycol antifreeze as needed for the expected minimum temperature in your area.

EEA/UK Privacy Notice

Toro's Use of Your Personal Information

The Toro Company ("Toro") respects your privacy. When you purchase our products, we may collect certain personal information about you, either directly from you or through your local Toro company or dealer. Toro uses this information to fulfil contractual obligations - such as to register your warranty, process your warranty claim or to contact you in the event of a product recall - and for legitimate business purposes - such as to gauge customer satisfaction, improve our products or provide you with product information which may be of interest. Toro may share your information with our subsidiaries, affiliates, dealers or other business partners in connection these activities. We may also disclose personal information when required by law or in connection with the sale, purchase or merger of a business. We will never sell your personal information to any other company for marketing purposes.

Retention of your Personal Information

Toro will keep your personal information as long as it is relevant for the above purposes and in accordance with legal requirements. For more information about applicable retention periods please contact legal@toro.com.

Toro's Commitment to Security

Your personal information may be processed in the US or another country which may have less strict data protection laws than your country of residence. Whenever we transfer your information outside of your country of residence, we will take legally required steps to ensure that appropriate safeguards are in place to protect your information and to make sure it is treated securely.

Access and Correction

You may have the right to correct or review your personal data, or object to or restrict the processing of your data. To do so, please contact us by email at legal@toro.com. If you have concerns about the way in which Toro has handled your information, we encourage you to raise this directly with us. Please note that European residents have the right to complain to your Data Protection Authority.

California Proposition 65 Warning Information

What is this warning?

You may see a product for sale that has a warning label like the following:



WARNING: Cancer and Reproductive Harm—www.p65Warnings.ca.gov.

What is Prop 65?

Prop 65 applies to any company operating in California, selling products in California, or manufacturing products that may be sold in or brought into California. It mandates that the Governor of California maintain and publish a list of chemicals known to cause cancer, birth defects, and/or other reproductive harm. The list, which is updated annually, includes hundreds of chemicals found in many everyday items. The purpose of Prop 65 is to inform the public about exposure to these chemicals.

Prop 65 does not ban the sale of products containing these chemicals but instead requires warnings on any product, product packaging, or literature with the product. Moreover, a Prop 65 warning does not mean that a product is in violation of any product safety standards or requirements. In fact, the California government has clarified that a Prop 65 warning "is not the same as a regulatory decision that a product is 'safe' or 'unsafe.'" Many of these chemicals have been used in everyday products for years without documented harm. For more information, go to https://oag.ca.gov/prop65/faqs-view-all.

A Prop 65 warning means that a company has either (1) evaluated the exposure and has concluded that it exceeds the "no significant risk level"; or (2) has chosen to provide a warning based on its understanding about the presence of a listed chemical without attempting to evaluate the exposure.

Does this law apply everywhere?

Prop 65 warnings are required under California law only. These warnings are seen throughout California in a wide range of settings, including but not limited to restaurants, grocery stores, hotels, schools, and hospitals, and on a wide variety of products. Additionally, some online and mail order retailers provide Prop 65 warnings on their websites or in catalogs.

How do the California warnings compare to federal limits?

Prop 65 standards are often more stringent than federal and international standards. There are various substances that require a Prop 65 warning at levels that are far lower than federal action limits. For example, the Prop 65 standard for warnings for lead is 0.5 µg/day, which is well below the federal and international standards.

Why don't all similar products carry the warning?

- Products sold in California require Prop 65 labelling while similar products sold elsewhere do not.
- A company involved in a Prop 65 lawsuit reaching a settlement may be required to use Prop 65 warnings for its products, but other companies making similar products may have no such requirement.
- The enforcement of Prop 65 is inconsistent.
- Companies may elect not to provide warnings because they conclude that they are not required to do so under Prop 65; a lack of warnings for a product does not mean that the product is free of listed chemicals at similar levels.

Why does Toro include this warning?

Toro has chosen to provide consumers with as much information as possible so that they can make informed decisions about the products they buy and use. Toro provides warnings in certain cases based on its knowledge of the presence of one or more listed chemicals without evaluating the level of exposure, as not all the listed chemicals provide exposure limit requirements. While the exposure from Toro products may be negligible or well within the "no significant risk" range, out of an abundance of caution, Toro has elected to provide the Prop 65 warnings. Moreover, if Toro does not provide these warnings, it could be sued by the State of California or by private parties seeking to enforce Prop 65 and subject to substantial penalties.

The Toro Warranty

Two-Year or 1,500 Hours Limited Warranty

Conditions and Products Covered

The Toro Company and its affiliate, Toro Warranty Company, pursuant to an agreement between them, jointly warrant your Toro Commercial product (“Product”) to be free from defects in materials or workmanship for 2 years or 1,500 operational hours*, whichever occurs first. This warranty is applicable to all products with the exception of Aerators (refer to separate warranty statements for these products). Where a warrantable condition exists, we will repair the Product at no cost to you including diagnostics, labor, parts, and transportation. This warranty begins on the date the Product is delivered to the original retail purchaser.
* Product equipped with an hour meter.

Instructions for Obtaining Warranty Service

You are responsible for notifying the Commercial Products Distributor or Authorized Commercial Products Dealer from whom you purchased the Product as soon as you believe a warrantable condition exists. If you need help locating a Commercial Products Distributor or Authorized Dealer, or if you have questions regarding your warranty rights or responsibilities, you may contact us at:

Toro Commercial Products Service Department
Toro Warranty Company
8111 Lyndale Avenue South
Bloomington, MN 55420-1196

952–888–8801 or 800–952–2740
E-mail: commercial.warranty@toro.com

Owner Responsibilities

As the product owner, you are responsible for required maintenance and adjustments stated in your *Operator's Manual*. Repairs for product issues caused by failure to perform required maintenance and adjustments are not covered under this warranty.

Items and Conditions Not Covered

Not all product failures or malfunctions that occur during the warranty period are defects in materials or workmanship. This warranty does not cover the following:

- Product failures which result from the use of non-Toro replacement parts, or from installation and use of add-on, or modified non-Toro branded accessories and products.
- Product failures which result from failure to perform recommended maintenance and/or adjustments.
- Product failures which result from operating the Product in an abusive, negligent, or reckless manner.
- Parts consumed through use that are not defective. Examples of parts which are consumed, or used up, during normal Product operation include, but are not limited to, brake pads and linings, clutch linings, blades, reels, rollers and bearings (sealed or greasable), bed knives, spark plugs, castor wheels and bearings, tires, filters, belts, and certain sprayer components such as diaphragms, nozzles, and check valves.
- Failures caused by outside influence, including, but not limited to, weather, storage practices, contamination, use of unapproved fuels, coolants, lubricants, additives, fertilizers, water, or chemicals.
- Failure or performance issues due to the use of fuels (e.g. gasoline, diesel, or biodiesel) that do not conform to their respective industry standards.
- Normal noise, vibration, wear and tear, and deterioration. Normal “wear and tear” includes, but is not limited to, damage to seats due to wear or abrasion, worn painted surfaces, scratched decals or windows.

Parts

Parts scheduled for replacement as required maintenance are warranted for the period of time up to the scheduled replacement time for that part. Parts replaced under this warranty are covered for the duration of the original product warranty and become the property of Toro. Toro will make the final decision whether to repair any existing part or assembly or replace it. Toro may use remanufactured parts for warranty repairs.

Deep Cycle and Lithium-Ion Battery Warranty

Deep cycle and Lithium-Ion batteries have a specified total number of kilowatt-hours they can deliver during their lifetime. Operating, recharging, and maintenance techniques can extend or reduce total battery life. As the batteries in this product are consumed, the amount of useful work between charging intervals will slowly decrease until the battery is completely worn out. Replacement of worn out batteries, due to normal consumption, is the responsibility of the product owner. Note: (Lithium-Ion battery only): Pro-rated after 2 years. Refer to the battery warranty for additional information.

Maintenance is at Owner’s Expense

Engine tune-up, lubrication, cleaning and polishing, replacement of filters, coolant, and completing recommended maintenance are some of the normal services Toro products require that are at the owner’s expense.

General Conditions

Repair by an Authorized Toro Distributor or Dealer is your sole remedy under this warranty.

Neither The Toro Company nor Toro Warranty Company is liable for indirect, incidental or consequential damages in connection with the use of the Toro Products covered by this warranty, including any cost or expense of providing substitute equipment or service during reasonable periods of malfunction or non-use pending completion of repairs under this warranty. Except for the Emissions warranty referenced below, if applicable, there is no other express warranty. All implied warranties of merchantability and fitness for use are limited to the duration of this express warranty.

Some states do not allow exclusions of incidental or consequential damages, or limitations on how long an implied warranty lasts, so the above exclusions and limitations may not apply to you. This warranty gives you specific legal rights, and you may also have other rights which vary from state to state.

Note Regarding Emissions Warranty

The Emissions Control System on your Product may be covered by a separate warranty meeting requirements established by the U.S. Environmental Protection Agency (EPA) and/or the California Air Resources Board (CARB). The hour limitations set forth above do not apply to the Emissions Control System Warranty. Refer to the Engine Emission Control Warranty Statement supplied with your product or contained in the engine manufacturer’s documentation.

Countries Other than the United States or Canada

Customers who have purchased Toro products exported from the United States or Canada should contact their Toro Distributor (Dealer) to obtain guarantee policies for your country, province, or state. If for any reason you are dissatisfied with your Distributor's service or have difficulty obtaining guarantee information, contact your Authorized Toro Service Center.