FORM NO. 3322–577

TORO®

Recycler®

Walk-Behind Power Mower

Model No.: 20022, 20023, 20025, 20027, 20029, and 20061–9900001 & Up

Operator’s Manual

Para obtener una versión gratis de este manual en español, escriba a la dirección indicada más abajo. Asegúrese de indicar el modelo y el número de serie de su producto.

Pour obtenir gratuitement une version en français de ce manuel, écrivez à l’adresse ci–dessous. N’oubliez pas d’indiquer les numéros de modèle et de série de votre produit.

The Toro Company, Attn: Parts Dept., 8111 Lyndale Ave S, Bloomington, MN 55420–1196.

Contents

	Page
Introduction	2
Safety	3
Safe Operating Practices	3
Safety and Instruction Decals	5
Assembly	5
Unpacking the Mower	5
Assembling the Handle	5
Before Starting	6
Oil	6
Gasoline	6
Operation	7
Starting the Engine	7
Stopping the Engine	8
Self–propel Drive	8
Adjusting the Cutting Height	8
Operating Tips	8
Changing the Handle Height	9
Maintenance	10
Recommended Maintenance Schedule	10
Air Filter	11
Draining Gasoline	11
Change Engine Oil	12
Spark Plug	12
Adjusting the Self-propel Cable	12
Maintaining the Blade	13
Lubricating the Self–propel Drive	15
Cleaning the Underside of the Mower Housing	15
Cleaning Under the Belt Cover	16
Troubleshooting	16
Storage	17
Fuel	17
Preparing the Engine	18
Cleaning the Mower	18
General	18
Folding the Handle	18
Removing From Storage	18
Accessories	18
Rear Grass Catcher	18
Side Discharge Chute	21
Warranty	Back Cover

WARNING

The engine exhaust from this product contains chemicals known to the State of California to cause cancer, birth defects, or other reproductive harm.

Introduction

Thank you for purchasing a Toro product.

All of us at Toro want you to be completely satisfied with your new product, so feel free to contact your local Authorized Service Dealer for help with service, genuine Toro parts, or other information you may require.

Whenever you contact your Authorized Service Dealer or the factory, always know the model and serial numbers of your product. These numbers will help the Service Dealer or Service Representative provide exact information about your specific product. You will find the model and serial number decal located in a unique place on the product as shown below.

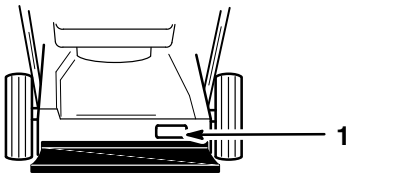

1. Model and Serial Number Decal

For your convenience, write the product model and serial numbers in the space below.

Model No: _____

Serial No. _____

Read this manual carefully to learn how to operate and maintain your product correctly. Reading this manual will help you and others avoid personal injury and damage to the product. Although Toro designs, produces and markets safe, state-of-the-art products, you are responsible for using the product properly and safely. You are also responsible for training persons who you allow to use the product about safe operation.

The Toro warning system in this manual identifies potential hazards and has special safety messages that help you and others avoid personal injury, even death.

©**The Toro Company – 1998**
All Rights Reserved

Printed in USA

DANGER, WARNING and CAUTION are signal words used to identify the level of hazard. However, regardless of the hazard, be extremely careful.

DANGER signals an extreme hazard that will cause serious injury or death if the recommended precautions are not followed.

WARNING signals a hazard that may cause serious injury or death if the recommended precautions are not followed.

CAUTION signals a hazard that may cause minor or moderate injury if the recommended precautions are not followed.

Two other words are also used to highlight information. “Important” calls attention to special mechanical information and “Note” emphasizes general information worthy of special attention.

The left and right side of the machine is determined by standing behind the handle in the normal operator’s position.

Safety

This machine meets or exceeds CPSC blade safety requirements for walk–behind rotary mowers and the B71.1 specifications of the American National Standards Institute, in effect at time of production. However, improper use or maintenance by the operator or owner can result in injury. To reduce the potential for injury, comply with these safety instructions and always pay attention to the safety alert ⚠ symbol which means CAUTION, WARNING or DANGER—“personal safety instruction.” Failure to comply with the instruction may result in personal injury.

⚠ WARNING ⚠

POTENTIAL HAZARD
- **Engine exhaust contains carbon monoxide, which is an odorless, deadly poison.**

WHAT CAN HAPPEN
- **Carbon monoxide can kill you and is also known to the State of California to cause birth defects.**

HOW TO AVOID THE HAZARD
- **Do not run engine indoors or in an enclosed area.**

Safe Operating Practices

This product is capable of amputating hands and feet and throwing objects. Always follow all safety instructions to avoid serious injury or death.

This mower is designed for cutting and recycling grass or, when equipped with a grass bag, for catching cut grass. Any use for purposes other than these could prove dangerous to the operator or bystanders.

Note: This engine is NOT equipped with a spark arrester muffler. Use or operation of this mower in the State of California on any forest-covered, brush-covered or unimproved grass-covered land, without an approved spark arrester muffler, is a violation of the law. Other states may have similar laws.

General Operation

- Read this manual carefully before operating the mower. Become familiar with the controls and proper use of the mower. Never allow children under 16 years of age to operate the mower. Never allow adults to operate mower without proper instructions.
- The operator of the mower is responsible for keeping everyone, especially children and pets, away from area of operation. The operator is responsible for accidents or hazards occurring to other people or their property.
- Thoroughly inspect the area where the mower will be used and remove sticks, stones, wire, and debris that could be picked up and thrown by the mower. Watch for foreign objects while mowing.
- Wear long pants and substantial shoes. Do not operate the mower while wearing open-toed shoes, jewelry, loose clothing, or when barefoot.
- Check the fuel level before starting the engine. Because fuel is highly flammable, handle it carefully.
  - Use an approved fuel container.
  - Fill the fuel tank outdoors, not indoors. **Never add fuel to an engine that is running or hot.**
  - Install a gas cap on the fuel container and gas tank, and wipe up any spilled gasoline before starting the engine.
  - Do not smoke while refueling.
- Keep all guards, shields, safety devices, cover-deflector assembly, optional grass catcher, optional side discharge chute, and/or optional discharge tunnel plug in place. Repair or replace damaged parts, including decals. Check all safety devices before each use.

- The engine, blade, and self–propel drive (self-propelled model) are designed to stop when the control bails are released. Ensure that the control and brake function properly before each use of the mower.
- Disengage the self-propel mechanism or drive clutch (self-propelled models) before starting the engine.
- Before using, always visually inspect the mower to ensure that the blades, blade fasteners, and cutter assembly are not worn or damaged. Replace worn or damaged blades and fasteners in sets to preserve balance.

While Operating

- Do not run the engine indoors.
- Start the engine carefully, according to instructions and with your feet well away from the blade.
- Always maintain secure footing. Keep a firm grip on the handle and walk; never run. Never operate the mower in wet grass. Mow only in daylight or in good artificial light.
- Mow across the face of slopes; never up and down. Use extreme caution when changing direction on slopes. Do not mow excessively steep slopes. Wear skid resistant shoes on slopes.
- Always wear safety glasses or eye shields during operation to protect your eyes from foreign objects that may be thrown from the mower. Wearing of hearing protection, protective gloves, and a safety helmet is advisable.
- Keep face, hands, and feet away from the mower housing and cutter blade when the engine is running. The blade can cause injury to hands and feet. Stay behind the handle until the engine stops.
- Use extreme caution when reversing or pulling the mower toward you.
- Since the blade rotates for a few seconds after the control bar is released, stay behind the handle until all moving parts stop.
- After striking a foreign object or if mower vibrates abnormally, stop the engine and remove the wire from the spark plug. Check the mower for damage and make all repairs before using it again. If major repairs are ever needed or if assistance is desired, contact your local Authorized Toro Service Dealer.
- Stop the engine and wait for all moving parts to stop before adjusting the height-of-cut.
- Stop the blade when pushing the mower over dirt or gravel driveways.
- Stop the engine before leaving the operator’s position behind the handle. Disconnect the wire from the spark plug if the mower will be unattended.
- Do not touch the engine while it is running or shortly after it is stopped because it will be hot enough to cause a burn.
- Refuel only when the engine is cool.
- If the mower must be lifted to be transported, turn off the engine and stay behind the handle until all moving parts stop. Disconnect the spark plug wire and allow the engine to cool.

Maintenance and Storage

- Perform all maintenance procedures prescribed in this manual. If major repairs are ever needed or if assistance is desired, contact your Authorized Toro Service Dealer.
- Before the mower is cleaned, inspected, serviced, or adjusted, stop the engine and disconnect the wire from the spark plug. Keep the wire away from the plug to prevent accidental starting.
- To ensure that the mower is in safe operating condition, frequently check and keep all nuts, bolts, and screws tight. Ensure that the blade bolt is tightened to 50 ft–lb (68 N·m).
- When servicing the blade, refer to the Maintaining the Blade section, page 13. for correct installation and servicing procedures.
- To reduce fire hazard, keep the engine free of excessive grease, grass, leaves, and accumulations of dirt.
- Allow the engine to cool before storing the mower in any enclosure. Do not store the mower with gasoline in the fuel tank near any open flame, or where gasoline fumes may be ignited by a spark.
- Do not overspeed the engine by changing the governor settings.
- At the time of manufacture, the mower conformed to the safety standards in effect for rotary mowers. For best performance and continued safety certification of the mower, use genuine Toro replacement parts and accessories. Replacement parts and accessories made by other manufacturers may result in non–conformance with the safety standards, and that could be dangerous.
- For storage instructions, refer to the Storage section on page 17.

Safety and Instruction Decals



Safety decals and instructions are easily visible to the operator and are located near any area of potential danger. Replace any decal that is damaged or lost.



ON MOWER HOUSING (Part No. 43–8480)

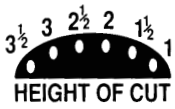

ON REAR HEIGHT ADJUSTER (Part No. 92–2914 Right) (Part No. 92–2915 Left)



ON MOWER HOUSING (Part No. 93–0248)



ON MOWER HOUSING (Part No. 99–6018)

Assembly

IMPORTANT: Be extremely careful when unpacking and handling the mower and upper handle so that you do not pull, crimp, or in any way damage the cables.

Unpacking the Mower

1. Open the box from the top.
2. Remove the lower handle from the box (models 20023, 20025, 20027, and 20061 only).
3. Remove the fillers from the box, allowing the upper handle to rest on the top of the mower.
4. Remove the mower from the box.
5. Lay the upper handle on the ground behind the mower with the handle label facing up and the control cables routed between the handle mounting brackets (Fig. 1).

Assembling the Handle

Models 20023, 20025, 20027, and 20061

1. Squeeze the lower handle section ends together, position the holes in the handles over the pins on the handle brackets, and release the handle (Fig. 1).

IMPORTANT: The cables must be routed inside of the lower handle and the starter rope outside the handle.

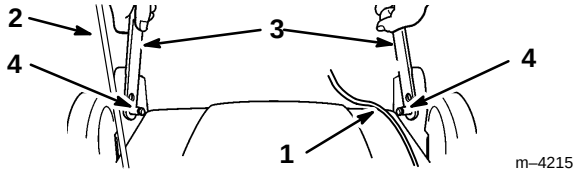

Figure 1

1. Cable
2. Starter rope
3. Lower handle section
4. Pins

All Models

1. Remove the four handle bolts and knobs that are installed in the lower handle (two bolts will have flat caps and two will be contoured to fit the handle).
2. Swing the lower handle back and the support brackets up, aligning the brackets with the holes in the handle (Fig. 2).
3. Secure the handle to the support brackets with the two flat handle bolts and two knobs, using the height adjustment holes on the brackets that best suit your height requirements (Fig. 2)

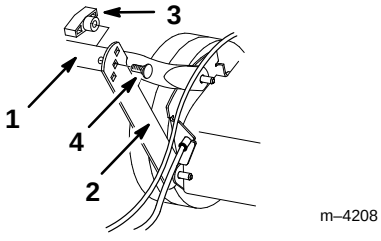

Figure 2

1. Lower handle
2. Support bracket
3. Knob
4. Flat handle bolt

Note: Use care to prevent pinching or stretching the cables.

4. Slide the upper handle section ends over the lower handle so that the sections nest together (Fig. 3)
5. Ensure that the cables are routed below/behind the lower handle as illustrated in Figure 3.
6. Secure the upper handle to the lower handle using two contoured handle bolts and two knobs (Fig. 3).

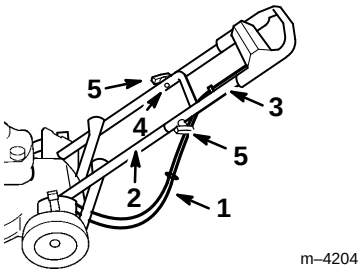

Figure 3

1. Cables
2. Lower handle
3. Upper handle
4. Contoured handle bolt (only one shown)
5. Knobs

Before Starting

Oil

Initially, the crankcase must be filled with 20 ounces (0.6 liters) of SAE 30 oil; 10W-30 oil may be substituted if SAE 30 is not available. Use any high quality detergent oil having the American Petroleum Institute (API) "service classification"—SF, SG, SH or SJ.

Before each use, ensure that the oil level is between the FULL and ADD marks on the dipstick (Fig. 4). Add oil if the level is low.

1. Position the mower on a level surface and clean around the dipstick (Fig. 4).
2. Remove the dipstick by rotating the cap counterclockwise 1/4 turn.
3. Wipe the dipstick clean.
4. Insert the dipstick into the filler neck and rotate the cap clockwise 1/4 turn.
5. Remove the dipstick and check the level of the oil on the side of the dipstick with the FULL and ADD marks (Fig. 4).

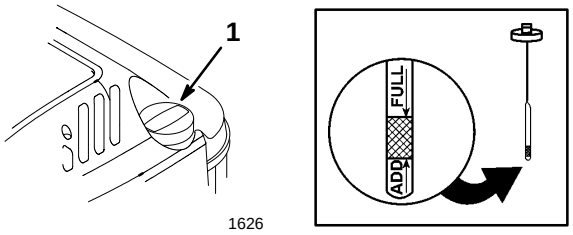

Figure 4

1. Dipstick

6. If the level is low, add enough oil to raise the level to the FULL mark on the dipstick.

IMPORTANT: Do not fill above the FULL mark because the engine could be damaged when started. Pour the oil slowly.

Gasoline

DANGER

POTENTIAL HAZARD

- **In certain conditions gasoline is extremely flammable and highly explosive.**

WHAT CAN HAPPEN

- **A fire or explosion from gasoline can burn you and others and cause property damage.**

HOW TO AVOID THE HAZARD

- **Use a funnel and fill the fuel tank outdoors, in an open area, when the engine is cold. Wipe up any gasoline that spills.**
- **Do not fill the fuel tank completely full. Add gasoline to the fuel tank until the level is 1/4" to 1/2" (6 mm to 13 mm) below the bottom of the filler neck. This empty space in the tank allows gasoline to expand.**
- **Never smoke when handling gasoline, and stay away from an open flame or where gasoline fumes may be ignited by a spark.**
- **Store gasoline in an approved container and keep it out of the reach of children.**
- **Never buy more than a 30-day supply of gasoline.**

DANGER

POTENTIAL HAZARD

- **When fueling, under certain circumstances, a static charge can develop, igniting the gasoline.**

WHAT CAN HAPPEN

- **A fire or explosion from gasoline can burn you and others and cause property damage.**

HOW TO AVOID THE HAZARD

- **Always place gasoline containers on the ground away from your vehicle before filling.**
- **Do not fill gasoline containers inside a vehicle or on a truck or trailer bed because interior carpets or plastic truck bed liners may insulate the container and slow the loss of any static charge.**
- **When practical, remove gas–powered equipment from the truck or trailer and refuel the equipment with its wheels on the ground.**
- **If this is not possible, then refuel such equipment on a truck or trailer from a portable container, rather than from a gasoline dispenser nozzle.**
- **If a gasoline dispenser nozzle must be used, keep the nozzle in contact with the rim of the fuel tank or container opening at all times until fueling is complete.**

Do not use gasoline that has been stored from one season to the next. Use fresh, clean, **unleaded** regular grade gasoline. Unleaded gasoline burns cleaner, extends engine life, and promotes good starting. Leaded gasoline can be used if unleaded is not available.

Toro also recommends that Toro Stabilizer/Conditioner be used regularly during operation and storage. Toro Stabilizer/Conditioner cleans the engine during operation and prevents gum-like varnish deposits from forming during periods of storage.

1. Pull the wire off of the spark plug (Fig. 5).

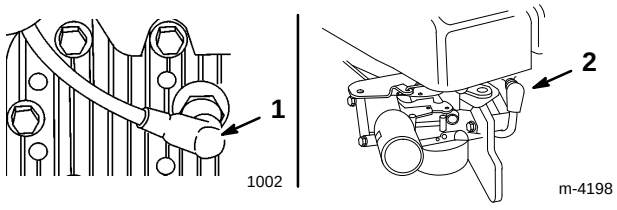

Figure 5

1. Spark plug wire (Models 20022, 20023, 20025, 20029, 20061)
2. Spark plug wire (Model 20027)

2. Clean around the fuel tank cap and remove the cap from the tank (Fig. 6).

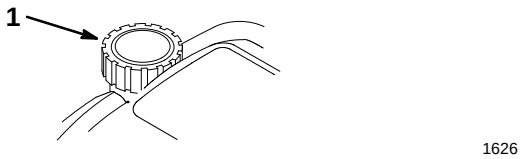

Figure 6

1. Fuel tank cap

3. Using unleaded gasoline, fill the fuel tank to within 1/4" to 1/2" (6 to 13 mm) from top of tank, not into filler neck.

IMPORTANT: Do not fill the tank more than 1/4" from the top of the tank because the gasoline must have room to expand.

4. Install the fuel tank cap and wipe up any spilled fuel.

IMPORTANT: Do not mix oil with the gasoline. Never use methanol, gasoline containing methanol, gasohol containing more than 10% ethanol, or white gas because the fuel system could be damaged.

Do not use fuel additives other than those manufactured for fuel stabilization during storage, such as Toro Stabilizer/Conditioner. Toro Stabilizer/Conditioner is a petroleum distillate based product. Toro does not recommend stabilizers with an alcohol base such as ethanol, methanol, or isopropyl. Do not use additives to enhance the power or performance of the engine.

5. Connect the spark plug wire (Fig. 5).

Operation

Starting the Engine

1. Push the primer three times (five times if you have model 20061 or the temperature is 13°C/55°F or below), waiting 2 seconds between each push (Fig. 7).

IMPORTANT: Do not use the primer to restart a warm engine.

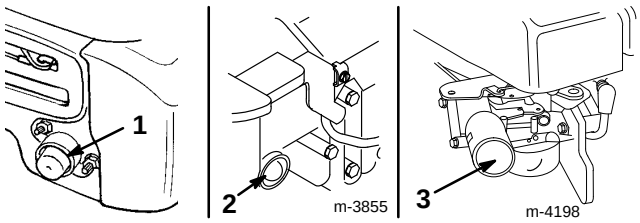

Figure 7

1. Primer (Model 20061)
2. Primer (Models 20022, 20023, 20025, and 20029)
3. Primer (Model 20027)

2. Hold the blade control bail against the upper handle (Fig. 8).

3. Pull the starter handle lightly until resistance is felt, then pull it sharply (Fig. 8). Allow the rope return to the handle slowly.

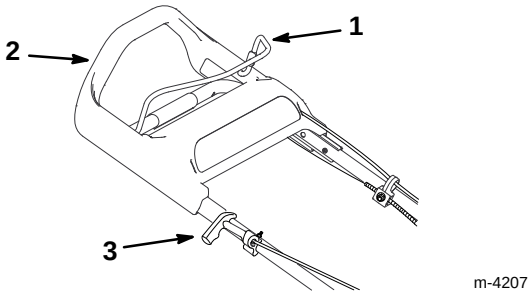

Figure 8

1. Blade control bail
2. Upper handle
3. Starter handle

Note: If the engine fails to start after three (3) pulls, repeat steps 1–3.

Stopping the Engine

Release the blade control bail. Both the engine and blade will stop. See your dealer immediately if they do not.

Self–propel Drive

To operate the self-propel drive, simply walk forward with your hands on the upper handle. As you move forward, the upper handle will slide toward the mower, activating the self–propel drive. The faster you walk, the farther the handle will slide and the faster the mower will propel (Fig. 9).

Note: The mower propels at the maximum speed when the upper handle is pushed as far forward as possible.

To slow down or stop, simply slow your walking speed or stop (Fig. 9). If, when backing up after self–propelling, the mower does not roll backward freely, nudge the mower forward about an inch without engaging the self–propel drive, then pull the mower backward.

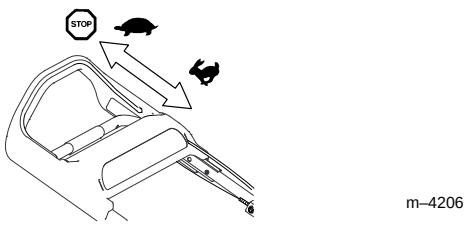

Figure 9

Adjusting the Cutting Height

Each wheel is adjusted individually with a wheel height adjustment lever. Cutting heights are 1, 1-1/2, 2, 2-1/2, 3 and 3-1/2 inches (25, 38, 51, 64, 74 and 86 mm).

DANGER

POTENTIAL HAZARD
- **Adjusting the height-of-cut levers could bring your hands into contact with the moving blade.**

WHAT CAN HAPPEN
- **Contact with a rotating blade can cause serious injury.**

HOW TO AVOID THE HAZARD
- **Stop the engine and wait for all movement to stop before adjusting the cutting height.**
- **Do not put your fingers under the mower housing when adjusting the height-of-cut.**

1. To change the cutting height, pull the adjusting lever toward the wheel and move it to the desired position (Fig. 10).

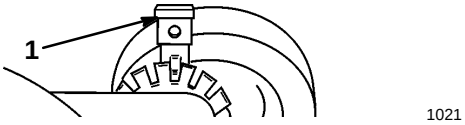

Figure 10

1. Wheel height adjustment lever

2. Release the height adjust lever and seat it securely in the notch.

Note: Set all four (4) wheels at the same height.

Operating Tips

General Tips

- Review the safety instructions and read this manual carefully before operating the mower.
- Clear the area of sticks, stones, wire, branches, and other debris which could be picked up or hit by the blade and become thrown objects.
- Keep everyone, especially children and pets, away from the area of operation.
- Avoid striking trees, walls, curbs, or other solid objects. Never deliberately mow over any object.
- If an object is struck, or the mower starts to vibrate, immediately stop the engine, disconnect the spark plug wire, and examine the mower for damage.

- Maintain a **sharp blade** throughout the cutting season. Periodically file down nicks on blade.
- Replace the blade when necessary with an original Toro replacement blade.
- Clean clippings or leaves from the underside of the mower deck after each mowing.
- Keep the engine in good running condition.
- Clean the air filter frequently. Mulching stirs up more clippings and dust which clogs the air filter and reduces engine performance.

Cutting Grass

- In the heat of Summer, cut the grass at the 2, 2.5, or 3 inch height-of-cut settings. Only about 1/3 of the grass blade should be cut off. Cut below the 2 inch setting only if the grass is sparse or it is Autumn when the grass grows slowly.
- When cutting grass over six inches tall, mow using the highest height-of-cut setting and a slower walking speed; then mow again at a lower setting for best lawn appearance. If the grass is too long, the mower may plug and cause the engine to stall.
- Alternate the mowing direction. This helps disperse clippings over the lawn for even fertilization.
- Only mow dry grass or leaves. Wet grass and leaves tend to clump on the yard and may cause the mower to plug or the engine to stall. They may also be slippery to walk on and could cause you to slip and fall.

⚠ WARNING

POTENTIAL HAZARD
- **Wet grass or leaves can cause you to slip and contact the blade.**

WHAT CAN HAPPEN
- **Blade contact can seriously injure you.**

HOW TO AVOID THE HAZARD
- **Mow only in dry conditions.**

If the finished lawn appearance is unsatisfactory, try one or more of the following:

- Sharpen the blade.
- Walk at a slower pace while mowing.
- Raise the height-of-cut setting on your mower.
- Cut grass more frequently.
- Overlap cutting swaths instead of cutting a full swath with each pass.
- Set the height-of-cut on the front wheels one notch lower than the rear wheels. (example: set the front wheels at the 2 inch setting and the rear wheels at the 2.5 inch setting)

Cutting Leaves

- When cutting is complete, ensure that 50% of the grass blades show through the cut leaf cover. This may require one or more passes over the leaves.
- Position all wheels at the same height-of-cut setting.
- Walk at a slower mowing speed if the leaves are not being cut up finely enough to be hidden in the grass.
- If you cut up a lot of oak leaves, add lime to your grass in the spring. Lime reduces the acidity of the leaves.

Changing the Handle Height

The handle has three height positions (Fig. 11). Select a handle height position that is most comfortable for you.

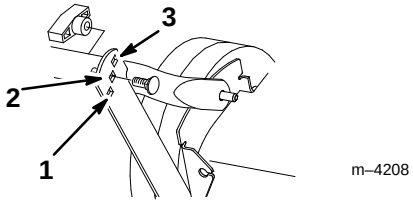

Figure 11

1. Low setting
2. Middle setting
3. High setting

1. Remove the handle bolts and knobs from the lower handle and the support brackets (Fig. 11).

2. Secure the handle to the support bracket with two handle bolt installed from the outside and two knobs, using the height adjustment holes on the brackets that best suit your height requirements (Fig. 11)

Maintenance

Recommended Maintenance Schedule

Service Item	Service Operation	After every use	5 Hours	25 Hours	50 Hours	100 Hours
Housing	Clean built-up grass clippings and dirt.	X				
Fasteners	Check blade and engine mounting fasteners. Keep all fasteners tight to keep the mower in safe working condition.		X			
Air Filter	Replace each mowing season or every 25 hours. **Replace more frequently if operating conditions are dusty.**			X		
Engine Oil	Drain and refill engine crankcase with fresh oil after first **5** hours of operation. Thereafter, change every **50** hours or yearly.				X	
Blade	Sharpen or replace; maintain more frequently if edge is dulled quickly in rough or sandy conditions.				X	
Blade Brake	Check stopping time every 50 hours or at the start of each mowing season. Blade must stop within 3 seconds of releasing bail; if not, see your Authorized Toro Service Dealer for repair.				X	
Lubrication	Grease rear height adjustor brackets (self-propelled models).				X	
Fuel System	Check for leakage and/or deterioration of fuel hose. Replace if necessary.				X	
Belt Cover	Remove and clean grass, clippings and debris from under cover.				X	
Spark Plug	Inspect and clean. Replace if necessary.					X
Cooling System	Clean grass, clippings, debris or dirt that may clog engine air cooling fins and starter. Clean more frequently if operated under dirty or high chaff conditions.					X

CAUTION

POTENTIAL HAZARD
- **If you leave the wire on the spark plug, someone could start the engine.**

WHAT CAN HAPPEN
- **Accidental starting of engine could seriously injure you or other bystanders.**

HOW TO AVOID THE HAZARD
- **Pull the wire off of the spark plug before you do any maintenance. Also push wire aside so it does not accidentally contact spark plug.**

Air Filter

Replace the air filter once every season or every 25 hours; replace it more frequently under dusty conditions.

IMPORTANT: Do not operate the engine without the air filter element; extreme engine damage will occur.

Models 20022, 20023, 20025, and 20029

1. Stop the engine and pull the wire off of the spark plug (Fig. 15).
2. Loosen the screw securing the air cleaner cover (Fig. 12).
3. Tilt the cover down and clean it thoroughly (Fig. 12).

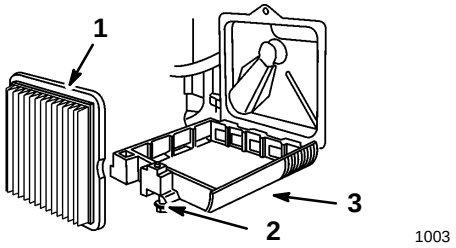

Figure 12

1. Air filter
2. Screw
3. Cover

4. Remove the paper air filter and discard it (Fig. 12).

IMPORTANT: Do not try to clean a paper filter.

5. Insert a new paper air cleaner filter (Fig. 12).
6. Install the air cleaner cover and secure it with the screw.

Model 20027 and 20061

1. Stop the engine and pull the wire off of the spark plug (Fig. 15).
2. Remove the nut or screws securing the air cleaner cover (depending on your model, see Figure 13).
3. Remove the cover and clean it thoroughly (Fig. 13).

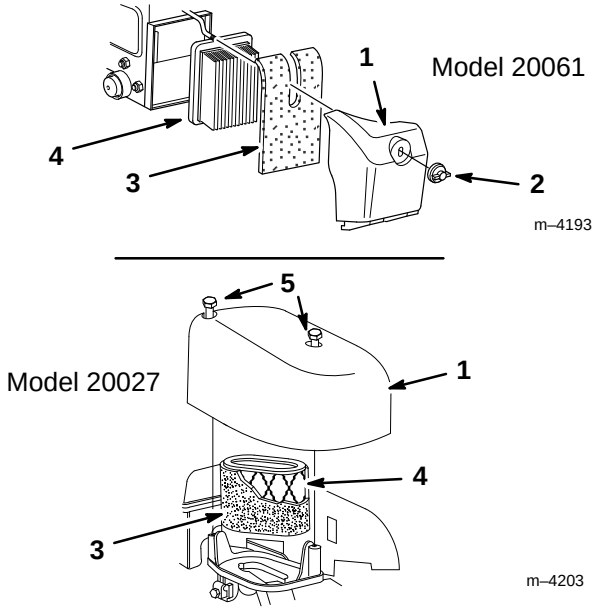

Figure 13

1. Cover
2. Nut
3. Foam pre–cleaner
4. Air filter
5. Screws

4. Remove the foam pre–cleaner and wash it with a mild detergent and water, then blot it dry (Fig. 13).
5. Model 20061 only–Saturate the pre-cleaner with oil, then squeeze it (do not twist) to remove excess oil.
6. Remove the paper air filter and discard it (Fig. 13).

IMPORTANT: Do not try to clean a paper filter.

7. Install the foam pre-cleaner either into the cover or on the new paper air filter, depending on your model (Fig. 13).
8. Install the new air cleaner filter (Fig. 13).
9. Install the cover and secure it (Fig. 13).

Draining Gasoline

1. Stop the engine and wait for it to cool.

IMPORTANT: Drain gasoline from a cold engine only.

2. Pull the wire off of the spark plug (Fig. 15).
3. Remove the cap from the fuel tank and use a pump-type syphon to drain the fuel into a clean gas can.

Note: This is the only procedure recommended for draining fuel.

Change Engine Oil

Change the engine oil after the first **5** hours of operation and after **50** hours of operation or yearly thereafter. Change oil while the engine is warm.

WARNING

POTENTIAL HAZARD
- **Gasoline is extremely flammable, highly explosive and under certain conditions can cause personal injury or property damage.**

WHAT CAN HAPPEN
- **Tipping the mower may cause fuel leakage from the carburetor or fuel tank.**

HOW TO AVOID THE HAZARD
- **Avoid fuel spills by running the engine dry or removing gas with a hand pump; never siphon.**

1. Drain the gasoline from the fuel tank. Refer to the Draining Gasoline section, page 11.
2. Start the engine and let it run until it runs out of fuel.
3. Pull the wire off of the spark plug (Fig. 15).
4. Remove the dipstick and tip the mower on the left side, draining the oil out the oil fill tube into an appropriate container (Fig. 14).

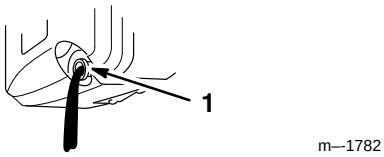

Figure 14

1. Oil fill tube

5. Recycle the oil as per local codes.
6. Turn the mower upright.
7. Fill the crankcase to the FULL line on the dipstick with fresh oil. Refer to the Oil section, page 6, for specifications.
8. Check the oil level and install the dipstick.
9. Wipe up any spilled oil.

Spark Plug

Use a Champion RJ19LM spark plug or equivalent. The correct air gap is 0.030” (0.76 mm). Remove the plug after every 25 operating hours and check its condition.

1. Stop the engine and pull the wire off the spark plug (Fig. 15).

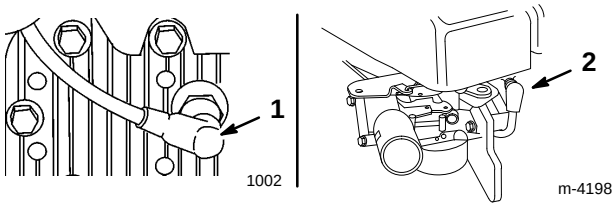

Figure 15

1. Spark plug wire (Models 20022, 20023, 20025, 20029, and 20061)
2. Spark plug wire (Model 20027)

2. Clean around the spark plug and remove it from the cylinder head.

IMPORTANT: Replace a cracked, fouled, or dirty spark plug. Do not clean the electrodes because engine damage could result from grit entering the cylinder.

3. Set the gap on the new plug to 0.030” (0.76 mm) (Fig. 16).

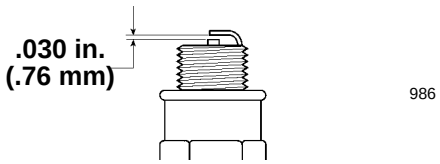

Figure 16

4. Install the spark plug and gasket seal. Tighten the plug to 15 ft-lb (20 N·m).
5. Connect the spark plug wire (Fig. 15).

Adjusting the Self-propel Cable

If the top speed begins to slow on the mower, adjust the self–propel cable.

1. With the engine turned off, remove the bolt securing the belt cover (Fig. 28) and remove the cover.

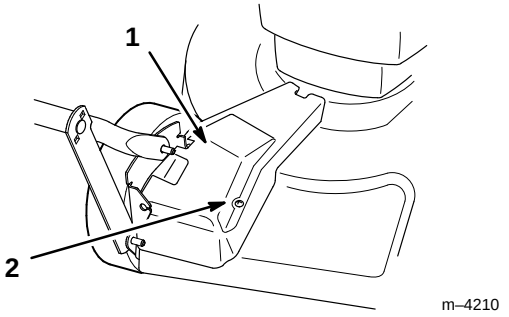

Figure 17

1. Belt cover
2. Bolt

2. Loosen the cable support nut (Fig. 18).

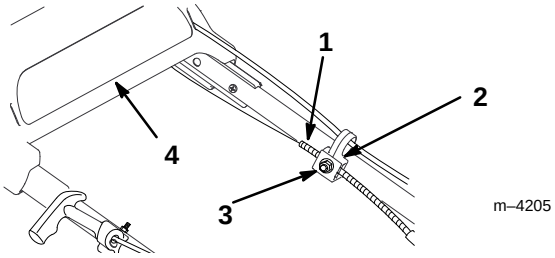

Figure 18

1. Cable jacket
2. Cable support
3. Nut
4. Upper handle

3. Push the drive bracket down until it contacts the mower, then hold it in place (Fig. 19).

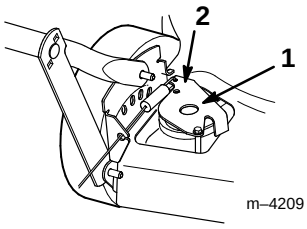

Figure 19

1. Drive bracket
2. Push here

4. With the upper handle pushed back as far as possible and while holding the drive bracket down, pull the cable jacket down (toward the mower) until all slack is removed from the cable (Fig. 18).

5. Tighten the nut on the cable support (Fig. 18).

6. Release the drive bracket and install the belt cover.

Maintaining the Blade

A straight, sharp blade provides maximum cutting performance. Regularly inspect and sharpen the blade.

WARNING

POTENTIAL HAZARD
- **The blade is sharp.**

WHAT CAN HAPPEN
- **Contact with a sharp blade can cause serious personal injury.**

HOW TO AVOID THE HAZARD
- **Wear gloves or wrap the sharp edges of the blade with a rag.**

1. Stop the engine and pull the wire off of the spark plug (Fig. 15).

WARNING

POTENTIAL HAZARD
- **Gasoline is extremely flammable, highly explosive and under certain conditions can cause personal injury or property damage.**

WHAT CAN HAPPEN
- **Tipping the mower may cause fuel leakage from the carburetor or fuel tank.**

HOW TO AVOID THE HAZARD
- **Avoid fuel spills by running the engine dry or removing gas with a hand pump; never siphon.**

2. Drain the gasoline from the fuel tank. Refer to the Draining Gasoline section, page 11.

3. Tip the mower on its left side (Fig. 20). Avoid rotating the blade because starting problems may result.

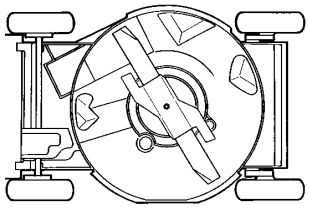

Figure 20

Inspecting the Blade

1. Examine the blade for sharpness and wear, especially where flat and curved parts meet (Fig. 21A).

2. Complete one of the following:

A. If a slot or wear is noticed, (Fig. 21B & C), replace the blade. Refer to the Removing and Installing the Blade sections.

B. If the blade is nicked or dull, sharpen it. Refer to the Removing, Sharpening, Balancing, and Installing the Blade sections.

C. If there are no signs of wear of dullness, return the mower to the upright position and replace the spark plug wire (Fig. 15).

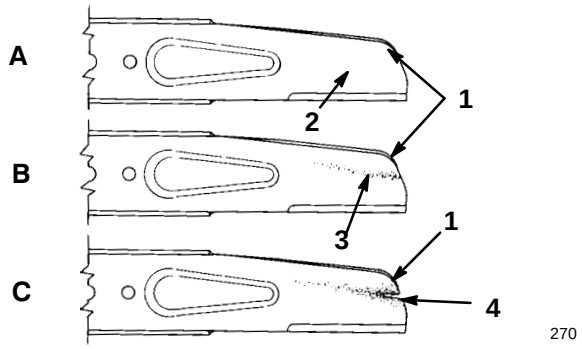

Figure 21

1. Sail
2. Flat part of blade
3. Wear
4. Slot formed

DANGER

POTENTIAL HAZARD

- **A worn or damaged blade could break and a piece of the blade could be thrown into operator's or bystander's area.**

WHAT CAN HAPPEN

- **A thrown piece of the blade could cause serious personal injury or death to the operator or bystanders.**

HOW TO AVOID THE HAZARD

- **Inspect the blade periodically for wear or damage.**
- **Replace a worn or damaged blade.**

Removing the Blade

1. Grasp the end of the blade using a rag or thickly padded glove.

2. Remove the blade bolt, lockwasher, blade accelerator and blade (Fig. 22).

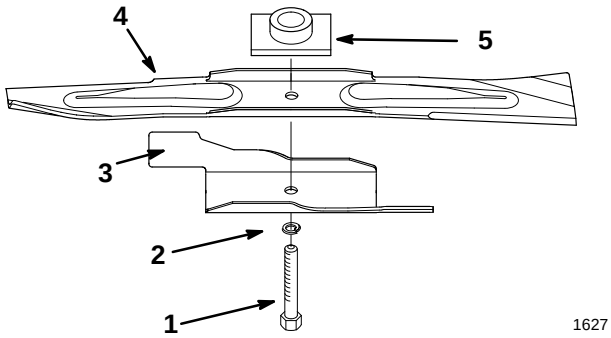

Figure 22

1. Blade bolt
2. Lock washer
3. Accelerator
4. Blade
5. Blade driver

Sharpening the Blade

Using a file, sharpen top side of the blade and maintain the original cutting angle (Fig. 23).



Figure 23

1. Sharpen at this angle only

Note: The blade will remain balanced if same amount of material is removed from both cutting edges.

Balancing the Blade

1. Check the balance of the blade by placing the center hole of the blade over a nail or screwdriver shank clamped horizontally in a vise (Fig. 24).

Note: You can also check the balance using a commercially manufactured, blade balancer.

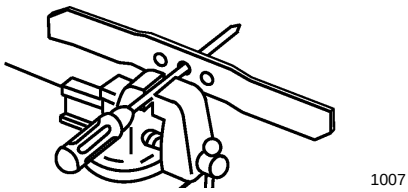

Figure 24

2. If either end of the blade rotates downward, file that end (not the cutting edge or the end near the cutting edge). The blade is properly balanced when neither end drops.

Installing the Blade

1. Position the blade onto the spindle and blade driver, with the curved blade tips pointing toward the mower and the blade driver nesting in the recess of the blade (Fig. 22).
2. Install the accelerator, lock washer, and blade bolt (Fig. 22).
3. Tighten the blade bolt to 50 ft-lb (68 N·m).

WARNING

POTENTIAL HAZARD

- **Operating the mower without the accelerator in place could cause the blade to flex, bend, or break.**

WHAT CAN HAPPEN

- **A broken blade could cause serious injury or death to the operator or bystanders.**

HOW TO AVOID THE HAZARD

- **Do not operate the mower without the accelerator.**

Lubricating the Self–propel Drive

1. Wipe the grease fittings on the rear height-of-cut adjustors (Fig. 25) with a clean rag.

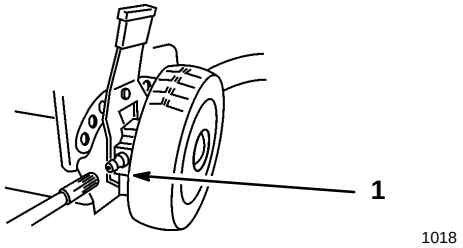

1018

Figure 25

1. Grease fitting

2. Install a grease gun onto each fitting in turn and gently apply one or two pumps of #2 multi-purpose lithium grease to each.

IMPORTANT: Excess grease may damage seals and prevent proper wheel clutch operation.

Cleaning the Underside of the Mower Housing

To ensure best performance, keep the underside of the mower housing clean. Be especially careful to keep the kickers free of debris (Fig. 26).

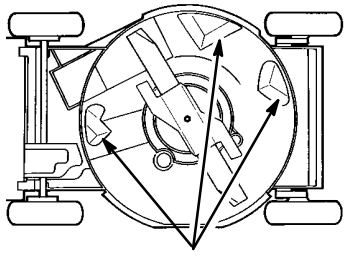

757

Figure 26

1. Kickers

Washing Method

1. Position the mower on a flat, concrete or asphalt surface near a garden hose.
2. Start the engine.
3. Hold the running garden hose at handle level and direct the water to flow on the ground just in front of the right rear tire (Fig. 27).

   The blade will draw in water and wash out clippings. Let the water run until you no longer see clippings being washed out from under housing.

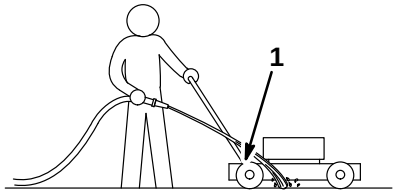

1093

Figure 27

1. Rear right wheel

4. Stop the engine.
5. Turn off the garden hose.
6. Start the mower and let it run for a few minutes to dry out the moisture on the mower and its components.
7. While the engine is running, engage and disengage the traction drive several times to dry it out.

Scraping Method

If washing does not remove all debris from under the mower, tip it and scrape it clean.

1. Pull the wire off of the spark plug (Fig. 15).
2. Drain the gasoline from the fuel tank. Refer to the Draining Gasoline section, page 11.

WARNING

POTENTIAL HAZARD
- **Gasoline is extremely flammable, highly explosive and under certain conditions can cause personal injury or property damage.**

WHAT CAN HAPPEN
- **Tipping the mower may cause fuel leakage from the carburetor or fuel tank.**

HOW TO AVOID THE HAZARD
- **Avoid fuel spills by running the engine dry or removing gas with a hand pump; never siphon.**

3. Tip the mower on its left side (Fig. 26).
4. Remove dirt and grass clippings with a hardwood scraper. Avoid burrs and sharp edges.

IMPORTANT: Move the blade as little as possible to avoid future starting problems.

5. Turn the mower upright.
6. Refill the gas tank.
7. Connect the spark plug wire (Fig. 15).

Cleaning Under the Belt Cover

Keep area under belt cover free of debris.

1. With the engine turned off, remove the bolt securing the belt cover (Fig. 28) to the mower housing.

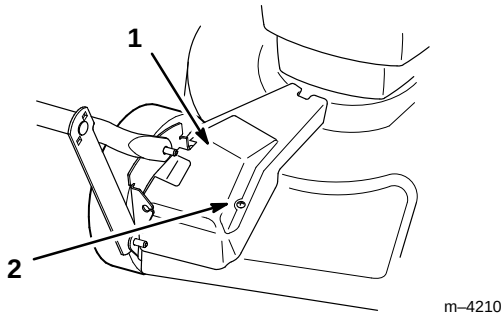

Figure 28

1. Belt cover
2. Bolt

2. Lift off the cover and brush out all debris from the belt area.
3. Install the belt cover.

Troubleshooting

Your mower was designed and built for trouble-free operation. Check the following components and items carefully. If a problem continues, see your Authorized Toro Service Dealer.

PROBLEM	CORRECTIVE ACTION
Engine will not start	1. Fill fuel tank with fresh gasoline 2. Move throttle lever to the FAST position 3. Press primer three (3) times 4. Spark plug • Connect spark plug wire • Clean spark plug, check spark plug gap, replace if damaged
Engine starts hard or loses power	1. Drain and refill fuel tank with fresh gasoline 2. Replace air filter element 3. Clean underside of mower deck 4. Clean spark plug, check spark plug gap, replace if damaged 5. Check engine oil

PROBLEM	CORRECTIVE ACTION
Engine runs rough	1. Connect spark plug wire 2. Clean spark plug, check spark plug gap, replace if damaged 3. Move throttle lever from SLOW to FAST position 4. Replace air filter element
Mower or engine vibrates excessively	1. Balance blade. Or if blade is bent, straighten it. 2. Tighten blade mounting bolt 3. Clean underside of mower deck 4. Tighten engine mounting bolts
Uneven cutting pattern	1. Place all four (4) wheels at same height 2. Sharpen and balance blade 3. Change mowing pattern 4. Clean underside of mower deck
Discharge chute plugs	1. Move throttle lever from SLOW to FAST position 2. Raise cutting height 3. Slow down 4. Allow grass to dry before mowing 5. Clean underside of mower deck
Will not self-propel	1. Adjust self-propelled cable 2. Clean debris from under belt cover.

Storage

To prepare the lawn mower for off-season storage, perform the recommended maintenance procedures. Refer to the Maintenance section, page 10.

Store the mower in a cool, clean, dry place. Cover the mower to keep it clean and protected.

Fuel

WARNING

POTENTIAL HAZARD
- **Gasoline can vaporize if stored over long periods of time.**

WHAT CAN HAPPEN
- **Vaporized fuel can explode if it comes into contact with open flame.**

HOW TO AVOID THE HAZARD
- **Do not store gasoline (fuel) over long periods of time.**
- **Do not store mower with fuel in the tank in an enclosure with an open flame. (Example: a furnace or water heater pilot light.)**
- **Allow the engine to cool before storing in any enclosure.**

We recommend Toro Fuel Conditioner to stabilize fuel for storage. If possible, the last fuel fill of the year should be treated with Toro Fuel Conditioner.

Run the fuel tank empty when mowing the last time prior to storage. The smaller the amount of fuel in the tank, the shorter the time required to run the fuel system dry. Run the mower until engine stops from lack of fuel.

Preparing the Engine

1. While the engine is still warm, drain oil from crankcase. Refer to the Changing Engine Oil section, page 12.
2. Remove the spark plug (Fig. 15).
3. Using an oil can, squirt about one tablespoon of oil through spark plug hole.
4. Slowly rotate the engine several times, using the starter rope, to distribute the oil.
5. Install spark plug but **do not** connect the spark plug wire.

Cleaning the Mower

1. Clean the mower housing. Refer to the Cleaning the Underside of the Mower Housing section, page 15.
2. Clean any dirt and chaff from the cylinder, cylinder head fins, and blower housing. Also remove grass clippings, dirt, and grime from external parts of the engine, shrouding, and top of the mower housing.

General

1. Check the condition of the blade. Refer to the Maintaining the Blade section, page 13.
2. Tighten all nuts, bolts, and screws.
3. Lubricate the wheels. Refer to the Lubricating the Self–Propel Drive section, page 15.
4. Touch up all rusted or chipped paint surfaces. Paint is available from an Authorized Toro Service Dealer.

Folding the Handle

IMPORTANT: Be extremely careful when folding the handle so that you do not pull, crimp, or in any way damage the cables.

IMPORTANT: Do not remove or loosen the knobs securing the the lower handle to the swing bracket. Do not fold the upper handle backwards.

1. Loosen the knobs that secure the upper handle.
2. Carefully swing the upper handle forward until it rests on the engine (Fig. 29).

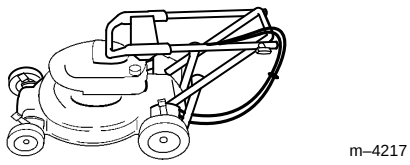

m–4217

Figure 29

Removing From Storage

1. Carefully unfold the upper handle until it nests with the lower handle, then tighten the knobs.

IMPORTANT: Be extremely careful when unfolding the handle so that you do not pull, crimp, or in any way damage the control cables.

2. Check and tighten all fasteners.
3. Remove the spark plug (Fig. 15) and spin the engine rapidly using the starter to blow excess oil from the cylinder.
4. Clean the spark plug or replace it if it is cracked, broken, or the electrodes are worn.
5. Install the spark plug and torque it to 15 ft.-lbs. (20 N·m).
6. Perform the recommended maintenance procedures. Refer to the Maintenance section, page 10.
7. Fill the fuel tank (Fig. 30) with fresh, clean gasoline.

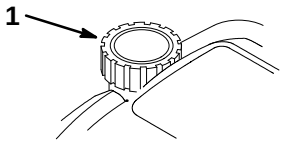

1626

Figure 30

1. Fuel tank cap

8. Check the engine oil level.
9. Connect the spark plug wire (Fig. 15).

Accessories

Accessories may have been shipped with your mower or are available from your Authorized Toro Dealer. For proper installation, follow these instructions.

Rear Grass Catcher

Install Discharge Tunnel

1. Stop the engine and disconnect the spark plug wire (Fig. 15).

2. Remove the knob and side cover clamp (Fig. 31).

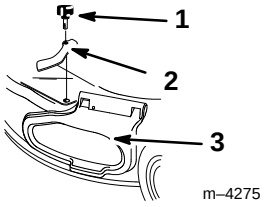

Figure 31

1. Knob
2. Side cover clamp
3. Side opening cover

---

3. Remove and save the three bolts securing the discharge cover to the mower (Fig. 32). Save the cover and bolts for future use.

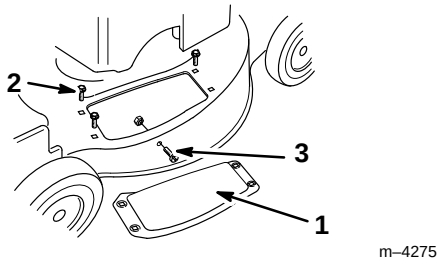

Figure 32

1. Discharge cover
2. Bolt (3)
3. Screw and nut

---

4. Remove the screw and nut from side of the mower (Fig. 32). Save them for future use.

5. Install four grommets supplied with the grass catcher into the four square holes in the mower (Fig. 33).

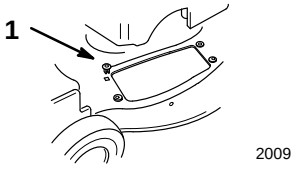

Figure 33

1. Grommet (4)

---

6. Insert the tongue of the discharge tunnel into the mower (Fig. 34).

7. Align the holes in the tunnel with the grommets in the mower (Fig. 34).

8. Ensure that the hole in the tongue aligns with the hole in the side of the mower (Fig. 34).

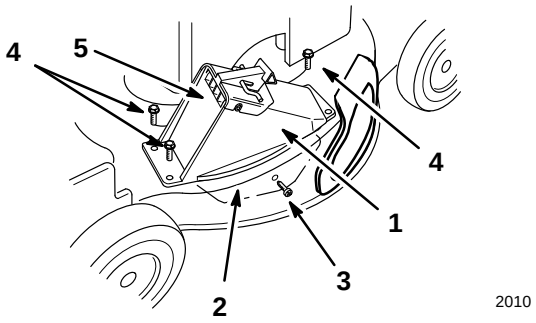

Figure 34

1. Discharge tunnel
2. Tongue
3. Self-tapping screw
4. Bolt (3)
5. Discharge tunnel door

---

9. Install the self-tapping plastite screw supplied with the grass catcher into the side hole and tongue, and partially tighten the screw (Fig. 34).

10. Using three screws supplied with the grass catcher, fasten the discharge tunnel to the mower (Fig. 34).

11. Secure the front, right corner of the discharge tunnel and the side opening cover with the side cover clamp removed previously and the long knob supplied with the grass catcher (Fig. 35)

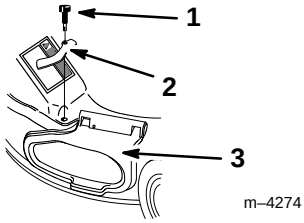

Figure 35

1. Long knob
2. Side cover clamp
3. Side opening cover

DANGER

POTENTIAL HAZARD

- **If the side opening cover is not securely clamped in place, debris could be thrown out of the side opening.**

WHAT CAN HAPPEN

- **Thrown debris can cause serious personal injury or death to the operator or bystanders.**

HOW TO AVOID THE HAZARD

- **Always ensure that either the side opening cover is closed and locked in place by the side cover clamp or that the side discharge chute is securely seated in place before starting the lawn mower.**

12. Tighten all four screws and the long knob.

13. Open and close the tunnel door to ensure that it moves freely (Fig. 34).

Installing the Grass Bag

1. Stop the engine and wait for all moving parts to stop.

2. Ensure that the discharge door handle is fully forward (door closed) (Fig. 36).

DANGER

POTENTIAL HAZARD
- **Thrown objects may result if the discharge door does not close completely.**

WHAT CAN HAPPEN
- **Thrown objects can cause serious personal injury or death.**

HOW TO AVOID THE HAZARD
- **If the discharge door cannot be closed because grass clippings clog the discharge area, stop the engine and gently move the discharge door handle back and forth until the door can be closed completely. If door still cannot be closed, remove the obstruction with a stick; not your hand.**

3. Fit the bag door opening over the discharge tunnel opening as shown in Figure 36.

The bag door latches should straddle the door handle, and the bag rod hook should be in front of the handle bracket.

4. Set the rear of the bag frame onto the lower handle.

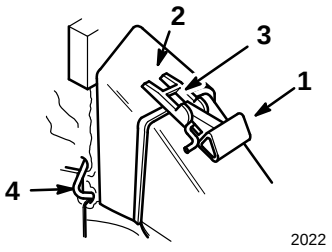

Figure 36

1. Handle fully forward
2. Bag door
3. Bag door latch
4. Bag rod hook in front of handle bracket

5. Pull the handle rearward until the handle latch locks in the notch in the bag door latch (Fig. 37).

The discharge door in the mower housing is now open and the bag is locked into position. The latch should seat in bottom of the notch.

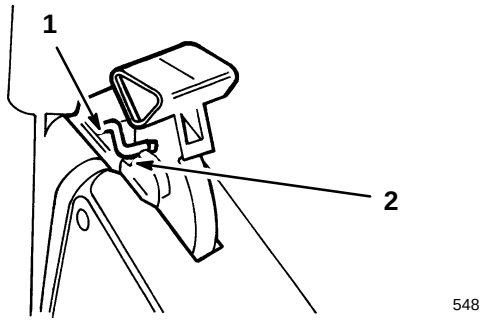

Figure 37

1. Handle latch locked in bag notch
2. Notch in bag door latch

DANGER

POTENTIAL HAZARD
- **Grass clippings and other objects can be thrown from an open discharge tunnel.**

WHAT CAN HAPPEN
- **Objects thrown with enough force could cause serious personal injury or death to the operator or bystander.**

HOW TO AVOID THE HAZARD
- **Never open the door on the discharge tunnel when the engine is running.**

DANGER

POTENTIAL HAZARD
- **A worn grass bag could allow small stones and other similar debris to be thrown in operator's or bystander's direction.**

WHAT CAN HAPPEN
- **Thrown objects can cause serious personal injury or death to the operator or bystanders.**

HOW TO AVOID THE HAZARD
- **Check the grass bag frequently. If it is damaged, install a new genuine Toro replacement bag that has this or a similar warning.**

Emptying the Grass Bag

1. Stop the engine and wait for all moving parts to stop.
2. Lift the door latch until it clears the bag notch and move the discharge door handle forward (Fig. 36).
3. Grasp the bag frame handle and the rear of the grass bag and lift the bag off of the mower.
4. Gradually tip bag forward to empty clippings.

Side Discharge Chute

Installing the Side Discharge Chute

1. Stop the engine and disconnect the spark plug wire.
2. Remove the knob and side cover clamp, then replace the knob in the hole and save the clamp for future use (Fig. 31).
3. Lift up on the side opening cover (Fig. 31).
4. Slide the chute over the opening with the slots in the chute lined up with the tabs under the cover (Fig. 38).

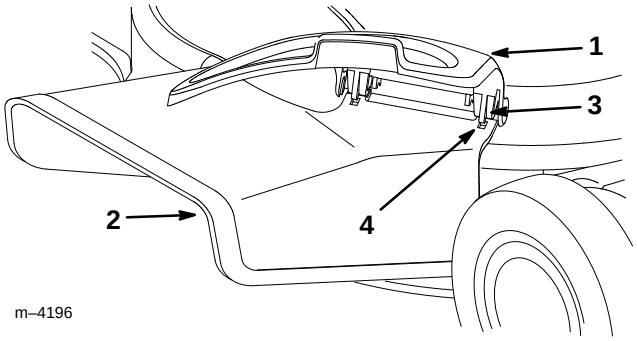

Figure 38

1. Side opening cover
2. Side discharge chute
3. Tab
4. Slot

5. Close the cover.

Removing the Side Discharge Chute

1. Stop the engine and disconnect the spark plug wire.
2. Open the side opening cover and remove the side discharge chute (Fig. 38).
3. Close the cover.
4. Remove the knob, then install the side cover clamp and the knob, securing the side opening cover (Fig. 31 and 39).

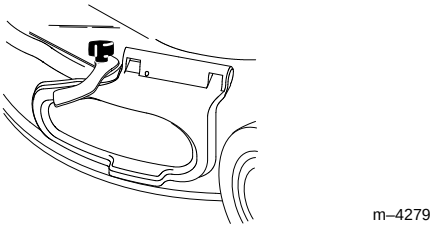

Figure 39

DANGER

POTENTIAL HAZARD

- **If the side opening cover is not securely clamped in place, debris could be thrown out of the side opening.**

WHAT CAN HAPPEN

- **Thrown debris can cause serious personal injury or death to the operator or bystanders.**

HOW TO AVOID THE HAZARD

- **Always ensure that either the side opening cover is closed and locked in place by the side cover clamp or that the side discharge chute is securely seated in place before starting the lawn mower.**

Gas, Cordless, Electric, and 21" Commercial Duty Walk Mowers

THE TORO PERFORMANCE WARRANTY

A Full Warranty
(Limited Warranty for Commercial Use)

What Is Covered By This Express Warranty?

From the date of purchase, for the period listed below, the Toro Company promises to repair any Toro Product used for normal residential purposes* if defective in materials or workmanship or if it stops functioning due to the failure of a component. The following time periods apply from the date of purchase:

- Super Recycler® Walk Mowers . 5 year full warranty
- VacuPower™ Walk Mowers . . . . 5 year full warranty
- All Others . . . . . 2 year full warranty

The cost of parts and labor is included, but the customer pays the transportation costs.

What Products Are Covered By This Warranty?

This warranty applies to all gas, cordless, and electric consumer walk power mowers.

How About Commercial Use?

Toro Walk Power Mowers used for commercial, institutional or rental use are warranted against defects in material or workmanship. Components failing due to normal wear are not covered by this warranty. The following time periods apply from the date of purchase:

Products	Warranty Period	
	Engine	Entire Unit
• 21" Commercial Duty Walk Mowers	2 year limited	1 year limited
• All Others	45 day limited	45 day limited

How Do You Get Warranty Service?

Should you feel your Toro Product requires warranty service, contact the dealer who sold you the product or any Authorized Toro Service Dealer or Toro Master Service Dealer. The Yellow Pages of your telephone directory is a good reference source. The dealer will either arrange service at his/her dealership or recommend another Authorized Service Dealer who may be more convenient. You may need proof of purchase (copy of registration card, sales receipt, etc.) for warranty validation.

If for any reason you are dissatisfied with the Service Dealer's analysis of the defect in materials or workmanship or if you need a referral to a Toro Service Dealer, please feel free to contact us at the following address:

Toro Customer Service Department
8111 Lyndale Avenue South
Bloomington, MN 55420−1196
612−888−8801
800−348−2424

What Must You Do To Keep The Warranty In Effect?

You must maintain your Toro Product by following the maintenance procedures described in the operator's manual. Such routine maintenance, whether performed by a dealer or by you, is at your expense.

What Does This Warranty Not Cover? and How Does Your State Law Relate To This Warranty?

There is no other express warranty except for special emission system coverage on some products and the Toro Starting Guarantee on GTS Engines. This express warranty does not cover:

- Cost of regular maintenance service or parts, such as filters, fuel, lubricants, oil changes, spark plugs, blade sharpening, blade worn out, cable/linkage adjustments or brake and clutch adjustments.

- Any product or part which has been altered or misused or required replacement or repair due to accidents or lack of proper maintenance.

- Repairs necessary due to improper fuel, contaminants in the fuel system, or failure to properly prepare the fuel system prior to any period of non−use over three months.

- Repairs necessary due to improper battery care, electrical supply irregularities, or failure to properly prepare the mower prior to any period of non−use.

- Pickup and delivery charges.

All repairs covered by this warranty must be performed by an Authorized Toro Service Dealer using Toro approved replacement parts.

Repair by an Authorized Toro Service Dealer is your sole remedy under this warranty.

The Toro Company is not liable for indirect, incidental or consequential damages in connection with the use of the Toro Products covered by this warranty, including any cost or expense of providing substitute equipment or service during reasonable periods of malfunction or non−use pending completion of repairs under this warranty. Some states do not allow exclusions of incidental or consequential damages, so the above exclusion may not apply to you.

This warranty gives you specific legal rights, and you may also have other rights which vary from state to state.

* Normal residential purposes means mowing the lawn on the same lot as your home. Use at more than one location is considered commercial use and the commercial use warranty would apply.

COUNTRIES OTHER THAN THE UNITED STATES OR CANADA

Customers who have purchased Toro products exported from the United States or Canada should contact their Toro Distributor (Dealer) to obtain guarantee policies for your country, province, or state. If for any reason you are dissatisfied with your Distributor's service or have difficulty obtaining guarantee information, contact the Toro importer. If all other remedies fail, you may contact us at The Toro Company.

Rev. 10/19/1998

It is Toro's policy to design and produce high quality products. To ensure customer satisfaction, Toro has extensive warranty coverage on its products. Your Toro GTS Engine powered product has two warranty statements covering it. The Toro Total Coverage Guarantee is our standard warranty statement and is printed on the last page of this manual.

In addition to The Toro Total Coverage Guarantee, we are so confident that the Toro GTS Engine will provide a high level of performance and durability that we are providing a *Starting Guarantee!* Please read the details of this additional warranty coverage printed below.

THE TORO STARTING GUARANTEE

A Two Year Limited Warranty on All GTS−2 Engines

What Must You Do To Keep The Warranty In Effect?

The Toro Company guarantees that your GTS−2 Engine will start on the first or second pull for two years from the date of purchase—if you provide the routine maintenance it requires—or we will fix it. The cost of parts and labor are included, but you must pay transportation costs. This covers GTS−2 engines on Toro rotary mowers.

What Must You Do To Keep The Warranty In Effect?

You must maintain your GTS−2 Engine by following the maintenance schedule detailed in the operator's manual, at your expense. You must record this work in the maintenance chart provided in your owner's manual and keep your proof of purchase.

How Do You Get Service?

If the starting performance of your GTS−2 Engine should diminish to the point where it will not start in one or two pulls by a normal, able−bodied adult, you should follow the procedures below:

1. Contact any Authorized Toro Service Dealer, Toro Master Service Dealer, or Toro Distributor (the Yellow Pages of your telephone directory is a good reference source).
2. He will either instruct you to return the product to him or recommend another Authorized Toro Service outlet which might be more convenient.
3. Bring the product, your maintenance records, and proof of purchase to the Service Dealer.

If, for any reason, you are dissatisfied with the Dealer's analysis of your engine's starting condition, or the assistance provided, please feel free to contact us:

Toro Customer Service Department
8111 Lyndale Avenue South
Minneapolis, Minnesota 55420

What Does This Warranty Not Cover?

This Warranty does not cover:

1. Any repairs on products used commercially.
2. Normal maintenance including replacement of spark plugs, air filter, fuel filter, and carburetor adjustments.
3. Oil change and lubrication.
4. Repairs or adjustments due to:
   a. Failure to follow proper maintenance procedures;
   b. Rotary mower blade striking an object;
   c. Contaminants in the fuel system;
   d. Improper fuel or fuel mixture (consult your owner's manual if in doubt);

e. Failure to drain the fuel system prior to any period of non−use over three months;

f. Operation misuse, neglect or accidents;

g. Repairs or attempted repairs by anyone other than an Authorized Toro Service Dealer.

5. Special operational conditions where starting may require more than two pulls, including:

a. First time starts after extended period of non−use or seasonal storage;

b. Cool temperature starts such as those found in early spring and late fall may require an additional pull or two;

c. Improper starting procedures. If you are having difficulty starting your unit, please check the operator's manual to ensure you are using the correct starting procedures. This can save an unnecessary visit to a Service Dealer.

All warranty repairs reimbursable under this warranty must be performed by an Authorized Toro Service Dealer using Toro approved replacement parts.

The above remedy through repair by an Authorized Toro Service Dealer is the purchaser's sole remedy.

How Does State Law Relate To This Warranty?

There is no other express warranty except for The Toro Total Coverage Guarantee. All implied warranties of merchantability (that the product is fit for ordinary use) and fitness for use (that the product is fit for a particular purpose) are limited to the duration of the express warranty.

Some states do not allow limitation on how long implied warranties last, so the above exclusion may not apply to you.

The Toro Company is not liable for indirect, incidental or consequential damages in connection with the use of the product, including any cost or expense of providing substitute equipment or service during periods of malfunction or non−use.

Some states do not allow exclusions of incidental or consequential damages, so the above exclusion may not apply to you.

This warranty gives you specific legal rights, and you may also have other rights which vary from state to state.

Guaranteed to Start Maintenance Record

To keep the starting guarantee in effect, you must perform the following maintenance after every 25 operating hours, more often in dusty and dirty conditions. Follow the procedures in this Operator's Manual and record information on this chart.

Date	Hours Used	Air Cleaner Service	Change Oil Doesn't Apply to 2−Cycle	Lubricate Wheels	Check Spark Plug	Mower Storage