FORM NO. 3322–581

TORO®

PART NO. 94–5244

INSTALLATION INSTRUCTIONS

HIGH AIR INTAKE KIT

WORKMAN®

For Use with Metal Air Cleaners

1. Remove air inlet hood from elbow on air cleaner. Retain hood for re–installation.

2. Secure new intake hose to air cleaner elbow with hose clamp.

3. Loosely secure tube assembly to seat back with a carriage bolt and flange lock nut. Do not tighten.

4. Loosely secure tube assembly to ROPS post with a clamp, screw and lock nut.

5. Secure intake hose to tube assembly with a hose clamp.

6. Tighten carriage bolt and flange lock nut securing tube assembly to seat back. Also, tighten clamp securing tube assembly to ROPS post.

7. Insert air inlet hood on top of tube assembly.

For Use with Plastic Air Cleaners

1. Remove air inlet hood from rubber elbow on air cleaner. Retain hood for re–installation.

2. Secure new intake hose to rubber air cleaner elbow with splice tube and (2) hose clamps.

3. Loosely secure tube assembly to seat back with a carriage bolt and flange lock nut. Do not tighten.

4. Loosely secure tube assembly to ROPS post with a clamp, screw and lock nut.

5. Secure intake hose to tube assembly with a hose clamp.

6. Tighten carriage bolt and flange lock nut securing tube assembly to seat back. Also, tighten clamp securing tube assembly to ROPS post.

7. Insert air inlet hood on top of tube assembly.

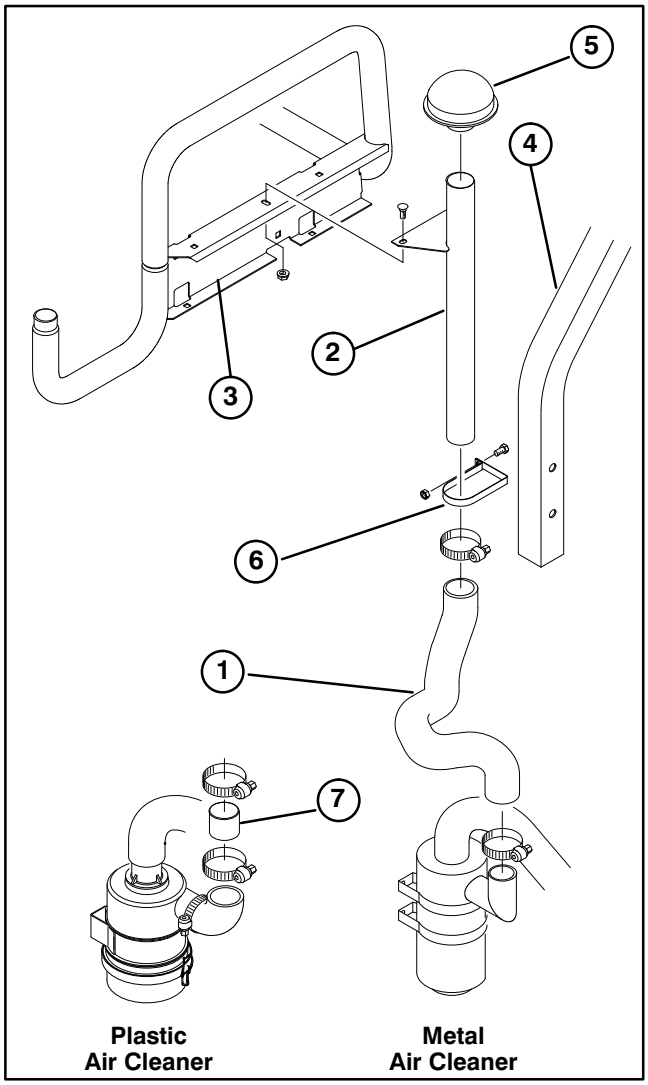

Figure 1

1. Intake hose
2. Tube assembly
3. Seat back
4. ROPS
5. Air inlet hood
6. Clamp
7. Splice tube

©The Toro Company-1998