FORM NO. 3322–582

TORO®

MODEL NO. 04493–90461 & UP

PARTS CATALOG

DETHATCHER KIT
FOR GREENSMASTER® 3000 SERIES

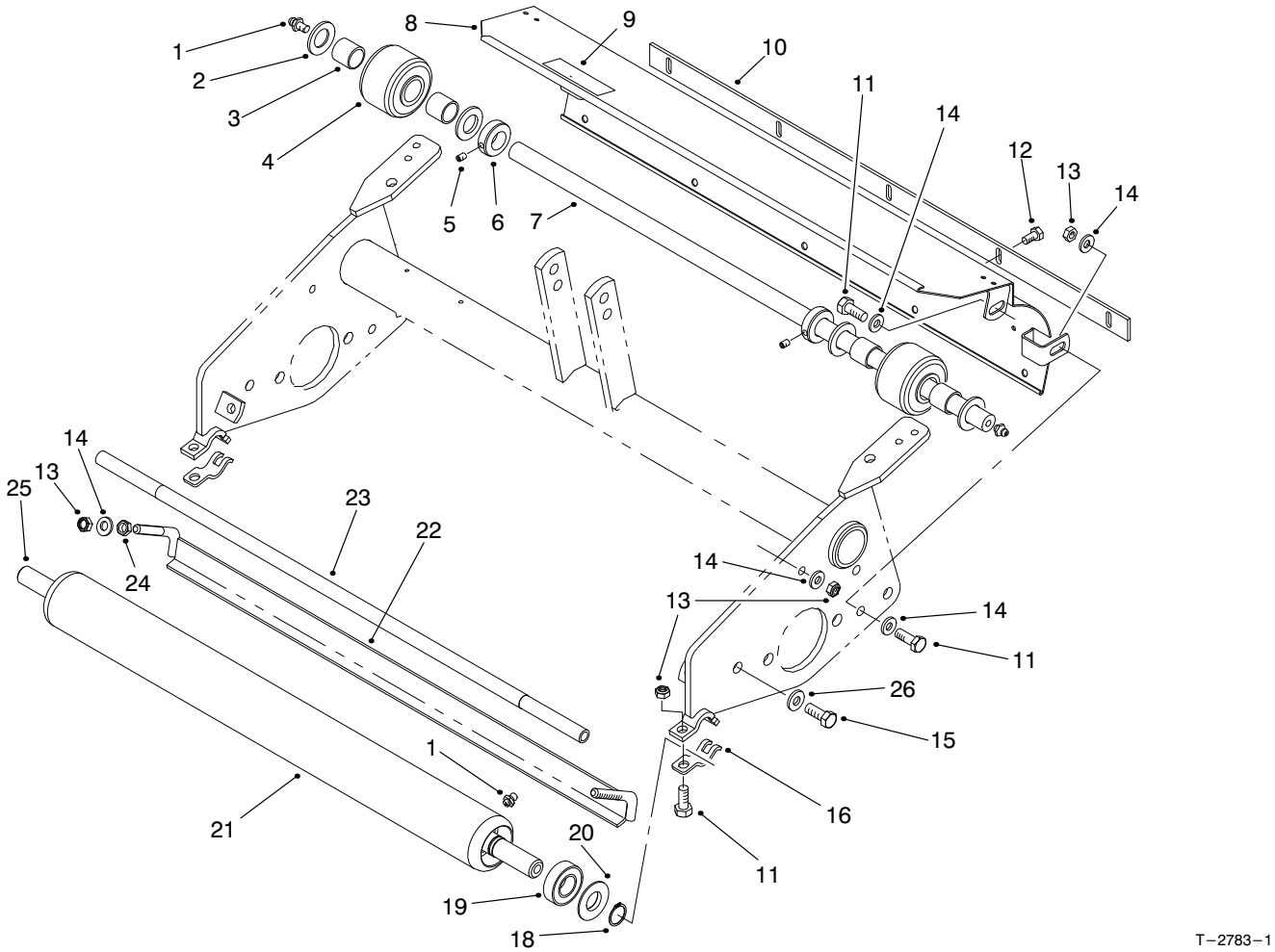

ROLLER ASSEMBLY

PROTOTYPE

Ref. No.	Part No.	Description	No. Used
1	302–5	Fitting–Grease	4
2	257–11	Washer–Thrust	4
3	95–7497	Bushing–Wheel	4
4	94–9211	ASM–Wheel	2
5	3245–1	Screw–Set	2
6	94–9213	Collar–Shaft (Incl. Ref. #5)	2
7	94–9210	Shaft–Wheel, Rear	1
8	98–3551	ASM–Shield, Grass	1
9	67–7960	Decal–Danger, Reel	1
10	36–7260	Bar–Cutoff	1
11	33114–020	Screw–HH	6
12	32144–73	Screw–HHWTF	5
13	33024–00	Nut–Lock	8
14	3256–74	Washer–Flat	10
15	33115–020	Screw–HHF	2
16	99–8168	Collar–Height–of–Cut	2
18	32151–12	Ring–Retaining	2
19	85–9970	ASM–Bearing	2
20	85–7190	Washer–Shield	2
21	95–5943	ASM–Rear Roller (Incl. Ref. #1, 18–20 & 25)	1
22	94–9226	Bracket–Scrapper	1
23	98–2196	Rod–Shield	1
24	33014–00	Nut–Hex.	2
25	95–5946	Shaft–Roller	1
26	3256–24	Washer–Flat	2

©The TORO Company – 1999
All Rights Reserved

3322–582

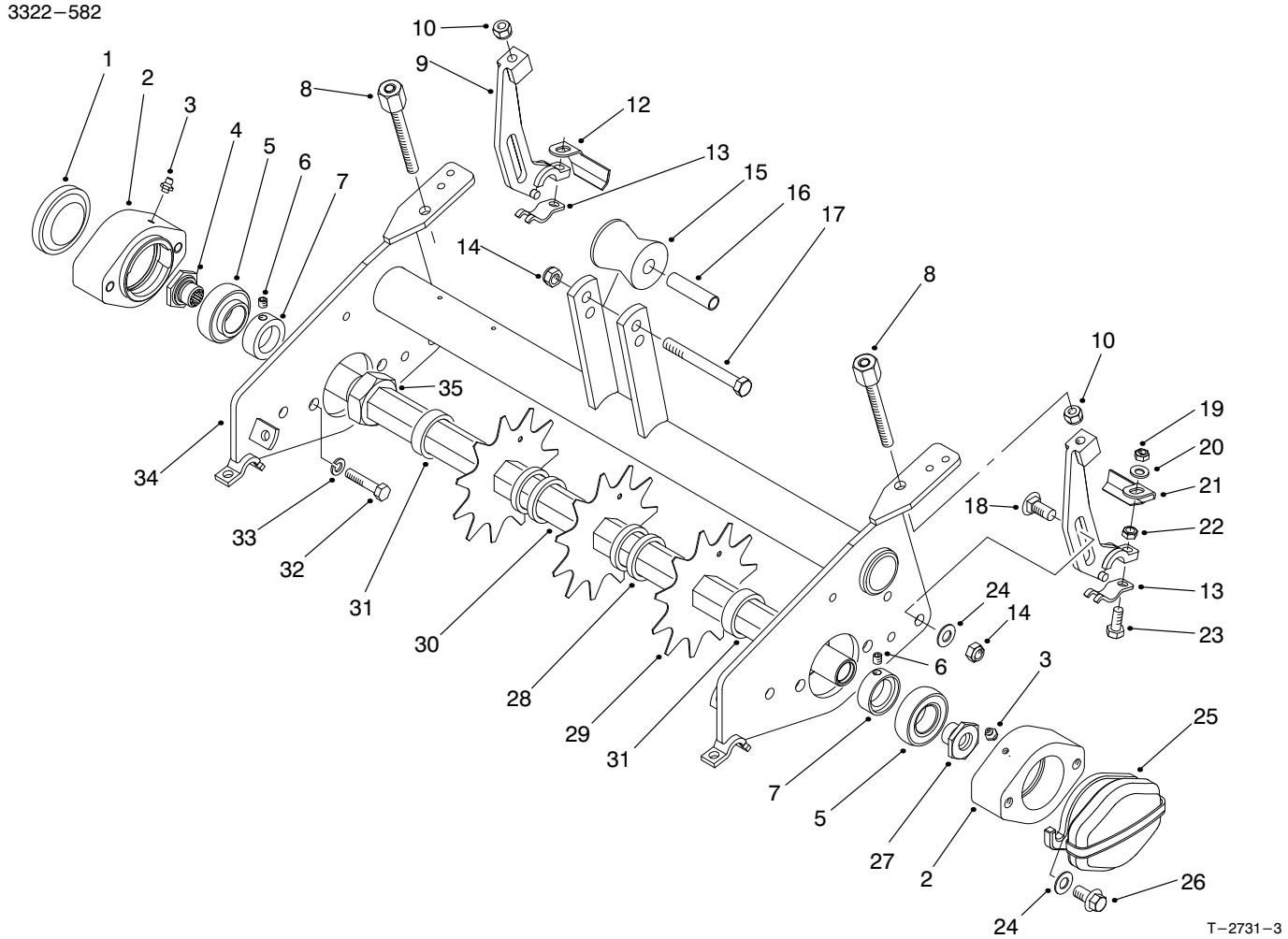

FRAME ASSEMBLY

Ref. No.	Part No.	Description	No. Used
1	2410–30	Cap–Plastic	1
2	95–7148	Housing–Bearing	2
3	302–5	Fitting–Grease	2
4	93–1394	Nut–Spline	1
5	251–337	Bearing–Ball	2
6	3245–35	Screw–Set	2
7	251–77	Collar–Lock	2
8	95–1633	ASM–Adjustment (Height–of–Cut)	2
9	95–1638	Bracket–Height–of–Cut Adjustment, Rear	2
10	3296–5	Nut–Lock	2
12	94–9219	Scraper–Roller, Right	1
13	99–8168	Collar–Height–of–Cut	2
14	33025–00	Nut–Lock	3
15	93–2463	Roller–Lift	1
16	93–2464	Spacer–Roller	1
17	33115–080	Screw–HH	1
18	33125–030	Screw–CARR	2
19	33024–00	Nut–Lock	2
20	3256–74	Washer–Flat	2
21	94–9220	Scrapper–Roller, Left	1

Ref. No.	Part No.	Description	No. Used
22	33014–00	Nut–Hex.	2
23	33114–030	Screw–HH	2
24	3256–24	Washer–Flat	4
25	95–1642	Weight–Counter	1
26	93–2569	Screw–HHF	4
27	94–9214	Nut–Spline, LH	1
28	17–1600	Spacer	72
29	17–1590	Blade–Eleven Tooth	37
30	94–9202	Shaft–Dethatcher	1
31	17–1580	Spacer	2
32	33115–025	Screw–HH	4
33	48–9590	Washer–Lock	4
34	98–3587	Frame–Dethatcher	1
35	3220–18	Nut–Jam	2
*	94–9201	ASM–Shaft, Dethatcher (Incl. Ref. #28–31 & 35)	1
*	94–3405	ASM–Bearing (Incl. Ref. #5–7)	2
*	99–8189	Plate–Gauge .060	4
*	99–8188	Plate–Gauge .120	4
*	99–8187	Plate–Gauge .250	4

*Not Illustrated

PROTOTYPE