Form No. 3428-673 Rev A

TORO®

Count on it.

Parts Catalog

53cm Super Recycler®

Lawn Mower

Model No. 21691—Serial No. 400000000 and Up

Register at www.Toro.com.
Original Instructions (EN)

CE

3428-673 A

Ordering Replacement Parts

To order replacement parts, please supply the part number, the quantity, and the description of each part desired.

Understanding Reference Numbers

Each identified part in an illustration has a reference number. The reference number for a part also appears in the parts list, along with other information about the part.

This catalog uses two special reference number formats, one to indicate parts in a service assembly and another to indicate the quantity of a given part in an illustration.

Service Assembly Reference Numbers

Parts in service assemblies have reference numbers in the form a:b. The a represents the reference number of the entire service assembly and the b represents a sequential number unique to each part within the service assembly.

For example, a wheel assembly might be identified by reference number 6, the tire by 6:1, the valve by 6:2, and the wheel by 6:3. When you order the assembly identified by reference number 6, you receive all parts identified by reference numbers 6:1,6:2, and 6:3. However, you may also order any part individually. Reference numbers of this type appear in illustration and in parts lists.

Reference Numbers Indicating Quantity

In an illustration, if a reference number indicates more than one part, the reference number has the form nX y. The n represents the quantity of the part, the X is the multiplication symbol, and the y represents the reference number.

For example, in an illustration, the reference number 2X 37 means that two of the parts identified by reference number 37 are indicated.

Contents

Housing Assembly 4
Housing Assembly No. 115-2855 6
Side Chute and Rear Door Assembly 8
Bag Assembly 10
Engine and Blade Assembly 12
Front Wheel and Height-of-Cut Assembly 14
Rear Wheel and Height-of-Cut Assembly 16
Handle Assembly 18
Electrical Assembly 20
Attachments and Accessories 22

© 2019—The Toro® Company
8111 Lyndale Avenue South
Bloomington, MN 55420

Contact us at www.Toro.com.
Printed in the USA.
All Rights Reserved

Housing Assembly

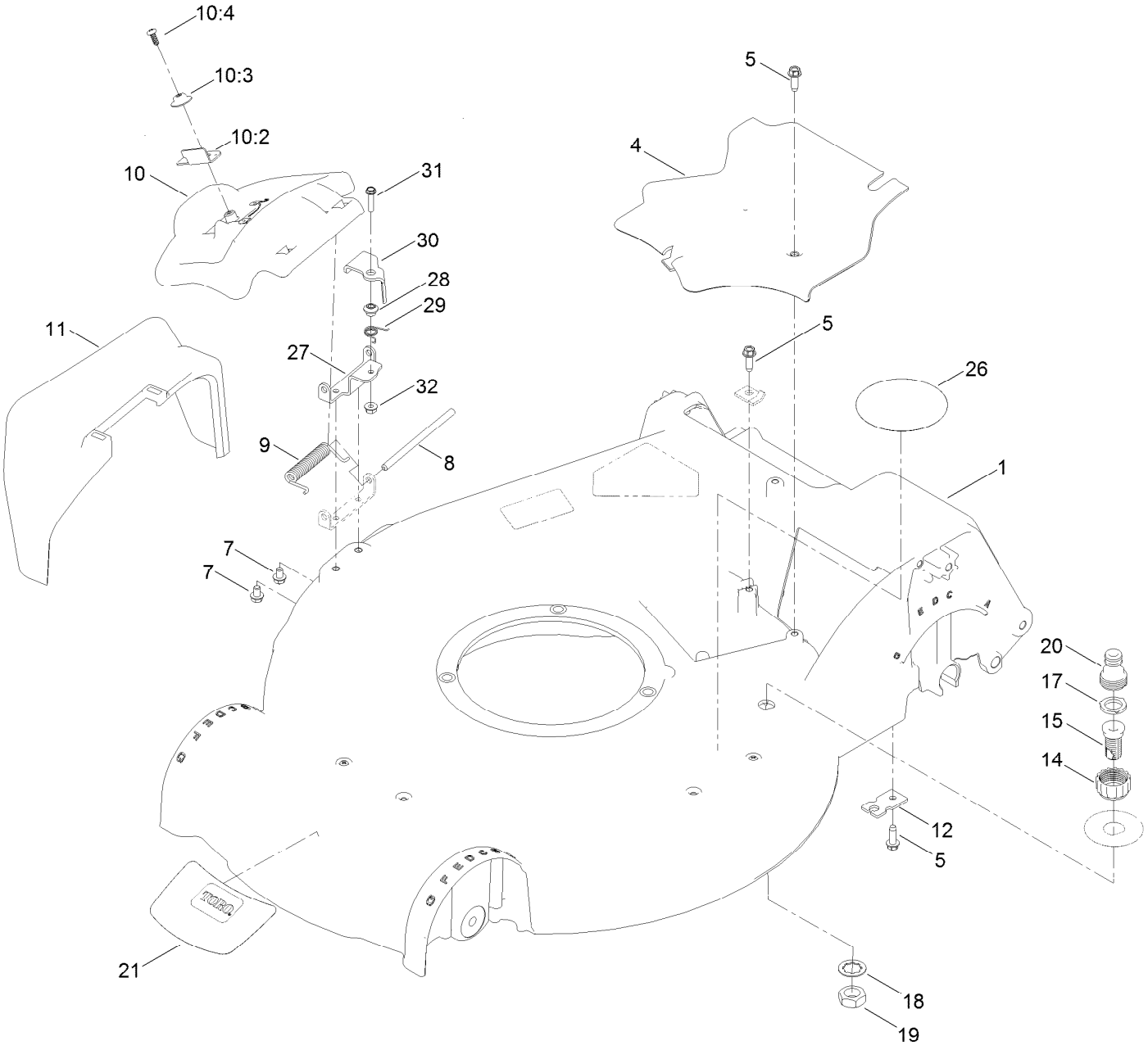

Housing Assembly (continued)

Ref.	Part Number	Qty.	Description
1	115-2855	1	Housing ASM
4	107-7494	1	Cover-Belt
5	49-2040	2	Screw-HWHTF
7	137-4795	2	Screw
8	99-5291	1	Rod-Cover
9	99-5293	1	Spring-Torsion
10	138-3259	1	Discharge Door ASM
10:2	138-3221	1	Latch-Door
10:3	138-3242	1	Cap-Door
10:4	137-9137	1	Screw-PPH
11	108-3753	1	Chute-Discharge, Side
12	138-3224	1	Bracket-Cable, Traction
14	112-6401	1	Coupling-Hose, Washout Port
15	112-6400	1	Port-Washout
17	112-6438	1	Washer-Seal, Washout Port
18	139-1721	1	Washer-Lock, Int Tooth
19	3218-6	1	Nut-Jam
20	112-6437	1	Adapter-Connect, Quick
21	136-7098	1	Decal-Deck
26	133-1986	1	Decal-Pos
27	138-3293	1	Bracket-Lockout
28	107-7463	1	Spacer
29	107-7462	1	Spring-Torsion
30	138-3292	1	Lever-Lockout
31	106-9169	1	Screw-HWH
32	139-1712	1	Nut-Hex Flange

Housing Assembly No. 115-2855

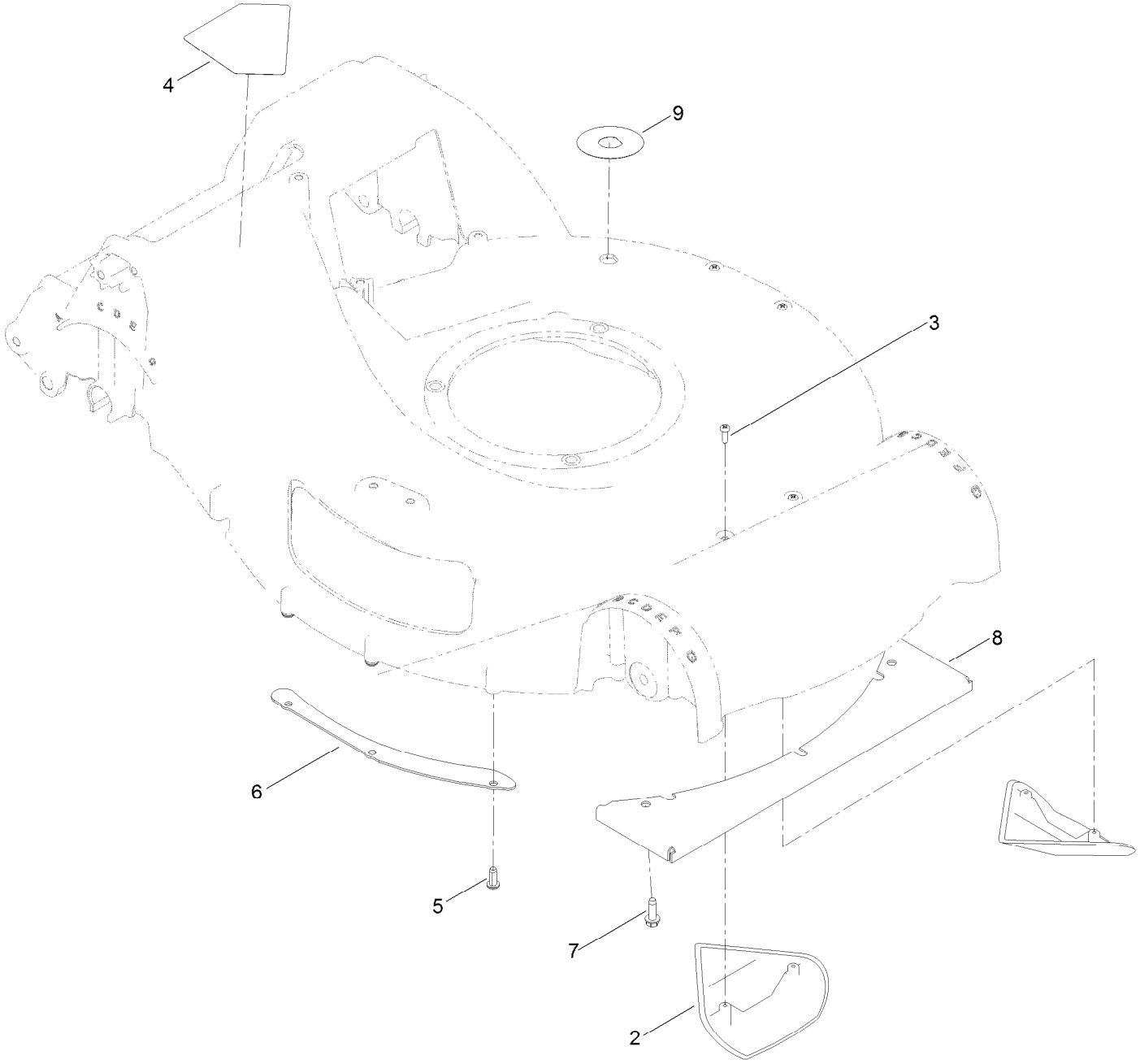

Housing Assembly No. 115-2855 (continued)

Ref.	Part Number	Qty.	Description
2	108-3798	2	Kicker-Housing
3	32144-111	4	Screw-PPH
4	112-8760	1	Decal-Danger
5	63-8590	3	Screw
6	105-1316-03	1	Sheet-Lip
7	49-2040	3	Screw-HWHTF
8	108-3797-03	1	Plate-Cover, Front
9	137-9196	1	Decal-Quick Wash

Side Chute and Rear Door Assembly

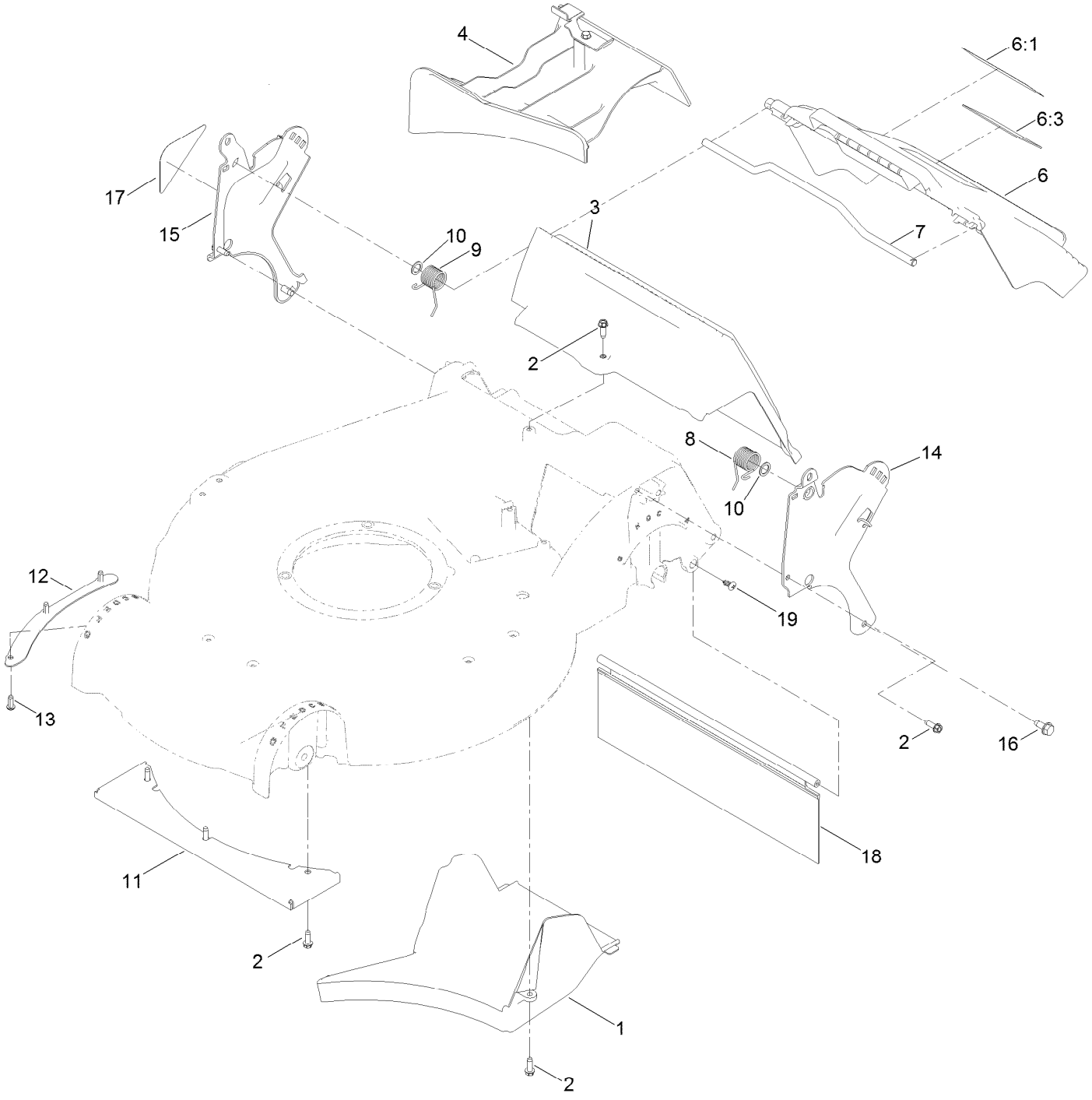

Side Chute and Rear Door Assembly (continued)

Ref.	Part Number	Qty.	Description
1	107-7495	1	Tunnel-Discharge
2	49-2040	8	Screw-HWHTF
3	114-2668	1	Chute
4	139-5400	1	Mulch Plug ASM
6	119-3803	1	Rear Door ASM
6:1	131-4514	1	Decal-Warning
6:3	104-7908	1	Decal-Warning
7	117-9378	1	Rod-Deflector
8	115-2859	1	Spring-Torsion
9	114-7924	1	Spring-Torsion
10	94-8196	2	Washer-Nylon
11	108-3797-03	1	Plate-Cover, Front
12	105-1316-03	1	Sheet-Lip
13	63-8590	3	Screw
14	114-2671-03	1	Bracket-Handle, LH
15	114-2672-03	1	Bracket-Handle, RH
16	32144-70	2	Screw-HWHTF
17	115-2884	1	Decal-Instruction
18	120-7011	1	Shield-Trailing
19	139-1692	2	Screw-Thd

Bag Assembly

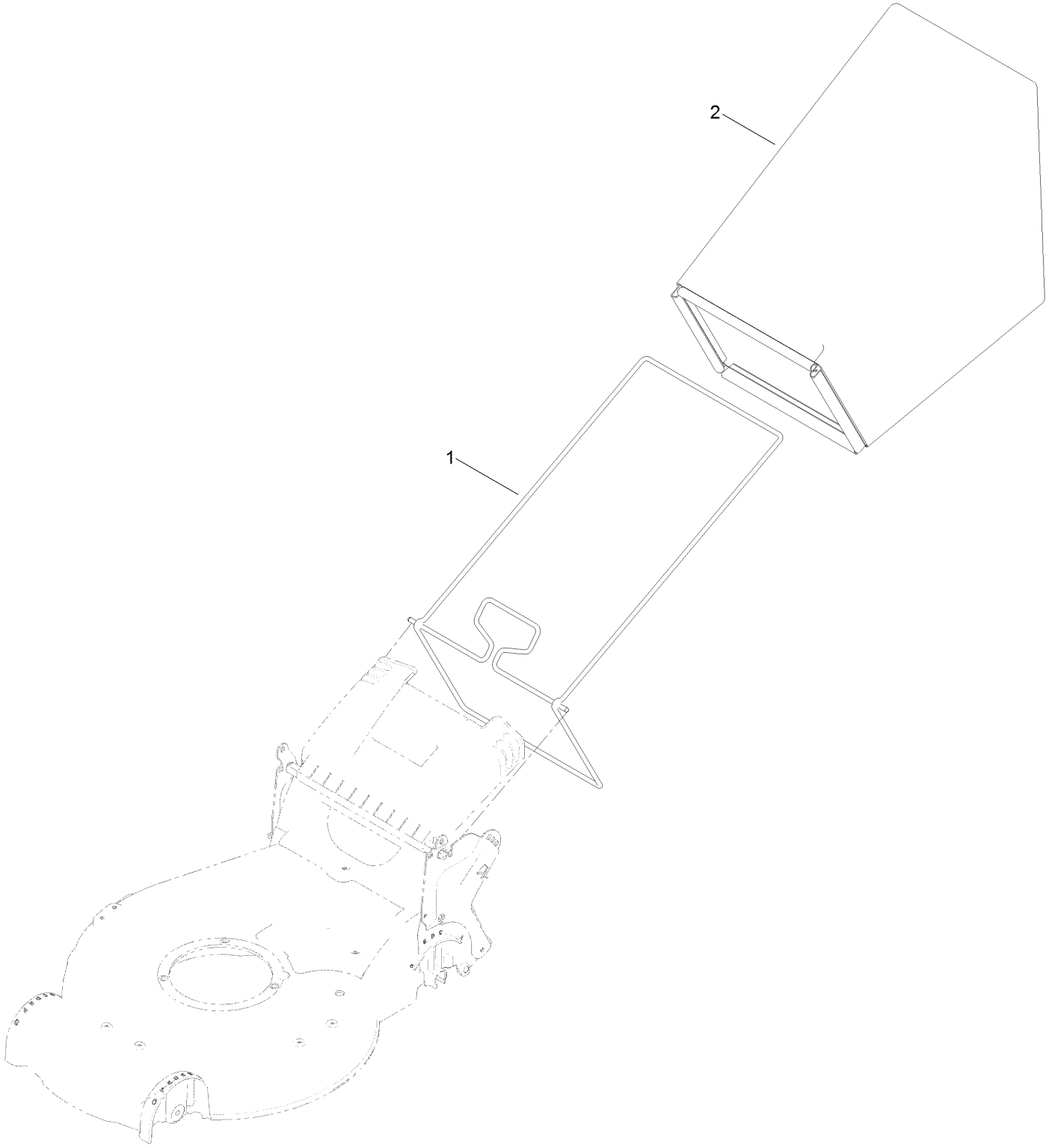

Bag Assembly (continued)

Ref.	*Part Number*	*Qty.*	*Description*
1	132-4529-03	1	Bag Frame ASM
2	114-2664	1	Grass Bag ASM

Engine and Blade Assembly

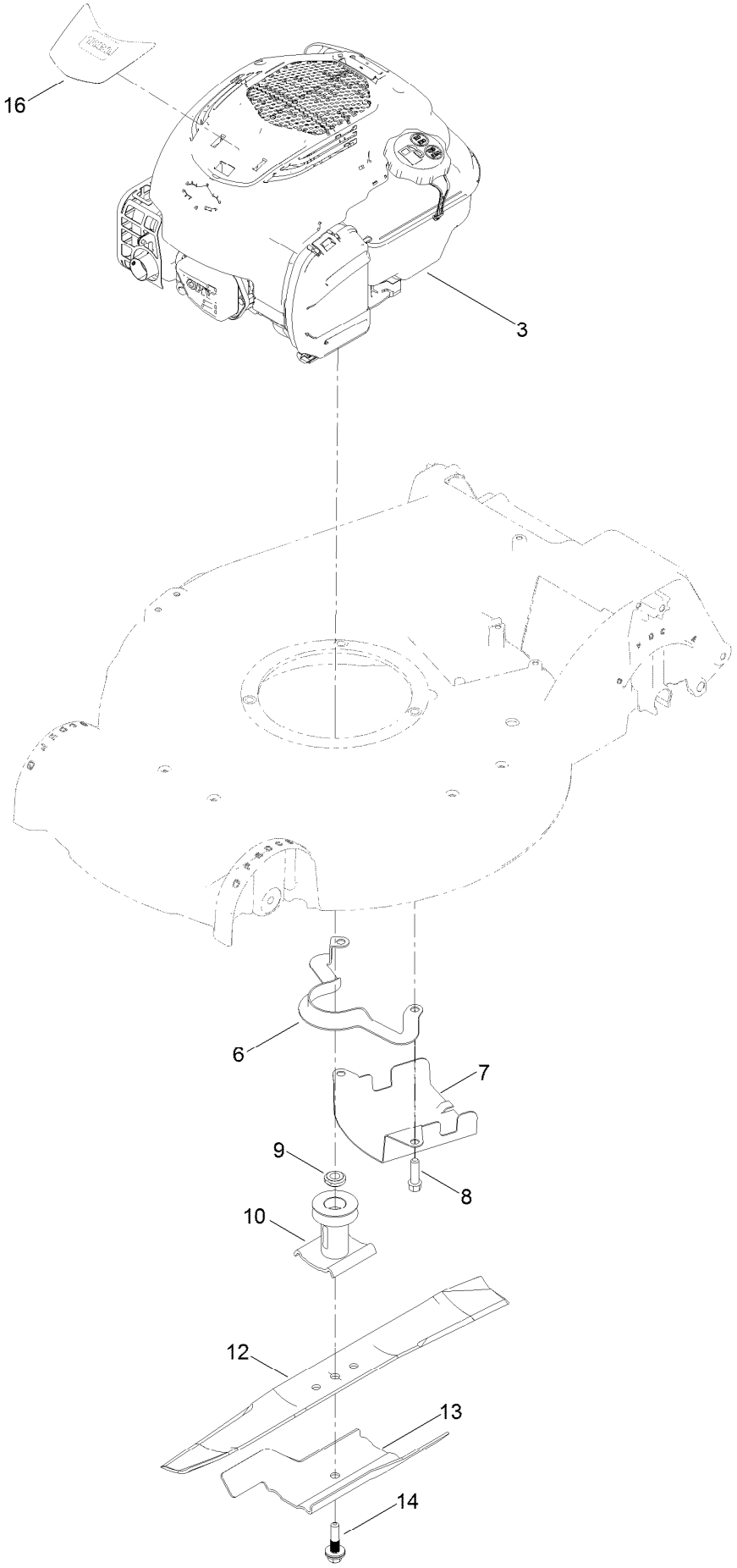

Engine and Blade Assembly (continued)

Ref.	Part Number	Qty.	Description
3		1	Engine-Briggs 104M050051F1 ●■
6	108-8110-03	1	Guide-Belt
7	107-7489-03	1	Shield-Grass
8	95-1727	3	Screw-Taptite
9	106-3999	1	Spacer-Driver
10	106-3987	1	Driver-Blade
12	133-8183-03	1	Blade-21In, Recycling
13	105-6848-03	1	Accelerator-Blade
14	125-2466	1	Bolt-Blade
16	132-4472	1	Decal-Shroud

● Not serviced separately

■ Obtain parts from www.briggsandstratton.com

Front Wheel and Height-of-Cut Assembly

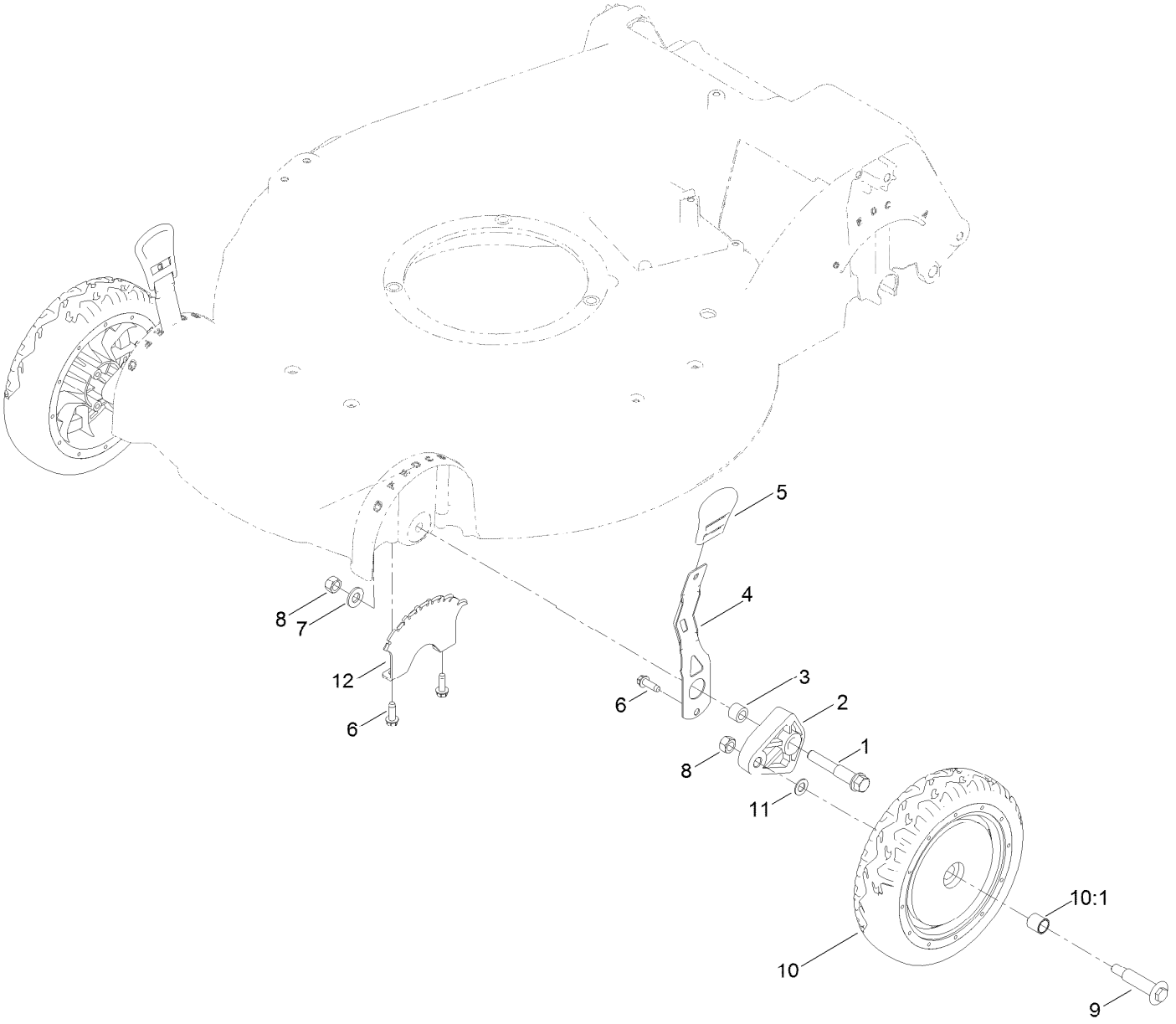

Front Wheel and Height-of-Cut Assembly (continued)

Ref.	Part Number	Qty.	Description
1	114-3467	2	Screw-Shoulder
2	107-7492	2	Arm-Pivot
3	52-2480	2	Spacer-Wheel
4	107-7491	2	Arm-Spring
5	110-0549	2	Knob-HOC
6	49-2040	6	Screw-HWHTF
7	115-1166	2	Washer-Flat
8	603773	4	Locknut
9	92-1057	2	Bolt-Shoulder
10	107-3706	2	8 Inch Wheel ASM
10:1	27-6250	2	Bushing
11	40-1940	2	Washer
12	139-1669-05	2	Plate-HOC

Rear Wheel and Height-of-Cut Assembly

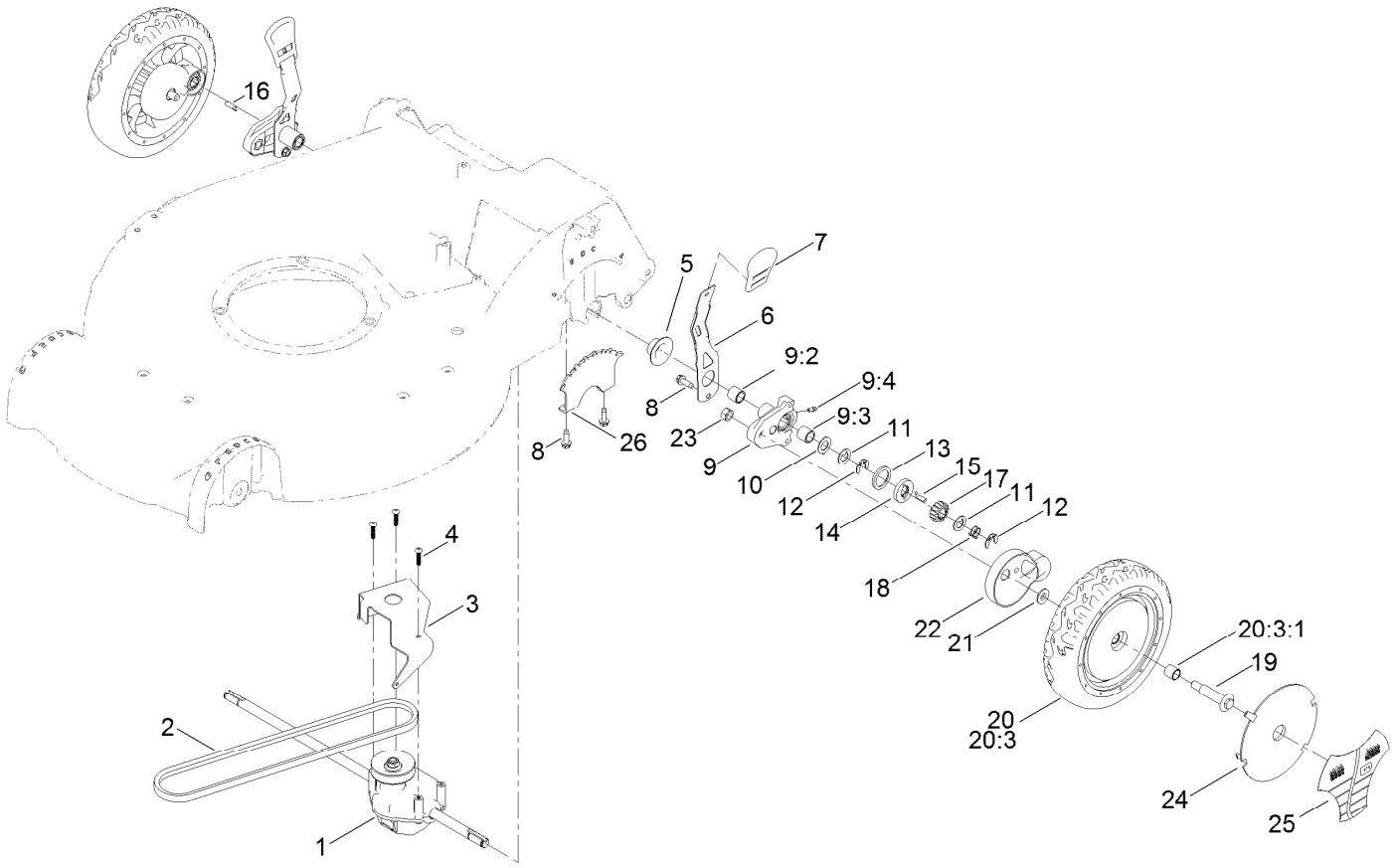

Rear Wheel and Height-of-Cut Assembly (continued)

Ref.	Part Number	Qty.	Description
1	121-9184	1	Transmission ASM
2	115-4669	1	Belt-V
3	114-7977-03	1	Bracket-Transmission
4	120-9676	3	Screw-Plastite
5	138-3235	2	Cap-End
6	107-7491	2	Arm-Spring
7	110-0549	2	Knob-HOC
8	49-2040	6	Screw-HWHTF
9	100-8774	2	Pivot Arm ASM
9:2	47-2900	1	Bushing
9:3	70-9760	1	Bushing
9:4	302-56	1	Fitting-Grease
10	65-4730	2	Washer-Arm, Pivot
11	65-4740	4	Washer-Thrust, Keyed
12	65-2720	4	Ring-Retaining, Clip
13	65-4710	2	Ring-Friction
14	65-4760	2	Washer-Clutch
15	66-6050	1	Key-Rocking, LH
16	66-6040	1	Key-Rocking, RH
17	65-4750	2	Gear-Pinion
18	65-4720	2	Spring-Compression
19	92-1057	2	Bolt-Shoulder
20	107-3707	2	8 Inch Wheel And Gear ASM
20:3		1	8 Inch Wheel ASM ●
20:3:1	27-6250	2	Bushing
21	74-1671	2	Spacer-Cover, Wheel
22	74-1660	2	Cover-Wheel
23	603773	2	Locknut
24	100-6351	1	Cover-Wheel
25	100-1519	1	Label-Wheel, Smart
26	139-1669-05	2	Plate-HOC

● Not serviced separately

Handle Assembly

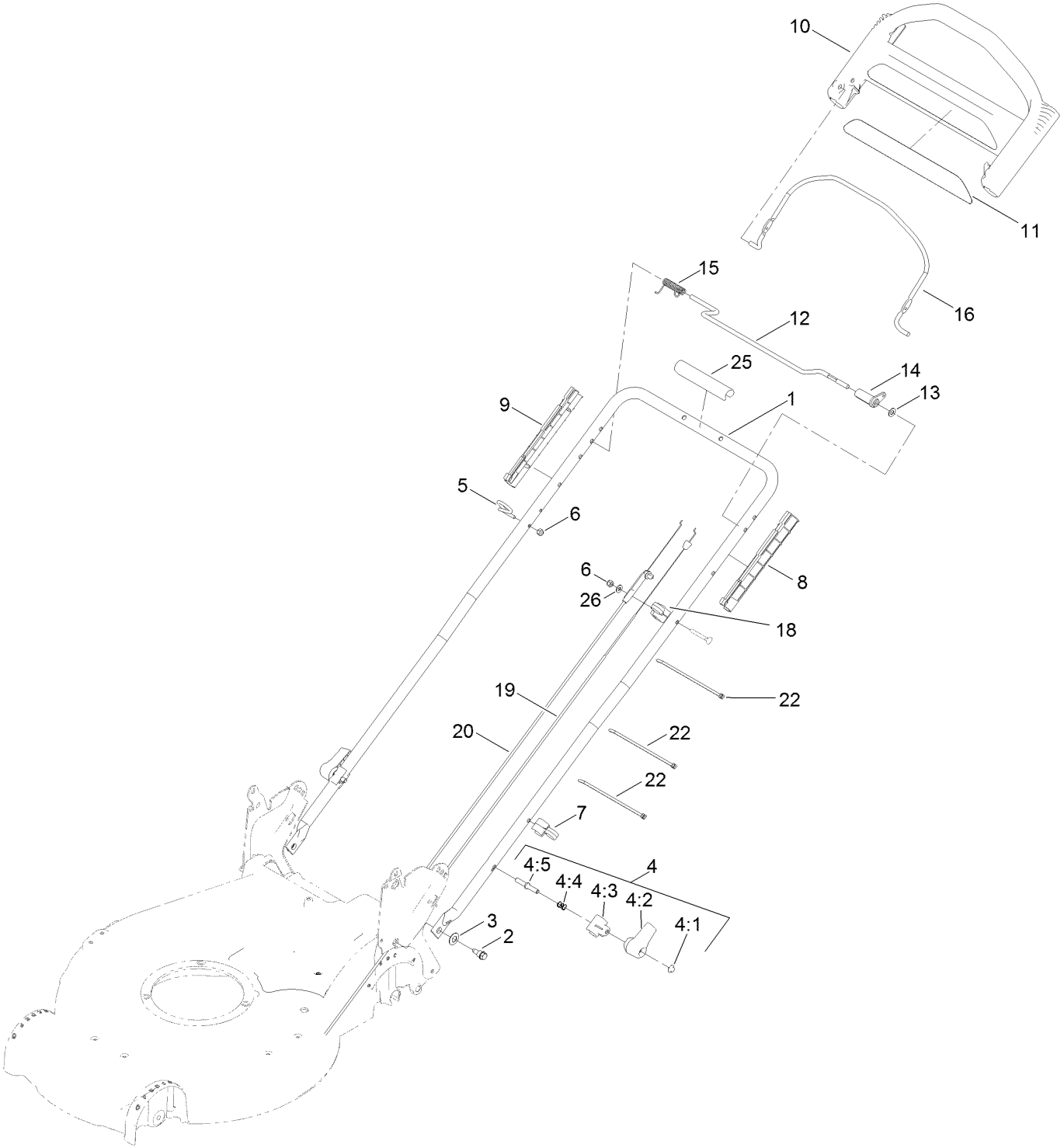

Handle Assembly (continued)

Ref.	Part Number	Qty.	Description
1	132-4460-05	1	Handle
2	139-1691	2	Bolt-Shoulder
3	112-9972	2	Washer-Spring, Conical
4	115-2860	2	Quick Release ASM
4:1	32112-11	1	Nut-Push
4:2	138-3248	1	Lever-Release
4:3	138-3253	1	Anchor-Spring
4:4	115-2858	1	Spring-Compression
4:5	138-3243	1	Rod-Release
5	86-9671	1	Guide-Rope
6	137-3094	2	Nut-Hex
7	114-7988	1	Guide-Cable
8	105-6842	1	Guide-LH
9	105-6841	1	Guide-RH
10	104-8678	1	Handle-Control
11	120-3911	1	Decal-Handle
12	136-7150	1	Bar-Control, Traction
13	120-9683	1	Washer-Plain
14	99-1589	1	Lever-Traction
15	136-7166	1	Spring-Torsion
16	131-0880-03	1	Bail-Brake
18	136-5864	1	Anchor-Cable
19	117-9389	1	Cable-Traction
20	117-5900	1	Cable-Brake
22	614249	3	Tie-Cable
25	131-4551	1	Cover-Handle
26	139-1699	1	Washer-Flat

Electrical Assembly

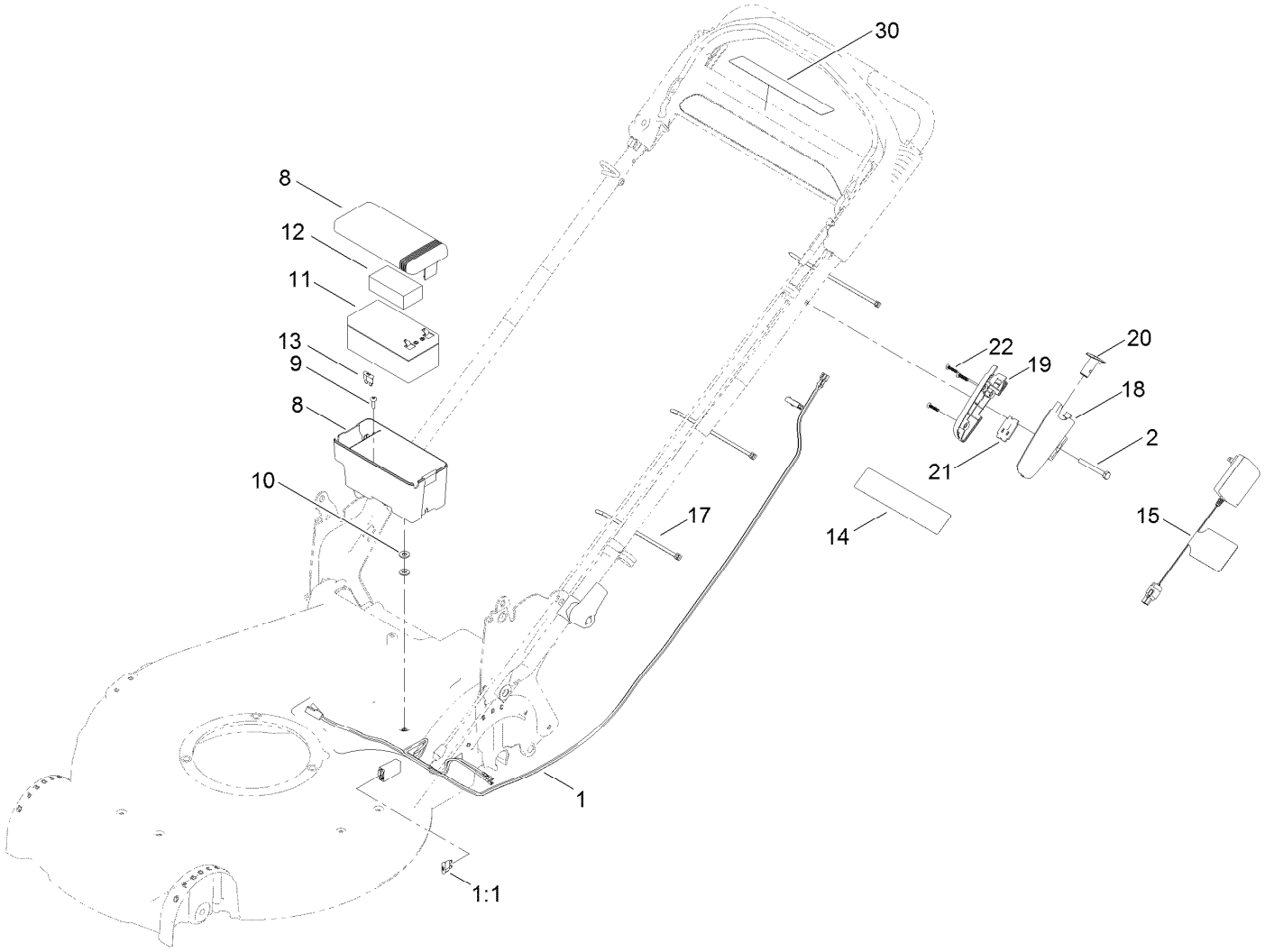

Electrical Assembly (continued)

Ref.	Part Number	Qty.	Description
1	125-5025	1	Harness-Wire
1:1	99-6124	1	Fuse-40 Amp
2	137-3034	1	Screw-HH
8	108-4844	1	Battery Box ASM
9	139-1714	1	Screw-Thd Form
10	120-9679	2	Washer-Flat
11	106-8397	1	Battery-Wet
12	107-3774	1	Foam-Battery, Top
13	99-6124	1	Fuse-40 Amp
14	104-7953	1	Decal-Warning
15	137-9153	1	Charger, Battery (12V, CE)
17	614249	3	Tie-Cable
18	133-8160	1	Housing-Switch, LH
19	133-8161	1	Housing-Switch, RH
20	125-2470	1	Button-Switch
21	121-9173	1	Switch-Push Button
22	94-4496	3	Screw-PPH
30	133-1900	1	Decal-Button, Push

Attachments and Accessories

For 21691 53cm Super Recycler Lawn Mower

Product Name	Model/Part
All Season Synthetic Oil (10W30, QT)	117-0066
4-Cycle Fuel, Snow And Lawn 32oz Can	131-3823
Traction Assist Handle Kit	131-4590
Toro Premium Fuel Treatment 12 Oz Bottle	131-6572
Toro 4-Cycle SAE 30 Oil (32oz Bottle)	38903
Summer Oil-Case of 24 (20oz Bottles)	38916
Bag-Walk Behind (Toro)	490-7318
Lawnmower Cover	490-7462

Notes:



Count on it.