TORO®

MODEL NO. 99−9316	PARTS CATALOG

12 VOLT STARTER KIT
SNOWTHROWER

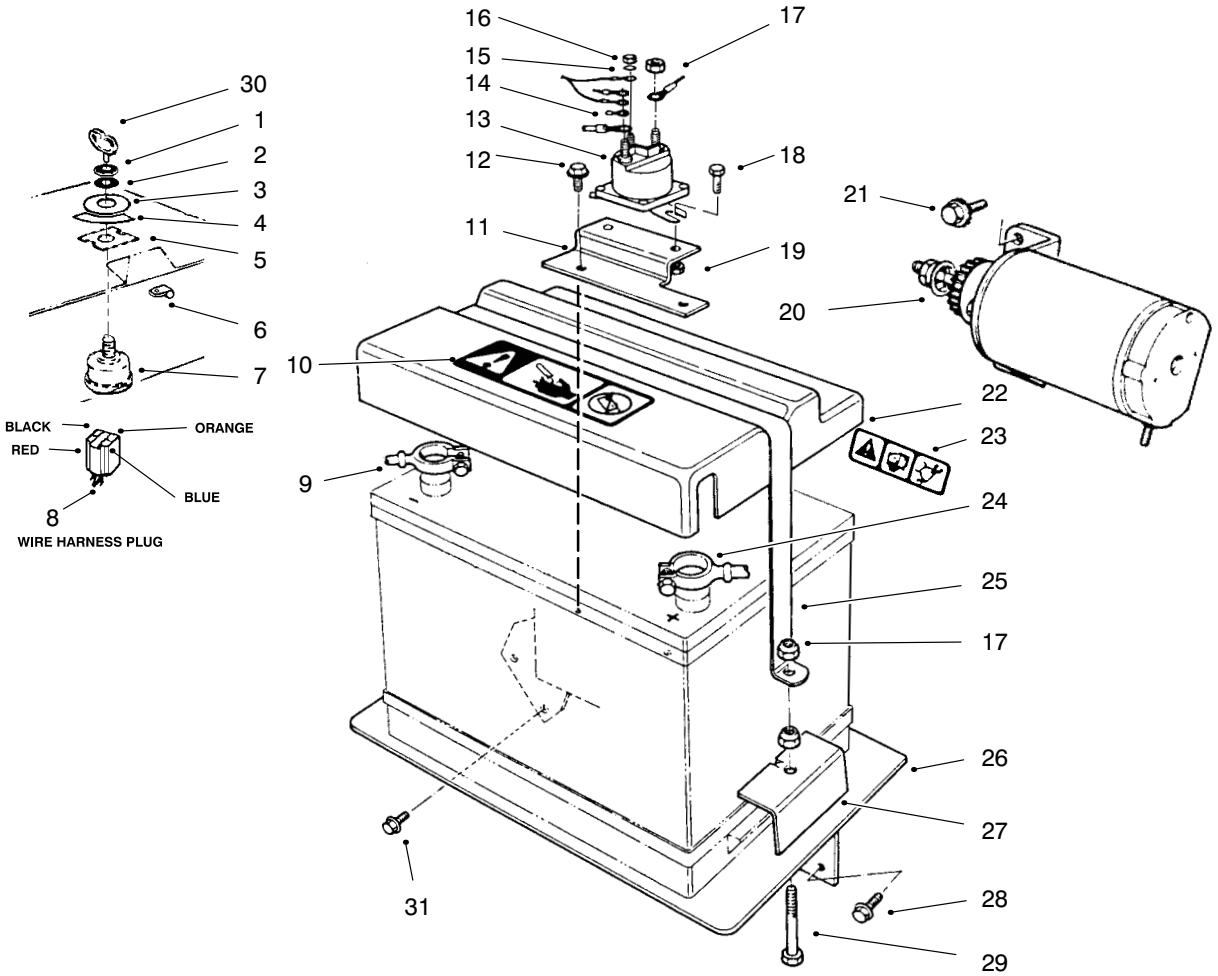

STARTER MOTOR AND BATTERY WIRE ASSEMBLY

Ref. No.	Part No.	Description	No. Used
1	218−461	Nut − Hex.	1
2	3254−5	Washer − Switch	1
3	66−7690	Washer − Cover	1
4	94−2588	Decal Key Switch	1
5	66−7680	Adapter − Key Switch	1
6	2412−101	Clip − Wire	2
7	23−0660	Switch − Starter (Incl. Ref.# 1 & 2)	1
8	99−9317	Wire Asm. Ignition	1
9	22−9330	Cable − Battery, Neg.	1
10	94−2589	Decal − Battery Cover	1
11	66−7630	Bracket − Solenoid	1
12	32144−10	Screw − HH	2
13	6−1600	Solenoid	1
14	218−575	Ring − Terminal	1
15	3254−1	Washer − Lock	1
16	3219−14	Nut − Hex	1

Ref. No.	Part No.	Description	No. Used
17	3296−29	Nut − Hex. Lock	6
18	321−2	Screw − HH	2
19	3296−42	Nut − Hex. Lock	2
†20	1A173−102	Motor − Starter, Tecumseh	1
†21	42−817	Screw − HHF, Tecumseh	2
22	22−8900	Cover − Battery	1
23	94−2575	Decal − Warning	1
24	22−9320	Cable − Battery, Pos.	1
25	22−8850−03	Strap − Battery	1
26	66−7600−03	Plate − Battery	1
27	22−8870	Clamp − Battery	2
28	3234−17	Screw − HHF	2
29	322−11	Screw − HH	2
30	63−8360	Key−Switch	1
31	3234−5	Screw−HH	2
*	32152−4	Nut	1
*	3290−378	Tie − Cable	5

* Not Illustrated
† Purchase From Tecumseh

©The Toro Company − 1998
All Rights Reserved

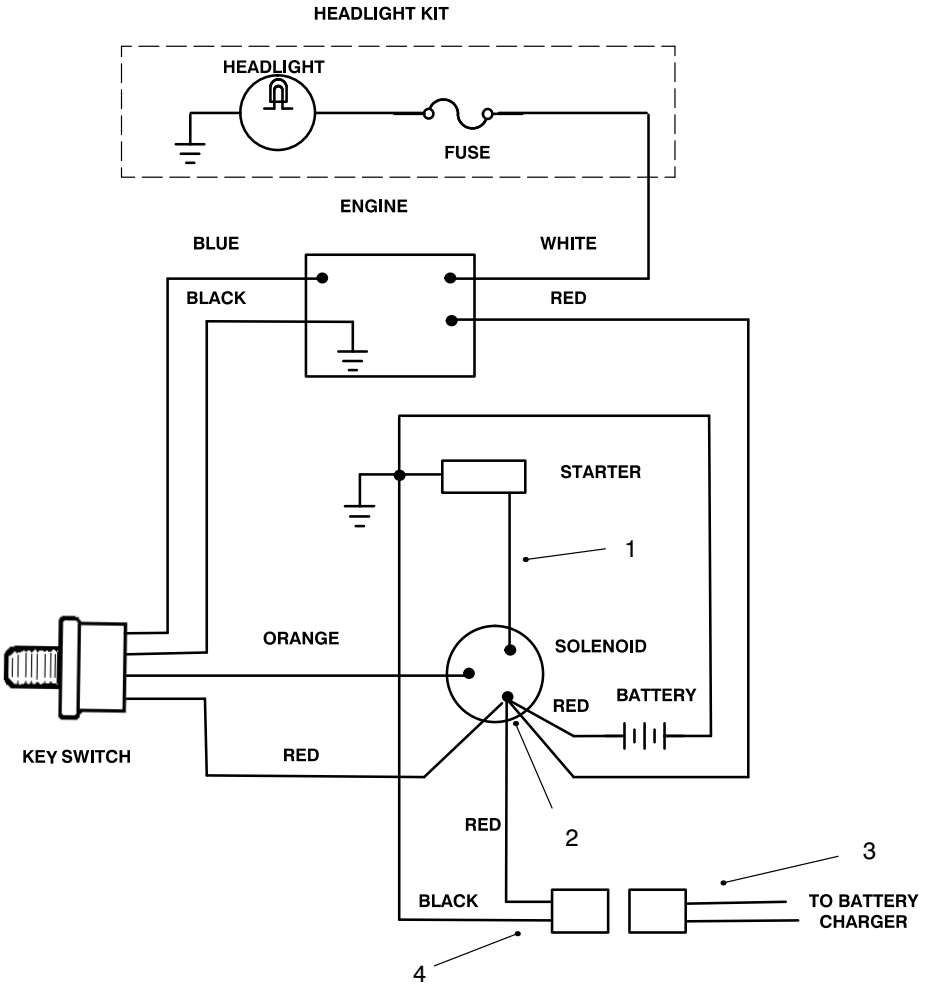

C−2354

ELECTRIC SCHEMATIC

Ref. No.	Part No.	Description	No. Used
1	94−2777	Wire Assembly	1
2	218−575	Ring − Terminal	1

Ref. No.	Part No.	Description	No. Used
3	29−7820	Wire Asm. Charger Adapt	1
4	29−7830	Wire Asm. Charger	1