Form No. 3422-698 Rev B

TORO®

Count on it.

Operator's Manual

Greensmaster® eFlex® 2120 Traction Unit

Model No. 04046—Serial No. 403063147 and Up
Model No. 04047—Serial No. 400000000 and Up

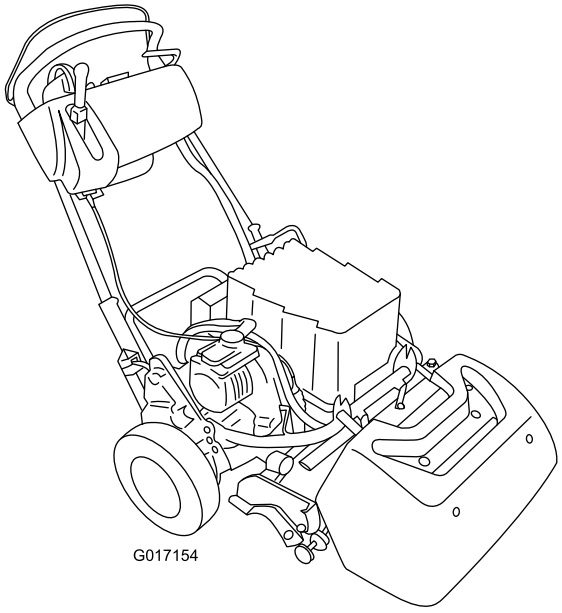

G017154

Register at www.Toro.com.
Original Instructions (EN)

CE

3422-698 B

This product complies with all relevant European directives; for details, please see the separate product specific Declaration of Conformity (DOC) sheet.

⚠ WARNING

CALIFORNIA
Proposition 65 Warning

The power cord on this product contains lead, a chemical known to the State of California to cause birth defects or other reproductive harm. Wash hands after handling.

Battery posts, terminals, and related accessories contain lead and lead compounds, chemicals known to the State of California to cause cancer and reproductive harm. Wash hands after handling.

Use of this product may cause exposure to chemicals known to the State of California to cause cancer, birth defects, or other reproductive harm.

Introduction

This machine is a walk-behind, reel-blade lawn mower intended to be used by professional, hired operators in commercial applications. It is primarily designed for cutting grass on well-maintained lawns in parks, golf courses, sports fields, and on commercial grounds. It is not designed for cutting brush, mowing grass and other growth alongside highways, or for agricultural uses.

Important: **To maximize the safety, performance, and proper operation of this machine, carefully read and fully understand the contents of this *Operator's Manual*. Failing to follow these operating instructions or to receive proper training may result in injury. For more information on safe operating practices, including safety tips and training materials, go to www.Toro.com.**

You may contact Toro directly at www.Toro.com for product and accessory information, help fining a dealer, or to register your product.

Whenever you need service, genuine Toro parts, or additional information, contact an authorized Toro distributor and have the model and serial numbers of your product ready. The model and serial numbers are located on a plate on the rear frame. Write the numbers in the space provided.

Important: **With your mobile device, you can scan the QR code (if equipped) on the serial number decal to access warranty, parts, and other product information.**

© 2018—The Toro® Company
8111 Lyndale Avenue South
Bloomington, MN 55420

Contact us at www.Toro.com.
Printed in the USA
All Rights Reserved

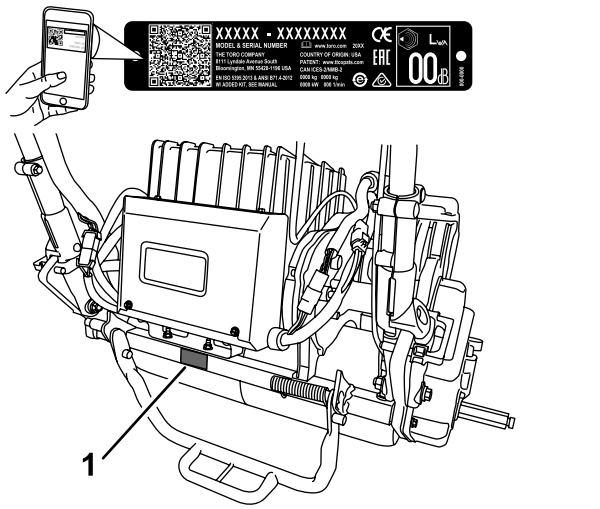

Figure 1

1. Model and serial number location
2. Battery pack manufacturer's information

Model No. _____

Serial No. _____

This manual identifies potential hazards and has safety messages identified by the safety-alert symbol (Figure 2), which signals a hazard that may cause serious injury or death if you do not follow the recommended precautions.



g000502

Figure 2

Safety-alert symbol

This manual uses 2 words to highlight information. **Important** calls attention to special mechanical information and **Note** emphasizes general information worthy of special attention.

Contents

Safety 4
General Safety 4
Safety and Instructional Decals 5
Setup 8
1 Installing the Target Plate 9
2 Preparing the Traction Unit 9
3 Installing the Cutting Unit to the Traction Unit 9
4 Installing the Handle Retainers 10
5 Installing the Battery Pack 11
6 Adjusting the EZ-Turn Sensor 14
7 Installing the Transport Wheels 14
8 Installing the Production-Year Decal 15
9 Installing the Grass Basket 16
10 Breaking in the Machine 16
Product Overview 17
Controls 17
Specifications 21
Attachments/Accessories 21
Before Operation 21
Before Operation Safety 21
Performing Daily Maintenance 21
Setting the Machine to Match Turf Conditions 22
Adjusting the Handle Height 23
Adjusting the Handle Angle 23
Adjusting the Throttle Control 23
Checking the Operation of the Interlock Switches 24
Transporting the Machine to a Job Site 25
During Operation 25
During Operation Safety 25
Starting the Machine 26
Shutting Off the Machine 26
Releasing the Transmission 26
Using the InfoCenter LCD Display 27
Operating Tips 29
After Operation 30
After Operation Safety 30
Transporting the Machine 30
Maintaining the Lithium Ion Battery Pack 30
Maintenance 32
Recommended Maintenance Schedule(s) 32
Daily Maintenance Checklist 33
Pre-Maintenance Procedures 34
Maintenance Safety 34
Disconnecting the Battery 34
Lubrication 35
Greasing the Motor Coupler 35
Electrical System Maintenance 35
Electrical System Safety 35
Servicing the Battery Pack 35
Shipping the Battery Pack for Service 35
Replacing Fuses 36

Servicing the Traction Interlock Switch 36
Servicing the Mow Sensor 37
Servicing the Brake-Interlock Switch 37
Brake Maintenance 38
Adjusting the Service/Parking Brake 38
Belt Maintenance 38
Inspecting the Reel Drive Belt 38
Accessing the Transmission Cover Hole 39
Engaging/Disengaging the Transmission-Belt Tensioner 39
Controls System Maintenance 40
Adjusting the Reel Control 40
Cleaning 41
Cleaning the Machine 41
Storage 42
Storage Safety 42
Storing the Machine 42
Removing the Machine from Storage 42

Safety

This machine has been designed in accordance with EN ISO 5395:2013 and ANSI B71.4-2017 and meets these standards when you add the required decals.

General Safety

This product is capable of amputating hands and feet and of throwing objects. Always follow all safety instructions to avoid serious personal injury.

Using this product for purposes other than its intended use could prove dangerous to you and bystanders.

- Read and understand the contents of this *Operator's Manual* before starting the machine.
- Do not put your hands or feet near moving components of the machine.
- Do not operate the machine without all guards and other safety protective devices in place and working on the machine.
- Keep clear of any discharge opening. Keep bystanders a safe distance away from the machine.
- Keep children out of the operating area. Never allow children to operate the machine.
- Shut off the machine and disconnect the battery before servicing or unclogging the machine.

Improperly using or maintaining this machine can result in injury. To reduce the potential for injury, comply with these safety instructions and always pay attention to the safety-alert symbol (Figure 2), which means Caution, Warning, or Danger—personal safety instruction. Failure to comply with these instructions may result in personal injury or death.

You can find additional safety information where needed throughout this manual.

Safety and Instructional Decals

Safety decals and instructions are easily visible to the operator and are located near any area of potential danger. Replace any decal that is damaged or missing.

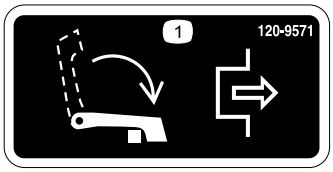

decal120-9571

120-9571

1. Lower the lever to disengage the traction.



decal120-9570

120-9570

1. Warning—stay away from moving parts, keep all guards and shields in place.



decal120-9573

120-9573

1. Read the *Operator's Manual*.
2. Warning—do not operate the machine unless you are trained.
3. Warning—keep bystanders away from the battery.
4. Electrical shock hazard—do not allow tools to short circuit battery posts when performing maintenance.



decal120-9593

120-9593

1. Read the *Operator's Manual*.
2. Warning—do not operate the machine unless you are trained.
3. Thrown object hazard—keep bystanders a safe distance away from the machine.
4. Warning—stay away from moving parts, keep all guards and shields in place.
5. Do not tow the machine.

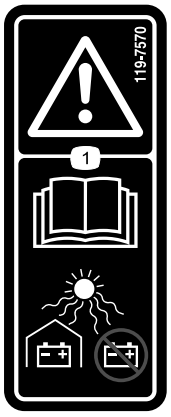

decal119-7570

119-7570

1. Warning—read the *Operator's Manual*; keep batteries sheltered, do not store in direct sunlight.

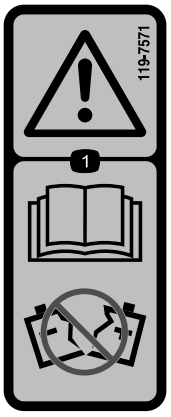

decal119-7571

119-7571

1. Warning—read the *Operator's Manual*; do not use a battery with a cracked or damaged housing.

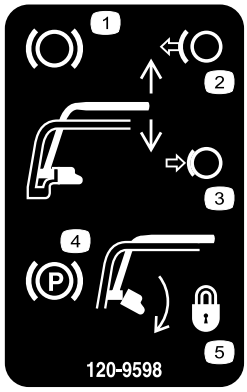

decal120-9598

120-9598

1. Brake
2. Release handle to disengage the brake.
3. Compress the handle to engage the brake lever.
4. Parking brake
5. Rotate the latch to lock the parking brake; compress the handle to release the latch.

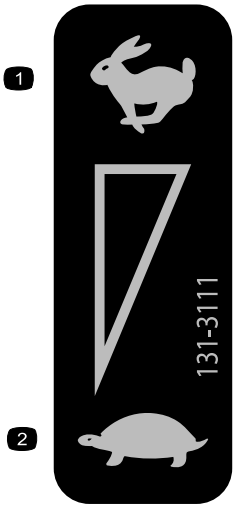

decal131-3111

131-3111

1. Fast
2. Slow

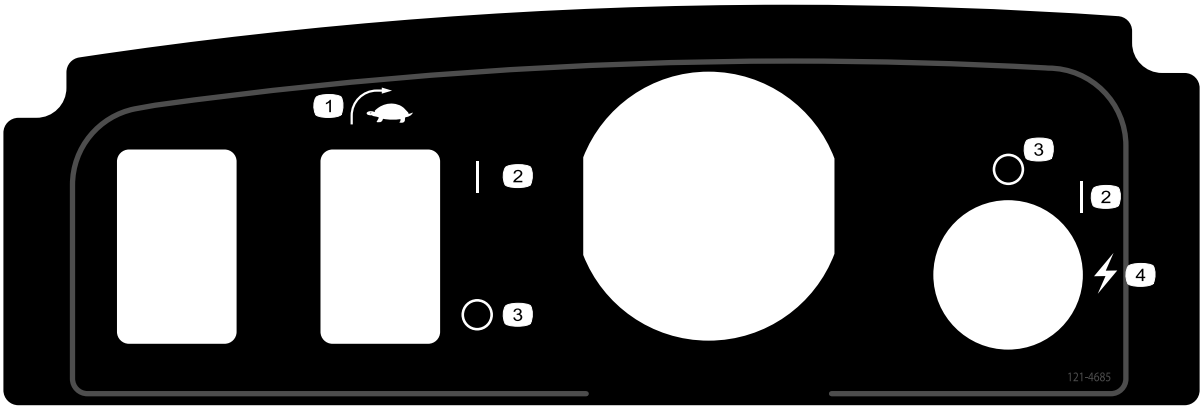

decal121-4685

121–4685

1. EZ-Turn switch
2. On
3. Off
4. Start (machine)

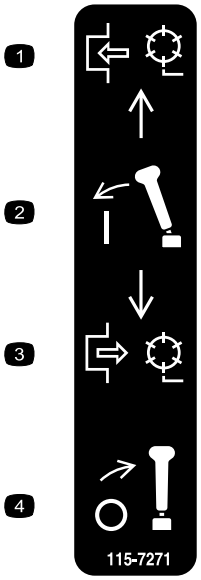

decal115-7271

115-7271

1. Engage the reel.
2. Engage the lever.
3. Disengage the reel.
4. Disengage the lever.



decal119-7523

119-7523

1. Warning—read the *Operator's Manual*.
2. Explosion hazard—no sparks or open flames.
3. Electric shock hazard—do not allow battery posts to short circuit.
4. Warning—do not operate this machine unless you are trained.
5. Warning—do not remove battery cover, do not place in water, do not use a battery with a cracked or damaged housing.
6. Poison hazard—keep children away from the battery.



decal133-8061

133-8061

Setup

Loose Parts

Use the chart below to verify that all parts have been shipped.

Procedure	Description	Qty.	Use
1	Target plate	1	Install the target plate.
2	No parts required	–	Prepare the traction unit (optional).
3	Bolt (3/8 x 3/4 inch)	2	Install the cutting unit to the traction unit.
4	Handle retainer Hairpin cotter	2 2	Install the handle retainers.
5	Battery pack Bolt (5/16 x 1/2 inch) Washer	1 6 6	Install the battery pack.
6	No parts required	–	Adjust the EZ-Turn sensor.
7	Transport wheels—Transport Wheel Kit (Model No. 04123 [Optional])	2	Install the transport wheels.
8	Production-year decal	1	Install the production-year decal
9	Grass basket	1	Install the grass basket.
10	No parts required	–	Break in the machine.

Media and Additional Parts

Description	Qty.	Use
Operator's Manual Certificate of Compliance	1 1	Read or view these materials before operating the machine.

Note: Determine the left and right sides of the machine from the normal operating position.

Note: To install the weight rod onto your machine, refer to the installation instructions in your cutting unit *Operator's Manual*.

1

Installing the Target Plate

Parts needed for this procedure:

1	Target plate

Procedure

1. Prepare the cutting unit as described in the cutting unit *Operator's Manual*.
2. Remove the center, grass-shield bolt (Figure 3).
3. Install the target plate to the top of the cutting unit with the bolt that you previously removed (Figure 3).

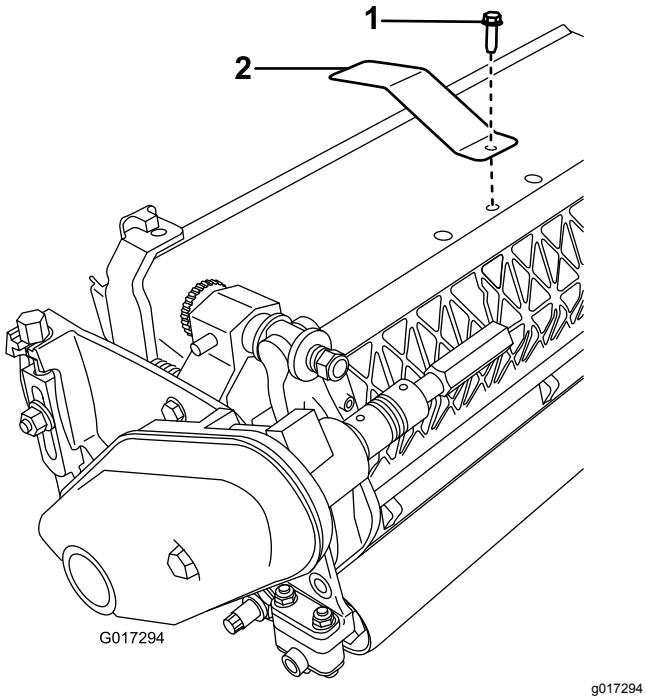

Figure 3

1. Center, grass-shield bolt
2. Target plate

2

Preparing the Traction Unit

Optional—Cutting Unit Models 04251, 02452, 04253, or 04254

No Parts Required

Procedure

If you are installing cutting unit Models 04251, 02452, 04253, or 04254 on this traction unit, complete the following steps:

1. Position the cutting unit on a flat, level surface.
2. On both pitch arms (Figure 4), measure 2.3 mm (0.09 inch) in on the tabs and grind down the corner as shown in Figure 5.

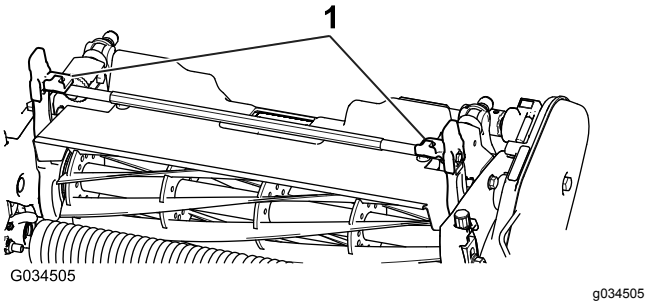

Figure 4

1. Pitch arms

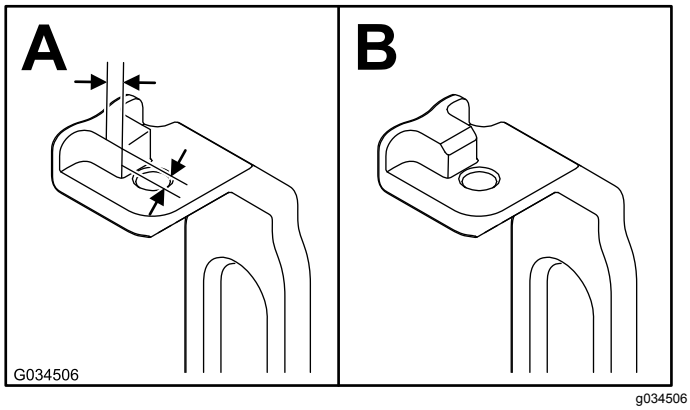

Figure 5

3. Paint the revealed metal to prevent corrosion.

3

Installing the Cutting Unit to the Traction Unit

Parts needed for this procedure:

2	Bolt (3/8 x 3/4 inch)

Procedure

Note: To install the weight rod onto your machine, refer to the installation instructions in your cutting unit *Operator's Manual*.

1. Place the mower on its drums on a level surface.
2. Lower the kickstand and push in the locking pin to lock the kickstand in the SERVICE position (Figure 6). Allow the machine to rest on the locked kickstand.

   Note: Place the kickstand in the SERVICE position whenever you remove the cutting unit. This kickstand position keeps the machine from tipping backward onto the handle.

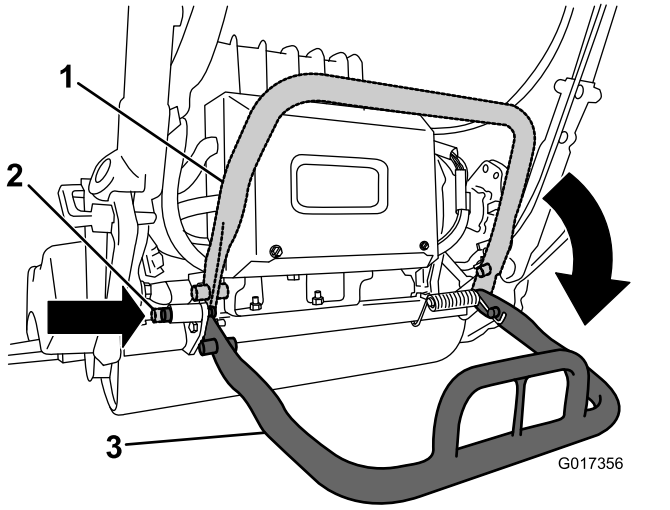

Figure 6

1. Kickstand—STORAGE position
2. Locking pin
3. Kickstand—SERVICE position

3. Push the cutting unit under the traction unit and to the left to engage the transmission coupling (Figure 7).

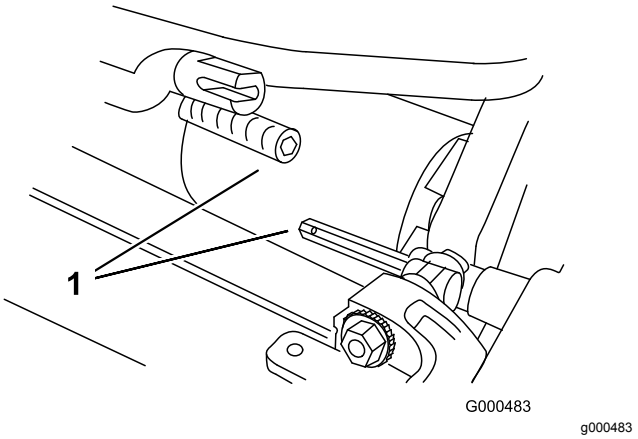

Figure 7

1. Transmission coupling

4. Maneuver the machine frame forward until it engages the cutting unit pivot arms Figure 8.

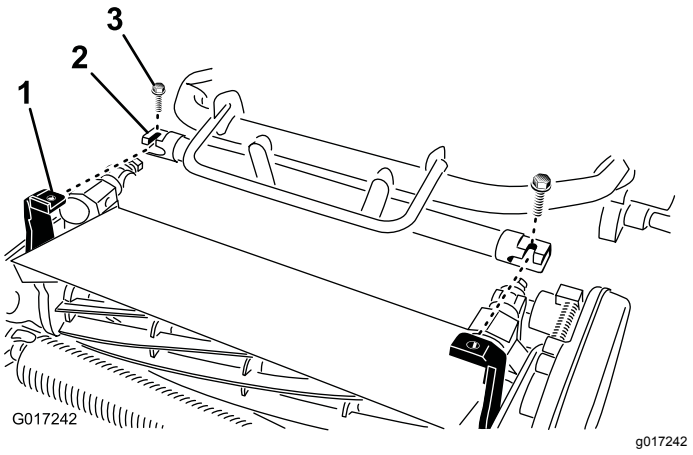

Figure 8

1. Telescoping coupler
2. Cutting-unit hex shaft
3. Bolt

5. Secure the machine frame to the cutting unit pivot arms with the 2 bolts (3/8 x 3/4 inch) (Figure 8).
6. Move the kickstand to the STORAGE position by releasing the locking pin and allowing the kickstand to rotate up.
7. Set the cutting-unit height of cut; refer to your cutting unit *Operator's Manual*.

4

Installing the Handle Retainers

Parts needed for this procedure:

2	Handle retainer
2	Hairpin cotter

Procedure

1. While supporting the handle, remove the cable ties that secure the handle clamps to the side plates (Figure 9).

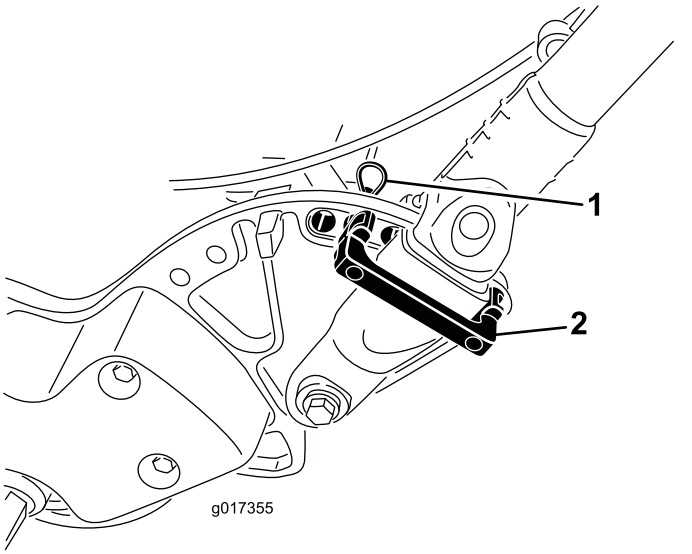

g017355

Figure 9

1. Hairpin cotter
2. Handle retainer

2. Pivot the handle to the desired operating position and insert a handle retainer over the handle clamp and into the matching holes in the side plate (Figure 9).
3. Secure the clamp in position with a hairpin cotter (Figure 9).
4. Repeat the procedure on the opposite side of the handle.
5. Adjust the handle height to the desired position; refer to Adjusting the Handle Height (page 23).

   Note: The machine is shipped with the handle adjusted to the lowest position. The machine is traditionally operated with the handle telescoped out to its maximum height.

5

Installing the Battery Pack

Parts needed for this procedure:

1	Battery pack
6	Bolt (5/16 x 1/2 inch)
6	Washer

Procedure

1. Remove the battery pack from its carton.

   Save the carton and all packing materials. If you need to ship the battery for maintenance, warranty, or recycling, you will need this special packaging.

   Refer to the *Installation Instructions* included with the Battery Shipping Kit (the instructions can be found at www.Toro.com).
2. Cut the cable tie that secures the battery charger to the battery base on the machine and remove the charger.
3. Disconnect the small connector on the pack to the machine wire harness from the main wire harness (Figure 10).

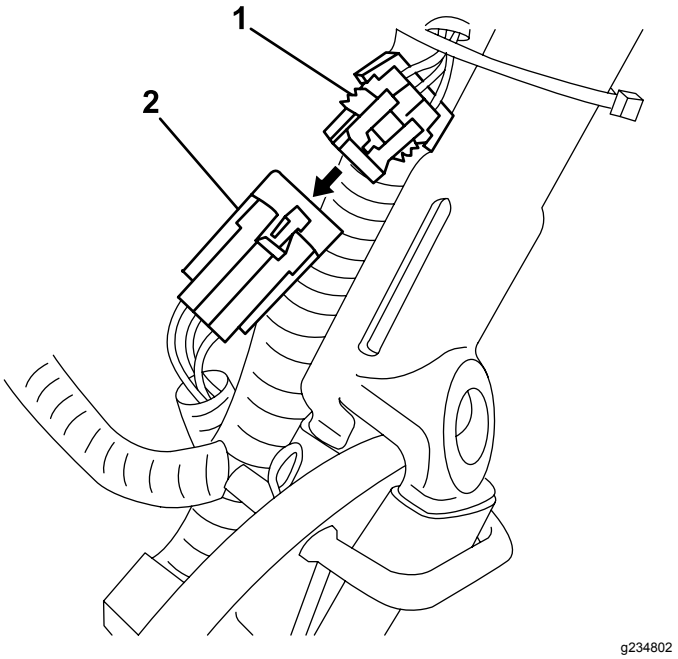

g234802

Figure 10

1. Connector—main wire harness
2. Small connector—battery pack

4. Remove the tall nut that secures the rear of the battery base to the machine frame (Figure 11).

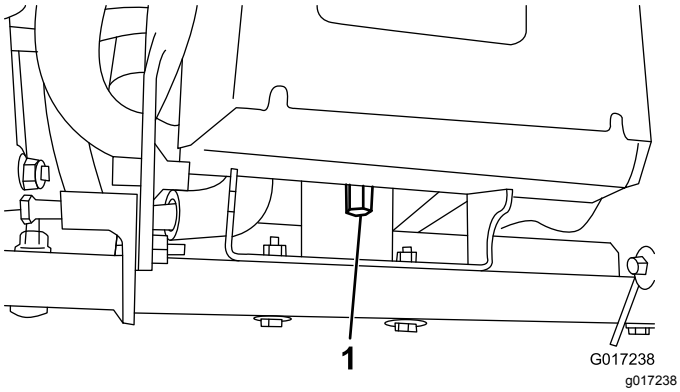

Figure 11

1. Tall nut

5. Loosen the 2 pivot bolts/nuts a half turn each (Figure 12).

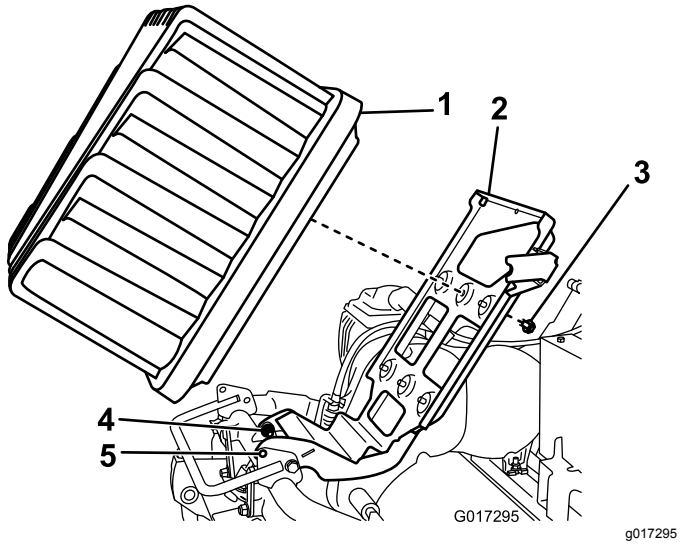

Figure 12

1. Battery pack
2. Battery platform
3. Bolt and washer
4. Pivot bolts
5. Locking holes

6. Raise the battery platform until the locking holes in the base and frame align (Figure 12).

   Note: Slide a screwdriver or other steel rod through the holes to hold the platform in the raised position.

7. Place the battery pack on the base with the connector port toward the rear of the machine.

8. Secure the battery pack to the base with the 6 bolts (5/16 x 1/2 inch) and 6 washers.

   Note: Torque each bolt to 11.3 to 14 N·m (100 to 130 in-lb).

9. Line up the tabs on the inside of the harness power plug with the slots in the battery pack receptacle.

   Note: Press the harness connector into the battery connector (Figure 13 and Figure 14).

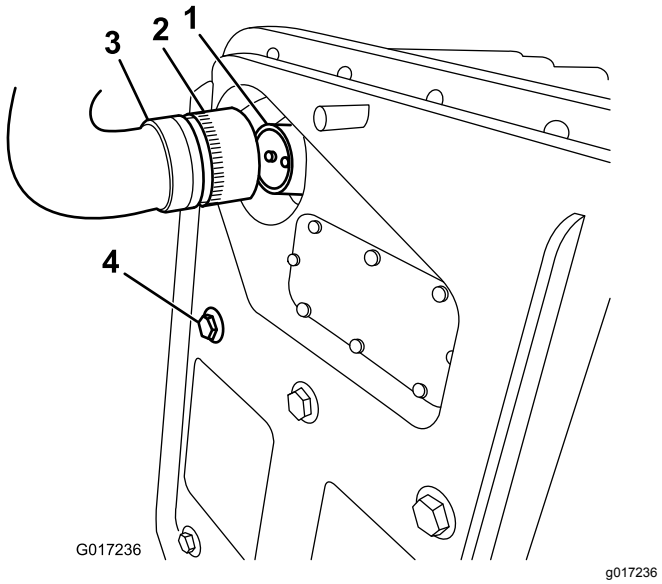

Figure 13

1. Battery-pack receptacle
2. Locking collar
3. Pack the machine to the wire-harness plug
4. Bolt securing the battery pack

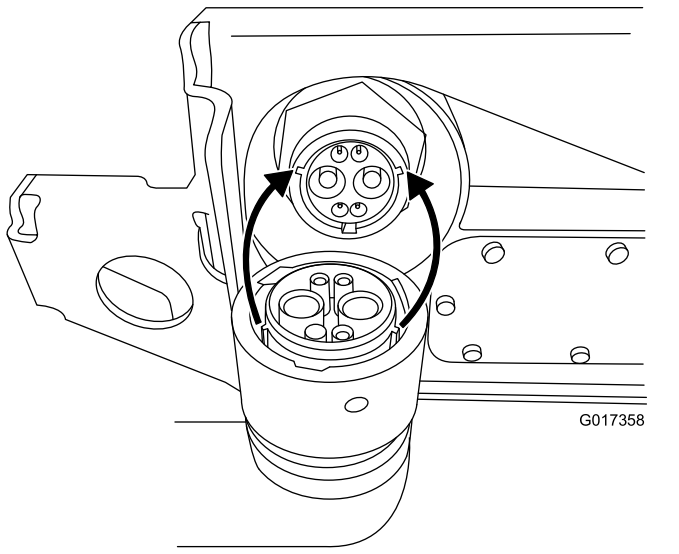

Figure 14

10. Rotate the locking collar on the harness plug clockwise until it engages with the battery receptacle and begins to pull in toward the battery.

    Note: Continue turning it another 120° (1/3 of a turn) until it fully seats.

    Note: If you cannot mate the battery pack receptacle with the machine wire harness plug while the battery pack is installed, you can instead connect the harness to the battery pack

and then install the battery pack. Remove the main power supply connector (Figure 16) from the battery base. Install the connector to the battery as described. Install the battery to the base, threading the attached wire harness through the appropriate hole, and then secure the main power supply connector to the battery base with the fasteners that you previously removed.

11. Remove the screwdriver holding the battery base in the up position, and gently lower the battery platform to the machine frame.

    Important: **Do not pinch the wire harness between the frame and platform.**

12. Secure the battery platform to the machine frame with the tall nut removed in step 4.
13. Tighten the pivot fasteners loosened in step 5.
14. Route the pack to machine wire harness under and behind the main harness on the left side of the machine and connect the small 6-pin connector on the harness to the matching connector on the main wire harness as shown in Figure 15.

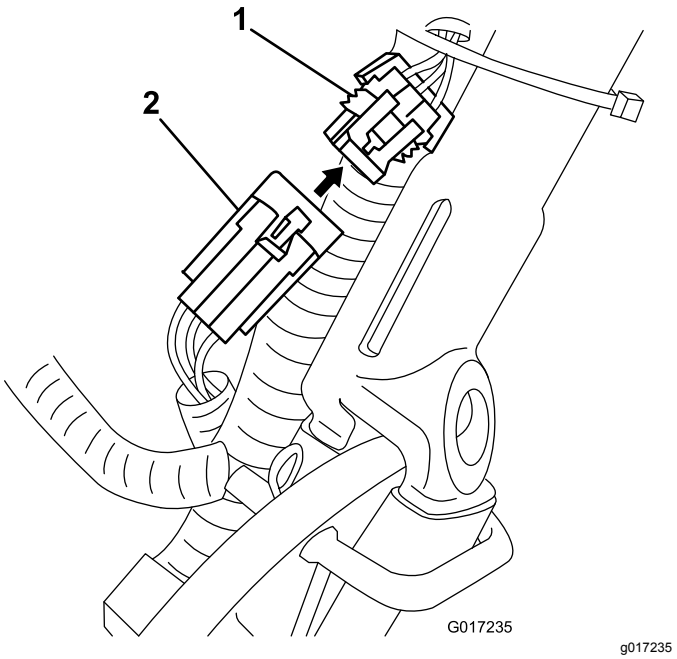

Figure 15

1. Connector—main wire harness
2. Small connector—battery pack

15. Turn on and turn off the machine to ensure that the battery charges completely.
16. Connect the T-handle connector from the main wire harness to the main power supply connector on the battery base (Figure 16).

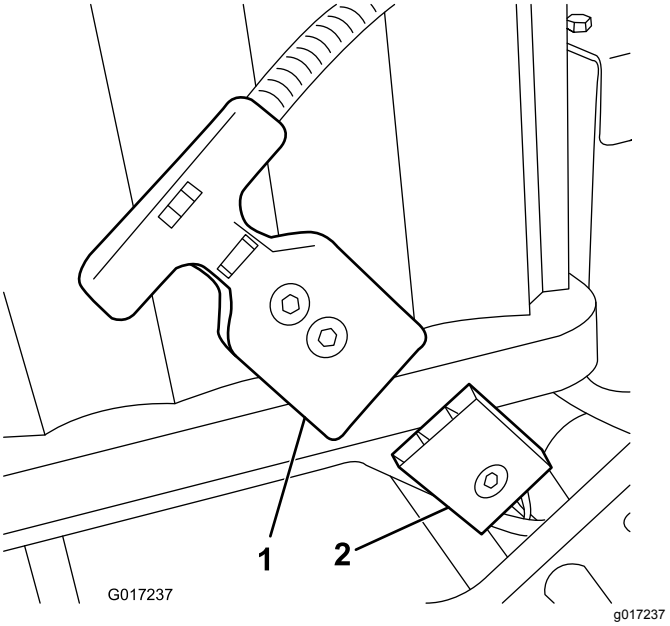

Figure 16

1. T-handle connector
2. Main power supply connector on the battery platform

17. Charge the battery; refer to the lithium battery charger *Operator's Manual*.

    Note: The battery is shipped with a partial charge (approximately 40%). This is enough charge for you to perform functional checks on the machine and move it as necessary to complete setup, but you should fully charge the battery before you use the machine.

6

Adjusting the EZ-Turn Sensor

No Parts Required

Procedure

1. Ensure that the machine is on a flat, level surface with the traction drum on the ground.
2. Loosen the jam nuts on the sensor and adjust the sensor so that 1 thread is visible past the lower jam nut (Figure 17).

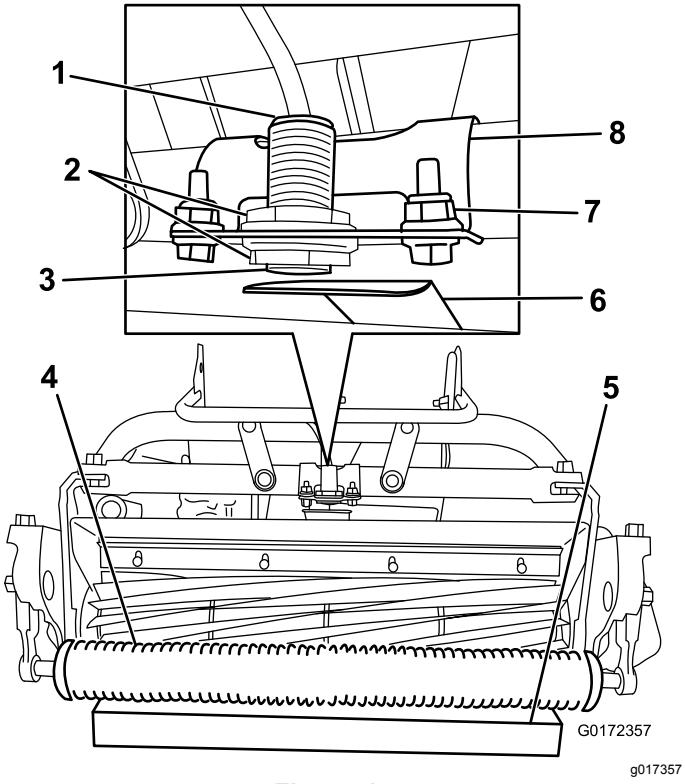

Figure 17

1. Sensor light (on top)
2. Jam nuts
3. EZ-Turn sensor
4. Roller
5. 3.8 cm (1-1/2 inches) block
6. Target plate
7. Bracket fasteners
8. Sensor bracket

3. Tighten the jam nuts to secure the sensor.
4. Place a 3.8 cm (1-1/2 inches) block under the front cutting unit roller (Figure 17).
5. Loosen the fasteners that secure the sensor bracket to the frame (Figure 17).
6. Start the machine; refer to Starting the Machine (page 26).
7. Set the EZ-Turn switch to the ON position.
8. Rotate the sensor bracket toward the target plate until the light on top of the sensor illuminates (Figure 17). If the light was already illuminated, rotate it away from the target plate until it goes out and then reverse direction until it illuminates again.
9. Tighten the bracket fasteners.
10. Remove the block from under the roller and place the machine on the kickstand.
11. Ensure that the target plate does not contact the grass shield.

    Note: If the plate does contact the shield, loosen the bracket fasteners and rotate the switch up until the plate is no longer touching the shield.
12. Turn off the machine.

7

Installing the Transport Wheels

Optional

Parts needed for this procedure:

2	Transport wheels—Transport Wheel Kit (Model No. 04123 [Optional])

Procedure

1. Use your foot to push the center of the kickstand down and pull up on the lower handle support until the kickstand has rotated forward and over center (Figure 18).

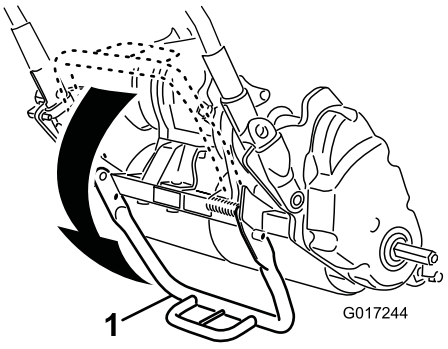

Figure 18

1. Kickstand

2. Press the wheel locking clip toward the center of wheel and slide the wheel onto the hex shaft (Figure 19).

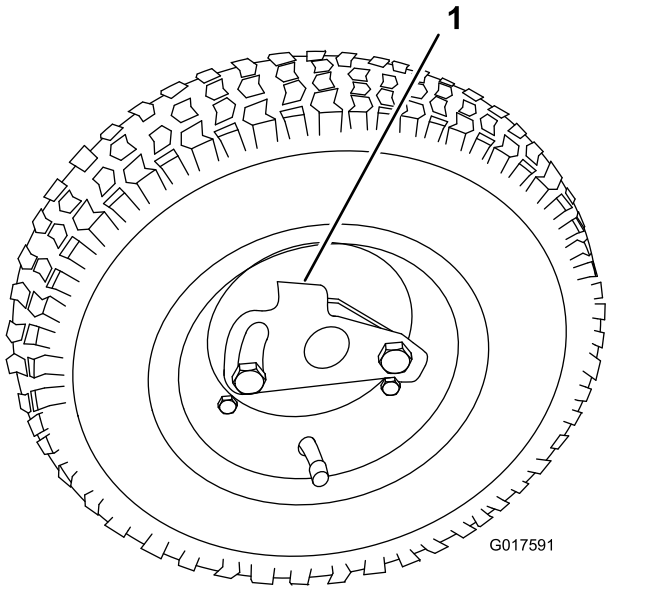

Figure 19

1. Locking clip

3. Rotate the wheel back and forth until it fits onto the axle and the locking clip is secured in the groove on the axle shaft.
4. Repeat the procedure on the opposite side of the machine.
5. Inflate the tires to 83 to 103 kPa (12 to 15 psi).
6. Carefully lower the machine off of the kickstand by pushing forward slowly or by lifting the lower handle support, allowing the kickstand to spring back to the STORAGE position.

8

Installing the Production-Year Decal

CE Machines Only

Parts needed for this procedure:

1	Production-year decal

Procedure

If you use this machine in a country that complies to CE standards, apply the production-year decal near the serial plate; refer to Figure 20.

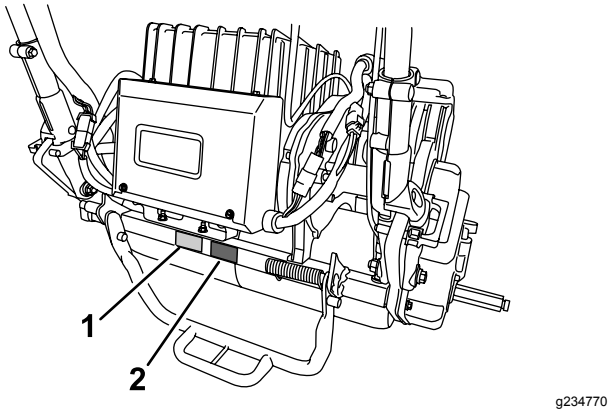

Figure 20

1. Serial plate
2. Production-year decal

9

Installing the Grass Basket

Parts needed for this procedure:

1	Grass basket

Procedure

1. Grasp the basket by the handle.
2. Guide the basket lip between the cutting unit side plates and over the front roller (Figure 21).

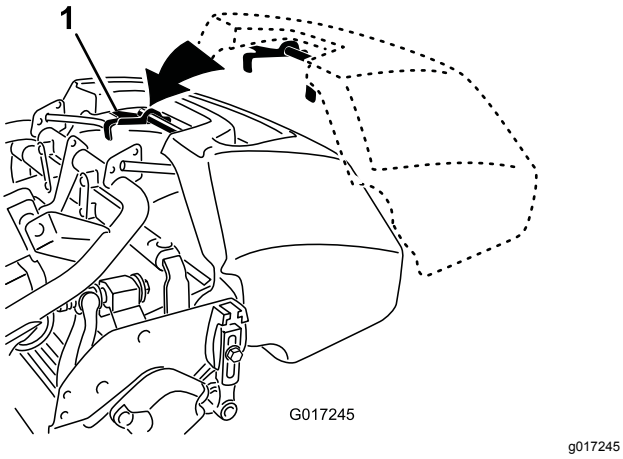

Figure 21

1. Basket hooks

3. Install the basket hooks over the frame loop (Figure 21).

Important: **If you ever drop the basket, examine the pitch-arm contact points near the lower lip of the basket for damage (Figure 22). Straighten them before using the basket.**

Using the basket with bent pitch-arm contact points may cause contact between the basket and cutting unit, causing undesired noise and/or damage to the basket and cutting unit.

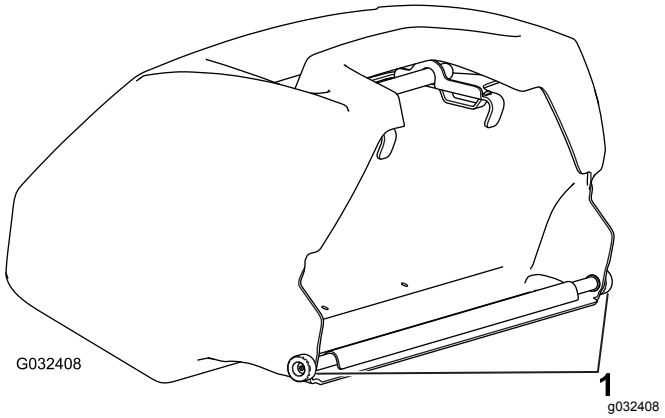

Figure 22

1. Pitch-arm contact point

10

Breaking in the Machine

No Parts Required

Procedure

Only 8 hours of mowing operation is required for the break-in period.

Since the first hours of operation are critical to future dependability of the machine, monitor the machine functions and performance closely so that minor difficulties, which could lead to major problems, are noted and can be corrected. Inspect the machine frequently during break-in for signs of loose fasteners or any other malfunction.

Product Overview

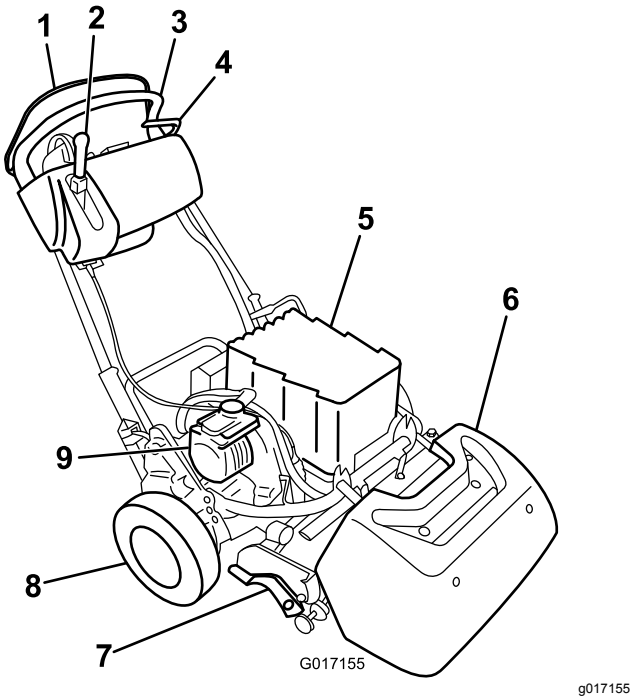

g017155

Figure 23

1. Operator-presence control
2. Traction and reel drive engagement lever
3. Handle
4. Service brake
5. Battery pack
6. Grass basket
7. Cutting unit
8. Transport wheels
9. Electric motor

Controls

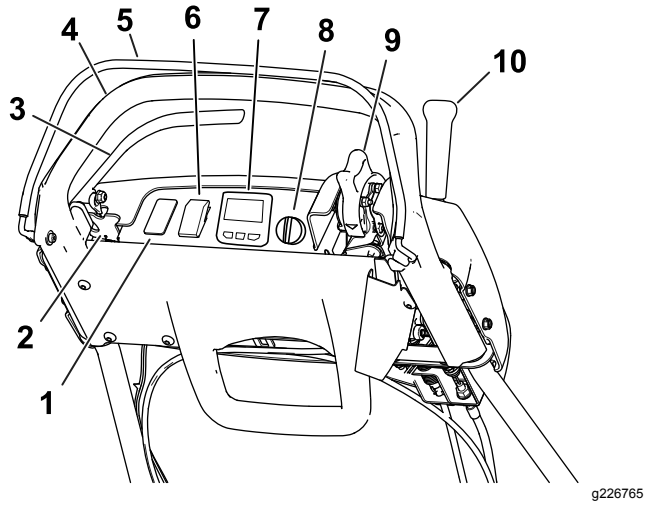

g226765

Figure 24

1. Open space for optional lights
2. Parking-brake latch
3. Service brake
4. Handle
5. Operator-presence control
6. EZ-Turn switch
7. InfoCenter LCD display
8. Key switch
9. Speed control
10. Traction and reel-drive engagement lever

EZ-Turn Switch

The EZ-Turn switch (Figure 24) enables or disables the EZ-Turn feature. The EZ-Turn feature automatically slows the machine whenever you raise the cutting unit off the ground during mowing. This allows you to make the turns at the end of each mowing pass at a slower speed. You can use the switch at any time, even while mowing.

This feature only reduces the ground speed when the reel is engaged and lifted off the ground. It has no effect on ground speed when the reel is disengaged. If this feature is activated while mowing and you turn off the reel, the machine will speed up. If you are mowing at a slow speed already, the EZ-Turn feature will not slow the machine on a turn.

Service Brake

The service brake (Figure 25) is located on the left front side of the handle. Pulling back the lever applies the service brake.

You must disengage the brake before you engage the traction drive. If you operate the machine with the brake engaged, the machine moves, but with a high resistance and increased power consumption.

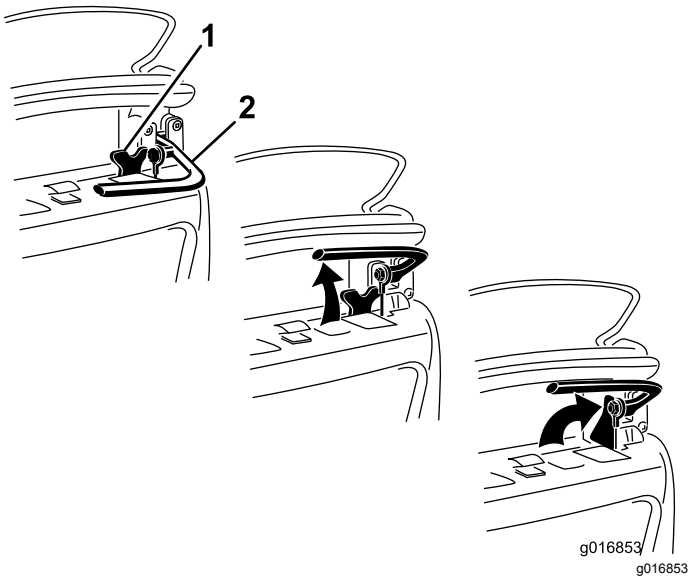

Figure 25

1. Parking-brake latch
2. Service brake

Parking-Brake Latch

Use the parking-brake latch (Figure 25) with the service brake. Rotate the parking-brake latch toward the brake handle to hold the service brake in place. Pull the brake lever to release.

Note: You cannot move the traction-control lever while the latch is engaged.

Operator-Presence Control (OPC)

You must engage the operator-presence control (Figure 24) before you engage the traction lever. If you release the OPC during operation, the traction lever returns to neutral and the engine continues to run.

InfoCenter LCD Display

The InfoCenter LCD display shows information about your machine and battery pack, such as the current battery charge, speed, diagnostics information, and more (Figure 24).

For more information, refer to Using the InfoCenter LCD Display (page 27).

Key Switch

The key switch (Figure 24) has 3 positions: OFF, RUN, and START. With the brake off and the traction drive disengaged, move the switch to the START position until the InfoCenter display lights up, then release it to the RUN position. Turn it to the OFF position and remove the key to turn off the machine.

Speed Control

The speed control (Figure 24 and Figure 26) is located on the right, rear side of the control panel. Rotate the throttle to regulate the engine speed.

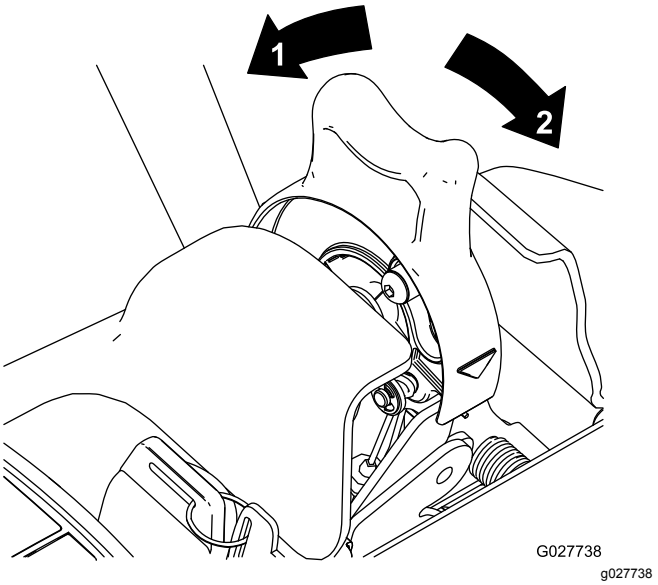

Figure 26

1. FAST position
2. SLOW position

Traction and Reel-Drive Engagement Lever

The traction and reel-drive engagement lever (Figure 27) is located on the front right side of the control panel.

To transport the machine, the lever has 2 positions: NEUTRAL and FORWARD. Pushing the lever to the traction—FORWARD (transport) position or the traction—FORWARD and reel drive—ENGAGE position engages the traction drive (Figure 27).

Note: To move the lever, you must first engage the operator-presence control.

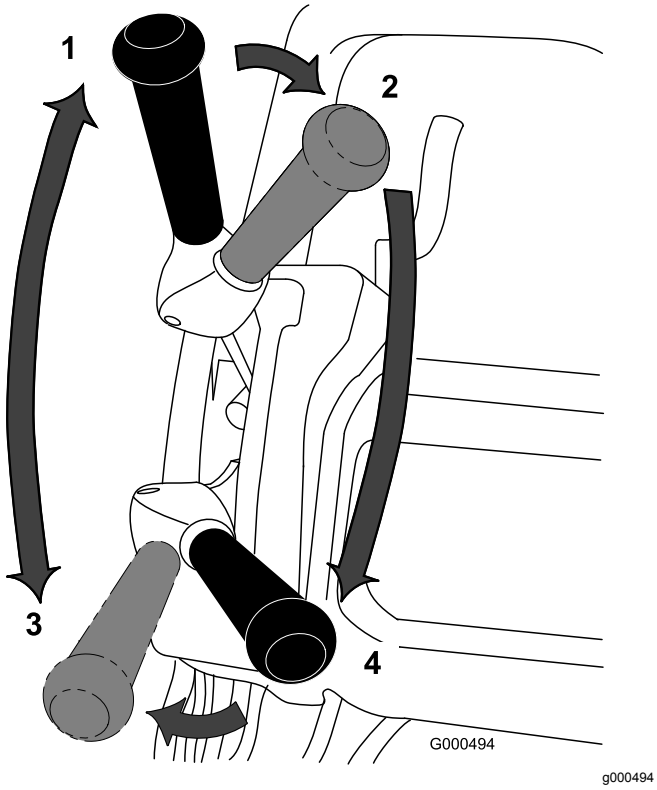

g000494

Figure 27

1. NEUTRAL
2. Traction—NEUTRAL and reel drive—DISENGAGE
3. Traction—FORWARD (transport)
4. Traction—FORWARD and reel drive—ENGAGE

To operate the reel, the lever has 2 positions: ENGAGE and DISENGAGE. Move the top of the lever to the left, then forward to the traction—FORWARD and reel drive—ENGAGE position to engage the reel and begin mowing. Push the lever to the right to the traction—FORWARD (transport) position to disengage the reel and continue forward motion or pull back on it to the traction—NEUTRAL and reel drive—DISENGAGE position to disengage both the reel and the traction drive (Figure 27).

Note: If you release the operator-presence control, the lever returns to neutral and the machine stops.

Automatic-Motor Brake

The machine is equipped with an automatic-motor brake that prevents it from rolling when the machine is shut off. The motor brake is on whenever the traction drive is in the NEUTRAL position or you move the speed control to the ZERO position, except in the following circumstances:

- When the machine is turned off, use the parking-brake latch to ensure that the service brake is consistently engaged.
- When you start the machine with the key switch, the motor brake is initially disengaged. After driving the machine, the motor brake functions normally.
- If you move the speed control to zero speed while the reels are engaged (i.e., while mowing), the brake does not engage. This feature allows you to move to the speed control to the ZERO position while mowing and pull the machine rearward to make course corrections.

Kickstand

The kickstand (Figure 29) is mounted to the rear of the machine. Use the kickstand when you install or remove the transport wheels or the cutting unit.

- To use the kickstand to install the transport wheels, lower the kickstand to the ground and step down on the loop while pulling up and back on the lower-center handle (Figure 28).

⚠ CAUTION

The machine is heavy and can cause back strain if lifted improperly.

Put your foot pressure down on the kickstand loop and use only the lower-center handle to raise the machine. Attempting to raise the machine onto the kickstand any other way can cause injury.

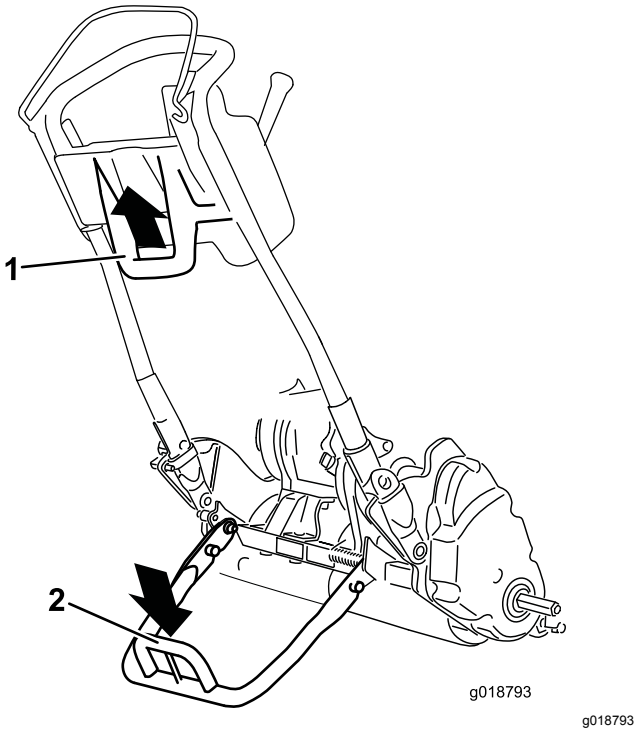

g018793

Figure 28

1. Lower-center handle
2. Kickstand loop

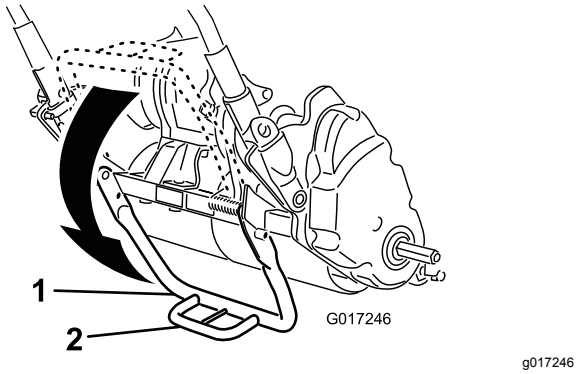

g017246

Figure 29

1. Kickstand
2. Kickstand loop

- To prevent the machine from tipping backward when removing the reel, lower the kickstand and push in the locking pin to lock it in the SERVICE position (Figure 30).

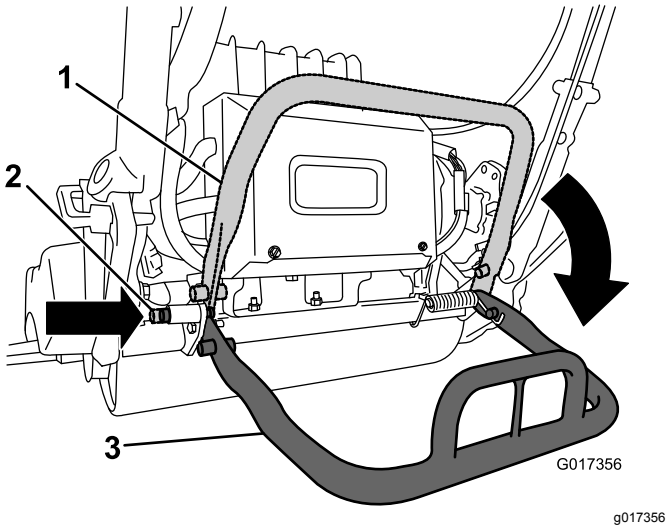

g017356

Figure 30

1. Kickstand—STORAGE position
2. Locking pin
3. Kickstand—SERVICE position

Specifications

Note: Specifications and design are subject to change without notice.

1820 Traction Unit

Width	82.5 cm (32–1/2 inches)
Height	104.8 cm (41–1/4 inches)
Length with basket	152.4 cm (60 inches)
Net Weight (with 11 blade cutting unit and grass basket installed)	129.3 kg (285 lb)
Width of cut	46 cm (18 inches)
Height of cut	1.5 to 7.5 mm (1/16 to 19/64 inches) with Micro-Cut bedknife
Clip frequency	Adjustable (Refer to Cutting Unit *Operator's Manual*)

2120 Traction Unit

Width	90.1 cm (35–1/2 inches)
Height	104.8 cm (41–1/4 inches)
Length with basket	152.4 cm (60 inches)
Net Weight (with 11 blade cutting unit and grass basket installed)	132.9 kg (293 lb)
Width of cut	53.3 cm (21 inches)
Height of cut	1.5 to 7.5 mm (1/16 to 19/64 inches) with Micro-Cut bedknife
Clip frequency	Adjustable (Refer to the Cutting Unit *Operator's Manual*)

Attachments/Accessories

A selection of Toro approved attachments and accessories is available for use with the machine to enhance and expand its capabilities. Contact your Authorized Service Dealer or authorized Toro distributor or go to www.Toro.com for a list of all approved attachments and accessories.

To ensure optimum performance and continued safety certification of the machine, use only genuine Toro replacement parts and accessories. Replacement parts and accessories made by other manufacturers could be dangerous, and such use could void the product warranty.

Operation

Note: Determine the left and right sides of the machine from the normal operating position.

Before Operation

Before Operation Safety

General Safety

- Never allow children or untrained people to operate or service the machine. Local regulations may restrict the age of the operator. The owner is responsible for training all operators and mechanics.
- Become familiar with the safe operation of the equipment, operator controls, and safety signs. Know how to shut off the machine quickly.
- Check that operator-presence controls, safety switches, and shields are attached and functioning properly. Do not operate the machine unless they are functioning properly.
- Inspect the area where you will use the machine, and remove all objects that could interfere with the operation of the machine or that the machine could throw.
- Evaluate the terrain to determine what accessories and attachments are needed to properly and safely perform the job.

Performing Daily Maintenance

Perform the daily maintenance procedures; refer to Maintenance (page 32).

Setting the Machine to Match Turf Conditions

Use the following table to set the machine to match turf conditions.

Bedbars: Standard and Optional (Flex/eFlex 2120 Machines)			
Part Number	**Description**	**Aggressiveness**	**Comments**
106-2468-01	Non-Aggressive	Less	Red, Standard
99-3794-03	Aggressive	More	Black
Bedbars: Standard and Optional (Flex/eFlex 1820 Machines)			
110-2282-01	Non-Aggressive	Less	Red, Standard
110-2281-03	Aggressive	More	Black

Bedknives: Standard and Optional (Flex/eFlex 2120 Machines)			
Part Number	**Description**	**Height-of-cut Range**	**Comments**
115-1880	Microcut-EdgeMax	1.6 to 3.2 mm (0.062 to 0.125 inch)	Standard
93-4262	Microcut	1.6 to 3.2 mm (0.062 to 0.125 inch)	
108-4303	Extended Microcut	1.6 to 3.2 mm (0.062 to 0.125 inch)	Less aggressive
115-1881	Tournament- EdgeMax	3.2 to 6.4 mm (0.125 to 0.25 inch)	
93-4263	Tournament	3.2 to 6.4 mm (0.125 to 0.25 inch)	
108-4302	Extended Tournament	3.2 to 6.4 mm (0.125 to 0.25 inch)	Less aggressive
93-4264	Low Cut	6.4 mm (0.25 inch) and up	
Bedknives: Standard and Optional (Flex/eFlex 1820 Machines)			
117-1530	Microcut-EdgeMax	1.6 to 3.2 mm (0.062 to 0.125 inch)	Standard
98-7261	Microcut	1.6 to 3.2 mm (0.062 to 0.125 inch)	
110-2300	Extended Microcut	1.6 to 3.2 mm (0.062 to 0.125 inch)	Less aggressive
98-7260	Tournament	3.2 to 6.4 mm (0.125 to 0.25 inch)	
117-1532	Tournament- EdgeMax	3.2 to 6.4 mm (0.125 to 0.25 inch)	
110-2301	Low Cut	6.4 mm (0.25 inch) and up	

Rollers (Flex/eFlex 2120 Machines)			
Part Number	**Description**	**Diameter/Material**	**Comments**
04255	Narrow Wiehle	6.4 cm (2.5 inches)/Aluminum	Narrow spaced grooves
04256	Wide Wiehle	6.4 cm (2.5 inches)/Aluminum	More penetration, wide spaced grooves
04257	Full Roller	6.4 cm (2.5 inches)/Steel	Least penetration
04258	Narrow Wiehle—Long	6.4 cm (2.5 inches)/Aluminum	More edge support; 4.3 cm (1.7 inches) longer
04267	Paspalum	6.4 cm (2.5 inches)/Aluminum	Less penetration, softened narrow spaced grooves
115-7356	Rear Roller	5.1 cm (2.0 inches)/Aluminum	Standard rear
120-9595	Rear Roller	5.1 cm (2.0 inches)/Steel	Steel rear
Rollers (Flex/eFlex 1820 Machines)			
120-9607	Narrow Wiehle	6.4 cm (2.5 inches)/Aluminum	Narrow spaced grooves
120-9609	Wide Wiehle	6.4 cm (2.5 inches)/Aluminum	More penetration, wide spaced grooves
120-9611	Full Roller	6.4 cm (2.5 inches)/Steel	Least penetration
121-4681	Narrow Wiehle—Long	6.4 cm (2.5 inches)/Aluminum	More edge support; 4.3 cm (1.7 inches) longer
120-9605	Rear Roller	5.1 cm (2.0 inches)/Aluminum	Standard rear

Adjusting the Handle Height

Note: The machine is shipped with the handle adjusted to the lowest position. The machine is normally operated with the handle telescoped out to its maximum height.

1. Loosen the 3 carriage bolts and nuts securing each side of the handle in the handle clamps (Figure 31).

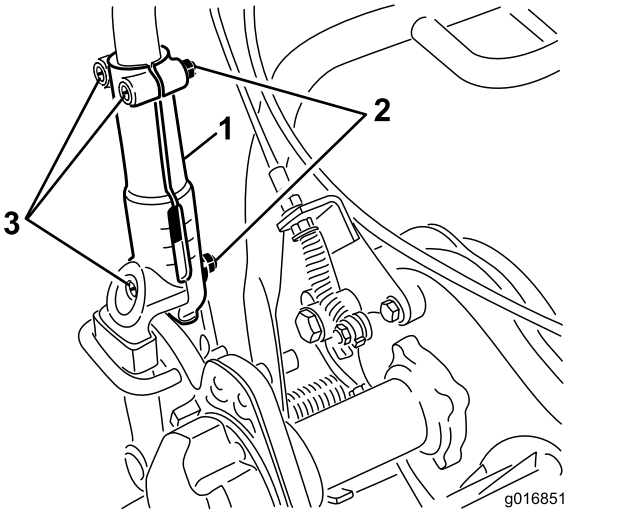

g016851

Figure 31

1. Handle clamp
2. Nut
3. Carriage bolts

2. Pull up on the handle slowly and evenly on each side until it is in the desired operating position.
3. Tighten the carriage bolts and nuts to lock the adjustment.

Adjusting the Handle Angle

1. Remove the hairpin cotters from the handle retainers on each side of the machine (Figure 32).

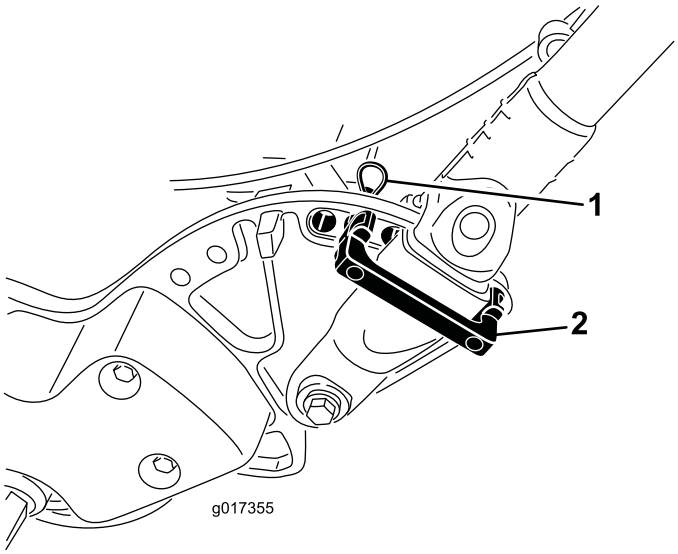

g017355

Figure 32

1. Hairpin cotter
2. Handle retainer

2. While supporting the handle, remove the hairpin cotters from each side and pivot the handle to the desired operating position (Figure 32).
3. Install the handle retainers and hairpin cotters.

Adjusting the Throttle Control

1. Remove the console cover.
2. Loosen the 2 fasteners securing the throttle control (Figure 33).

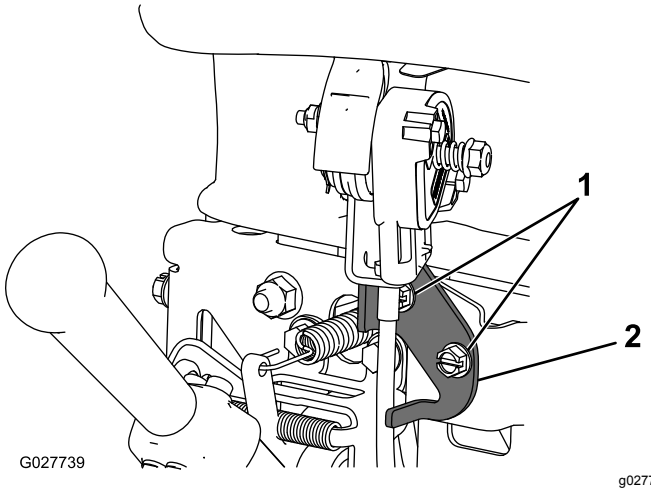

g027739

Figure 33

1. Fasteners
2. Throttle control

3. Adjust the throttle control to the desired position.
4. Tighten the throttle-control fasteners.
5. Install the previously removed console cover.

Checking the Operation of the Interlock Switches

Service Interval: Before each use or daily

⚠ CAUTION

If the safety interlock switches are disconnected or damaged the machine could operate unexpectedly causing personal injury.

- **Do not tamper with the interlock switches.**
- **Check the operation of the interlock switches daily and replace any damaged switches before operating the machine.**

Checking the Operator-Presence Control (OPC) Interlock

1. Push the kickstand down with your foot and pull up on the handle support until the kickstand has rotated forward, over center.
2. Start the machine.
3. With the OPC released, attempt to engage the traction lever (Figure 34). The traction lever should not engage. If the traction lever engages, the interlock system needs service. Correct the problem before operating the machine; refer to Servicing the Traction Interlock Switch (page 36).

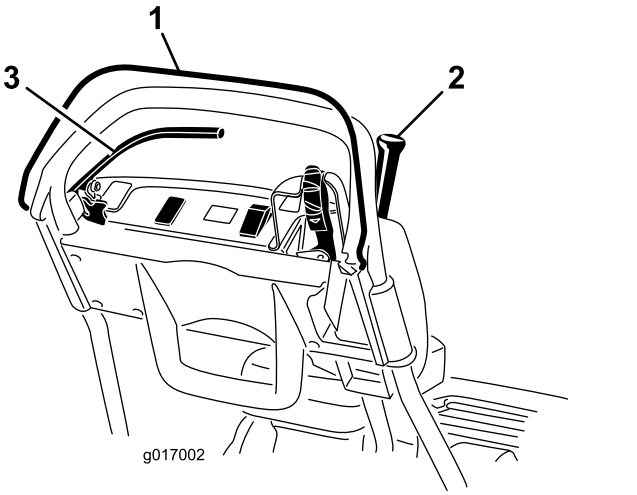

g017002

Figure 34

1. Operator-presence control (OPC)
2. Traction lever
3. Brake lever

4. With the OPC pressed and the traction lever engaged, release the OPC (Figure 34). The traction lever should disengage. If the traction lever does not disengage, the interlock system needs service. Correct the problem before operating the machine. Refer to Servicing the Traction Interlock Switch (page 36).
5. With the OPC pressed and the shift lever moved to the left, engage the traction and reel drive, release the OPC (Figure 34). The traction lever should disengage. If the traction lever does not disengage, the interlock system needs service. Correct the problem before operating the machine; refer to Servicing the Traction Interlock Switch (page 36) or Adjusting the Reel Control (page 40).
6. With the OPC pressed and the shift lever moved to the left, engage the traction and reel drive. Move the shift lever to the right to disengage the reel drive (Figure 23). The reel drive should disengage. If the reel drive does not disengage, the interlock system needs service. Correct the problem before operating the machine; refer to Servicing the Traction Interlock Switch (page 36).
7. Carefully lower the machine off the kickstand.

Checking the Traction-Interlock Switch

1. Ensure that the kickstand is down.
2. Press the OPC and engage the traction lever (Figure 23)
3. Use the key switch to start the machine. The InfoCenter LCD display lights up and display a message warning that the traction lever is engaged. If this warning does not appear, the interlock switch needs service. Correct the problem before operating the machine; refer to Servicing the Traction Interlock Switch (page 36).
4. Turn off the machine and return the traction lever to the NEUTRAL position.

Checking the Brake-Interlock Switch

1. Ensure that the kickstand is down.
2. With the machine on and the service brake engaged (not the parking–brake latch) with moderate force, press the OPC and engage the traction lever (Figure 23). The motor should labor to overcome the brake without producing errors on the InfoCenter LCD display. It may display a high power consumption advisory (smaller battery with a lightning bolt). If you get any other advisory, correct the problem before operating the machine.

3. With the machine on, engage the parking-brake latch, press the OPC, and engage the traction lever (Figure 23 and Figure 24). The motor should not run and you should get an advisory on the InfoCenter panel. If not, the interlock switch needs service. Correct the problem before operating the machine; refer to Servicing the Brake-Interlock Switch (page 37).
4. Turn off the machine and return the traction lever to the NEUTRAL position.
5. Carefully lower the machine off the kickstand.

Transporting the Machine to a Job Site

Transporting the Machine a Short Distance

Use the transport wheels to transport the machine a shorter distance.

1. Install the transport wheels; refer to 7 Installing the Transport Wheels (page 14)
2. Ensure that the traction and reel-drive lever is in the NEUTRAL position.
3. Ensure that the speed control is set to ZERO.
4. Start the machine; refer to Starting the Machine (page 26)
5. Tip the front of the machine up, gradually move the traction control to the FORWARD position, and use the speed control to slowly increase the machine speed.
6. Adjust the speed control to operate the mower at the desired ground speed and transport the machine to the desired destination.

Transporting the Machine a Considerable Distance

Use a trailer to transport the machine a considerable distance. Use caution while loading and unloading the machine onto the trailer.

1. Carefully drive the machine onto the trailer.
2. Shut off the machine, engage the service brake, and use the parking-brake latch to hold the service brake in place.
3. Securely fasten the machine to the trailer.

Note: You can use the Toro Trans Pro trailer to transport the machine. For instructions on loading the trailer, refer to your trailer *Operator's Manual*.

Important: **Ensure that the machine is shut off while you transport it on a trailer, as damage can occur to the machine if it is on during transportation.**

During Operation

During Operation Safety

General Safety

- The owner/operator can prevent and is responsible for accidents that may cause personal injury or property damage.
- Wear appropriate clothing, including eye protection; long pants; slip-resistant, substantial footwear; and hearing protection. Tie back long hair, secure loose clothing, and do not wear loose jewelry.
- Use your full attention while operating the machine. Do not engage in any activity that causes distractions; otherwise, injury or property damage may occur.
- Do not operate the machine while ill, tired, or under the influence of alcohol or drugs. Keep bystanders, especially small children, out of the operating area. Shut off the machine if anyone enters the area.
- Operate the machine only in good visibility and appropriate weather conditions. Do not operate the machine when there is the risk of lightning.
- Before you start the machine, disengage all blade-attachment clutches, shift into neutral, and engage the parking brake.
- Watch for holes, ruts, bumps, rocks, or other hidden objects. Uneven terrain could cause a slip-and-fall accident.
- Use extreme care when approaching blind corners, shrubs, trees, or other objects that may block your view.
- Always stand in the operating position (behind the handle) when starting and operating the machine.
- Ensure that the grass basket is in place while mowing. Shut off the machine before emptying the basket.
- Never leave a running machine unattended.
- Do not tip the machine more than 25°.
- Shut off the machine, disengage the drive to the cutting unit, and remove the key in the following situations:
  - Before fueling
  - Before clearing blockages
  - Before removing the grass basket

  - Before checking, cleaning, or maintaining the cutting unit
  - After striking a foreign object or if an abnormal vibration occurs. Inspect the cutting unit for damage and make repairs before starting and operating the machine
  - Before leaving the operating position
- Disengage the drive to the cutting unit when transporting or not using the machine.
- Watch out for traffic when crossing or near roadways.
- Stop the blades whenever you are not mowing.
- Use accessories and attachments approved by The Toro® Company only.

Slope Safety

- Slopes are a major factor related to loss of control and rollover accidents, which can result in severe injury or death. The operator is responsible for safe slope operation. Operating the machine on any slope requires extra caution.
- Evaluate the site conditions to determine if the slope is safe for machine operation including surveying the site. Always use common sense and good judgment when performing this survey.
- Review the slope instructions, listed below, for operating the machine on slopes and review the conditions to determine whether you can operate the machine in the conditions on that day and at that site. Changes in the terrain can result in a change in slope operation for the machine.
  - Avoid starting, stopping, or turning the machine on slopes. Avoid making sudden changes in speed or direction. Make turns slowly and gradually.
  - Do not operate a machine under any conditions where traction, steering, or stability is in question.
  - Remove or mark obstructions such as ditches, holes, ruts, bumps, rocks, or other hidden hazards. Tall grass can hide obstructions. Uneven terrain could overturn the machine.
  - Be aware that operating the machine on wet grass, across slopes, or downhill may cause the machine to lose traction. Loss of traction may result in sliding and a loss of braking and steering.
  - Use extreme caution when operating the machine near dropoffs, ditches, embankments, water hazards, or other hazards. The machine could suddenly roll over if part of the traction goes over the edge or the edge caves in. Establish a safety area between the machine and any hazard.
  - Identify hazards at the base of the slope.

Starting the Machine

1. Ensure that the T-handle connector on the main wire harness is connected to the main power supply connector; refer to Figure 16.
2. Ensure that the traction and reel drive lever is in the NEUTRAL position; refer to Figure 38.
3. Insert the key into the key switch, turn the switch to the START position and hold it until the InfoCenter LCD display lights up, then release it to the RUN position.

Shutting Off the Machine

1. Move the traction and reel drive lever to the NEUTRAL position.
2. Turn the key switch to the OFF position and remove the key.

Releasing the Transmission

If the machine becomes disabled with the motor brake on, you can disengage the drum from the transmission to allow the machine to be maneuvered.

1. On the right rear corner of the machine, locate the traction engage/disengage lever next to the drive housing drum (Figure 35).

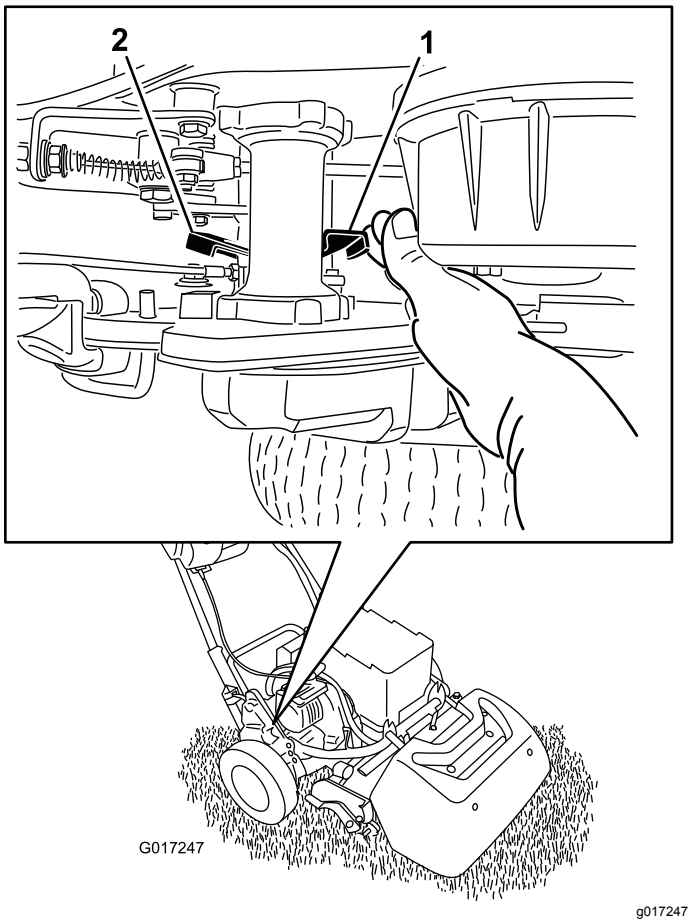

Figure 35

1. Traction engage/disengage lever-engaged
2. Traction engage/disengage lever-disengaged

2. Rotate the lever rearward to disengage the transmission from the drum.

   Important: **Push the lever from the front to prevent your hand from being struck by the spring loaded lever.**

3. Move the machine as needed

   Important: **If possible, do not tow the machine. If it is absolutely necessary, do not tow at any speed greater than 4.8 kph (3 mph); always disengage the transmission from the drum. Failing to do so will likely cause damage to the machine, especially the electrical components.**

4. When finished, rotate the lever forward to engage the transmission to the drum.

Note: The service brake is still operational with the transmission disengaged from the drum.

Using the InfoCenter LCD Display

The InfoCenter LCD display shows information about your machine such as the current battery charge, the speed, various diagnostics, and other information about the machine and the battery pack. Figure 36 illustrates the InfoCenter and the main information screen.

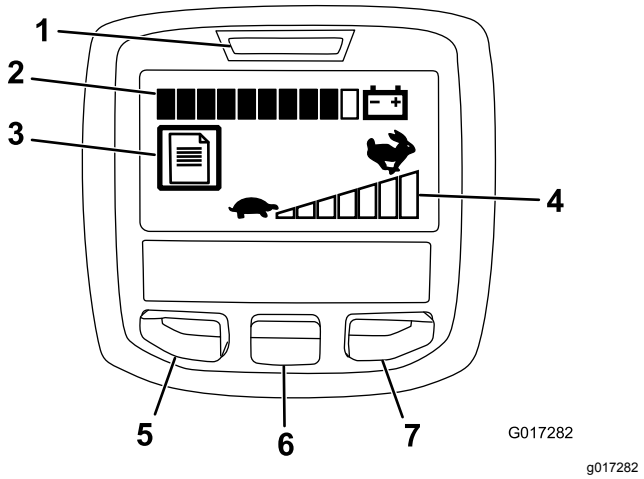

Figure 36

1. Power light/fault indicator
2. Battery charge indicator
3. Fault log indicator
4. Speed control setting
5. Menu access/back button
6. Down button
7. Right button

- Power light/fault indicator—illuminates when you turn the machine on. You can return the key to the RUN position when this light illuminates. This light also blinks when there is a machine fault.
- Battery charge indicator—when the battery has a full charge, all of the boxes in the indicator will be filled in with black. As power is used, boxes will be filled with white starting from the right and proceeding to the left as the battery drains. When only 1 box is still black, the battery pack is almost out of power and you should immediately proceed to charge the battery.
- Fault log indicator—this icon indicates that there is a current fault log to review.
- Speed control setting—the bars turn black from left to right the faster you set the speed control. When all bars are filled with white, the machine is at zero speed.
- Menu access/back button—press this button to access the InfoCenter menus. You can also use it to back out of any menu you are currently using.
- Down button—use this button to scroll down menus.
- Right button—use this button to open a menu where a right arrow indicates additional content.

Note: The purpose of each button may change depending on what is required at the time. Each button has a label with an icon displaying its current function.

Using the Menus

To access the InfoCenter menu system, press the menu access button while at the main screen. This brings you to the main menu. Refer to the following tables for a synopsis of the options available from the menus:

Main Menu	
Menu Item	**Description**
Faults	The Faults menu contains a list of the recent machine faults. Refer to the *Service Manual* or your authorized Toro distributor for more information on the Faults menu and the information contained there.
Service	The Service menu contains information on the machine such as hours of use and battery usage and status.
Diagnostics	The Diagnostics menu lists various states that the machine currently has. You can use this to troubleshoot certain issues as it will quickly tell you which machine controls are on and which are off.
About	The About menu lists the model number, serial number, and software version of your machine.
Settings	The Settings menu allows you to customize the InfoCenter display.

Service Menu	
Menu Item	**Description**
Hours	Lists the total number of hours that the machine has been turned on.
Mow Time	Lists the total number of hours that the reel has been turned on.
Power Use	Lists the instantaneous power delivered by the battery in watts.
Battery Charge	Lists the current battery charge as a percent of capacity.
Battery Current	Lists the instantaneous current delivered by the battery in amps.
Battery Volts	Lists the battery potential in volts.
Energy	Lists the total energy delivered by the battery over its entire life in watt-hours.

Diagnostics Menu	
Menu Item	**Description**
Key On	Indicates whether the key switch is in the on or off.
Key Start	Indicates whether the key switch is in the START position or not..
PBrake Latch	Indicates whether the parking-brake latch is on or off.
EZ Turn	Indicates whether the EZ-Turn circuit is open or closed.
Traction	Indicates whether the traction lever is on or off.
Reel Enable	Indicates whether the reel is engaged or not.
Throttle	Indicates the throttle control setting in volts (used to calculate the target rpm).
Target rpm	Lists the desired motor rpm as indicated by the speed control setting.
Motor rpm	Lists the actual motor rpm.
12V Supply	Lists the sensor supply voltage #1 of the controller.
5V Supply	Lists the sensor supply voltage #2 of the controller.
CAN Bus	Lists the machine communication bus status.

About Menu	
Menu Item	**Description**
Model	Lists the model number of the machine.
SN	Lists the serial number of the machine.
S/W Rev	Lists the revision number of the machine software.

Settings Menu	
Menu Item	**Description**
Language	Use this setting to change the language used on the InfoCenter.
Units	Use this setting to change the units used by the InfoCenter. The menu choices are English and metric.
LCD Backlight	Use this setting to increase or decrease the brightness of the LCD display.
LCD Contrast	Use this setting to change the contrast between the dark and light areas of the LCD display.

Note: If you inadvertently change the language or contrast to a setting where you can no longer understand or view the display, contact your authorized Toro distributor for assistance in resetting the display.

Operating Tips

Important: **Grass clippings act as a lubricant when mowing. Operating the cutting unit excessively without grass clippings can damage the cutting unit.**

Preparing to Mow

Ensure that the machine is carefully adjusted and is set evenly on both sides of the reel. For the best performance and battery life, set the bedknife to have a light contact with the reel. Improper mower adjustment is magnified in the appearance of the clipped turf.

If the transport wheels are installed on your machine, perform the following steps to remove the wheels:

1. Push the kickstand down with your foot and pull up on the handle support until the kickstand has rotated forward, over center.
2. Remove the transport wheels.
3. Carefully lower the machine off the kickstand.

Mowing the Green

The green should be mowed in a straight back-and-forth direction across the green. Avoid circular mowing or turning the mower on the green, as scuffing may occur.

Turning the mower should be done off the green by raising the cutting reel (pushing the handle down) and turning on the traction drum. If you enable the EZ-Turn switch, the traction unit slows down when you raise the cutting unit making the turn more manageable, especially for novice users.

Mowing should be done at a normal walking pace. Fast speeds save very little time and result in an inferior mowing job.

To assist in maintaining a straight line across the green and to keep the machine an equal distance from the edge of the previous cut, use the alignment stripes on the grass basket (Figure 37).

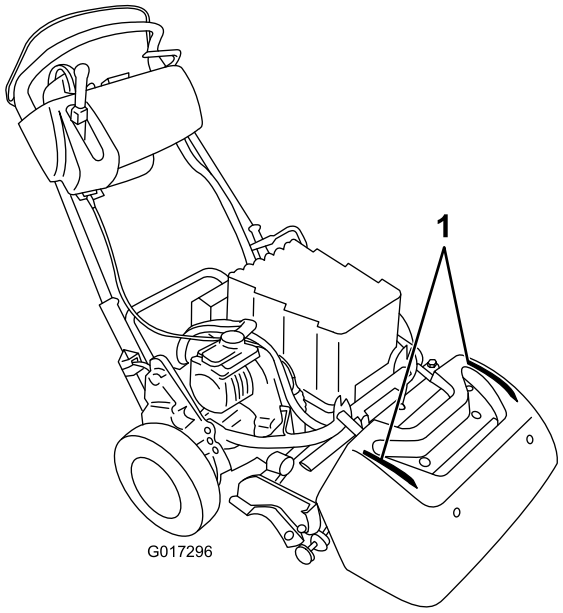

g017296

Figure 37

1. Alignment stripes

Operating the Machine in Low Light Conditions

When operating in low light conditions, use the LED Light Kit; contact your authorized Toro distributor.

Important: **Do not use other light systems with this machine; they may damage the battery pack or electrical system.**

Operating the Controls while Mowing

1. Start the engine, set the throttle to a reduced speed, push down on the handle to raise the cutting unit, press the operator-presence control, move the traction and reel-drive engagement lever to the FORWARD (transport) position, and transport the machine onto the collar of the green (Figure 38).
2. Move the lever to the NEUTRAL position (Figure 38).

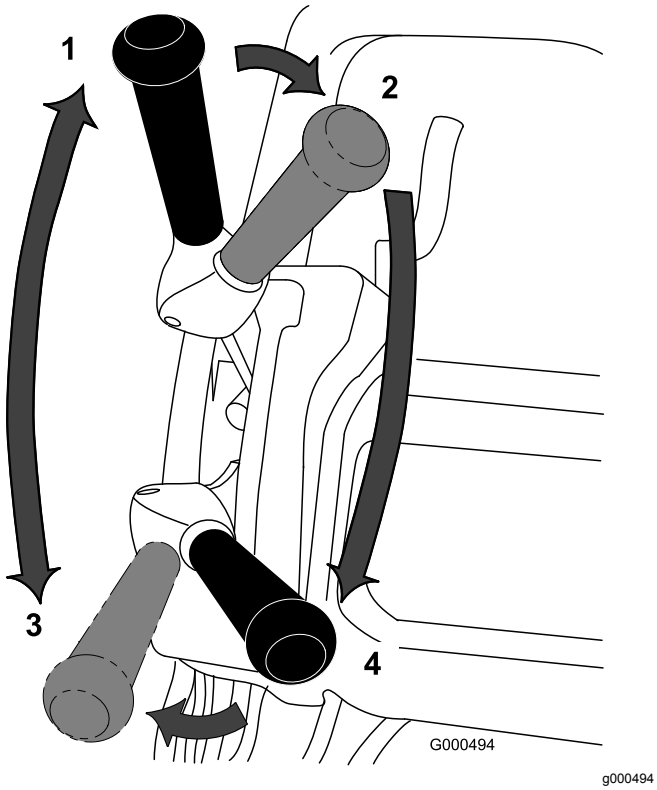

g000494

Figure 38

Traction and Reel-Drive Lever Positions

1. NEUTRAL
2. Traction—NEUTRAL and reel drive—DISENGAGE
3. Traction—FORWARD (transport)
4. Traction—FORWARD and reel drive—ENGAGE

3. Move the lever to the traction—NEUTRAL and reel drive—DISENGAGE position (Figure 38).
4. Move the lever to the traction—FORWARD and reel drive—ENGAGE position (Figure 38), increase the throttle speed until the machine is traveling at the desired ground speed, drive the machine onto the green, lower the cutting unit to the ground, and begin mowing.

Preparing to Transport the Machine after Mowing

1. Drive off the green, reduce the speed to the ZERO position, move the traction and reel drive lever to the NEUTRAL postion, and shut off the machine.
2. Empty the grass basket of clippings and install the grass basket on the mower.

After Operation

After Operation Safety

General Safety

- Reduce the speed control before shutting off the machine.
- Clean grass and debris from the machine to help prevent fires.

Transporting the Machine

After mowing, transport the machine away from the job site; refer to Transporting the Machine a Short Distance (page 25) or Transporting the Machine a Considerable Distance (page 25).

Maintaining the Lithium Ion Battery Pack

⚠ WARNING

The battery pack contains high voltage, which could burn or electrocute you.

- **Do not attempt to open the battery pack.**
- **Do not place anything in the connector of the battery pack other than the wire harness connector that came with the product.**
- **Use extreme care when handling a battery pack with a cracked case.**
- **Use only the charger designed for the battery pack.**

Charging the Battery Pack

Charge the battery pack when you are finished mowing for the day to ensure that it is fully charged for the next day's mowing. Unlike other battery types, lithium ion batteries do not have a charge memory issue and do not need to be fully discharged before charging them.

Refer to the Lithium Ion Battery Charger *Operator's Manual* for detailed instructions on charging the battery pack.

If you will be storing the mower for more than 10 days, ensure that you place it on the charger and leave the charger turned on. After 10 days of inactivity, the charger automatically switches to storage mode, during which it reduces and maintains the charge to 40% of the maximum charge. Refer to Storing the Machine (page 42) for more information on storing the

machine and for removing the battery from storage mode.

Transporting the Battery Pack

The US Department of Transportation and international transportation authorities require that lithium ion batteries be transported using special packaging and only be transported by carriers certified to haul them. In the US, you are allowed to transport the battery when it is installed on the machine as battery powered equipment, with some regulatory requirements. Contact the US Department of Transportation or the appropriate government body in your country for detailed regulations on transportation of your eFlex or eFlex battery.

For detailed information on shipping the battery pack, refer to the *Installation Instructions* included with the Battery Shipping Kit (Model No. 120-6950). These instructions are available on www.Toro.com.

Caring for the Battery Pack

The lithium-ion-battery holds a sufficient charge to perform intended work during its life span. As time goes by, the total amount of work the battery is able to complete on a single charge gradually diminishes. The following table lists the approximate expected work that the machine should be capable of over the first 5 years of use:

Year	Area Cut Per Full Charge
1	4,240 m^2 (45,600 ft^2)
2	4,070 m^2 (43,800 ft^2)
3	3,900 m^2 (42,000 ft^2)
4	3,790 m^2 (40,800 ft^2)
5	3,600 m^2 (39,000 ft^2)

Note: Your results may vary depending on the distance you need to transport the machine, the contact setting of the bedknife, and other factors as discussed in this section.

To achieve maximum life and use from your battery, apply the following care guidelines:

- Do not open the battery pack. There are no user serviceable parts inside. If you open the pack you will void your warranty. The pack is protected by tamper-alerting devices.
- Store/park the machine in a clean, dry garage or storage area, **away from direct sunlight and heat sources.** Do not store it in a location where the temperature drops below -25°C (-13°F) or rises above 45°C (113°F). **Temperatures outside of this range will damage your battery.** High temperatures during storage, especially at a high state of charge, reduces the life of the batteries.
- When storing for more than 10 days, ensure that the machine is in a cool location, out of sunlight, and connected to the charger.
- If you are mowing in hot conditions or in sunlight, the battery may overheat. If this happens, a high-temperature alert will appear on the InfoCenter LCD display. In this condition, the machine no longer operates with the reel engaged and the machine slows down.

  Immediately drive the machine to a cool location out of the sun, turn off the machine, and allow the battery to cool fully before resuming operation.
- Keep the battery pack cover clean. The white color reflects sunlight and slows the heat buildup in the battery pack. A dirty cover increases the heat in the battery pack each day and reduces the energy capacity.
- Adjust the bed knife to reel contact to be as light as possible. This reduces the power needed to run the reel and increases the amount of work the machine performs on each charge.

Maintenance

⚠ WARNING

Failing to properly maintain the machine could result in premature failure of machine systems, causing possible harm to you or bystanders.

Keep the machine well maintained and in good working order as indicated in these instructions.

Note: Determine the left and right sides of the machine from the normal operating position.

Note: Download a free copy of the electrical or hydraulic schematic by visiting www.Toro.com and searching for your machine from the Manuals link on the home page.

⚠ CAUTION

If you leave the key in the ignition switch, someone could accidently start the engine and seriously injure you or other bystanders.

Remove the key from the ignition and disconnect the battery before you do any maintenance.

Recommended Maintenance Schedule(s)

Maintenance Service Interval	Maintenance Procedure
Before each use or daily	• Check the operation of the interlock switches.
After each use	• Clean the machine.
Every 1,000 hours	• Inspect the reel drive belt. • Inspect the transmission bearings. Replace as necessary.
Before storage	• Paint chipped surfaces.
Yearly	• Grease the motor coupler.

Important: **Refer to your battery *Owner's Manual* for additional maintenance procedures.**

Daily Maintenance Checklist

Important: **Duplicate this page for routine use.**

Maintenance Check Item	**For the week of:**						
	Mon.	**Tues.**	**Wed.**	**Thurs.**	**Fri.**	**Sat.**	**Sun.**
Check the safety interlock operation.							
Check the parking brake operation.							
Check that pivot joints operate freely.							
Clean the battery case and motor cooling fins.							
Check for unusual operating noises.							
Check the reel-to-bedknife adjustment.							
Check the height-of-cut adjustment.							
Touch up damaged paint.							

Notation for Areas of Concern		
Inspection performed by:		
Item	Date	Information

Pre-Maintenance Procedures

Maintenance Safety

- Disengage the drives and the cutting unit, engage the parking brake, shut off the machine, and remove the key. Wait for all movement to stop before adjusting, cleaning, or repairing the machine.
- If the machine must be running to perform a maintenance adjustment, keep your hands, feet, clothing, and any parts of the body away from the cutting unit, attachments, and any moving parts. Keep bystanders away.
- Keep all parts in good working condition and all hydraulic fittings tight. Replace all worn, damaged, or missing parts and decals. Keep all fasteners tight to ensure that the machine is in safe working condition.
- Check the grass catcher components frequently and replace them when necessary.
- Clean grass and debris from the cutting unit, drives, mufflers, and cooling screens to help prevent fires.
- Carefully release pressure from components with stored energy.
- If major repairs are ever needed or if assistance is desired, contact an authorized Toro distributor.
- To ensure optimum performance and continued safety certification of the machine, use only genuine Toro replacement parts and accessories. Replacement parts and accessories made by other manufacturers could be dangerous, and such use could void the product warranty.

Disconnecting the Battery

Before performing maintenance on the machine, disconnect the machine from the battery pack by pulling the T-handle connector off the main power supply connector (Figure 39).

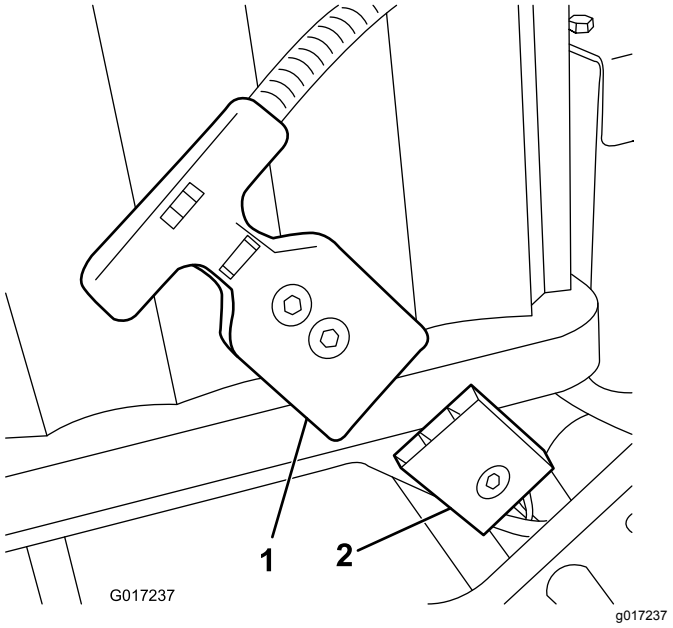

Figure 39

1. T-handle connector
2. Main power supply connector

Lubrication

Greasing the Motor Coupler

Service Interval: Yearly

Grease Type: General-purpose grease.

1. Shut off the machine and disconnect the battery pack.
2. Remove the 2 bolts that secure the motor to the transmission case (Figure 40).

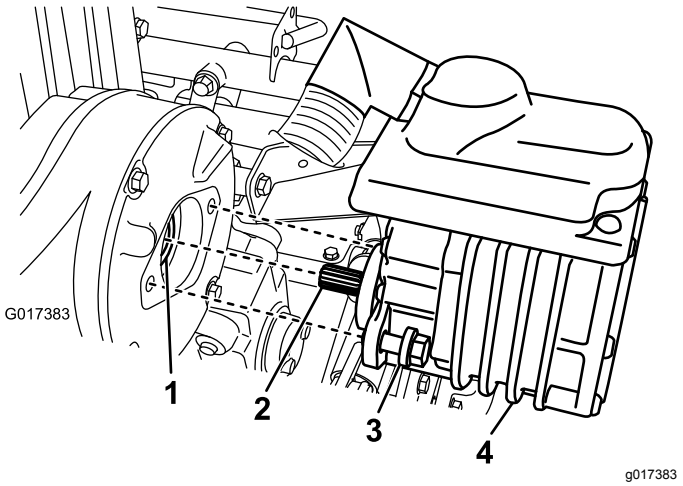

Figure 40

1. Coupler—female
2. Motor shaft
3. Bolt
4. Electric motor

3. Pull the motor out and away from the transmission case.
4. Add 1 to 2 pumps of grease from a grease gun to the female coupler in the transmission case (Figure 40).
5. Install the motor and secure it with the 2 bolts that you removed previously. Torque the bolts to 29 to 33 N·m (21 to 25 ft-lb).

Electrical System Maintenance

Electrical System Safety

Disconnect the battery before making any repairs. Disconnect the negative terminal first and the positive last. Connect the positive first and negative last.

Servicing the Battery Pack

The only user serviceable parts in the battery pack are the labels and the fuse. If you attempt to open the main compartment of the battery pack you will void your warranty. If you are having problems with your battery pack, contact your authorized Toro distributor for help.

⚠ WARNING

The battery pack contains high voltage which could burn or electrocute you.

- **Do not attempt to open the battery pack.**
- **Do not place anything in the connector of the battery pack other than the wire harness connector that came with the product.**
- **Use extreme care when handling a battery pack with a cracked case.**
- **Only use the charger designed for the battery pack**

Shipping the Battery Pack for Service

If your battery pack requires service, contact your authorized Toro distributor for assistance. **If you must ship the battery pack, obtain the Battery Shipping Kit (Part No. 120-6950).** This kit contains the proper tape, labeling, and instructions you will need to ship the battery pack.

Important: **Failure to correctly pack and label the battery pack for shipping can result in large fines. Refer to the instructions included in the Battery Shipping Kit (Part No. 120-6950), available for free on www.Toro.com.**

Replacing Fuses

If the machine does not turn on, even after charging, check the machine fuses as follows:

1. Turn off the machine and disconnect the battery pack.
2. Remove the 2 rear screws from the electrical box, loosen the 2 upper screws, and remove the box cover (Figure 41).

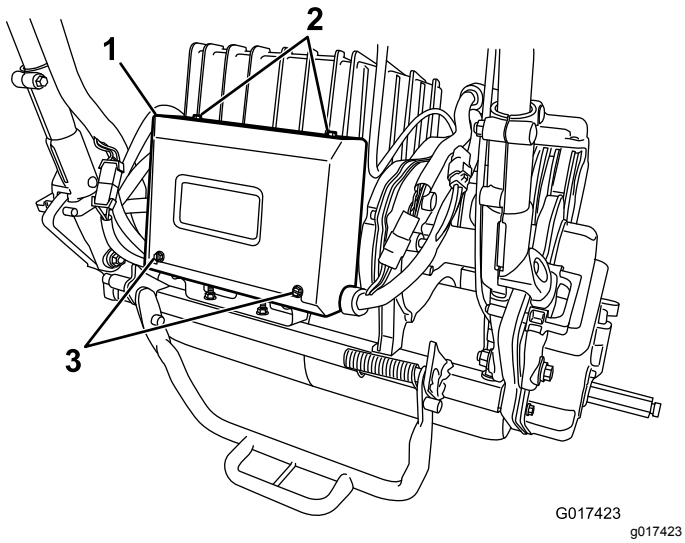

Figure 41

1. Electrical box
2. Upper screws
3. Rear screws

3. Check the fuses in the fuse block (Figure 42).

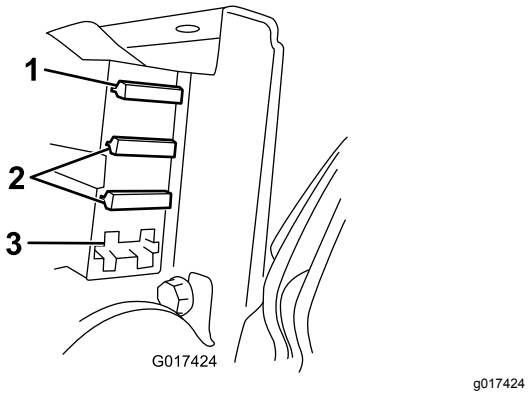

Figure 42

1. Fuse (30 A)
2. Fuse (3 A)
3. Open slot

- If any fuse is blown, replace them with a fuse of the appropriate voltage and amperage (Figure 42).

Important: **All fuses on the machine are rated for 80 V. Do not use 12 V automotive fuses.**

- If the fuses are not blown, check the battery pack fuse as follows:
  A. Raise the battery platform; refer to 5 Installing the Battery Pack (page 11).
  B. Remove the fuse cover (Figure 43).

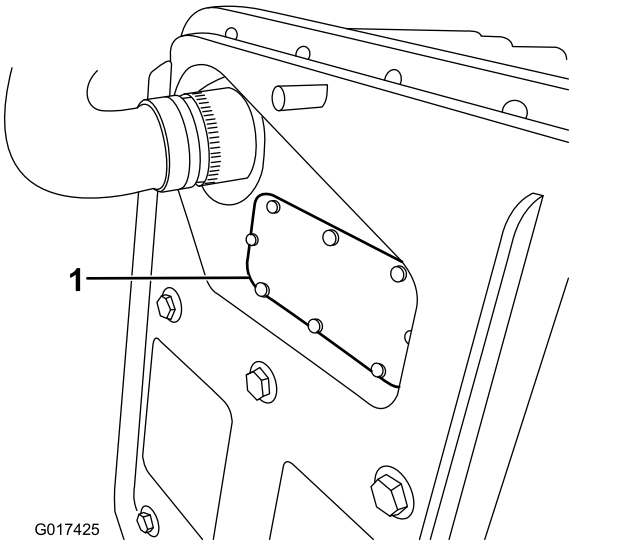

Figure 43

1. Fuse cover

  C. Check the fuse and replace it if it is blown. **Use only a Toro fuse (Part No. 119-1208) to replace this fuse.** This fuse is specially designed for the battery pack. Other fuses may cause irreversible damage to the pack.
  D. Replace and secure the fuse cover. Torque the cover screw to 0.34 N·m (3 in-lb).
  E. Lower and secure the battery platform.

Servicing the Traction Interlock Switch

Use the following procedure if the traction-interlock switch needs adjustment or replacement.

1. Turn off the machine and disconnect the battery pack.
2. Remove the control panel.
3. Engage the traction lever.

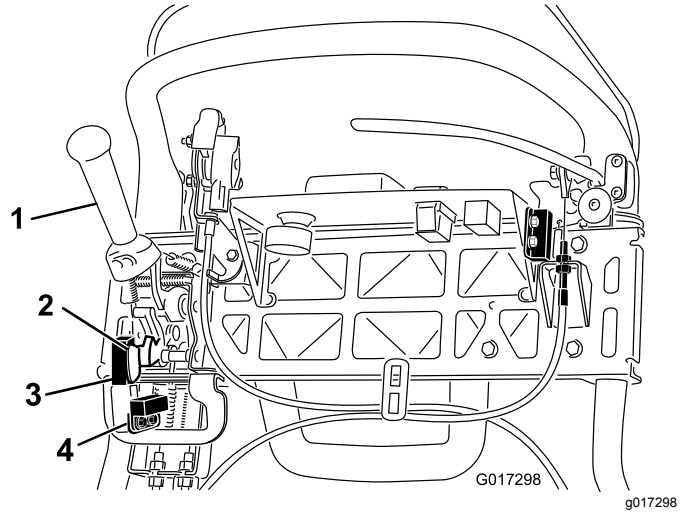

Figure 44

1. Traction lever
2. Mow sensor flag
3. Mow sensor
4. Traction-interlock switch

4. Loosen the interlock switch mounting fasteners (Figure 44).
5. Place a 1.6 mm (0.062 inch) thick shim between the traction lever and the interlock switch (Figure 44).
6. Tighten the interlock switch mounting fasteners. Recheck the gap. The traction lever must not contact the switch.
7. Engage the traction lever and check the gap. The normal operating range is between 0.76 to 3.05 mm (0.03 to 0.12 inch). With the traction lever engaged, verify that the switch loses continuity. Replace the switch if necessary.

Servicing the Mow Sensor

1. Shut off the machine and disconnect the battery pack.
2. Remove the control panel.
3. Push the traction lever to the left and engage the mower.
4. Loosen the mow sensor mounting fasteners (Figure 44).
5. Place a 1.6 mm (0.062 inch) thick shim between the mow sensor flag and the mow sensor (Figure 44).
6. Tighten the sensor mounting fasteners. Check the gap. The flag must not contact the sensor.
7. Engage the traction lever in mowing mode and verify that the switch loses continuity. Replace the sensor if necessary.

Servicing the Brake-Interlock Switch

1. Shut off the machine and disconnect the battery pack.
2. Remove the console cover.
3. Engage the service-brake lever and engage the parking-brake latch.
4. Loosen and remove the interlock switch mounting fasteners (Figure 45).

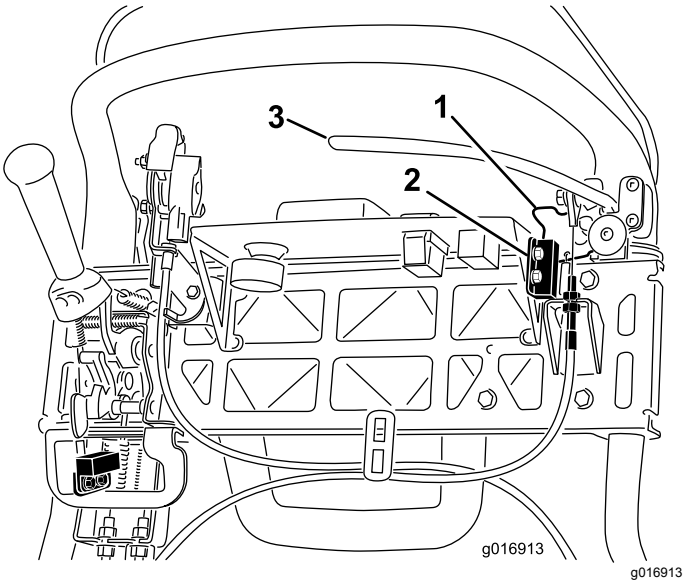

Figure 45

1. Parking-brake latch
2. Interlock switch
3. Service-brake lever

5. Place a 1.6 mm (0.062 inch) thick shim between the parking-brake latch and the interlock switch (Figure 45).
6. Install and tighten the interlock switch mounting fasteners. Check the gap. The latch must not contact the switch.
7. Engage the brake lever and rotate the latch. Verify that the switch loses continuity. Replace the switch if necessary.

Brake Maintenance

Adjusting the Service/Parking Brake

If the service/parking brake slips when operated, adjust the cable as follows:

1. Turn off the machine and disconnect the battery pack.
2. Move the service/parking brake lever to the OFF position.
3. Remove the console cover.
4. To increase the cable tension, loosen the upper cable jam nut and tighten the lower cable jam nut (Figure 45) until a force of 156 N (35 lb) applied to the brake lever handle is required to release the parking-brake latch.

   Important: **Do not over adjust or the brake band may drag.**

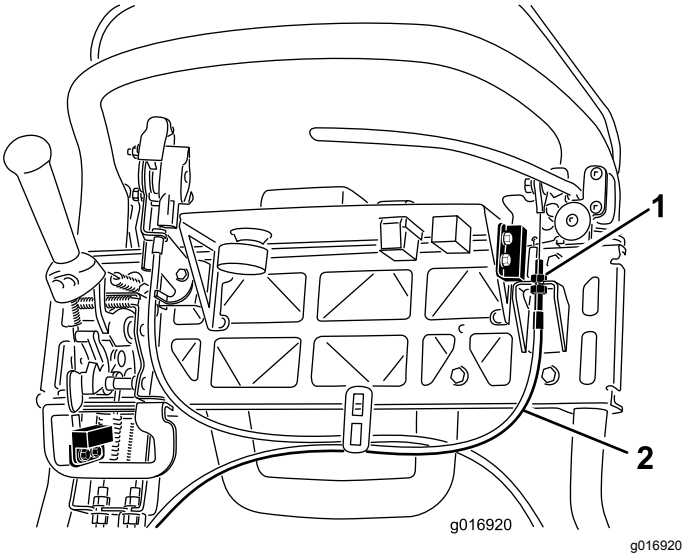

g016920

Figure 46

1. Jam nuts
2. Service-brake cable

Belt Maintenance

Inspecting the Reel Drive Belt

Service Interval: Every 1,000 hours

Make sure that the reel drive belt is properly tensioned to ensure proper operation of the machine and unnecessary wear.

1. Turn off the machine and disconnect the battery pack.
2. Loosen the flange bolt that secures the belt cover and remove the belt cover to expose the belt (Figure 47).

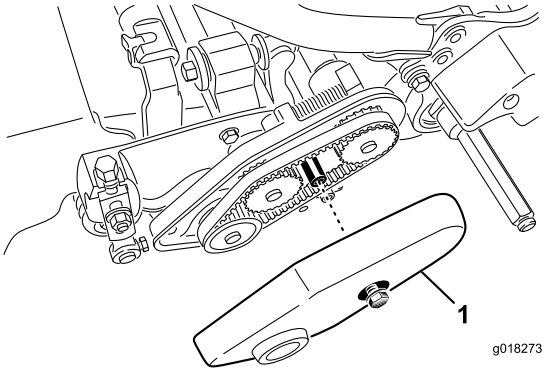

g018273

Figure 47

1. Belt cover

3. Adjust the belt tension by doing the following steps:
   A. Loosen the bearing housing mounting nut (Figure 48).

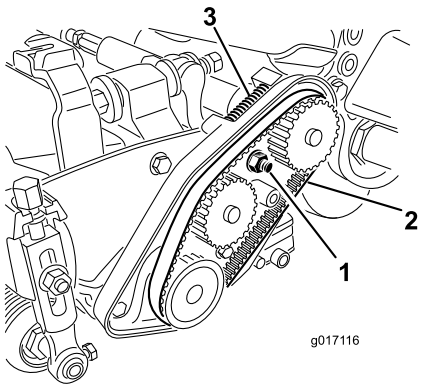

g017116

Figure 48

1. Bearing housing mounting nut
2. Reel-drive belt
3. Compression spring

B. Using a 16 mm (5/8 inch) wrench, rotate the bearing housing to ensure that it operates freely.

C. Clean any debris from inside the belt compartment and from around the compression spring (Figure 48).

D. Ensure that the compression spring is applying the proper tension on the belt.

E. Tighten the bearing housing mounting nut.

F. Install the belt cover.

Accessing the Transmission Cover Hole

Remove the rubber plug (Figure 49) from the hole in the front of the transmission if you need to access the reel clutch.

Important: **Do not operate the machine without the rubber plug.**

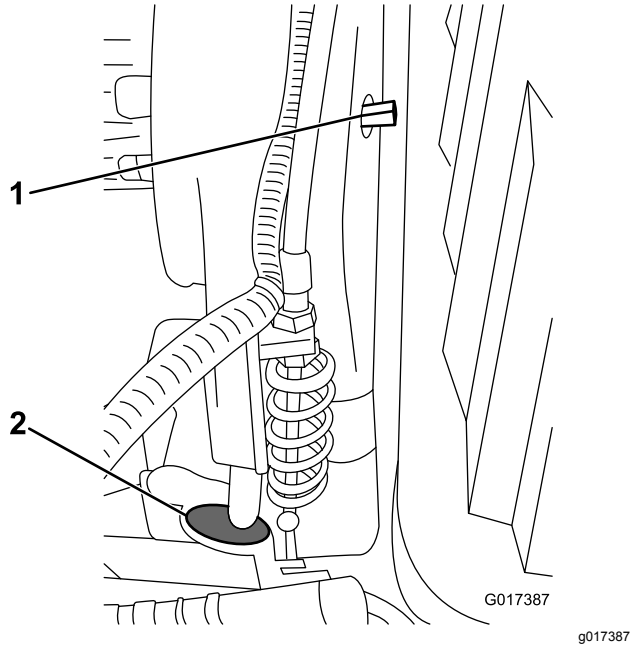

Figure 49

1. Engage/disengage shaft
2. Rubber hole plug

Engaging/Disengaging the Transmission-Belt Tensioner

The transmission belt is tensioned by a spring-loaded idler pulley. If you must engage or disengage the belt tension, use a 3/8-inch wrench to rotate the engage/disengage shaft (Figure 49) to the desired position. Rotating the shaft 1/4 turn (90°) clockwise disengages the idler from the belt (Figure 50).

Note: You must disengage the belt tension before removing the transmission cover.

Note: The transmission belt is properly tensioned when the alignment marks on the transmission cover and the engagement shaft are aligned.

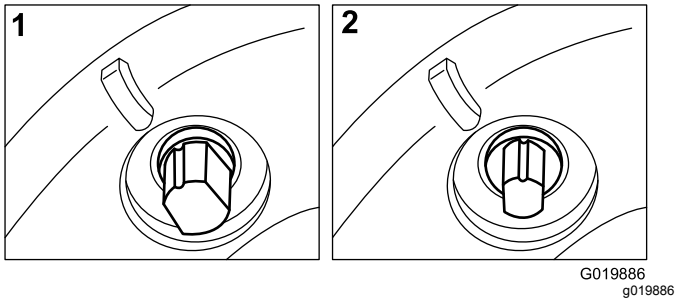

Figure 50

1. ENGAGED
2. DISENGAGED

Adjusting the Reel Control

If the reel control does not properly engage, an adjustment is required.

1. Turn off the machine and disconnect the battery pack.
2. Ensure that the reel control is disengaged.
3. At the transmission bulkhead, adjust the reel-control cable (Figure 51), to attain a spring length of 70.6 to 72.4 mm (2.78 to 2.85 inches).

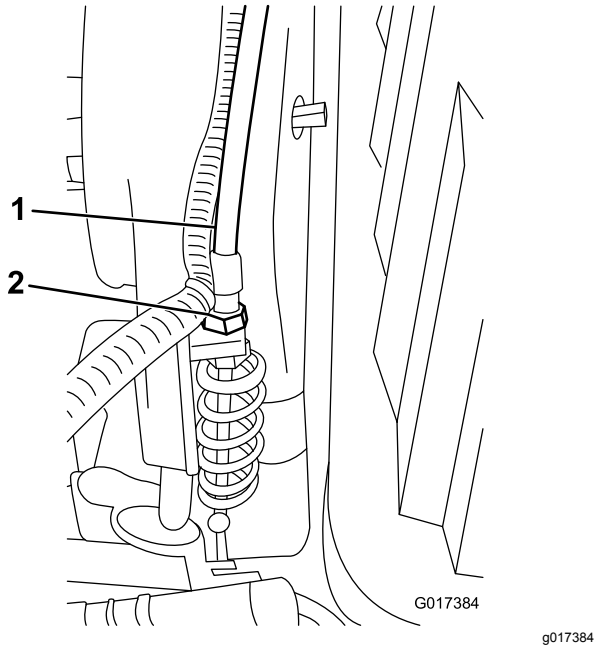

Figure 51

1. Reel-control cable
2. Jam nuts

4. At the control handle bulkhead, loosen the reel-control cable until there is slack in the cable (Figure 52).

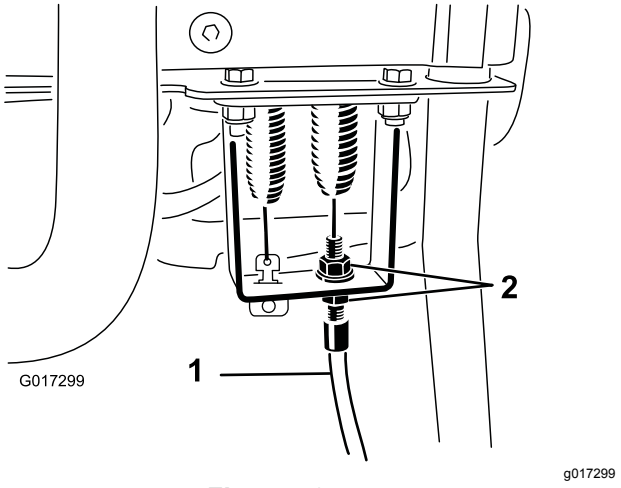

Figure 52

1. Reel control cable
2. Jam nuts

5. At the control handle bulkhead, tighten the reel-control cable enough to remove the slack from the cable without extending the spring.
6. Check the operation as follows:
   - Verify that the reel clutch teeth disengage when the clutch is released and the reel clutch teeth do not bottom out when engaged.

     Note: Remove the rubber plug (Figure 49) from the hole in the front of the transmission to view reel clutch.
   - The reel stopping time must be less than 7 seconds with the reel to bedknife backed off.
   - Refer to the *Service Manual* or contact your authorized Toro distributor for further assistance.

Cleaning

Cleaning the Machine

Service Interval: After each use

After each use, wash the machine with mild detergent and water. Do not pressure wash the machine. Avoid excessive use of water, especially near the shift-lever plate, the InfoCenter, the power center, and the machine power connector. Clean the motor to provide proper cooling during operation. Also, keep the battery pack as clean as possible so that it maintains a white color. This reflects sunlight and keeps the battery from overheating in the sun.

Important: **Always store or park the machine out of direct sunlight, as heating from the sun reduces the battery-pack life span.**

Storage

Storage Safety

- Park the machine on a level surface, engage the parking brake, shut off the engine, remove the key, and wait for all movement to stop before storing the machine.
- Never store the machine where there is an open flame, spark, or pilot light, such as on a water heater or on other appliances.
- Allow the machine to cool before you store the machine in any enclosure.

Storing the Machine

1. Clean the machine; refer to Cleaning the Machine (page 41).

   Important: **You can wash the machine with mild detergent and water. Do not pressure-wash the machine. Avoid excessive use of water, especially near the shift-lever plate, the InfoCenter, the power center, and the machine power connector.**

2. Store the machine in a cool, clean, dry garage or storage area, **away from direct sunlight**. Do not store it in a location where the temperature drops below -25°C (-13°F) or rises above 45°C (113°F). **Temperatures outside of this range will damage your battery.**

   Important: **The temperature that the battery pack is stored at will affect its long-term life. Storage for long periods of time at high temperatures will reduce the life of the battery pack, especially if the pack is stored with a high charge. Where possible store the machine in a cool (not below freezing) location.**

3. Connect the battery to the charger and **keep the charger plugged into a power outlet and turned on for the duration of storage.**

   Important: **After 10 days, the charger enters a storage maintenance mode, adjusting the battery to a charge of 40% of maximum. This charge level during long-term storage ensures the full life of the battery. If you do not keep the battery pack on the charger and allow it to enter storage mode, the high state of charge in the pack will shorten the life of the battery, especially if stored in warm conditions.**

4. Check and tighten all fasteners. Repair or replace any part that is worn or damaged.
5. Paint all scratched or bare metal surfaces with paint available from your authorized Toro distributor.
6. Cover the machine to protect it and keep it clean.

Removing the Machine from Storage

1. Turn off and disconnect the charger from the machine.
2. Connect the T-handle connector to the main power connector.
3. Turn on the machine and wait for 20 seconds.
4. Turn off the machine and disconnect the battery.
5. Connect the battery to the charger and turn on the charger.

   Note: The charger will enter the normal charge mode and charge the battery to full capacity.

Notes:

Notes:

European Privacy Notice

The Information Toro Collects
Toro Warranty Company (Toro) respects your privacy. In order to process your warranty claim and contact you in the event of a product recall, we ask you to share certain personal information with us, either directly or through your local Toro company or dealer.

The Toro warranty system is hosted on servers located within the United States where privacy law may not provide the same protection as applies in your country.

BY SHARING YOUR PERSONAL INFORMATION WITH US, YOU ARE CONSENTING TO THE PROCESSING OF YOUR PERSONAL INFORMATION AS DESCRIBED IN THIS PRIVACY NOTICE.

The Way Toro Uses Information
Toro may use your personal information to process warranty claims, to contact you in the event of a product recall and for any other purpose which we tell you about. Toro may share your information with Toro's affiliates, dealers or other business partners in connection with any of these activities. We will not sell your personal information to any other company. We reserve the right to disclose personal information in order to comply with applicable laws and with requests by the appropriate authorities, to operate our systems properly or for our own protection or that of other users.

Retention of your Personal Information
We will keep your personal information as long as we need it for the purposes for which it was originally collected or for other legitimate purposes (such as regulatory compliance), or as required by applicable law.

Toro's Commitment to Security of Your Personal Information
We take reasonable precautions in order to protect the security of your personal information. We also take steps to maintain the accuracy and current status of personal information.

Access and Correction of your Personal Information
If you would like to review or correct your personal information, please contact us by email at legal@toro.com.

Australian Consumer Law

Australian customers will find details relating to the Australian Consumer Law either inside the box or at your local Toro Dealer.

California Proposition 65 Warning Information

What is this warning?

You may see a product for sale that has a warning label like the following:



WARNING: Cancer and Reproductive Harm—www.p65Warnings.ca.gov.

What is Prop 65?

Prop 65 applies to any company operating in California, selling products in California, or manufacturing products that may be sold in or brought into California. It mandates that the Governor of California maintain and publish a list of chemicals known to cause cancer, birth defects, and/or other reproductive harm. The list, which is updated annually, includes hundreds of chemicals found in many everyday items. The purpose of Prop 65 is to inform the public about exposure to these chemicals.

Prop 65 does not ban the sale of products containing these chemicals but instead requires warnings on any product, product packaging, or literature with the product. Moreover, a Prop 65 warning does not mean that a product is in violation of any product safety standards or requirements. In fact, the California government has clarified that a Prop 65 warning "is not the same as a regulatory decision that a product is 'safe' or 'unsafe.'" Many of these chemicals have been used in everyday products for years without documented harm. For more information, go to https://oag.ca.gov/prop65/faqs-view-all.

A Prop 65 warning means that a company has either (1) evaluated the exposure and has concluded that it exceeds the "no significant risk level"; or (2) has chosen to provide a warning based on its understanding about the presence of a listed chemical without attempting to evaluate the exposure.

Does this law apply everywhere?

Prop 65 warnings are required under California law only. These warnings are seen throughout California in a wide range of settings, including but not limited to restaurants, grocery stores, hotels, schools, and hospitals, and on a wide variety of products. Additionally, some online and mail order retailers provide Prop 65 warnings on their websites or in catalogs.

How do the California warnings compare to federal limits?

Prop 65 standards are often more stringent than federal and international standards. There are various substances that require a Prop 65 warning at levels that are far lower than federal action limits. For example, the Prop 65 standard for warnings for lead is 0.5 µg/day, which is well below the federal and international standards.

Why don't all similar products carry the warning?

- Products sold in California require Prop 65 labelling while similar products sold elsewhere do not.
- A company involved in a Prop 65 lawsuit reaching a settlement may be required to use Prop 65 warnings for its products, but other companies making similar products may have no such requirement.
- The enforcement of Prop 65 is inconsistent.
- Companies may elect not to provide warnings because they conclude that they are not required to do so under Prop 65; a lack of warnings for a product does not mean that the product is free of listed chemicals at similar levels.

Why does Toro include this warning?

Toro has chosen to provide consumers with as much information as possible so that they can make informed decisions about the products they buy and use. Toro provides warnings in certain cases based on its knowledge of the presence of one or more listed chemicals without evaluating the level of exposure, as not all the listed chemicals provide exposure limit requirements. While the exposure from Toro products may be negligible or well within the "no significant risk" range, out of an abundance of caution, Toro has elected to provide the Prop 65 warnings. Moreover, if Toro does not provide these warnings, it could be sued by the State of California or by private parties seeking to enforce Prop 65 and subject to substantial penalties.

Battery Limited Warranty

The rechargeable Lithium-Ion battery (Model 04232) is warranted to be free from defects in materials and workmanship for a period of 5 years or 1,925 Kilowatt Hours (kWh) of use, whichever occurs first. Over time, battery consumption reduces the amount of energy capacity (Watt-hours) available per full charge. Energy consumption varies due to operating characteristics, accessories, turf, terrain, adjustments, and temperature.

The warranty program includes two warranty coverage levels:

Warranty coverage - Tier #1: Full warranty coverage applies to the first two years (730 days) from product purchase invoice date or 820 kWh of battery output, whichever occurs first. If a warrantable failure occurs during Tier 1, Toro will replace the battery with a new or remanufactured battery at no charge to you. This includes diagnostics, labor, parts, and transportation. The replacement battery retains the remainder of the original battery warranty.

Warranty Coverage - Tier #2-7: During the remaining 3 years or 1925 kWh, whichever occurs first, a prorated “Part Only” warranty applies. This coverage excludes diagnostics, labor, and transportation. Warranty coverage is based on the table below using days in service and kWh, whichever is greater, to determine the correct Tier. If a warrantable failure occurs during tier 2-7, the prorated warranty allows replacement of a defective battery with a new battery where the customer pays only for the portion of battery energy consumed. A new replacement battery purchased with a customer contribution receives full Tier #1 warranty coverage. The new battery requires registration.

Tier selection examples:

1. A battery fails at 1400 days and 1150 kWh. Days in service = Tier #5 because 1400 days is less than 1460 days. kWh = Tier #3 because 1150 kWh is less than 1200 kWh. Select Tier #5 because 5 is greater than 3 (whichever is greater).
2. A battery fails at 900 days and 1300 kWh. Days in service = Tier #2 because 900 days is less than 910 days. kWh = Tier #4 because 1300 kWh is less than 1390 kWh. Select Tier #4 because 4 is greater than 2 (whichever is greater).

Your Toro Distributor establishes the retail cost of the battery and this cost includes the current battery cost, freight, tax, duty, and handling.

Tier	Years	Days	Total kWh Consumed	Customer Pay % Retail
1	≤2	0-730	0-820	Full Coverage
2	≤2.5	731-910	821-1010	16%
3	≤3	911-1095	1011-1200	28%
4	≤3.5	1096-1275	1201-1390	36%
5	≤4	1276-1460	1391-1570	44%
6	≤4.5	1461-1645	1571-1750	60%
7	≤5	1656-1825	1751-1925	68%

Toro General Commercial Product Warranty

A Two-Year Limited Warranty

Conditions and Products Covered

The Toro Company and its affiliate, Toro Warranty Company, pursuant to an agreement between them, jointly warrant your Toro Commercial product ("Product") to be free from defects in materials or workmanship for two years or 1500 operational hours*, whichever occurs first. This warranty is applicable to all products with the exception of Aerators (refer to separate warranty statements for these products). Where a warrantable condition exists, we will repair the Product at no cost to you including diagnostics, labor, parts, and transportation. This warranty begins on the date the Product is delivered to the original retail purchaser.
* Product equipped with an hour meter.

Instructions for Obtaining Warranty Service

You are responsible for notifying the Commercial Products Distributor or Authorized Commercial Products Dealer from whom you purchased the Product as soon as you believe a warrantable condition exists. If you need help locating a Commercial Products Distributor or Authorized Dealer, or if you have questions regarding your warranty rights or responsibilities, you may contact us at:

Toro Commercial Products Service Department
Toro Warranty Company
8111 Lyndale Avenue South
Bloomington, MN 55420-1196

952–888–8801 or 800–952–2740
E-mail: commercial.warranty@toro.com

Owner Responsibilities

As the Product owner, you are responsible for required maintenance and adjustments stated in your *Operator's Manual*. Failure to perform required maintenance and adjustments can be grounds for disallowing a warranty claim.

Items and Conditions Not Covered

Not all product failures or malfunctions that occur during the warranty period are defects in materials or workmanship. This warranty does not cover the following:

- Product failures which result from the use of non-Toro replacement parts, or from installation and use of add-on, or modified non-Toro branded accessories and products. A separate warranty may be provided by the manufacturer of these items.
- Product failures which result from failure to perform recommended maintenance and/or adjustments. Failure to properly maintain your Toro product per the Recommended Maintenance listed in the *Operator's Manual* can result in claims for warranty being denied.
- Product failures which result from operating the Product in an abusive, negligent, or reckless manner.
- Parts subject to consumption through use unless found to be defective. Examples of parts which are consumed, or used up, during normal Product operation include, but are not limited to, brake pads and linings, clutch linings, blades, reels, rollers and bearings (sealed or greasable), bed knives, spark plugs, castor wheels and bearings, tires, filters, belts, and certain sprayer components such as diaphragms, nozzles, and check valves, etc.
- Failures caused by outside influence. Conditions considered to be outside influence include, but are not limited to, weather, storage practices, contamination, use of unapproved fuels, coolants, lubricants, additives, fertilizers, water, or chemicals, etc.
- Failure or performance issues due to the use of fuels (e.g. gasoline, diesel, or biodiesel) that do not conform to their respective industry standards.
- Normal noise, vibration, wear and tear, and deterioration.
- Normal "wear and tear" includes, but is not limited to, damage to seats due to wear or abrasion, worn painted surfaces, scratched decals or windows, etc.

Parts

Parts scheduled for replacement as required maintenance are warranted for the period of time up to the scheduled replacement time for that part. Parts replaced under this warranty are covered for the duration of the original product warranty and become the property of Toro. Toro will make the final decision whether to repair any existing part or assembly or replace it. Toro may use remanufactured parts for warranty repairs.

Deep Cycle and Lithium-Ion Battery Warranty:

Deep cycle and Lithium-Ion batteries have a specified total number of kilowatt-hours they can deliver during their lifetime. Operating, recharging, and maintenance techniques can extend or reduce total battery life. As the batteries in this product are consumed, the amount of useful work between charging intervals will slowly decrease until the battery is completely worn out. Replacement of worn out batteries, due to normal consumption, is the responsibility of the product owner. Battery replacement may be required during the normal product warranty period at owner's expense. Note: (Lithium-Ion battery only): A Lithium-Ion battery has a part only prorated warranty beginning year 3 through year 5 based on the time in service and kilowatt hours used. Refer to the *Operator's Manual* for additional information.

Maintenance is at Owner's Expense

Engine tune-up, lubrication, cleaning and polishing, replacement of filters, coolant, and completing recommended maintenance are some of the normal services Toro products require that are at the owner's expense.

General Conditions

Repair by an Authorized Toro Distributor or Dealer is your sole remedy under this warranty.

Neither The Toro Company nor Toro Warranty Company is liable for indirect, incidental or consequential damages in connection with the use of the Toro Products covered by this warranty, including any cost or expense of providing substitute equipment or service during reasonable periods of malfunction or non-use pending completion of repairs under this warranty. Except for the Emissions warranty referenced below, if applicable, there is no other express warranty. All implied warranties of merchantability and fitness for use are limited to the duration of this express warranty.

Some states do not allow exclusions of incidental or consequential damages, or limitations on how long an implied warranty lasts, so the above exclusions and limitations may not apply to you. This warranty gives you specific legal rights, and you may also have other rights which vary from state to state.

Note regarding engine warranty:

The Emissions Control System on your Product may be covered by a separate warranty meeting requirements established by the U.S. Environmental Protection Agency (EPA) and/or the California Air Resources Board (CARB). The hour limitations set forth above do not apply to the Emissions Control System Warranty. Refer to the Engine Emission Control Warranty Statement supplied with your product or contained in the engine manufacturer's documentation for details

Countries Other than the United States or Canada

Customers who have purchased Toro products exported from the United States or Canada should contact their Toro Distributor (Dealer) to obtain guarantee policies for your country, province, or state. If for any reason you are dissatisfied with your Distributor's service or have difficulty obtaining guarantee information, contact the Toro importer.

374-0253 Rev C