Form No. 3423-431 Rev B

TORO®

Count on it.

Parts Catalog

Power Max® 726 OE

Snowthrower

Model No. 38814—Serial No. 400000000 and Up

Register at www.Toro.com.
Original Instructions (EN)

CE

3423-431 B

Ordering Replacement Parts

To order replacement parts, please supply the part number, the quantity, and the description of each part desired.

Understanding Reference Numbers

Each identified part in an illustration has a reference number. The reference number for a part also appears in the parts list, along with other information about the part.

This catalog uses two special reference number formats, one to indicate parts in a service assembly and another to indicate the quantity of a given part in an illustration.

Service Assembly Reference Numbers

Parts in service assemblies have reference numbers in the form a:b. The a represents the reference number of the entire service assembly and the b represents a sequential number unique to each part within the service assembly.

For example, a wheel assembly might be identified by reference number 6, the tire by 6:1, the valve by 6:2, and the wheel by 6:3. When you order the assembly identified by reference number 6, you receive all parts identified by reference numbers 6:1,6:2, and 6:3. However, you may also order any part individually. Reference numbers of this type appear in illustration and in parts lists.

Reference Numbers Indicating Quantity

In an illustration, if a reference number indicates more than one part, the reference number has the form nX y. The n represents the quantity of the part, the X is the multiplication symbol, and the y represents the reference number.

For example, in an illustration, the reference number 2X 37 means that two of the parts identified by reference number 37 are indicated.

Contents

Frame Assembly 4
Pulley and Bellcrank Assembly 6
Impeller Drive Assembly 8
Wheel Assembly 10
Gearbox, Auger and Impeller Assembly 12
26 Inch Auger Gearcase Assembly No. 119-7641 14
Impeller Assembly 16
Engine Assembly 18
Engine Decal Assembly 20
Fuel System and Carburetor Assembly 22
Intake and Exhaust Assembly 24
Ignition Coil Assembly 26
Crankcase Assembly 28
Governor Assembly 30
Piston and Head Assembly 32
Blower Housing and Shrouds Assembly 34
Chute Assembly 36
Chute Control Assembly 38
Handle Assembly 40
Control Assembly 42
Attachments and Accessories 44

© 2018—The Toro® Company
8111 Lyndale Avenue South
Bloomington, MN 55420

Contact us at www.Toro.com.
Printed in the USA.
All Rights Reserved

Frame Assembly

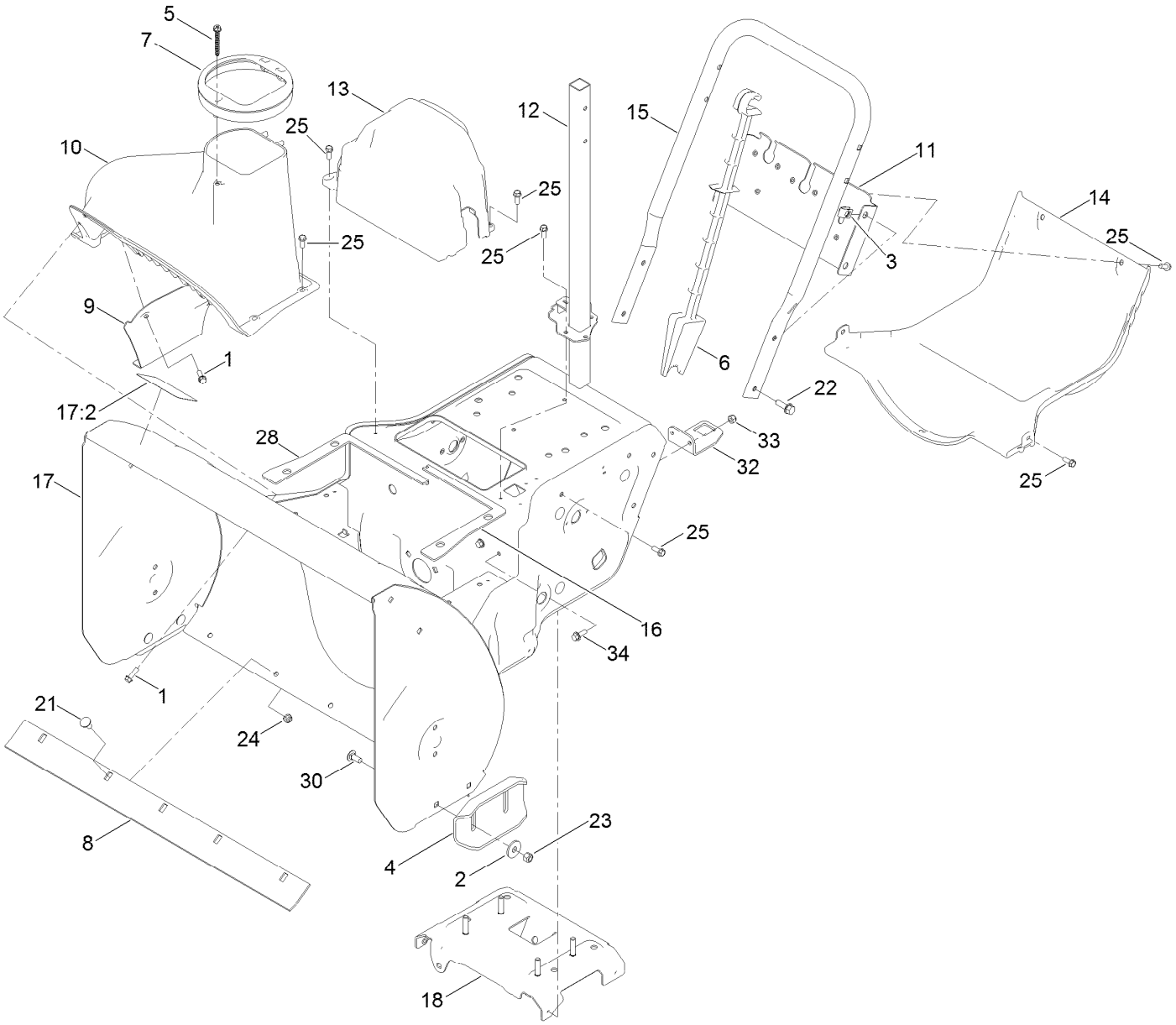

Frame Assembly (continued)

Ref.	Part Number	Qty.	Description
1	137-3099	6	Screw-Plastite, HWH
2	119-4150	4	Washer-Flat
3	94-2413	4	Nut-U
4	106-4588-01	2	Skid
5	137-3015	1	Screw-HWH, Plastite
6	121-6833	1	Stick-Cleanout
7	138-3608	1	Guide-Chute
8	119-7601-01	1	Scraper-24 Inch
9	120-7158-01	1	Cover-Liner
10	120-7159	1	Cover
11	120-7161-01	1	Brace-Frame
12	137-3412-03	1	Support-Chute
13	120-7177	1	Cover-Belt
14	120-7178	1	Cover-Lower
15	120-7179-03	1	Handle-Lower
16	120-7181	1	Seal-Housing, LH
17	131-6469	1	Frame ASM
17:2	121-6817	1	Decal-Danger, Auger
18	136-7187	1	Brace-Frame
21	137-3060	5	Bolt-CARR
22	137-3067	4	Screw-HHF
23	119-4038	4	Nut-Hex
24	137-3089	5	Nut-Hex
25	32144-85	17	Screw-HWH
28	121-6841	1	Seal-Housing, RH
30	137-3061	4	Bolt-CARR
32	137-3410-03	1	Bracket-Post, Chute
33	120-9678	2	Screw-HHF
34	137-3094	2	Nut-Hex

Pulley and Bellcrank Assembly

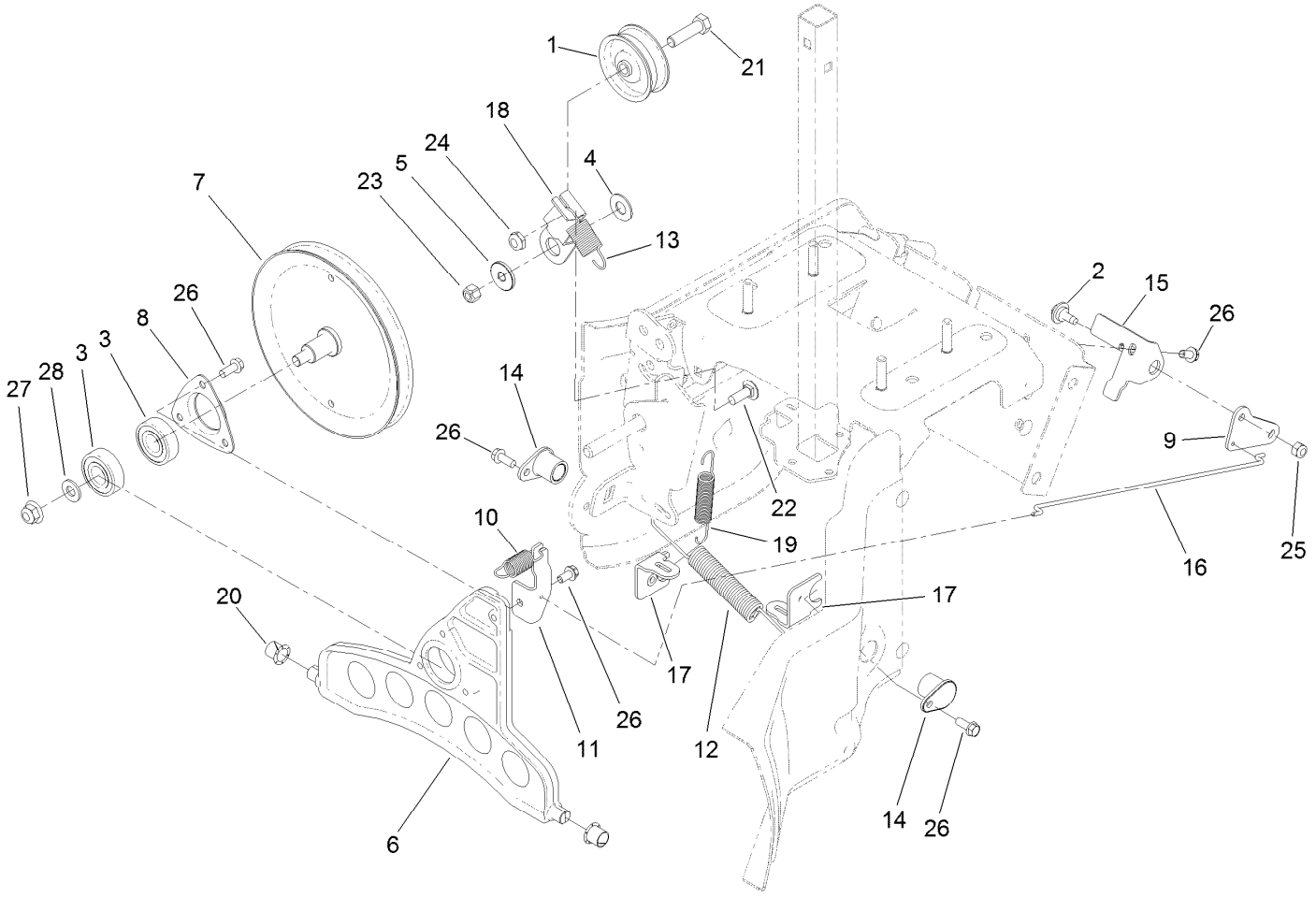

Pulley and Bellcrank Assembly (continued)

Ref.	Part Number	Qty.	Description
1	3-4244	1	Pulley-Idler
2	92-9698	1	Screw-Shoulder
3	38-7820	2	Bearing-Ball
4	25-5640	1	Washer
5	117-7711	1	Bushing-Idler
6	119-7645	1	Plate-Wheel, Friction
7	136-7152	1	Traction Pulley ASM
8	136-7124	1	Retainer-Bearing
9	119-7670-03	1	Bellcrank-Drive
10	136-7153	1	Spring-Extension
11	119-7679	1	Bracket-Plate, Traction
12	120-3883	1	Spring-Extension
13	137-3435	1	Spring-Extension
14	120-7156	2	Bushing-Plate, Traction
15	120-7165-03	1	Bracket-Bellcrank
16	136-7155	1	Link-Drive
17	120-9271	2	Bracket-Anchor, Spring
18	136-7159	1	Arm-Idler, Traction
19	120-9275	1	Spring-Extension
20	256-257	2	Bushing-Nyliner
21	137-3065	1	Screw-HH
22	137-3058	1	Bolt-CARR
23	119-4038	1	Nut-Hex
24	121-4600	1	Nut-Hex
25	137-3094	1	Nut-Hex
26	32144-85	7	Screw-HWH
27	119-4042	1	Nut-HF, NI
28	115-1166	1	Washer-Flat

Impeller Drive Assembly

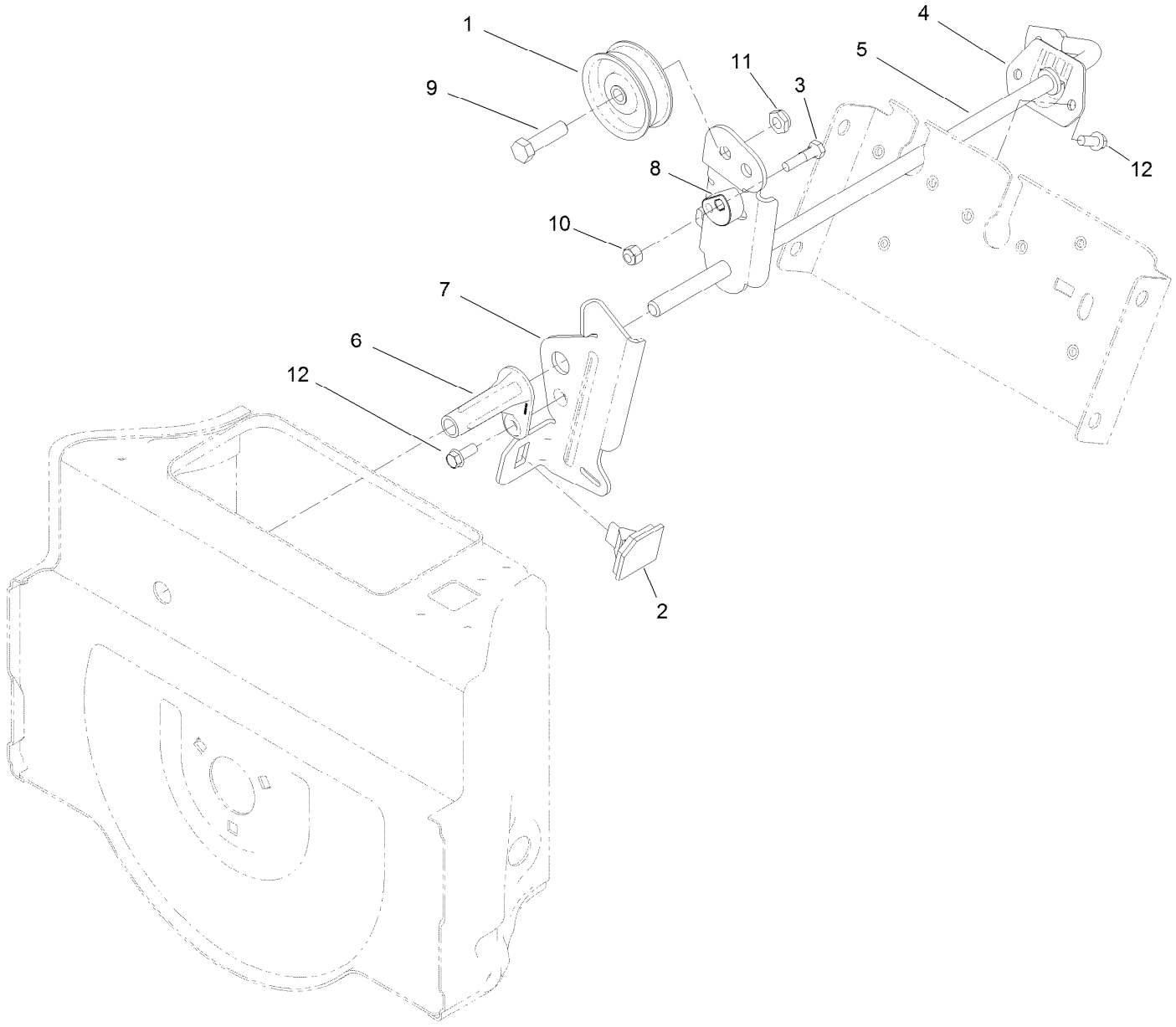

Impeller Drive Assembly (continued)

Ref.	Part Number	Qty.	Description
1	3-4244	1	Pulley-Idler
2	66-8060	1	Pad-Brake
3	136-8674	1	Bolt-Pivot, Eccentric
4	120-7167	1	Bushing-Rod, Clutch
5	120-9254-03	1	Impeller Clutch ASM
6	120-9256	1	Pivot-Brake, Impeller
7	120-9257-03	1	Arm-Brake, Impeller
8	120-9276	1	Eccentric-Brake, Impeller
9	137-3065	1	Screw-HH
10	137-3088	1	Nut-Hex
11	121-4600	1	Nut-Hex
12	32144-85	3	Screw-HWH

Wheel Assembly

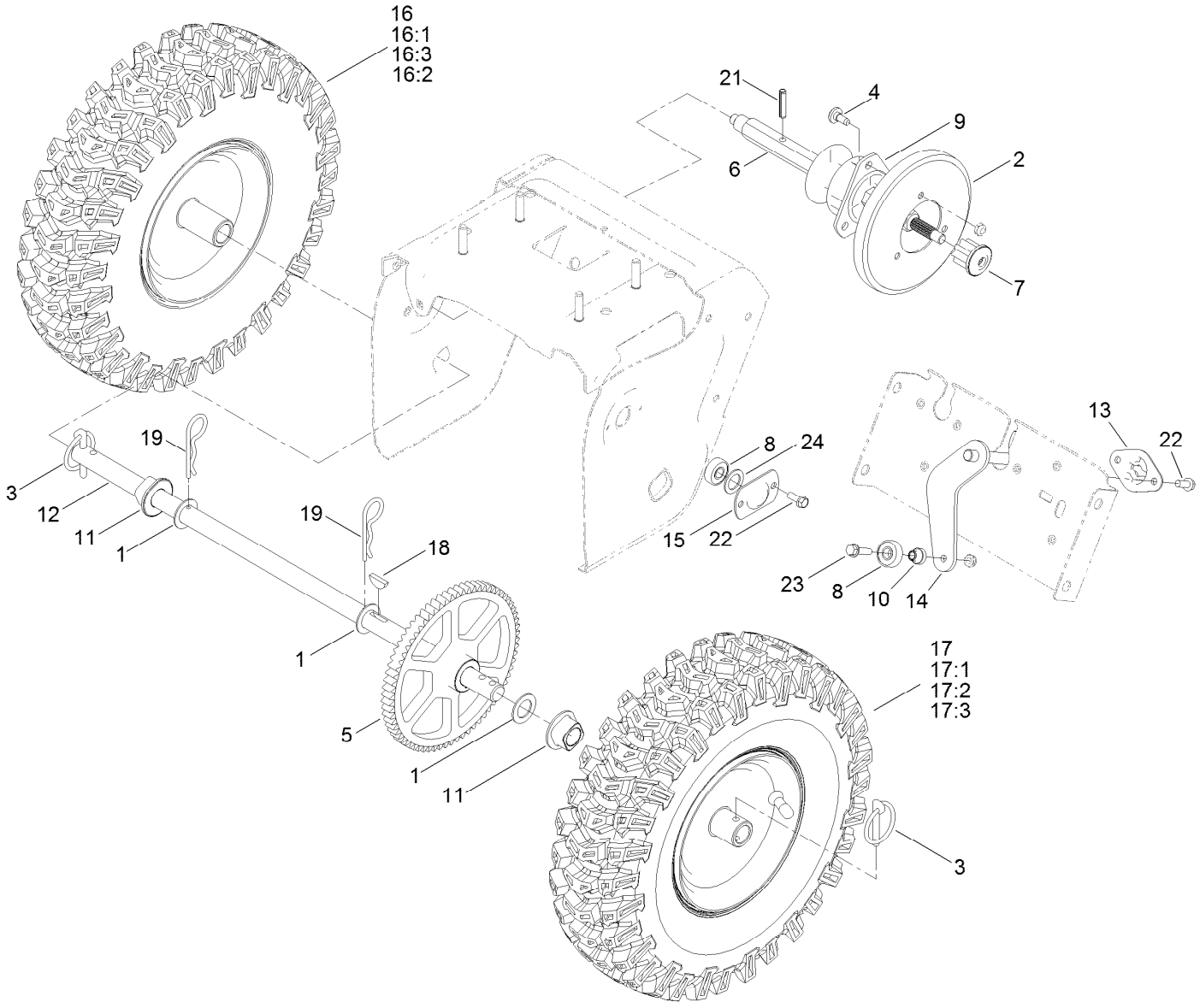

Wheel Assembly (continued)

Ref.	Part Number	Qty.	Description
1	3-8664	3	Washer-Thrust
2	119-1567	1	Wheel-Friction
3	107-3039	2	Klik Pin ASM
4	120-7950	3	Screw-Shoulder
5	119-7613	1	Gear-Axle
6	119-7615	1	Shaft-Hex
7	119-7616	1	Gear-Pinion, 8 Tooth
8	121-6835	3	Bearing-Ball
9	119-7630	1	Trunnion
10	119-7684	1	Spacer-Plate, Shift
11	120-7162	2	Bushing-Axle
12	120-7180	1	Axle
13	120-7191	1	Retainer-Plate, Shift
14	120-7193-03	1	Shift Plate ASM
15	136-7158	2	Retainer-Bearing
16	138-3660	1	LH Wheel And Tire ASM
16:1	138-3669	1	Wheel (15X4 Tire)
16:2	232-27	1	Stem-Valve
16:3	138-3668	1	Tire
17	138-3659	1	RH Wheel And Tire ASM
17:1	138-3669	1	Wheel (15X4 Tire)
17:2	232-27	1	Stem-Valve
17:3	138-3668	1	Tire
18	3257-7	1	Key-Woodruff
19	3290-343	2	Pin-Hair
21	32121-9	1	Pin-Roll, Slotted
22	32144-85	6	Screw-HWH
23	32144-86	1	Screw-HWHTF
24	121-6840	2	Washer-Rubber

Gearbox, Auger and Impeller Assembly

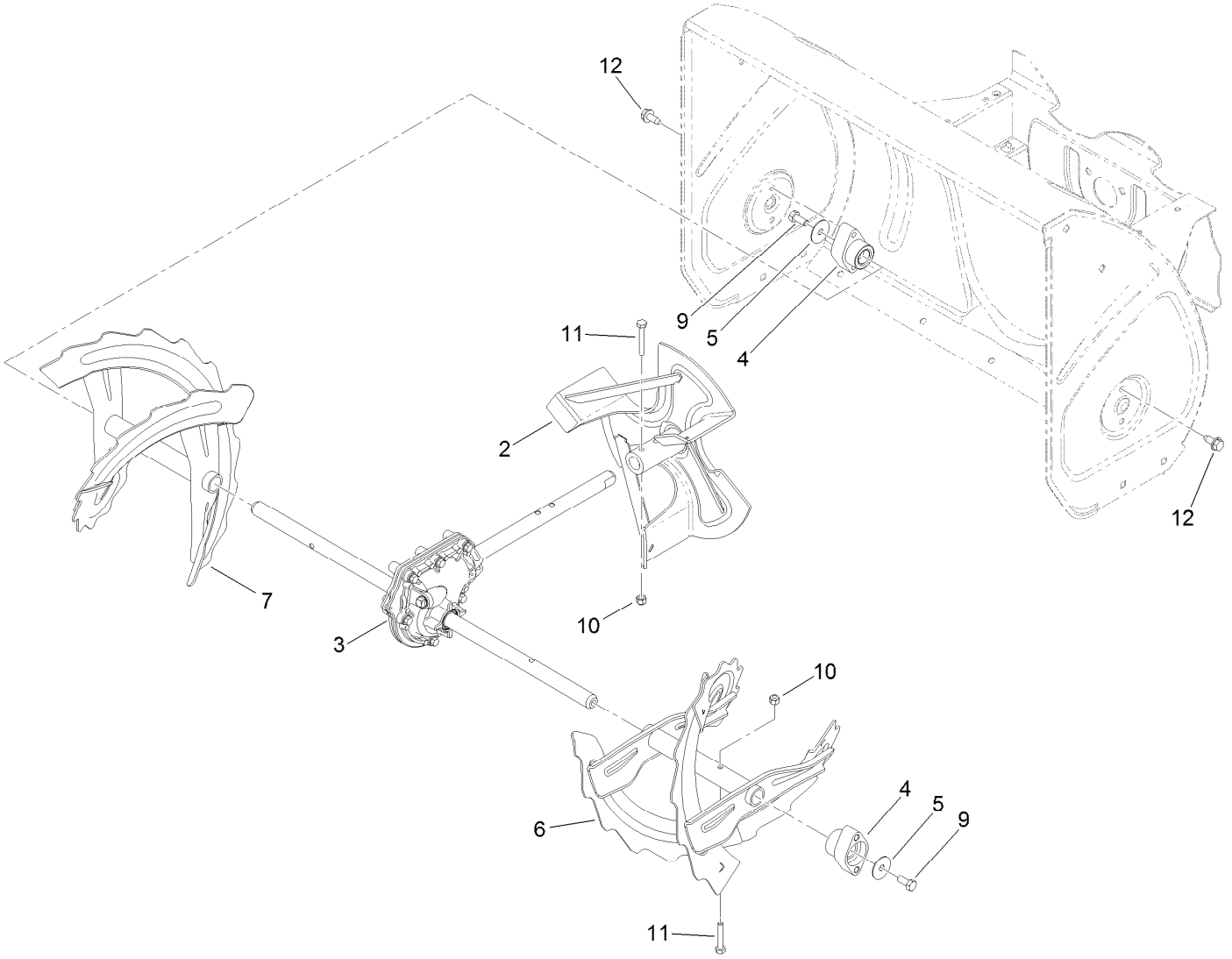

Gearbox, Auger and Impeller Assembly (continued)

Ref.	Part Number	Qty.	Description
2	119-7612-03	1	Impeller ASM
3	119-7641	1	Gearcase ASM
4	120-3860	2	Bearing-Auger
5	120-3862	2	Washer-Thrust
6	120-9287-03	1	LH Auger ASM
7	120-9290-03	1	RH Auger ASM
9	137-3052	2	Screw-HH
10	137-3088	4	Nut-Hex
11	05010	4	Bolt
12	32144-70	4	Screw-HWHTF

26 Inch Auger Gearcase Assembly No. 119-7641

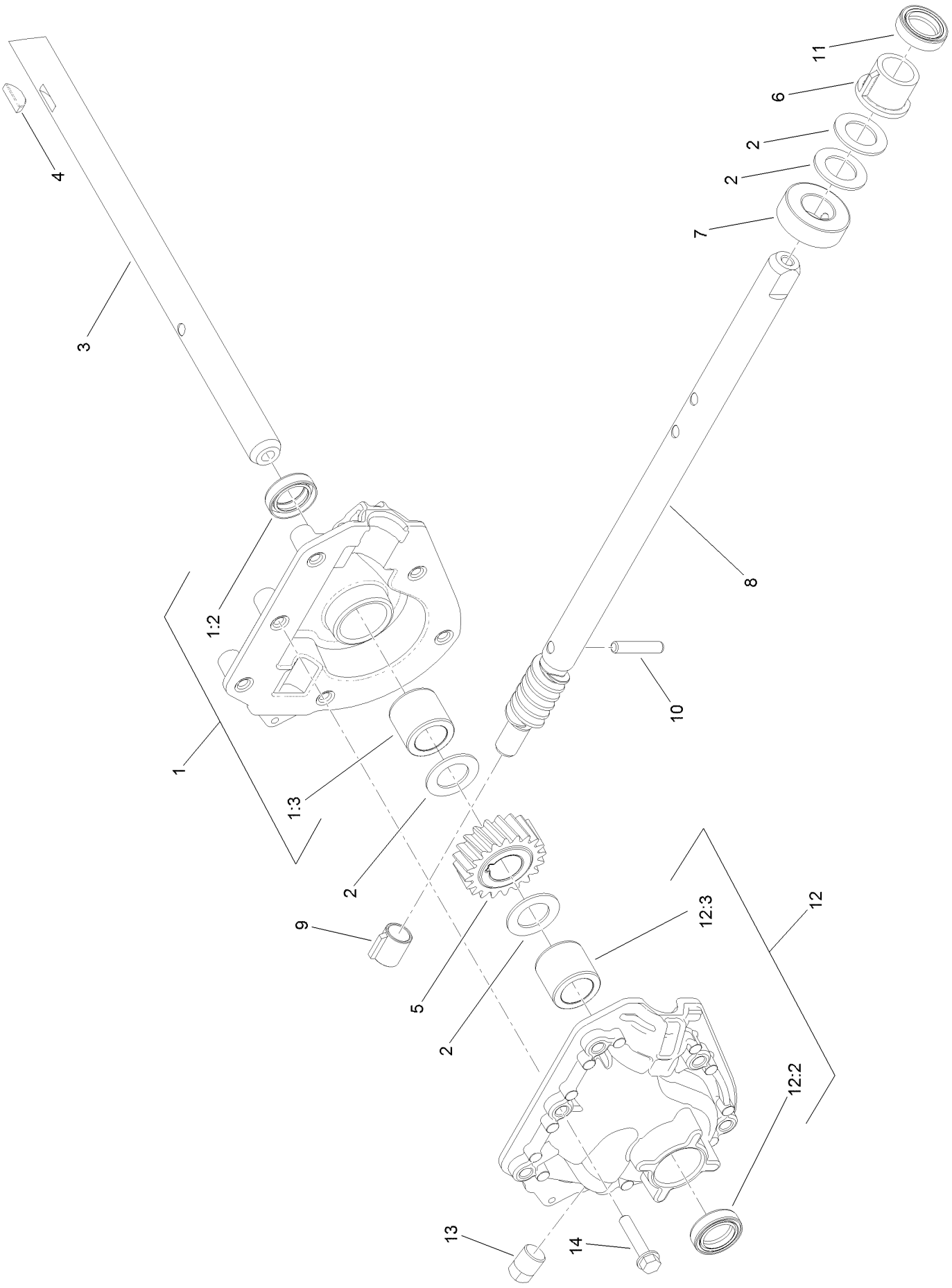

26 Inch Auger Gearcase Assembly No. 119-7641 (continued)

Ref.	Part Number	Qty.	Description
1	121-1209	1	RH Auger Gearcase ASM
1:2	121-6634	1	Seal-Shaft
1:3	120-9269	1	Bushing-Sleeve
2	119-7640	4	Washer-Thrust
3	119-7639	1	Shaft-Output, Auger
4	3257-5	1	Key-Woodruff
5	119-1576	1	Gear-Helical, 20 Tooth
6	119-7635	1	Bushing-Input
7	119-7636	1	Collar-Thrust
8	121-1234	1	Shaft-Impeller, Rolled
9	62-1150	1	Bushing-Worm
10	107-8899	1	Pin-Dowel
11	121-6634	1	Seal-Shaft
12	121-1210	1	LH Auger Gearcase ASM
12:2	121-6634	1	Seal-Shaft
12:3	120-9269	1	Bushing-Sleeve
13	121-6832	1	Plug-Pipe, SQH
14	108-4862	6	Screw-HWHTF

Impeller Assembly

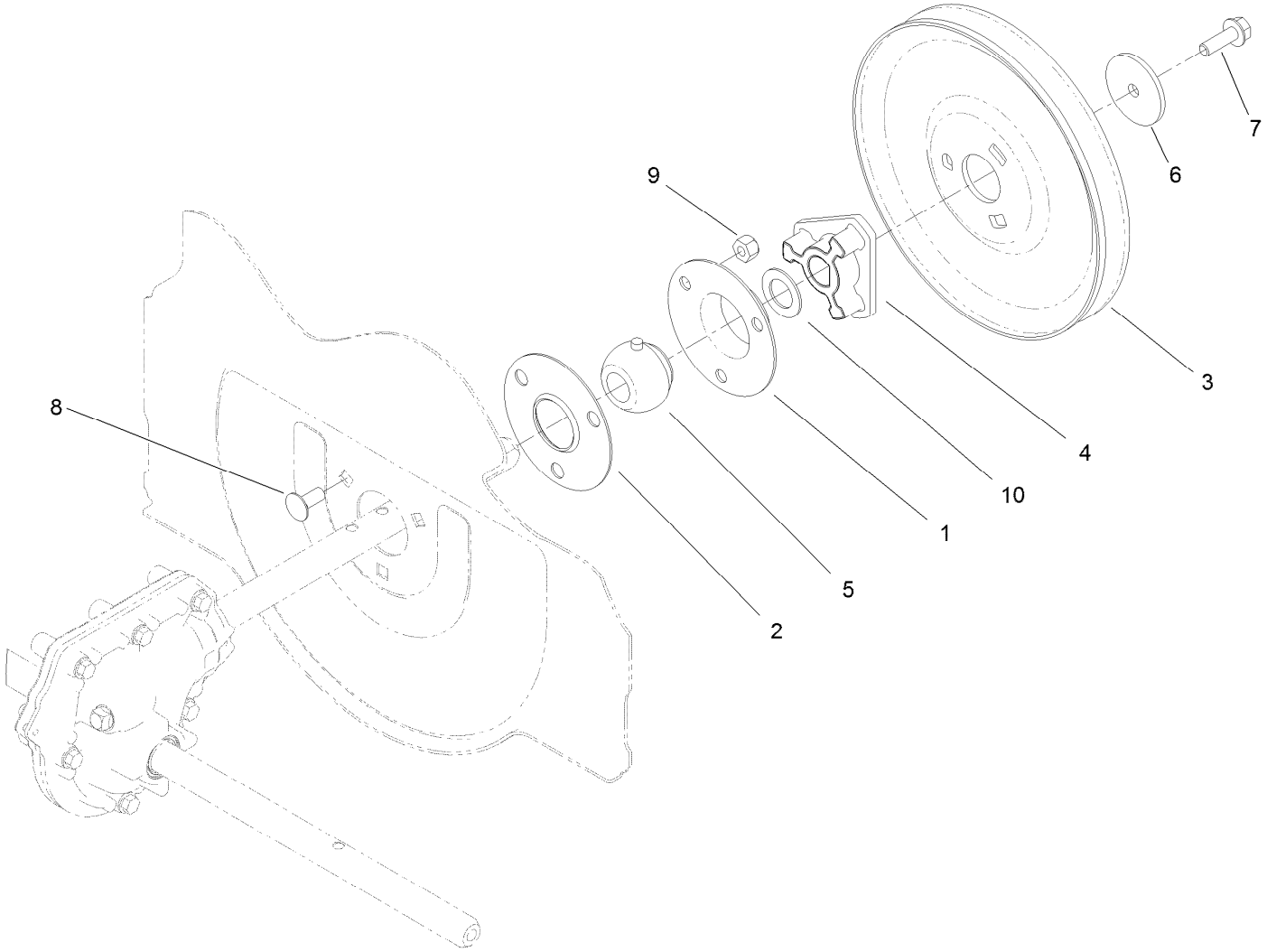

Impeller Assembly (continued)

Ref.	Part Number	Qty.	Description
1	26-6110	1	Flange-Cup, Bearing
2	26-6120	1	Flange-Cup, Bearing
3	136-7157	1	Pulley-Impeller
4	120-9264	1	Hub-Impeller, Pulley
5	120-9272	1	Bearing
6	137-3121	1	Washer-Plain
7	115-5142	1	Screw-HHF
8	137-3061	3	Bolt-CARR
9	119-4038	3	Nut-Hex
10	119-7640	1	Washer-Thrust

Engine Assembly

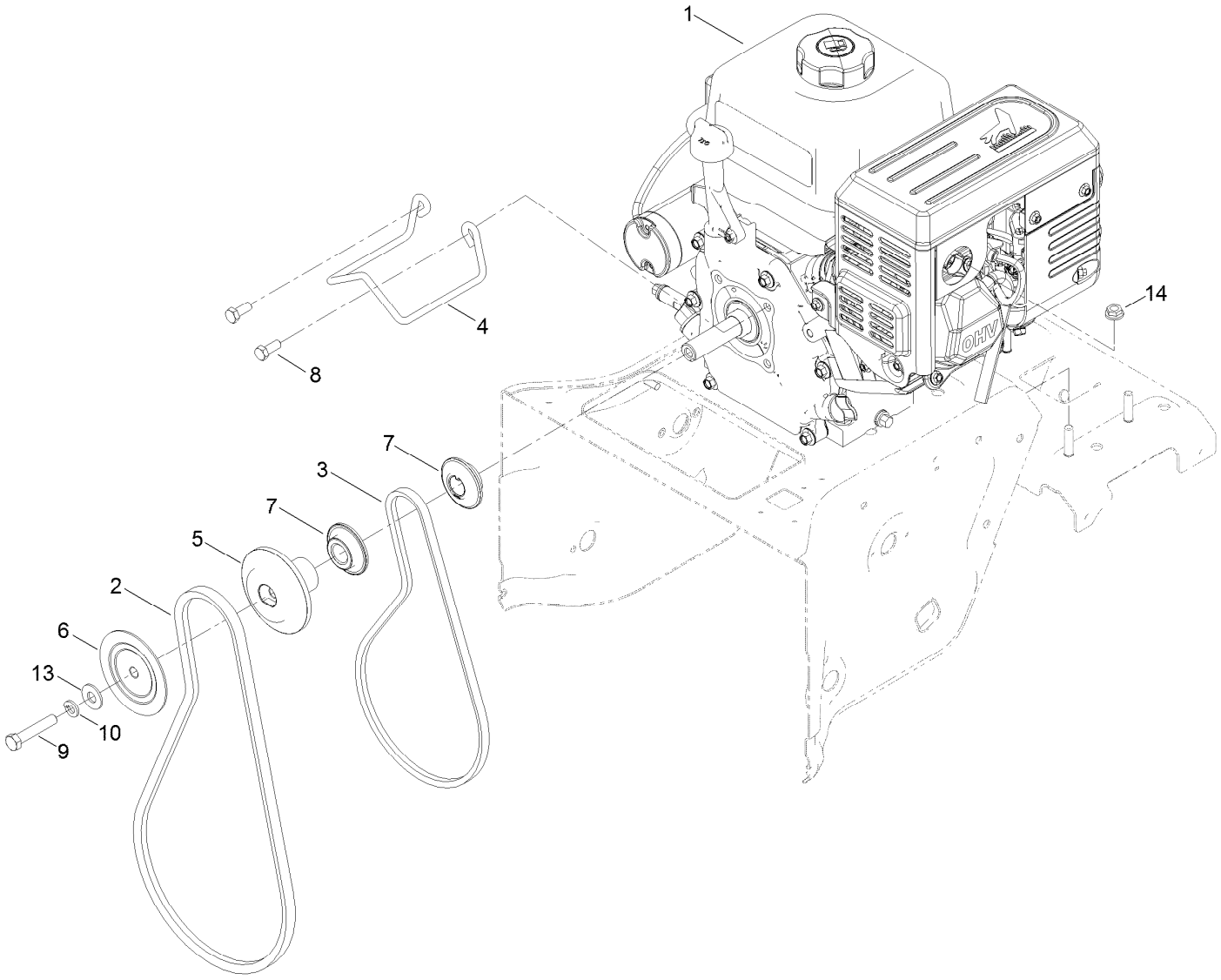

Engine Assembly (continued)

Ref.	Part Number	Qty.	Description
1	127-9035	1	Engine-G210Fds-1
2	120-3892	1	Belt-V
3	120-3893	1	Belt-V
4	136-7156	1	Guide-Belt
5	120-9283	1	Pulley-Auger, Rear
6	120-9284	1	Pulley-Auger, Front
7	137-3400	2	Pulley-Engine, Traction
8	138-0690	2	Screw-HH
9	120-2302	1	Screw-HH
10	3253-21	1	Washer-Lock
13	137-3078	1	Washer-Plain
14	137-3039	4	Nut-HF

Engine Decal Assembly

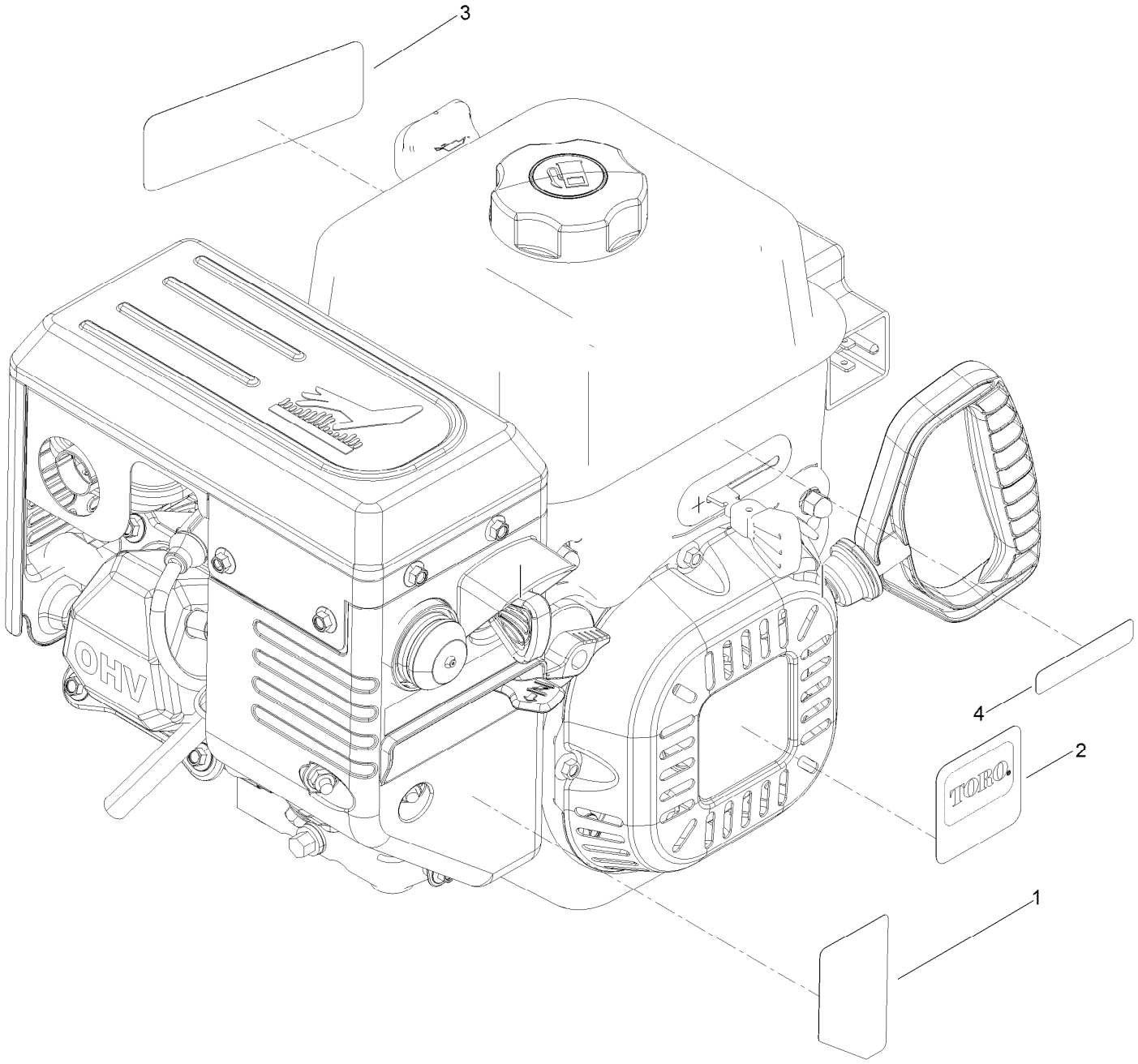

Engine Decal Assembly (continued)

Ref.	Part Number	Qty.	Description
1	120-9805	1	Decal-Control, Engine
2	120-9806	1	Decal-Engine, Series G210
3	120-9809	1	Decal-Recoil, G210
4	131-6487	1	Decal-Throttle

Fuel System and Carburetor Assembly

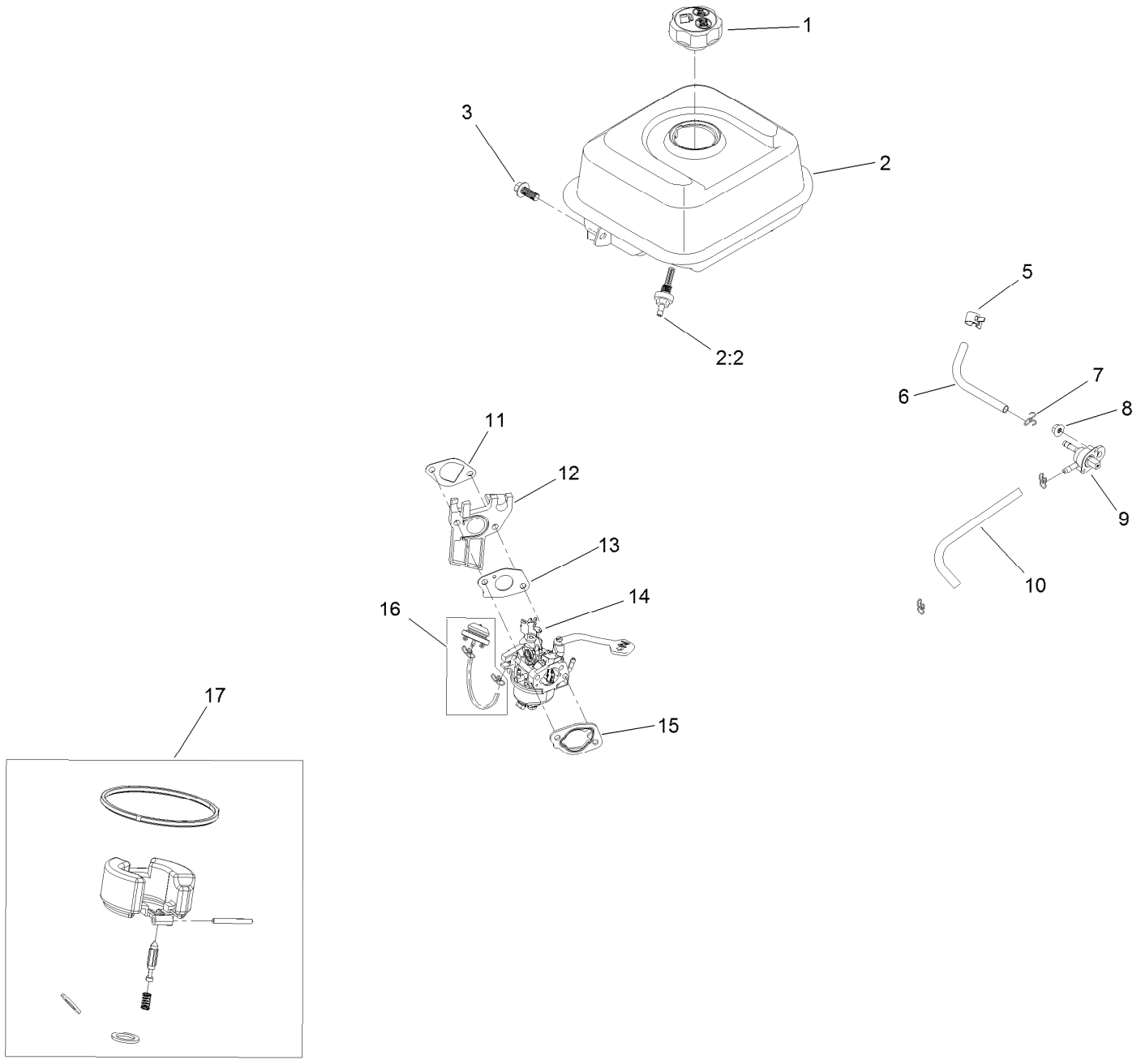

Fuel System and Carburetor Assembly (continued)

Ref.	Part Number	Qty.	Description
1	133-9823	1	Cap-Fuel
2	127-9497	1	Fuel Tank And Filter ASM
2:2	127-9065	1	Filter-Fuel
3	121-0294	1	Screw-HHF
5	127-9120	1	Clamp-Hose
6	127-9118	1	Hose-Fuel, Formed
7	121-0087	3	Clamp-Hose
8	120-4236	1	Nut-Flange
9	127-9117	1	Valve-Fuel
10	127-9384	1	Hose-Fuel, Formed
11	121-0076	1	Gasket-Carburetor
12	121-0077	1	Insulator-Carburetor
13	121-0078	1	Gasket-Carburetor
14	127-9111	1	Carburetor ASM
15	121-0080	1	Gasket-Carburetor
16	127-9079	1	Primer Kit
17	127-9394	1	Internal Carb Service Kit
99	127-9301	1	High Altitude Kit - G210 ●

● Not illustrated

Intake and Exhaust Assembly

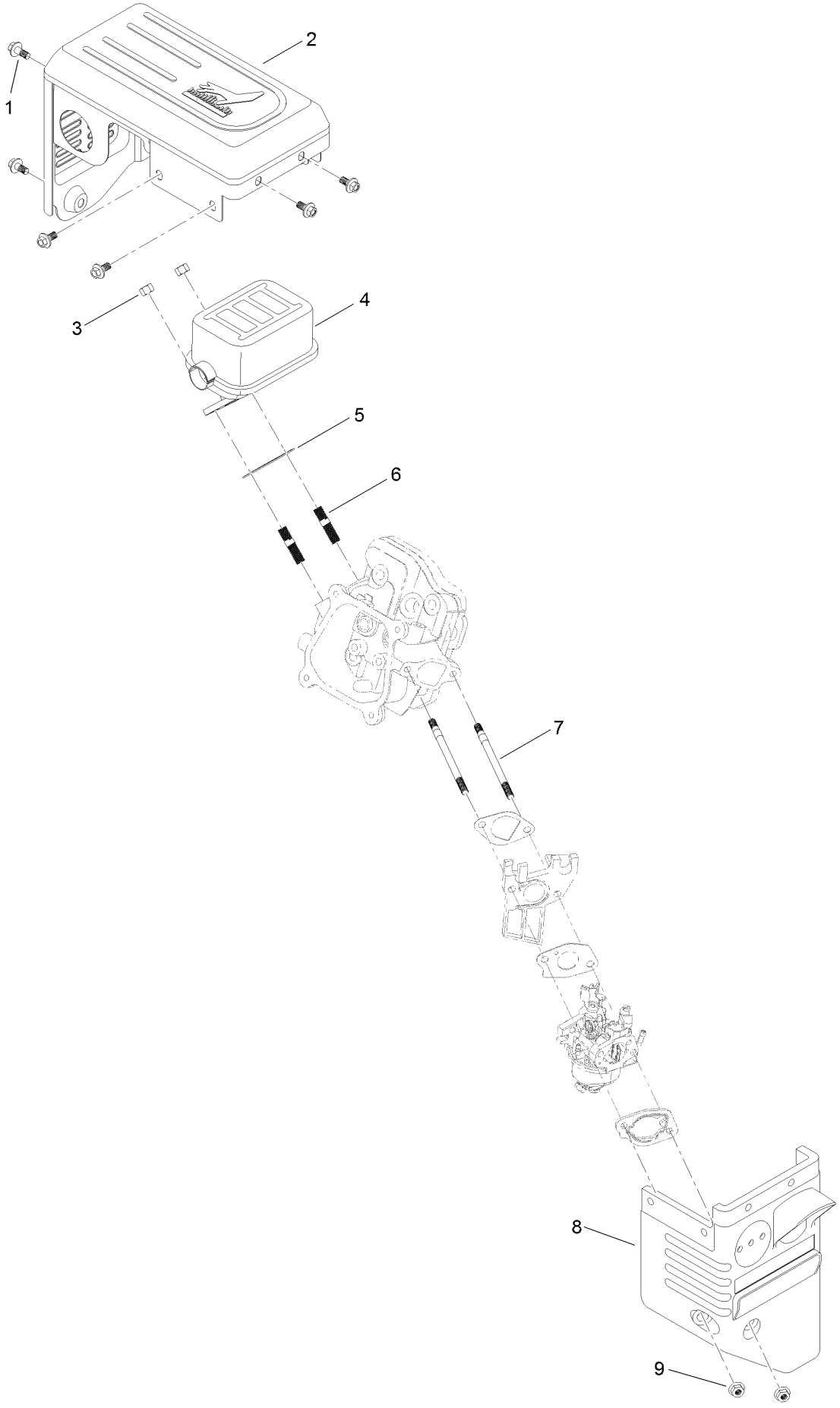

Intake and Exhaust Assembly (continued)

Ref.	Part Number	Qty.	Description
1	121-0294	6	Screw-HHF
2	136-7779	1	Guard-Muffler
3	121-0199	2	Nut-HH
4	127-9128	1	Muffler ASM
5	121-0167	1	Gasket-Exhaust
6	121-0464	2	Stud-Exhaust
7	121-4112	2	Stud-Intake
8	127-9112	1	Box-Heater
9	121-0308	2	Nut-Flange

Ignition Coil Assembly

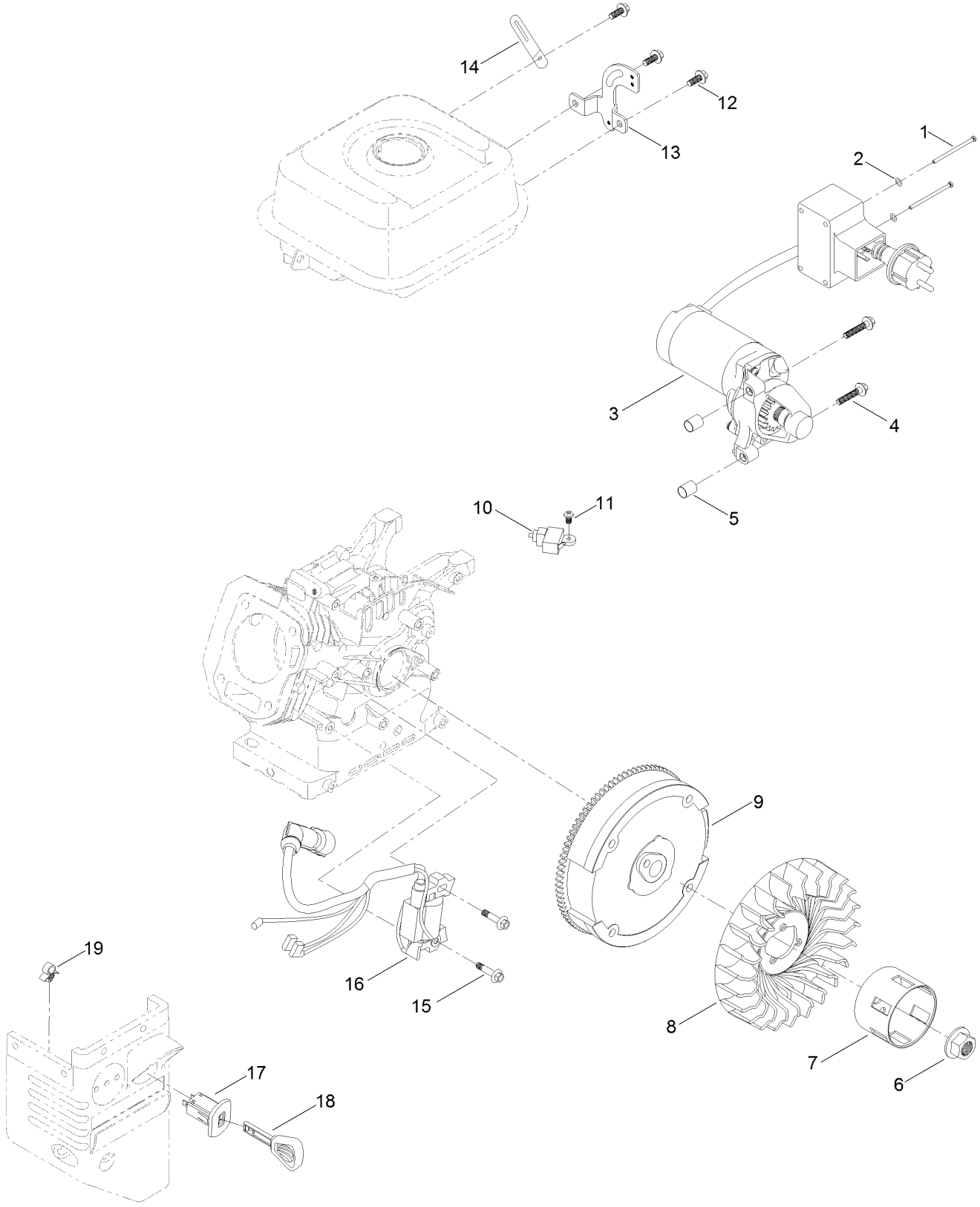

Ignition Coil Assembly (continued)

Ref.	Part Number	Qty.	Description
1	121-0306	2	Screw-Bhp
2	121-0312	2	Washer-Plain
3	136-7777	1	Motor-Starter
4	133-1546	2	Screw-Flange
5	121-0055	2	Pin-Dowel
6	121-0047	1	Nut-Flange
7	127-9106	1	Cup-Starter
8	127-9002	1	Fan
9	127-9005	1	Flywheel
10	121-0284	1	Switch-Kill, Engine
11	120-4461	1	Screw-PPH
12	127-9123	3	Screw-HHF
13	127-9124	1	Bracket
14	121-0017	1	Clip-Harness, Wire
15	121-0097	2	Screw-HHF
16	133-9996	1	Ignition Coil ASM
17	121-0283	1	Switch-Key
18	117-7728	1	Key
19	121-0326	1	Clip

Crankcase Assembly

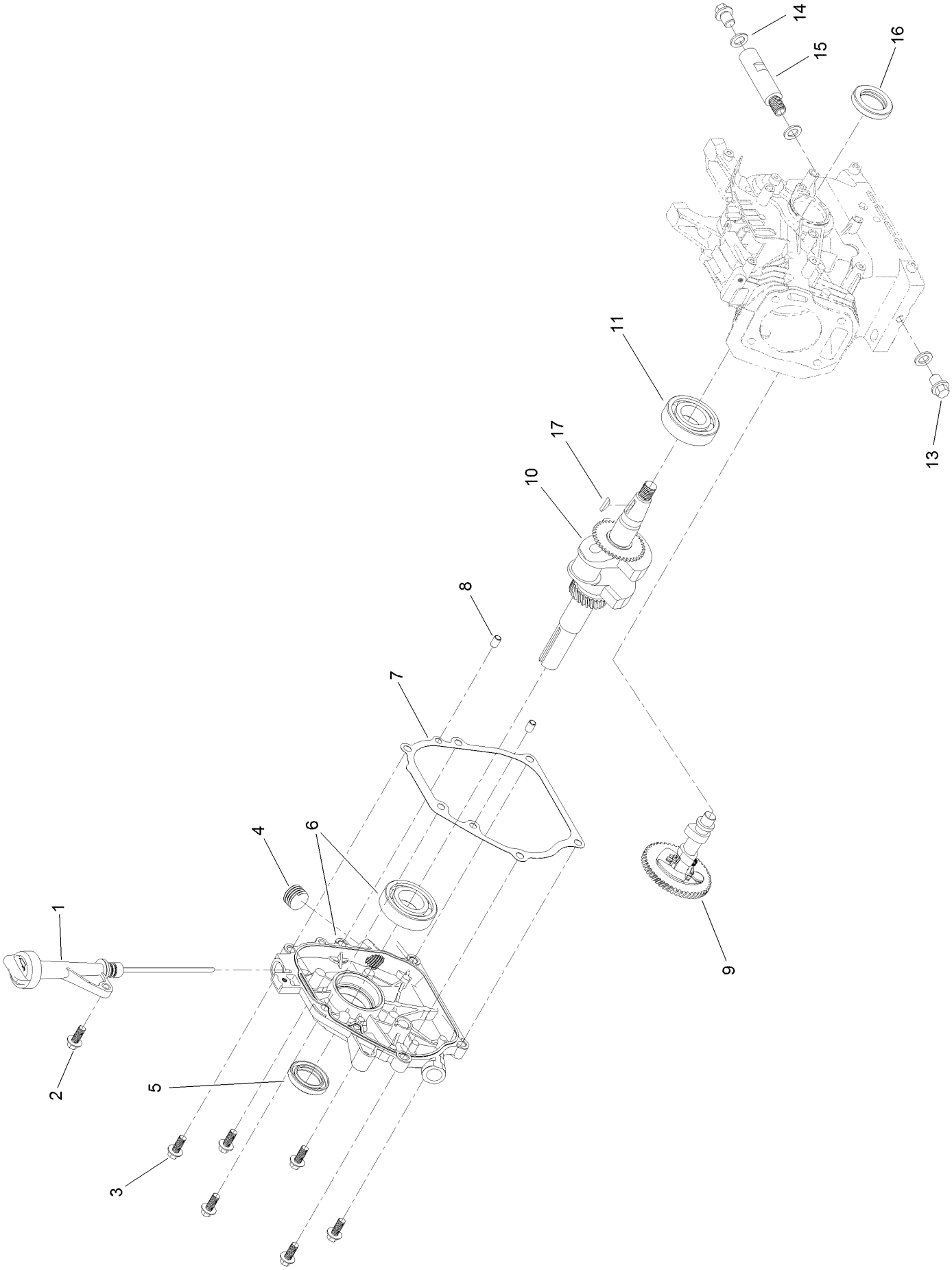

Crankcase Assembly (continued)

Ref.	Part Number	Qty.	Description
1	133-9837	1	Oil Fill ASM
2	127-9123	1	Screw-HHF
3	121-4114	6	Screw-HHF
4	133-9805	1	Plug-Drain
5	121-0209	1	Seal-Oil
6	133-9835	1	Crankcase Cover ASM
7	121-0105	1	Gasket-Cover, Crankcase
8	121-0054	2	Pin-Dowel
9	133-9836	1	Camshaft
10	127-9496	1	Crankshaft
11	121-0056	1	Bearing-Ball
13	121-0030	2	Screw-HHF
14	121-0048	3	Washer-Plain
15	127-9104	1	Tube-Drain, Oil
16	121-0208	1	Seal-Oil
17	120-4320	1	Key-Woodruff

Governor Assembly

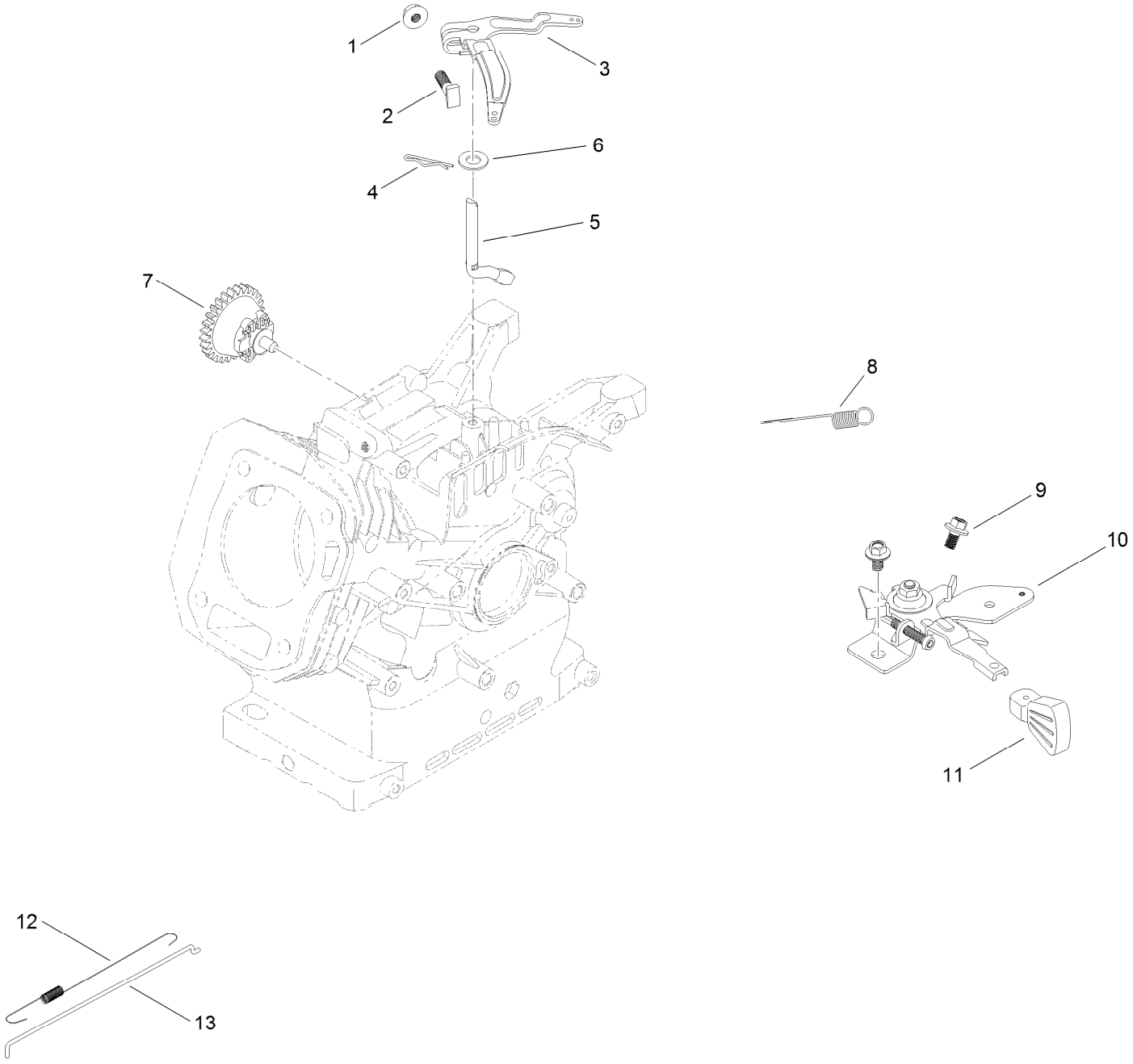

Governor Assembly (continued)

Ref.	Part Number	Qty.	Description
1	120-4236	1	Nut-Flange
2	120-4238	1	Bolt-Arm, Governor
3	127-9102	1	Arm-Governor
4	120-4256	1	Pin-Hair
5	136-7763	1	Shaft-Governor
6	121-0498	1	Washer-Plain
7	133-9994	1	Governor Gear ASM
8	127-9114	1	Spring-Governor
9	121-0118	2	Screw-HHF
10	127-9113	1	Speed Control ASM
11	121-0269	1	Knob-Control, Throttle
12	121-0153	1	Spring-Return, Throttle
13	121-0148	1	Rod-Governor

Piston and Head Assembly

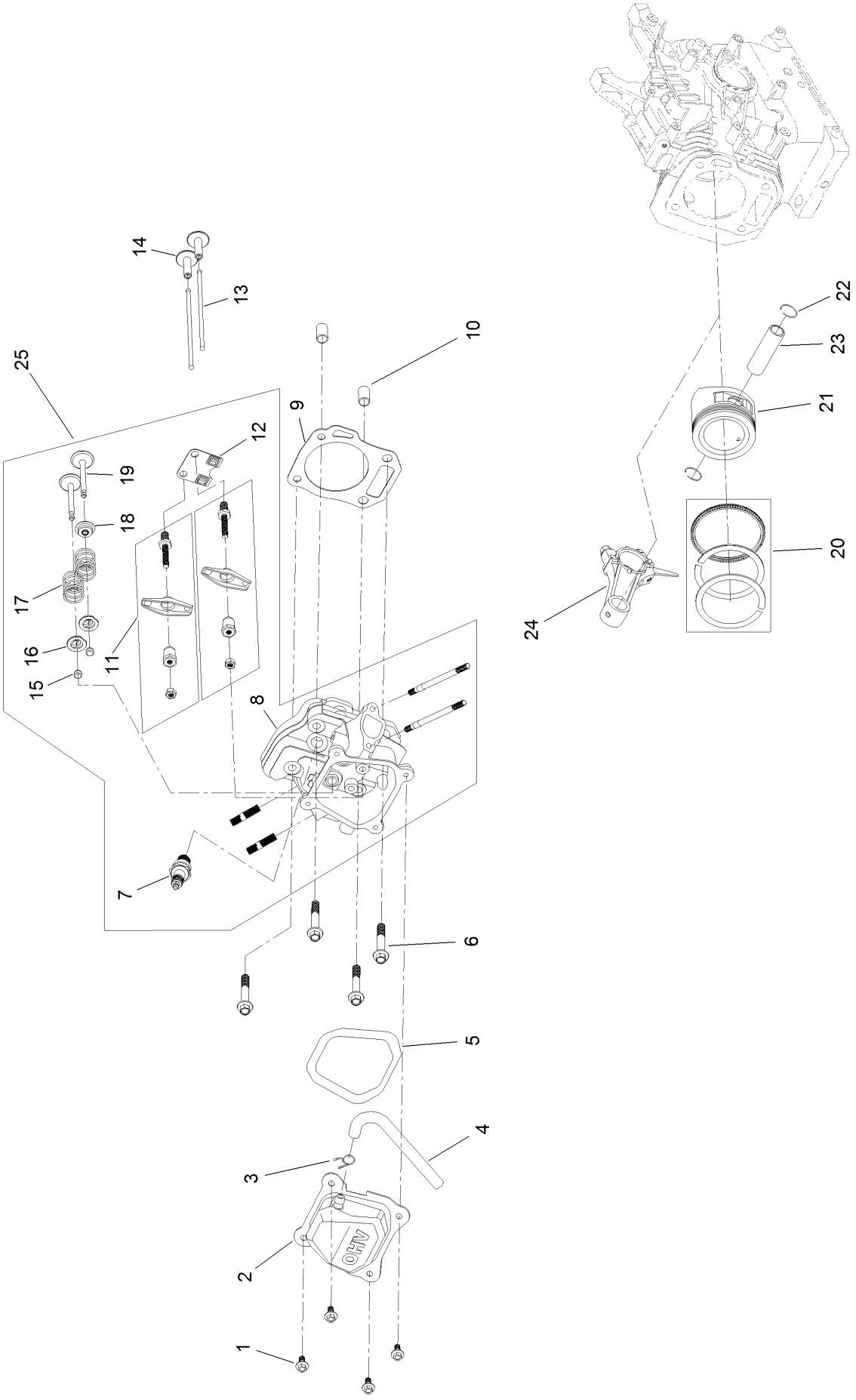

Piston and Head Assembly (continued)

Ref.	Part Number	Qty.	Description
1	120-4454	4	Screw-HHF
2	127-9094	1	Cover-Valve
3	127-9408	1	Clamp-Hose
4	127-9095	1	Tube-Breather
5	121-0109	1	Gasket-Cover, Valve
6	121-4110	4	Screw-HHF
7	81-3250	1	Spark Plug
8	127-9013	1	Head-Cylinder
9	127-9000	1	Gasket-Head, Cylinder
10	121-0053	2	Pin-Dowel
11	120-4475	2	Rocker Arm ASM
12	121-4120	1	Plate-Guide, Push Rod
13	121-4121	2	Rod-Push
14	127-9015	2	Tappet-Valve
15	121-4116	2	Rotator-Valve
16	121-4117	2	Retainer-Spring, Valve
17	127-9014	2	Spring-Valve
18	121-4202	1	Seal-Stem, Valve
19	127-9016	1	Valve Set
20	121-4295	1	Ring Set, Piston
21	121-4293	1	Piston
22	121-0313	2	Clip-Pin, Piston
23	121-4128	1	Pin-Piston
24	127-9017	1	Connecting Rod ASM
25	133-9839	1	Complete Head ASM

Blower Housing and Shrouds Assembly

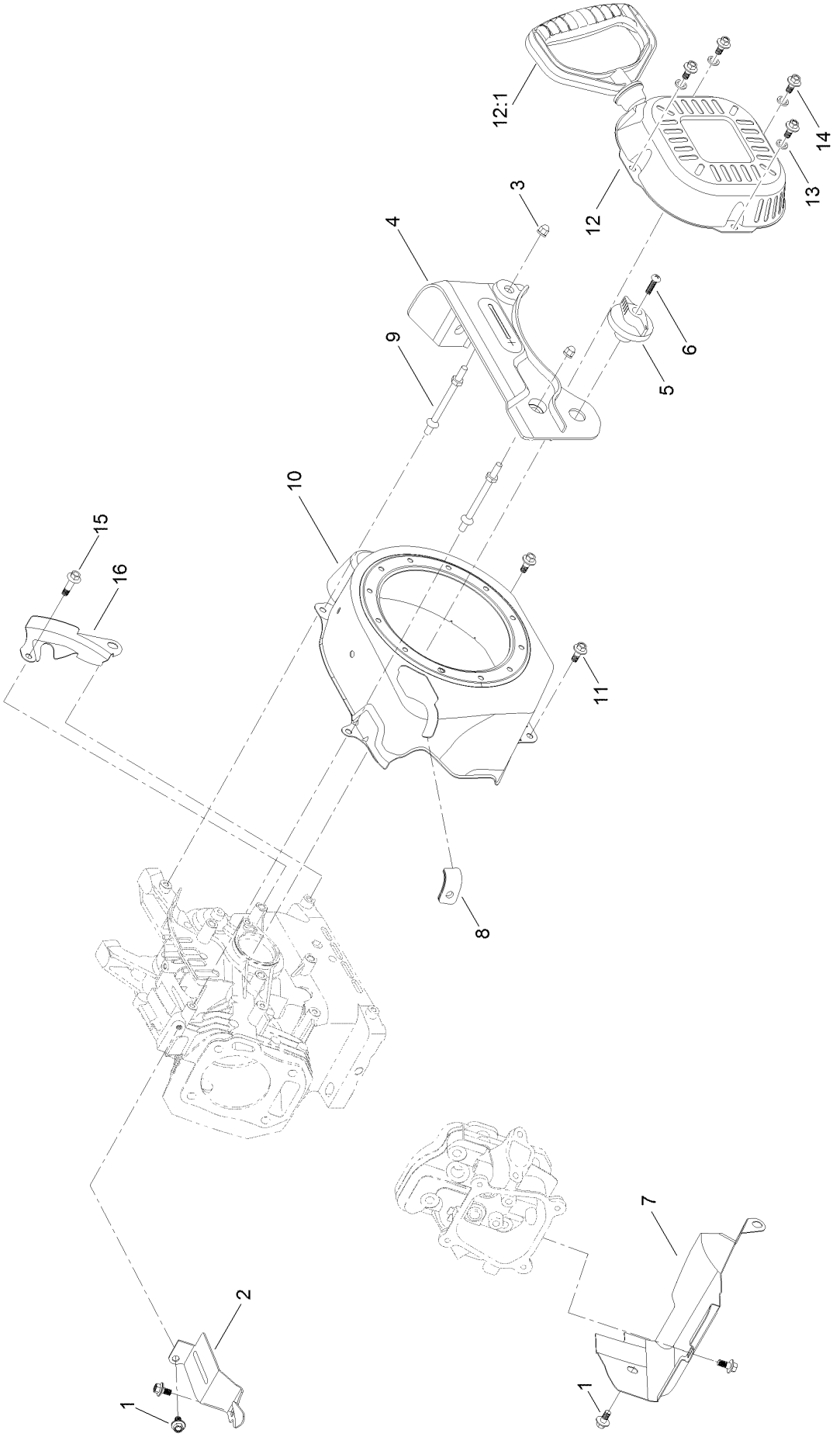

Blower Housing and Shrouds Assembly (continued)

Ref.	Part Number	Qty.	Description
1	121-0118	4	Screw-HHF
2	127-9097	1	Baffle
3	127-9383	2	Nut-Acorn
4	127-9116	1	Panel-Control
5	121-0268	1	Knob-Valve, Fuel
6	121-0305	1	Screw-Bhp
7	127-9096	1	Shroud-Lower
8	127-9107	1	Block-Rubber
9	127-9110	2	Stud-Mount
10	127-9108	1	Shroud-Blower
11	121-0294	2	Screw-HHF
12	127-9109	1	Recoil Starter ASM
12:1	121-0287	1	Handle-Recoil
13	127-9380	4	Washer-Plain
14	127-9031	4	Screw-HHF
15	120-4454	1	Screw-HHF
16	127-9121	1	Shield-Flywheel

Chute Assembly

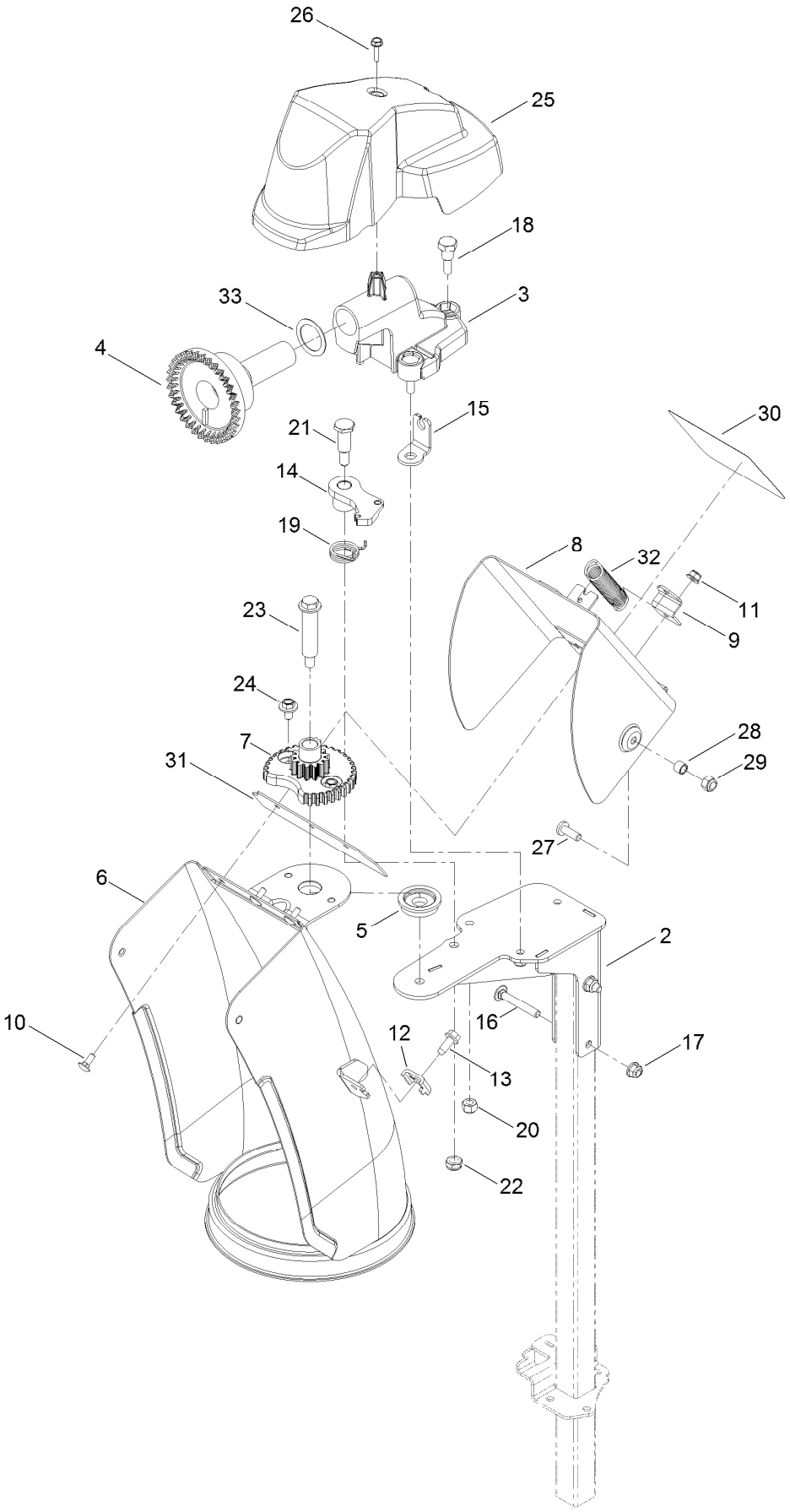

Chute Assembly (continued)

Ref.	Part Number	Qty.	Description
2	138-3605-03	1	Support-Chute
3	138-3606	1	Mount-Gear, Face
4	106-4471	1	Gear-Face
5	106-4422	1	Spacer-Chute
6	138-3611-01	1	Chute Weld ASM
7	106-4472	1	Gear-Chute
8	138-3615-01	1	Deflector Weld ASM
9	138-3612-01	1	Bracket-Spring
10	135-1929	3	Bolt-CARR
11	138-0719	3	Nut-HF
12	136-7191	1	Clamp-Cable
13	137-3043	1	Screw-HWH
14	106-4476	1	Latch-Chute
15	138-3607	1	Anchor-Cable
16	120-9698	2	Bolt-CARR
17	119-4040	2	Nut-Flange, NI
18	136-7197	3	Screw-Shoulder
19	108-7315	1	Spring-Torsion
20	137-3088	3	Nut-Hex
21	137-3103	1	Screw-Shoulder, HH
22	137-3089	3	Nut-Hex
23	136-7199	3	Bolt-Shoulder
24	46-6810	2	Screw And Washer ASM
25	138-3627	1	Cover-Chute, Gear
26	98-1375	1	Screw-HWH
27	138-0689	1	Screw-PH
28	138-3678	1	Spacer
29	137-3094	1	Nut-Hex
30	137-6198	1	Decal-Danger
31	138-3671	1	Gasket-Deflector
32	138-8493	1	Spring-Chute, Upper
33	74-1810	1	Washer

Chute Control Assembly

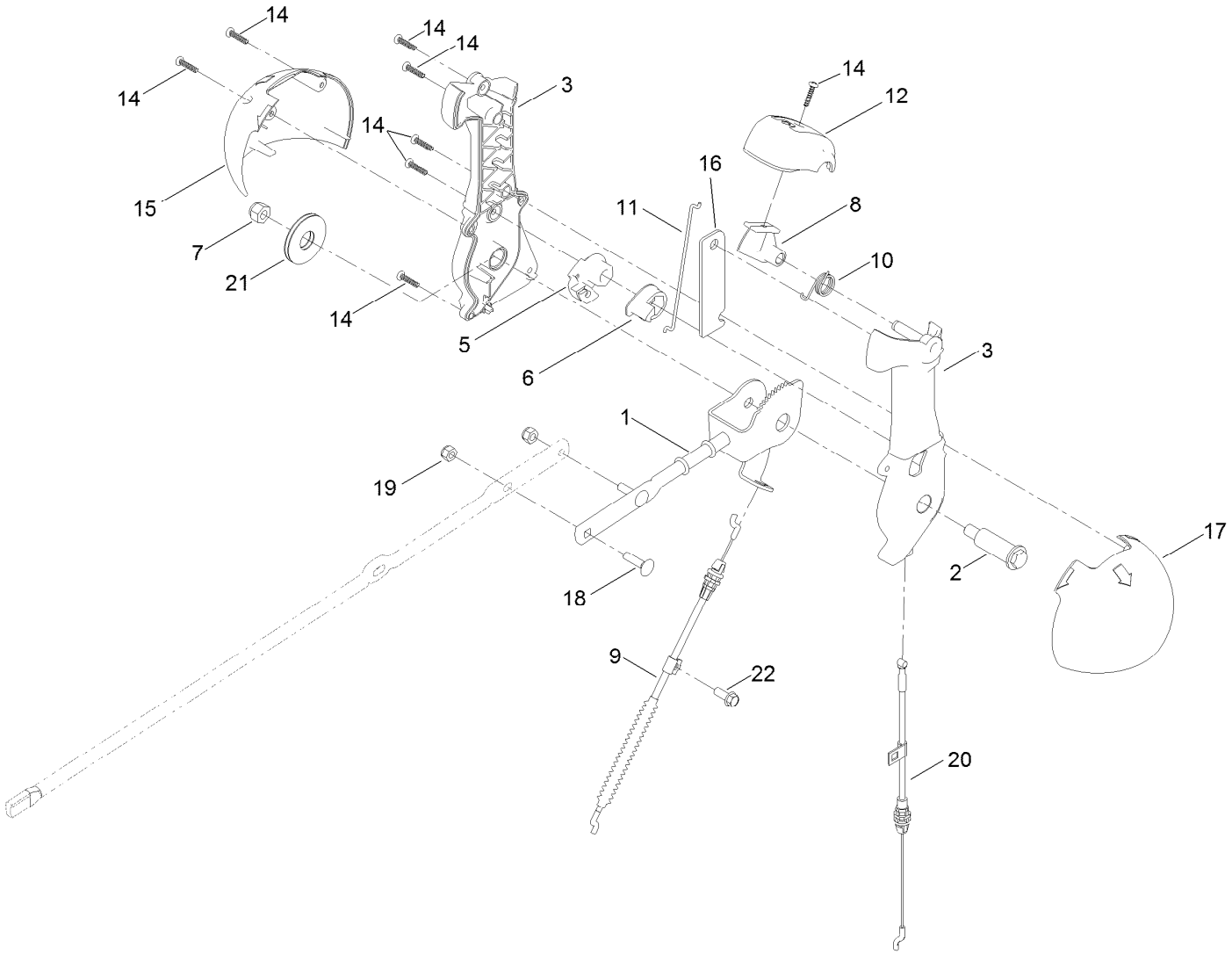

Chute Control Assembly (continued)

Ref.	Part Number	Qty.	Description
1	138-0662	1	Rod-Control, Chute
2	138-0659	1	Screw-Shoulder, HWH
3	139-1552	1	Chute Control Lever ASM
5	105-9988	1	Lever-Cable, Deflector
6	106-7310	1	Pawl-Latch
7	137-3087	1	Nut-Hex
8	137-6238	1	Trigger-Latch
9	138-3672	1	Cable-Control, Deflector
10	105-9982	1	Spring-Torsion
11	138-0688	1	Link-Latch
12	137-6239	1	Cap-Lever
14	94-4496	8	Screw-PPH
15	136-6677	1	Globe-Quickstick, RH
16	136-6632	1	Plate-Stiffner
17	136-6678	1	Globe-Quickstick, LH
18	137-3056	3	Bolt-CARR
19	137-3094	3	Nut-Hex
20	138-3673	1	Cable-Release, Chute
21	138-0744	1	Washer-Friction, Composite
22	32144-85	1	Screw-HWH

Handle Assembly

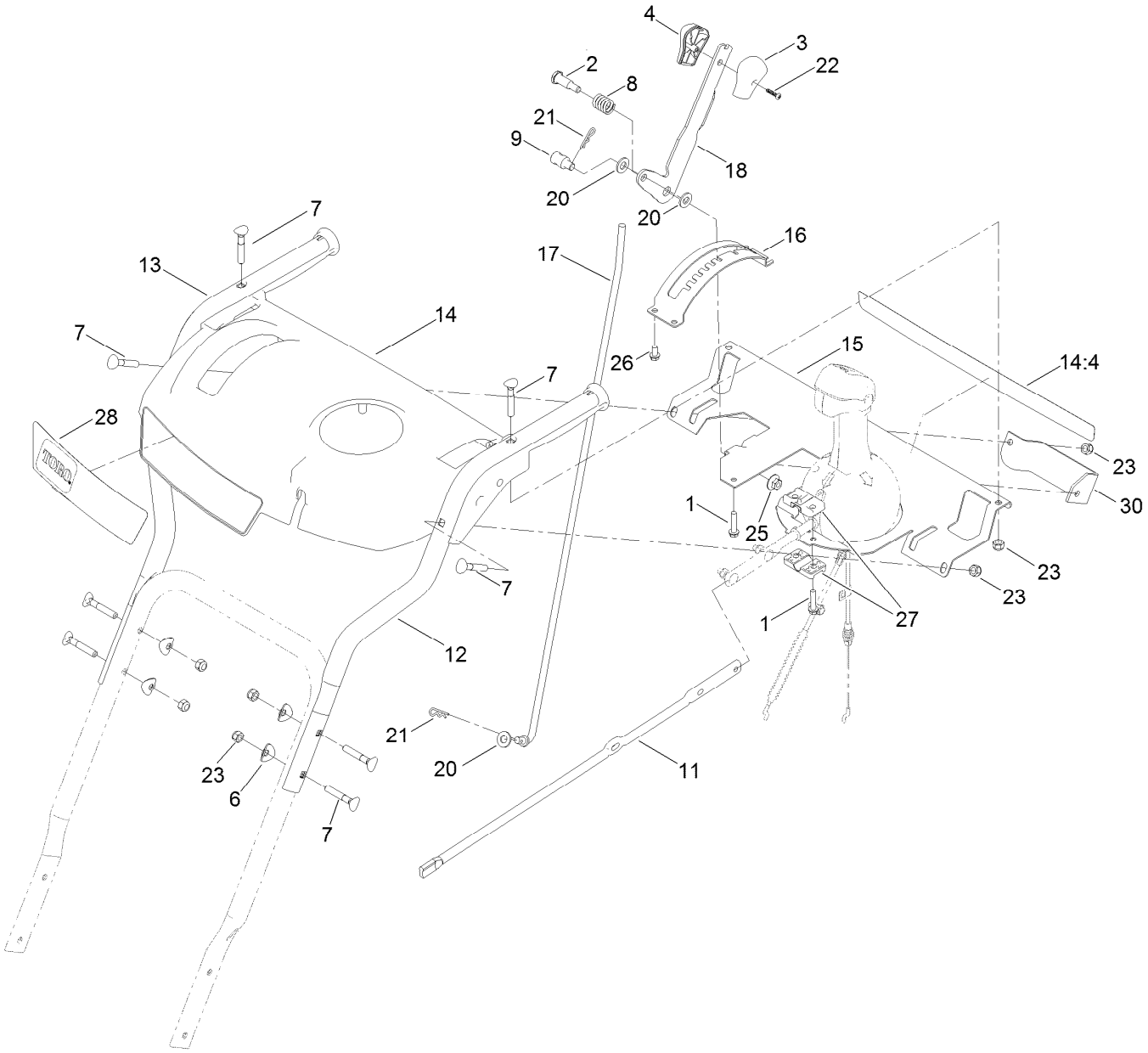

Handle Assembly (continued)

Ref.	Part Number	Qty.	Description
1	137-3100	3	Screw-Plastite, HWH
2	137-3103	1	Screw-Shoulder, HH
3	105-9999	1	Knob-Shift, LH
4	106-4423	1	Knob-Shift, RH
6	137-3009	4	Washer-Cup
7	137-3107	8	Screw-Handle
8	136-7121	1	Spring-Compression
9	136-7193	1	Trunnion-Rod
11	138-3635	1	Rod-Chute
12	120-7173-03	1	Handle-Upper, LH
13	120-7174-03	1	Handle-Upper, RH
14	138-8487	1	Control Panel ASM
14:4	121-1240	1	Decal-Safety
15	138-3676-03	1	Support-Panel, Control
16	120-9258-03	1	Mount-Selector, Speed
17	136-7163	1	Rod-Selector, Gear
18	121-1242-03	1	Selector-Speed
20	131-8667	3	Washer-Thrust
21	137-3083	2	Pin-Hair
22	94-4496	1	Screw-PPH
23	137-3093	8	Nut-Hex
25	137-3038	1	Nut-HF
26	46-8093	4	Screw-Plastite
27	105-9987	2	Support-Rod
28	121-1241	1	Decal-Model
30	120-2301-03	1	Plate-Support, Shift

Control Assembly

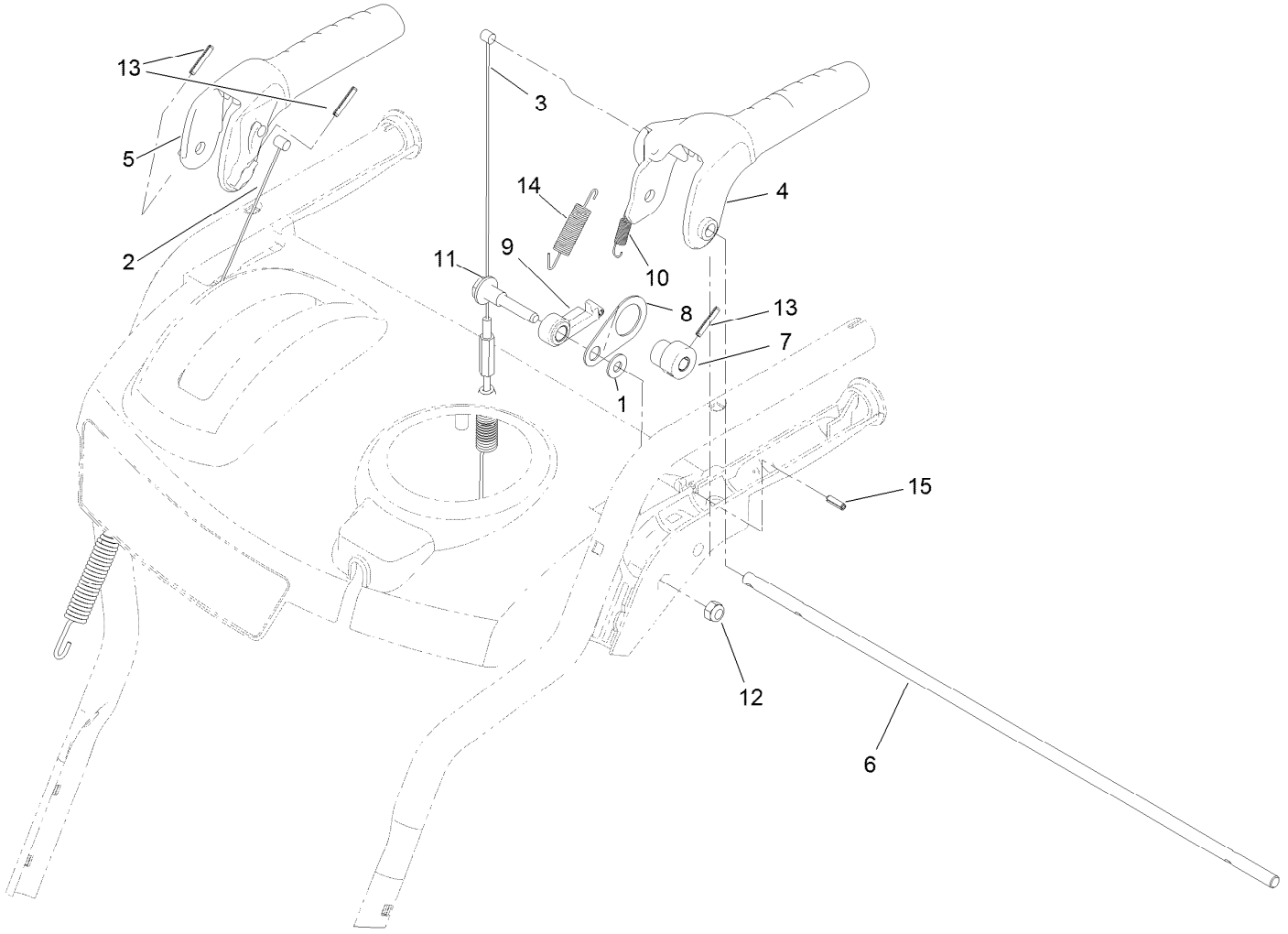

Control Assembly (continued)

Ref.	Part Number	Qty.	Description
1	98-3499	1	Washer-Flat
2	121-6812	1	Cable-Auger
3	121-6813	1	Cable-Traction
4	121-1200	1	Handle-Control, Traction
5	121-1201	1	Handle-Control, Auger
6	136-7125	1	Rod-Lockout
7	121-1203	1	Cam-Lockout
8	136-7160	1	Link-Lockout
9	121-1205	1	Latch-Lockout
10	136-7161	1	Spring-Lockout, Handle
11	136-7194	1	Screw-Shoulder
12	137-3093	1	Nut-Hex
13	137-3035	3	Pin-Spring
14	136-7162	1	Spring-Return, Lever
15	32121-2	1	Pin-Roll, Slotted

Attachments and Accessories

For 38814 Power Max 726 OE Snowthrower

Product Name	Model/Part
Weight Kit	107-3815
Snow Cab Kit	127-5960
Engine Maintenance Kit	138-0702
Non-Marking Skid Kit	38211
Heavy-Duty Skid Kit	38212
Drift Breaker Kit	38213
Toro Snow Oil 0W30 Synthetic 20-Ounce Bottle	38913
Toro 2-Stage Cover	490-7466
Plain 2-Stage Cover	490-7467

Notes:

Notes:

Notes:



Count on it.