Form No. 3429-224 Rev A

Front Light Replacement Kit

Workman® Utility Vehicle

Model No. 139-4500

Installation Instructions

Installation

Loose Parts

Use the chart below to verify that all parts have been shipped.

Description	Qty.	Use
No parts required	–	Prepare a machine.
Light Bracket	1 1	Replace a front light (for GTX and 2016 and after MDX models without a Brush Guard Kit installed).
Light Bracket	1 1	Replace a front light (for GTX and 2016 and after MDX models with a Brush Guard Kit installed).
Light Bracket	1 1	Replace a front light (for 2016 and before MDX models).
Light Left bracket Right bracket	1 1 1	Replace a front light (for HD, HDX, HDX-D, and HDX-Auto models).
No parts required	–	Connect the battery.
No parts required	–	Check the function of the signal lights.

Preparing a Machine

1. Park a machine on a level surface.
2. Engage the parking brake.
3. Shut off the engine and remove the key.
4. **For Electric GTX Models:** disconnect the main negative battery cable (black) that connects the bank of batteries to the ground point of the machine; refer to your *Operator's Manual*.
5. **For all other Workman Models:** disconnect the negative battery cable; refer to your *Operator's Manual*.

© 2018—The Toro® Company
8111 Lyndale Avenue South
Bloomington, MN 55420

Register at www.Toro.com.

CE

Original Instructions (EN)
Printed in the USA
All Rights Reserved

3429-224 A

Replacing a Front Light

For GTX and 2016 and After MDX Models Without a Brush Guard Kit Installed

1. Remove the 2 existing screws from the headlight bracket (Figure 1).

   Retain the fasteners.

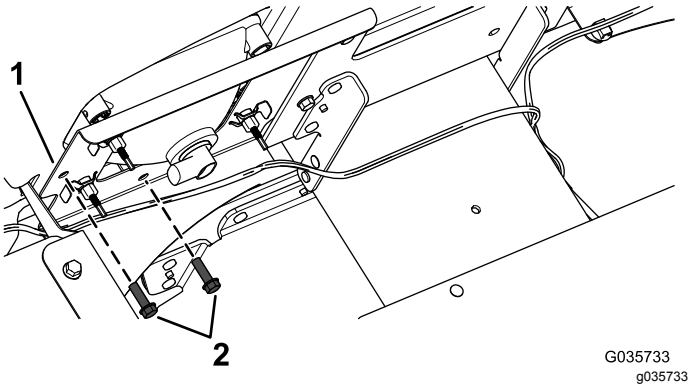

Figure 1

GTX model shown

1. Bracket
2. Screws

2. Remove the existing front position/signal light.
3. Install the new front position/signal light to the bracket using the previously removed 2 screws (Figure 2).

   Note: Ensure that the clear lens (position light) is positioned to the inside and the amber lens (signal light) is positioned to the outside (Figure 2).

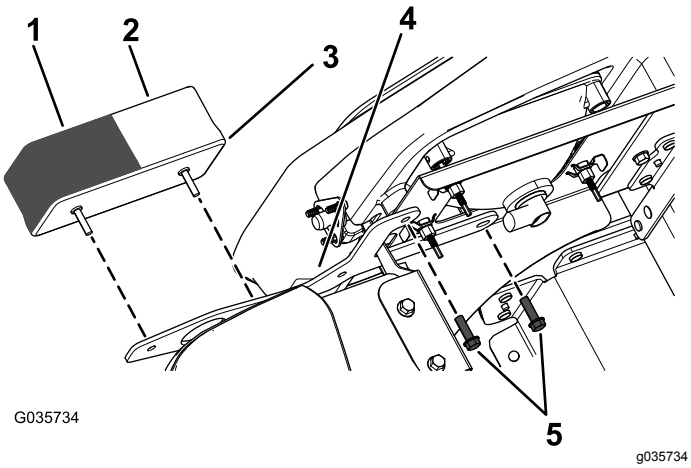

Figure 2

GTX model shown

1. Amber lens (signal light)
2. Clear lens (position light)
3. Front position/signal light
4. Front light bracket
5. Screws

4. Connect the wire harness lead to the front position/signal light.

Replacing a Front Light

For GTX and 2016 and After MDX Models With a Brush Guard Kit Installed

1. Remove the existing front position/signal light.

   Retain the fasteners.

2. Install the front position/signal light to the brush guard using the front bracket and the previously removed 2 self-tapping screws (1/4 x 1/2 inch) as shown in Figure 3.

   Important: **Torque the 4 self-tapping screws (1/4 x 1/2 inch) to 452 to 508 N·cm (40 to 45 in-lb).**

   Note: Ensure that the amber lens (signal light) is positioned on top of the clear lens (position light) as shown in Figure 3.

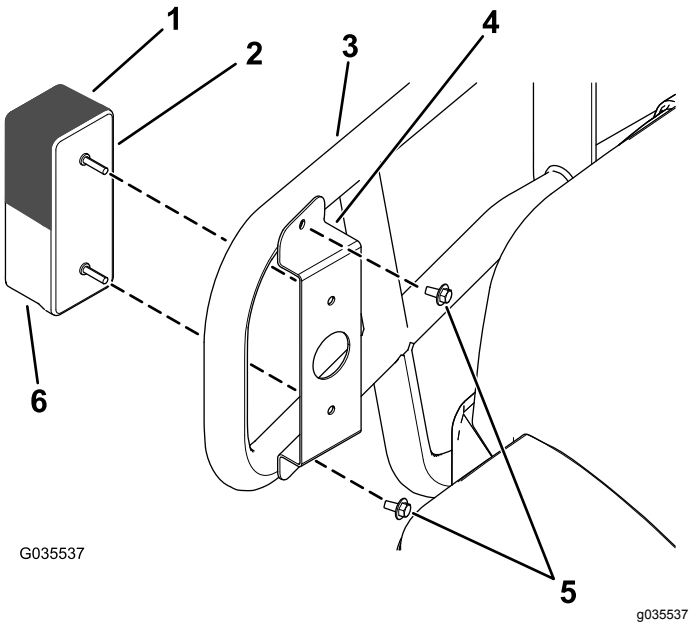

Figure 3

GTX model shown

1. Amber lens (signal light)
2. Front position/signal light
3. Brush guard
4. Front light bracket
5. Self-tapping screws (1/4 x 1/2 inch)
6. Clear lens (position light)

3. Connect the wire harness lead to the front position/signal light.

Replacing a Front Light

For 2016 and Before MDX Models

1. Remove the existing front position/signal light.

   Retain the fasteners.

2. Secure the light to the bracket using the previously removed fasteners (Figure 4).

   Note: Ensure that the clear lens (position light) is positioned to the inside and the amber lens (signal light) is positioned to the outside (Figure 4).

   Note: The brackets are distinguishable by the angle of the face plate and a longer standing leg that faces outboard (Figure 4).

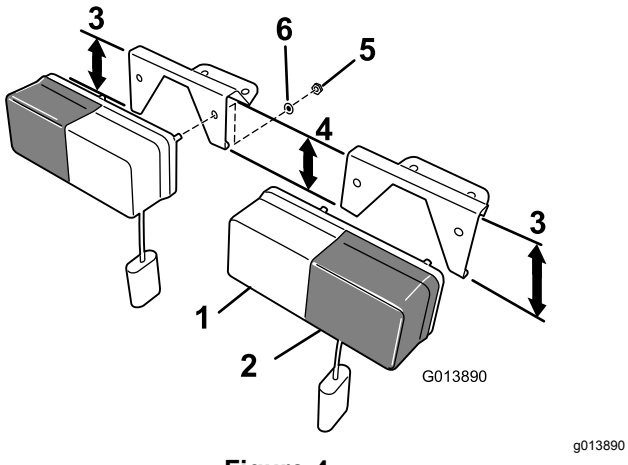

Figure 4

1. Clear lens (position light)
2. Amber lens (signal light)
3. Longer bracket leg
4. Shorter bracket leg
5. Hex nut (M5 X 0.88 mm)—assembled on the light assembly
6. Lock washer (M5)—assembled on the light assembly

3. Connect the wire harness lead to the front position/signal light.

Replacing a Front Light

For HD, HDX, HDX-D, and HDX-Auto Models

1. Remove the existing front position/signal light.

   Retain the fasteners.

2. Push the bracket on to the studs of the light (Figure 5).

   Important: **Ensure that you install the bracket to the light so that the angle on the bracket makes the light point straight forward after installation, with the amber lens of the light to the outside of the machine.**

   Note: Align the light with the amber lens to the outside.

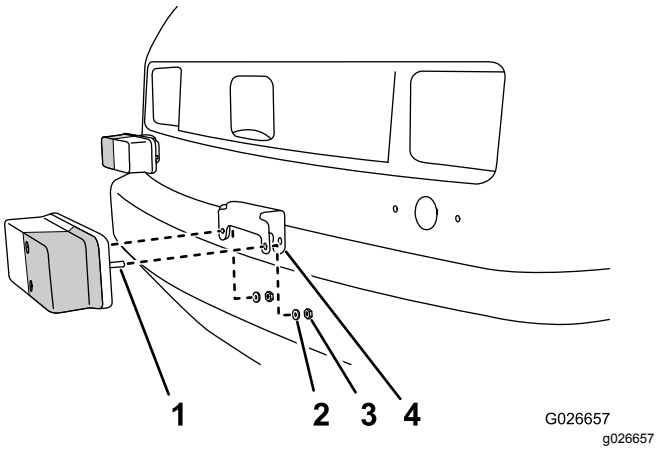

Figure 5

1. Studs (position light—amber lens outward)
2. Lock washer
3. Nut
4. Lamp bracket

3. Secure the light and bracket using the previously remove lock washer and nut.
4. Align the holes in the bracket and light with the hole in the hood (Figure 6).

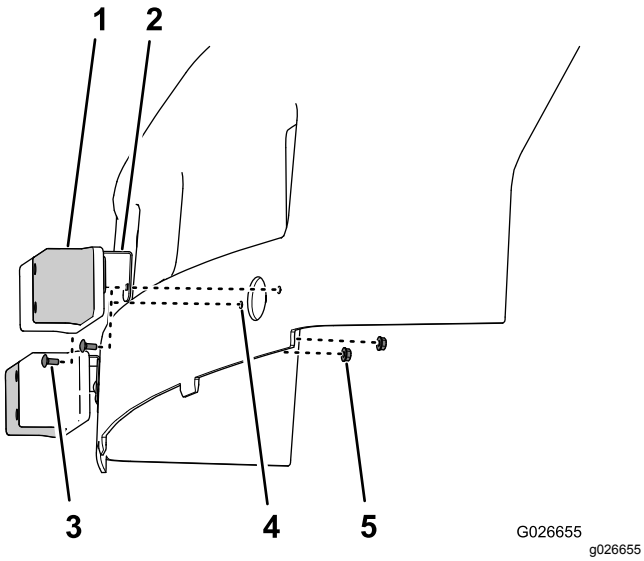

Figure 6

1. Position light (amber lens outward)
2. Lamp bracket
3. Carriage bolt (#10 x 1/2 inch)
4. Hole
5. Flanged locknuts (#10)

5. Secure the bracket and light to the hood using the carriage bolts (#10 x 1/2 inch) and flanged locknuts (#10) as shown in Figure 6.
6. Connect the wire harness lead to the front position/signal light.

Connecting the Battery

For Electric GTX Models: Connect the main negative battery cable (black) that connects the bank of batteries to the ground point of the machine; refer to your *Operator's Manual*.

For all other Workman Models: connect the negative battery cable; refer to your *Operator's Manual*.

Checking the Function of the Signal Lights

Push the signal-controller lever down to engage the left signal lights.

Push the signal-controller lever up to engage the right signal lights.