Form No. 3429-238 Rev A

Rear Lamp Replacement Kit

Workman® Utility Vehicle

Model No. 139-4501

Installation Instructions

Installation

Loose Parts

Use the chart below to verify that all parts have been shipped.

Description	Qty.	Use
No parts required	–	Prepare a machine.
Brake/signal light Bracket	1 1	Replace a brake/signal light.
No parts required	–	Connect the battery.
No parts required	–	Check the function of the brake and signal lights.

Preparing a Machine

1. Park a machine on a level surface.
2. Engage the parking brake.
3. Shut off the engine and remove the key.
4. **For Electric GTX Models:** disconnect the main negative battery cable (black) that connects the bank of batteries to the ground point of the machine; refer to your *Operator's Manual*.
5. **For all other Workman Models:** disconnect the negative battery cable; refer to your *Operator's Manual*.

© 2018—The Toro® Company
8111 Lyndale Avenue South
Bloomington, MN 55420

Register at www.Toro.com.

CE

Original Instructions (EN)
Printed in the USA
All Rights Reserved

3429-238 A

Replacing a Brake/Signal Light

For GTX and MDX Models

1. Remove the existing rear brake/signal light.

   Retain the fasteners.

2. Install the rear brake/signal light to the bottom of the cargo bed and cargo bed support using the bracket, 2 hex-head screws (5/16 x 3/4 inch), and 2 spacers (5/16 inch) as shown in Figure 1.

   Note: Ensure that the red lens (brake light) is positioned to the inside and the amber lens (signal light) is positioned to the outside (Figure 1).

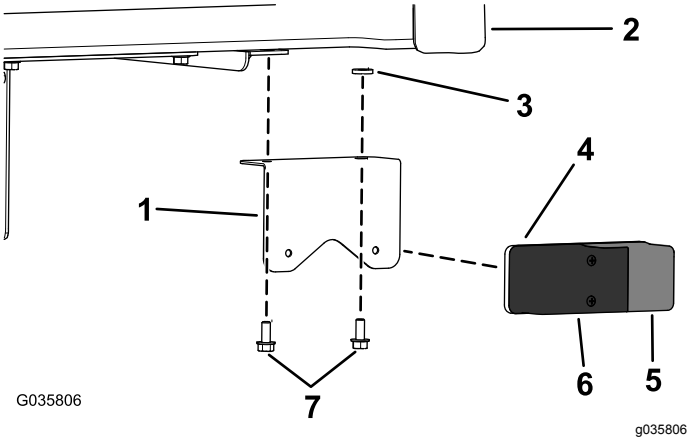

Figure 1

GTX model shown

1. Bracket
2. Cargo bed
3. Spacer (5/16 inch)
4. Rear brake/signal light
5. Amber lens (signal light)
6. Red lens (brake light)
7. Hex-head screws (5/16 x 3/4 inch)

3. Connect the wire harness lead to the rear brake/signal light.

For HD, HDX, HDX-D, and HDX-Auto Models

1. Remove the existing rear brake/signal light.

   Retain the fasteners.

2. Install the rear brake/signal light to the fender using the bracket and 2 screws (Figure 2).

   Note: Ensure that the red lens (brake light) is positioned to the inside and the amber lens (signal light) is positioned to the outside (Figure 2).

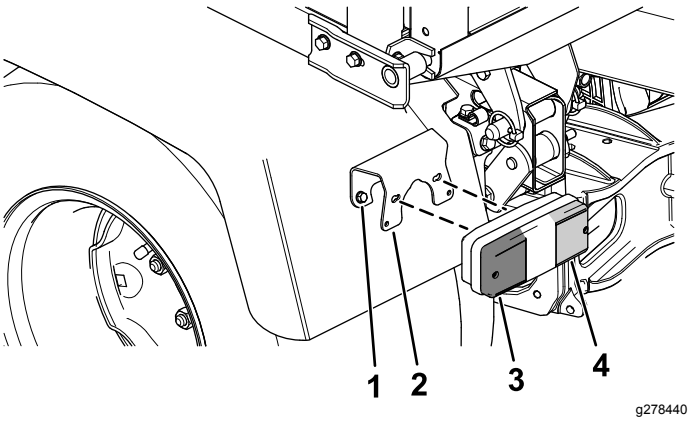

Figure 2

1. Screw
2. Bracket
3. Amber lens (signal light)
4. Red lens (brake light)

3. Connect the wire harness lead to the rear brake/signal light.

Connecting the Battery

For Electric GTX Models: Connect the main negative battery cable (black) that connects the bank of batteries to the ground point of the machine; refer to your *Operator's Manual*.

For all other Workman Models: connect the negative battery cable; refer to your *Operator's Manual*.

Checking the Function of the Brake and Signal Lights

Checking the Function of the Brake Lights

Press your foot on the brake pedal and the brake lights should illuminate.

Checking the Function of the Signal Lights

Push the signal-controller lever down to engage the left signal lights.

Push the signal-controller lever up to engage the right signal lights.



Count on it.