Form No. 3429-251 Rev A

TORO®

Count on it.

Parts Catalog

Rear Lamp Replacement Kit

Workman® Utility Vehicle

Model No. 139-4501

Register at www.Toro.com.
Original Instructions (EN)

CE

3429-251 A

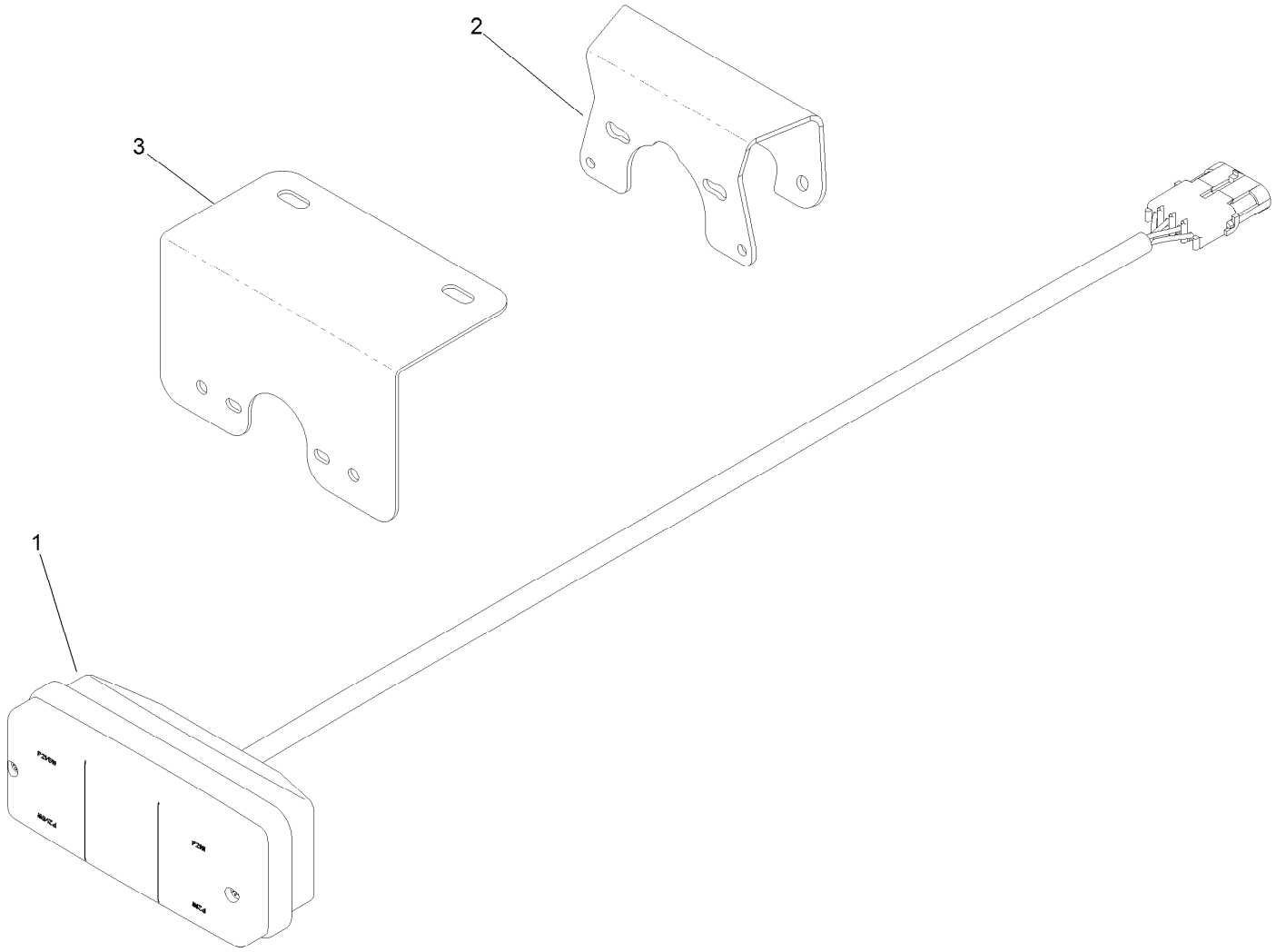

Rear Lamp Replacement Assembly No. 139-4501

Ref.	*Part Number*	*Qty.*	*Description*
1	138-9265	1	Lamp-Tail, Rear
2	121-6269-03	1	Bracket-Light, Tail
3	138-9298-03	1	Bracket-Light, Tail

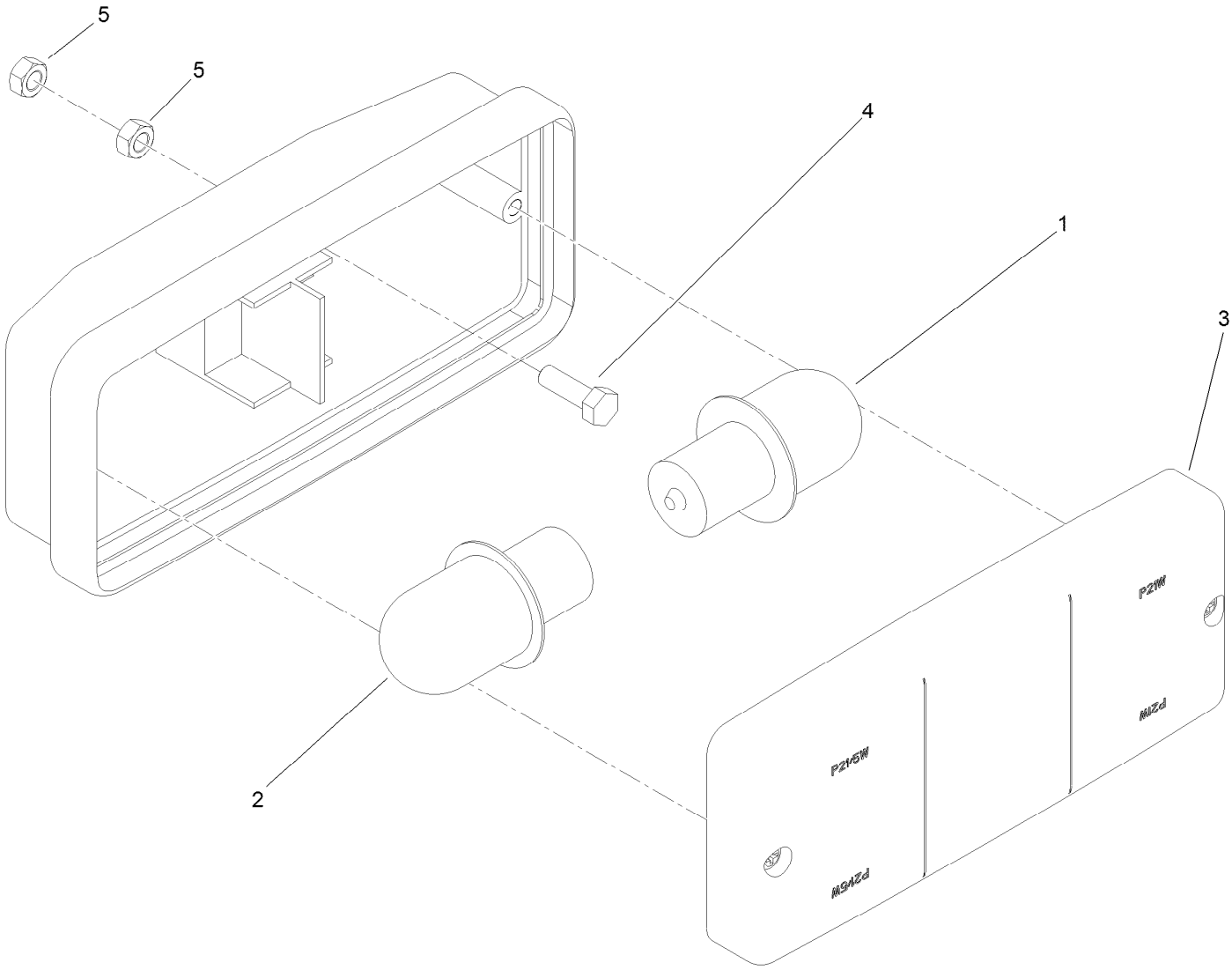

Rear Tail Lamp Assembly No. 138-9265

Ref.	*Part Number*	*Qty.*	*Description*
1	7228	1	Bulb-1156
2	108-8054	1	Bulb-1157
3	120-6656	1	Lens-Red/Amber
4	60-6910	2	Screw-HH
5	48-7880	4	Nut-Hex



Count on it.