Form No. 3429-269 Rev A

Power Clear® 721 Snowthrower

Model No. 38752—Serial No. 400000000 and Up

Model No. 38753—Serial No. 400000000 and Up

Model No. 38756—Serial No. 400000000 and Up

Operator's Manual

Introduction

This machine is intended to be used by residential homeowners. It is designed primarily for removing snow from paved surfaces, such as driveways and sidewalks, and other surfaces for traffic on residential or commercial properties. It is not designed for removing materials other than snow, nor is it designed for clearing gravel surfaces.

Read this information carefully to learn how to operate and maintain your product properly and to avoid injury and product damage. You are responsible for operating the product properly and safely.

Visit www.Toro.com for product safety and operation training materials, accessory information, help finding a dealer, or to register your product.

Whenever you need service, genuine Toro parts, or additional information, contact an Authorized Service Dealer or Toro Customer Service and have the model and serial numbers of your product ready. Figure 1 identifies the location of the model and serial numbers on the product. Write the numbers in the space provided.

Important: **With your mobile device, you can scan the QR code on the serial number decal (if equipped) to access warranty, parts, and other product information.**

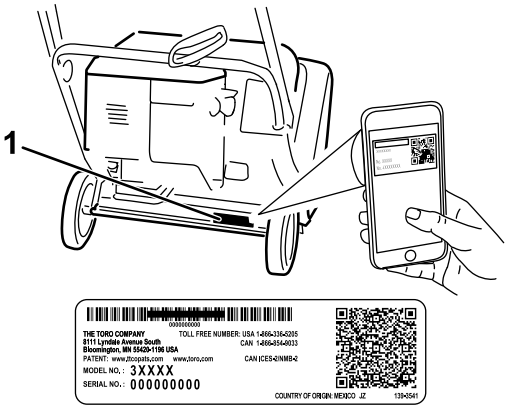

g291503

Figure 1

1. Model and serial number location

Model No. _____

Serial No. _____

This manual identifies potential hazards and has safety messages identified by the safety-alert symbol (Figure 2), which signals a hazard that may cause serious injury or death if you do not follow the recommended precautions.

g000502

Figure 2

Safety-alert symbol

This manual uses 2 words to highlight information. **Important** calls attention to special mechanical information and **Note** emphasizes general information worthy of special attention.

Important: **If you are using this machine above 1500 m (5,000 ft) for a continuous period, ensure that the High Altitude Kit has been installed so that the engine meets CARB/EPA emission regulations. The High Altitude Kit increases engine performance while preventing spark-plug fouling, hard starting, and increased emissions. Once you have installed the kit, attach the high-altitude label next to the serial decal on the machine. Contact any Authorized Toro Service Dealer to obtain the proper High Altitude Kit and high-altitude label for your machine. To locate a dealer convenient to you, access our website at www.Toro.com or contact our Toro Customer Care Department at the number(s) listed in your Emission Control Warranty Statement. Remove the kit from the engine and restore the engine to its original factory configuration when running the engine under 1500 m (5,000 ft). Do not operate an engine that has been converted for high-altitude use at lower altitudes; otherwise, you could overheat and damage the engine.**

If you are unsure whether or not your machine has been converted for high-altitude use, look for the following label (Figure 3).

© 2019—The Toro® Company
8111 Lyndale Avenue South
Bloomington, MN 55420

Register at www.Toro.com.

Original Instructions (EN)
Printed in Mexico
All Rights Reserved

3429-269 A

NOTE: THE ENGINE ON THIS PRODUCT HAS BEEN MODIFIED FOR USE AT ABOVE 5,000 FEET ELEVATION. IF USING BELOW 5,000 FEET, IT MUST BE REVISED BACK TO ORIGINAL SPECIFICATIONS.

127-9363

decal127-9363

Figure 3

⚠ WARNING

CALIFORNIA
Proposition 65 Warning

The engine exhaust from this product contains chemicals known to the State of California to cause cancer, birth defects, or other reproductive harm.

Use of this product may cause exposure to chemicals known to the State of California to cause cancer, birth defects, or other reproductive harm.

Contents

Introduction 1
Safety 3
General Safety 3
Safety and Instructional Decals 4
Setup 5
1 Unfolding the Handle 5
2 Installing the Recoil-Start Guide and Rope 5
3 Installing the Discharge Chute 5
4 Filling the Engine with Oil 6
5 Adjusting the Control Cable 7
Product Overview 8
Specifications 8
Attachments/Accessories 8
Operation 9
Before Operation 9
Before Operation Safety 9
Filling the Fuel Tank 9
Checking the Engine-Oil Level 10
During Operation 11
During Operation Safety 11
Starting the Engine 11
Engaging the Rotor Blades 13
Disengaging the Rotor Blades 13
Shutting Off the Engine 13
Adjusting the Discharge Chute and Chute Deflector 13
Adjusting the Discharge Chute and Chute Deflector 13
Clearing a Clogged Discharge Chute 14
Operating Tips 14
After Operation 14
After Operation Safety 14
Preventing Freeze-up after Use 14
Maintenance 16
Recommended Maintenance Schedule(s) 16
Maintenance Safety 16
Checking and Adjusting the Control Cable 16
Inspecting the Rotor Blades 17
Changing the Engine Oil 18
Replacing the Spark Plug 19
Replacing the Drive Belt 19
Adjusting the Quick Shoot Control 20
Storage 22
Storage Safety 22
Storing the Machine 22

Safety

This machine has been designed in accordance with ANSI/OPEI B71.3 specifications.

General Safety

This product is capable of amputating hands and feet and of throwing objects. Always follow all safety instructions to avoid serious personal injury.

- Read and understand the contents of this *Operator's Manual* before you start the engine. Ensure that everyone using this product knows how to use it, knows how to shut off the engine quickly, and understands the warnings.
- Shut off the engine whenever you leave the operating position for any reason.
- Do not put your hands or feet near moving parts on the machine.
- Do not operate the machine without all guards and other safety protective devices in place and working.
- Keep clear of any discharge opening. Keep bystanders, especially small children, out of the operating area.
- Never allow children to operate the machine.

Safety and Instructional Decals

Safety decals and instructions are easily visible to the operator and are located near any area of potential danger. Replace any decal that is damaged or missing.

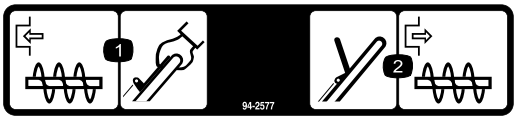

decal94-2577

94-2577

1. To engage the rotor blades, hold the control bar against the handle.
2. To disengage the rotor blades, release the control bar.

Order Part No. 117-9121

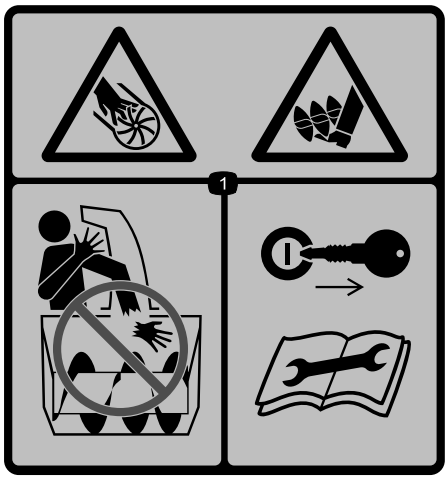

decal115-5698

115-5698

1. Cutting/dismemberment hazard, impeller and auger—do not place your hand in the chute; remove the key and read the *Operator's Manual* before performing maintenance.

---

decal133-8061

133-8061

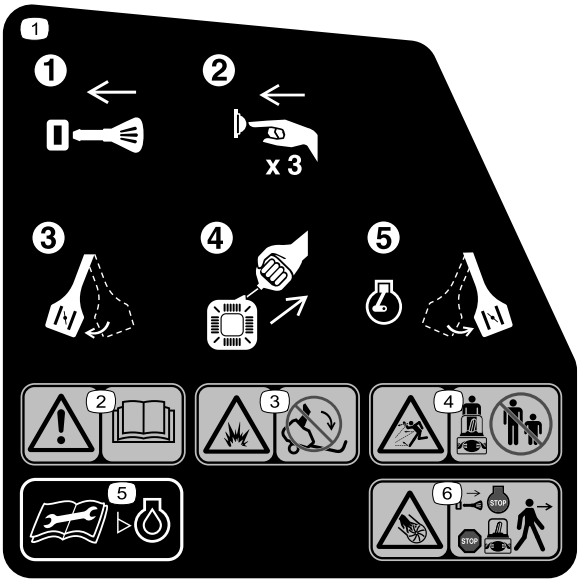

decal139-3505

139-3505

1. Insert the key, press the primer 3 times, move the choke lever to the left, pull the recoil-start handle, and once the engine is running move the choke lever to the right.
2. Warning—read the *Operator's Manual*.
3. Explosion hazard—do not tip the machine.
4. Thrown object hazard—keep bystanders away.
5. Read the *Operator's Manual* before servicing the engine oil level.
6. Cutting/dismemberment hazard of the hand, rotor—shut off the engine, remove the key, and wait for all moving parts to stop before leaving the machine.

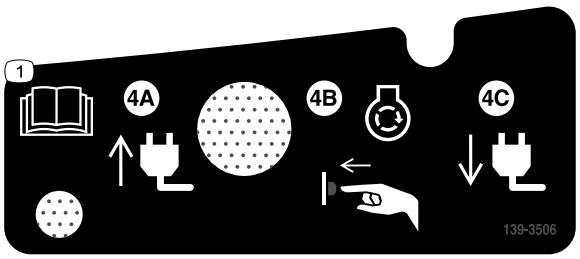

decal139-3506

139-3506

1. Read the *Operator's Manual*—plug the machine in to power the electric starter, press the electric-start button to start the engine, and then remove the plug from the machine.

Setup

1

Unfolding the Handle

No Parts Required

Procedure

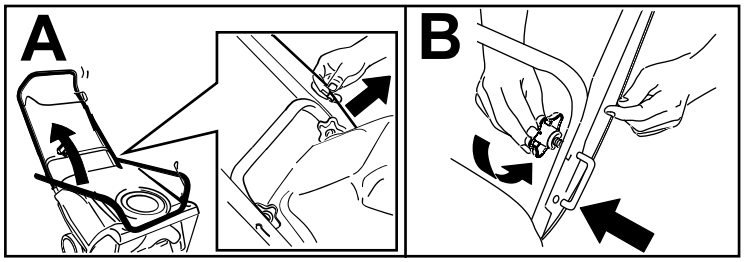

g287663

2

Installing the Recoil-Start Guide and Rope

No Parts Required

Procedure

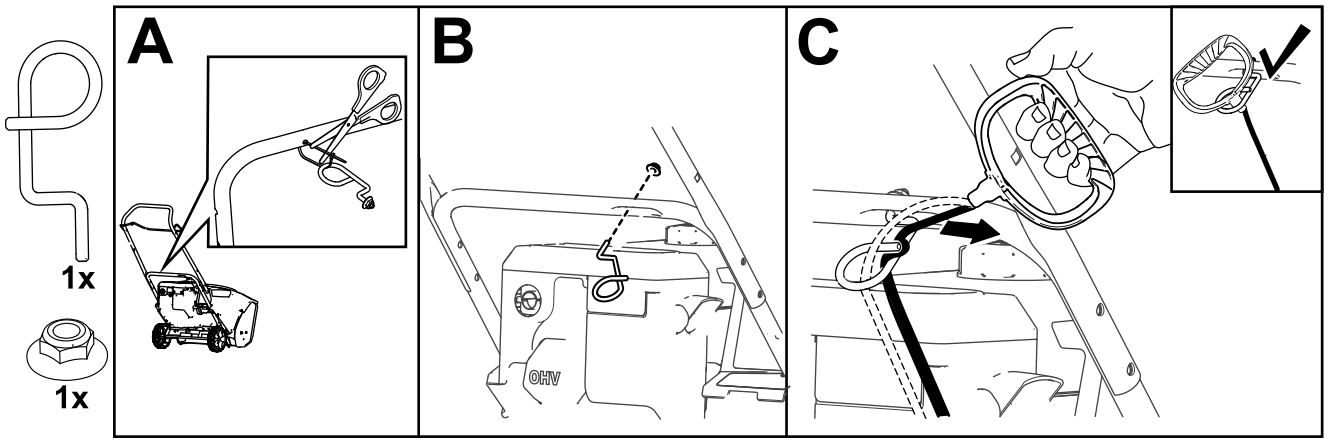

g286483

3

Installing the Discharge Chute

No Parts Required

Procedure

Models 38752 and 38753

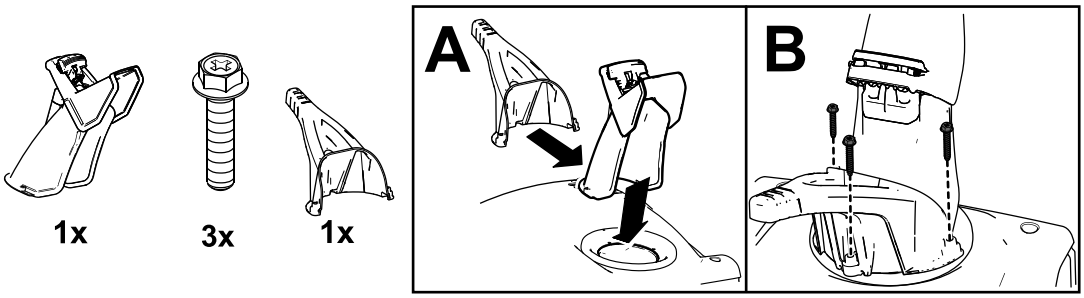

g291515

Model 38756

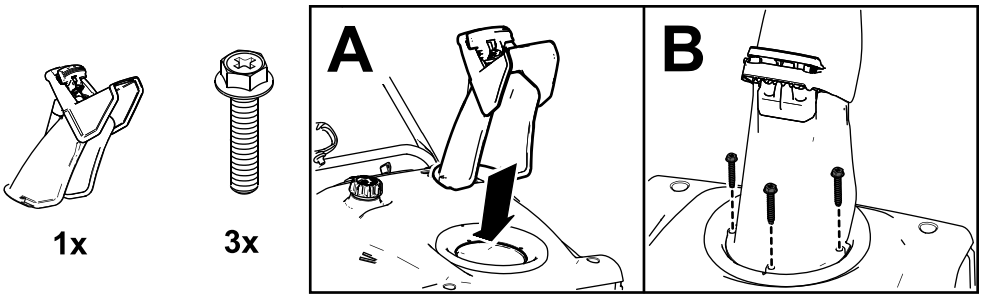

g262492

4

Filling the Engine with Oil

No Parts Required

Procedure

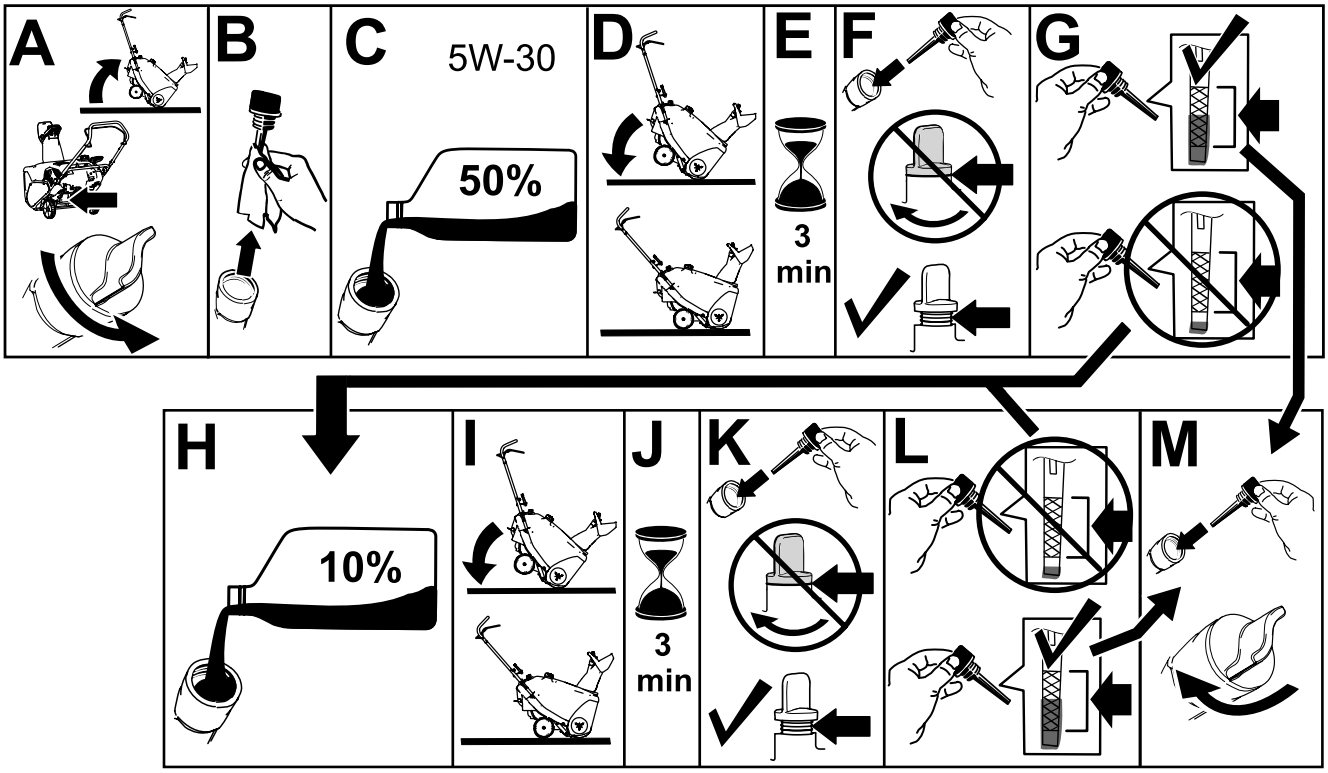

g286445

5

Adjusting the Control Cable

No Parts Required

Procedure

Refer to Adjusting the Control Cable (page 17).

Product Overview

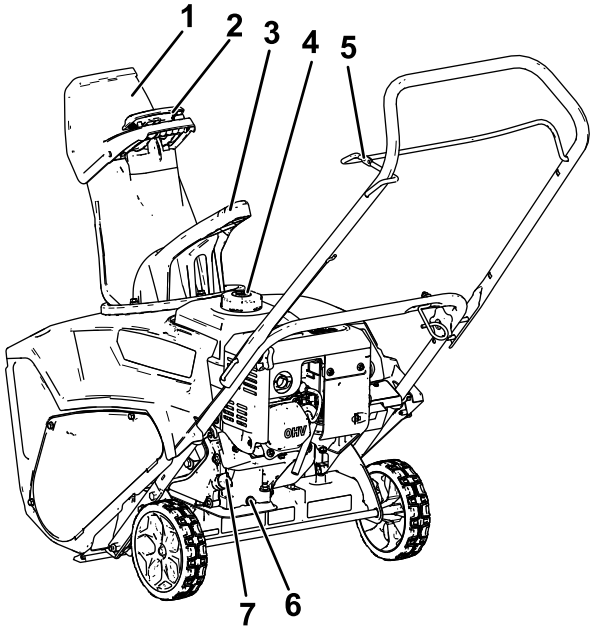

g291536

Figure 9

Models 38752 and 38753

1. Chute deflector
2. Chute-deflector trigger
3. Chute handle
4. Fuel-tank cap
5. Control bar
6. Oil-drain plug
7. Oil fill/dipstick

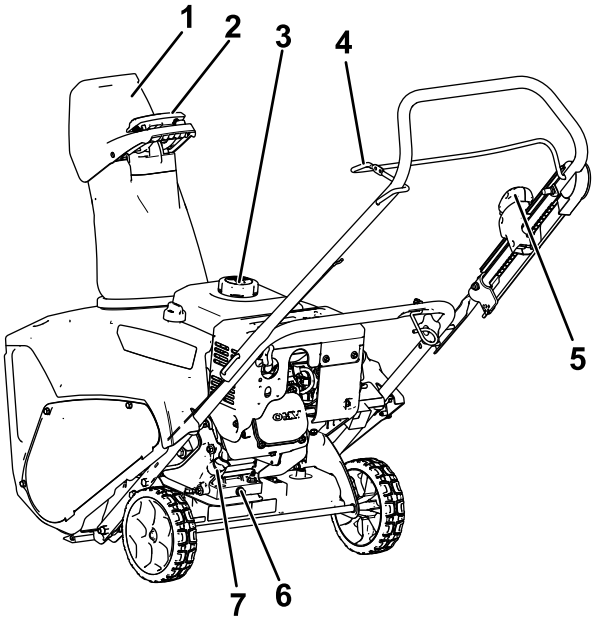

g280271

Figure 10

Model 38756

1. Chute deflector
2. Chute-deflector trigger
3. Fuel-tank cap
4. Control bar
5. Quick Shoot™ control
6. Oil-drain plug
7. Oil fill/dipstick

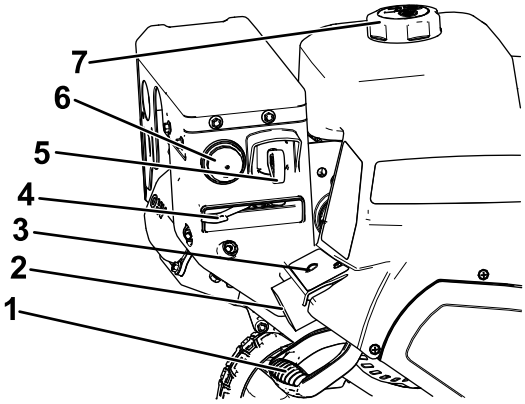

g280282

Figure 11

1. Recoil-start handle
2. Electric-start plug-in (electric-start models only)
3. Electric-start button (electric-start models only)
4. Choke
5. Key
6. Primer
7. Fuel-tank cap

Specifications

Model	Weight	Length	Width	Height
38752	38 kg (84 lb)	122 cm (48 inches)	54 cm (21 inches)	107 cm (42 inches)
38753	38 kg (84 lb)			
38756	39 kg (86 lb)			

Attachments/Accessories

A selection of Toro approved attachments and accessories is available for use with the machine to enhance and expand its capabilities. Contact your Authorized Service Dealer or authorized Toro distributor or go to www.Toro.com for a list of all approved attachments and accessories.

To ensure optimum performance and continued safety certification of the machine, use only genuine Toro replacement parts and accessories. Replacement parts and accessories made by other manufacturers could be dangerous, and such use could void the product warranty.

Operation

Note: Determine the left and right sides of the machine from the normal operating position.

Before Operation

Before Operation Safety

General Safety

- **For electric-start models only:** Use extension cords and receptacles as specified in the manual. Inspect the electrical cord before plugging it into a power source. If the cord is damaged, replace it. Unplug the power cord whenever you are not starting the machine.
- Wear appropriate clothing, including eye protection; long pants; substantial, slip-resistant footwear; and hearing protection. Tie back long hair, secure loose clothing, and do not wear loose jewelry.
- Thoroughly inspect the area where you will use the machine, and remove all doormats, sleds, boards, wires, and other foreign objects.
- If a shield, safety device, or decal is damaged, illegible, or missing, repair or replace it before beginning operation. Also, tighten any loose fasteners.

Fuel Safety

Fuel is extremely flammable and explosive. A fire or explosion from fuel can burn you and others.

- To prevent a static charge from igniting the fuel, place the container and/or machine on the ground before filling, not in a vehicle or on an object.
- Fill the fuel tank outdoors when the engine is cold. Replace the fuel cap securely and wipe up spills.
- Do not handle fuel when smoking or around an open flame or sparks.
- Store fuel in an approved fuel container, out of the reach of children.
- When fuel is in the tank, tip the machine only as directed in the instructions.
- If you spill fuel on your clothing, change your clothing immediately.

Filling the Fuel Tank

- For best results, use only clean, fresh (less than 30 days old), unleaded gasoline with an octane rating of 87 or higher ((R+M)/2 rating method).
- Oxygenated fuel with up to 10% ethanol or 15% MTBE by volume is acceptable.
- **Do not** use ethanol blends of gasoline (such as E15 or E85) with more than 10% ethanol by volume. Performance problems and/or engine damage may result which may not be covered under warranty.
- **Do not** use gasoline containing methanol.
- **Do not** store fuel either in the fuel tank or fuel containers over the winter unless you use a fuel stabilizer.
- **Do not** add oil to gasoline.

Do not fill above the bottom of the fuel tank neck (Figure 12).

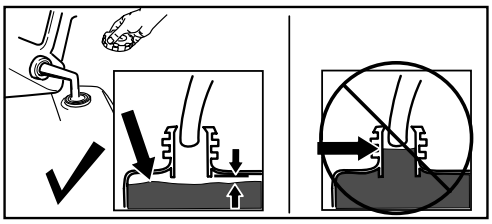

g216203

Figure 12

Important: **For best results, purchase only the quantity of fuel that you expect to use in 30 days. Otherwise, you may use fuel stabilizer/conditioner in the machine at all times to keep the fuel fresh longer when used as directed by the fuel-stabilizer manufacturer.**

Checking the Engine-Oil Level

Service Interval: Before each use or daily—Check the engine-oil level and add oil if necessary.

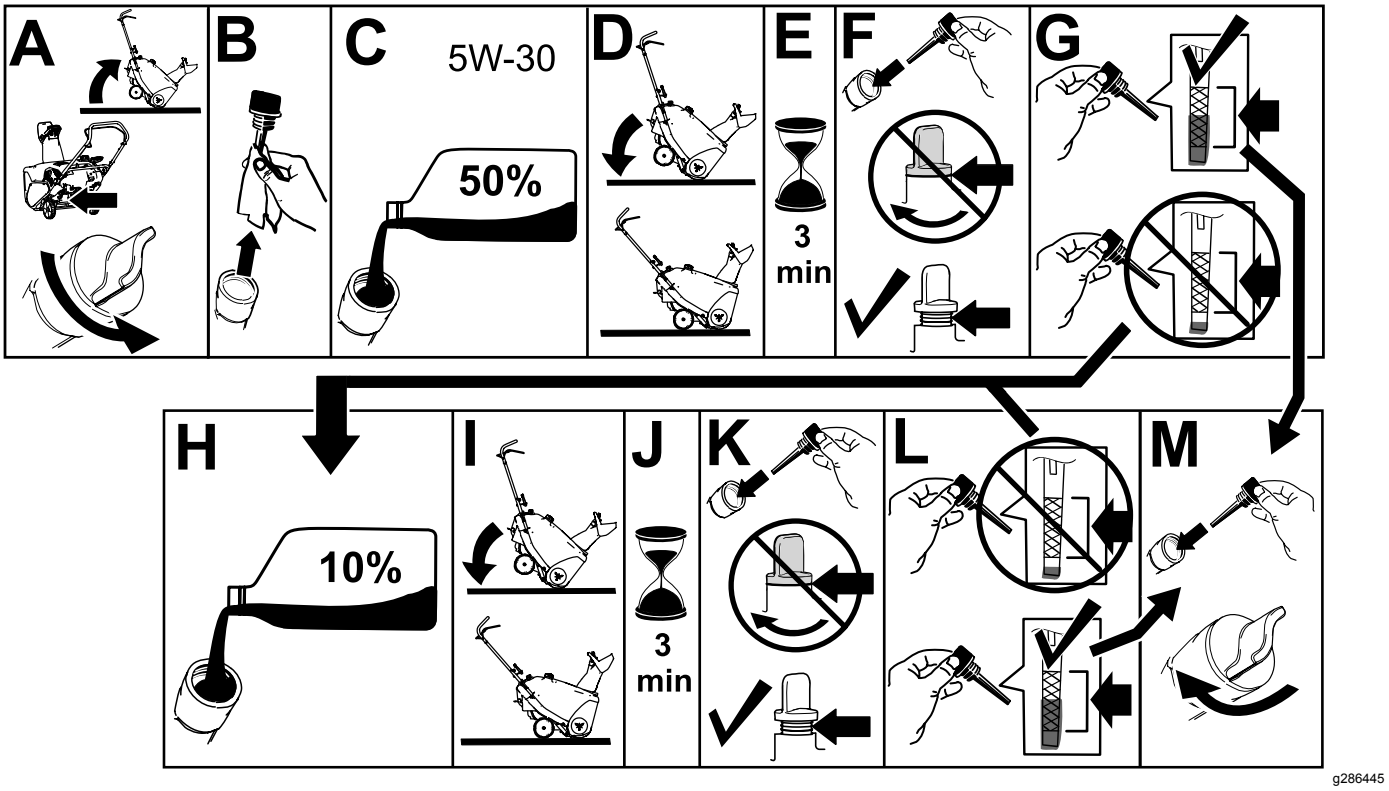

Figure 13

During Operation

During Operation Safety

General Safety

- **Shut off the engine before unclogging the machine and always use a stick.**
- Stay behind the handles and away from the discharge opening while operating the machine. **Keep your face, hands, feet, and any other part of your body or clothing away from moving or rotating parts.**
- Never direct the discharge toward people or areas where property damage can occur.
- Use your full attention while operating the machine. Do not engage in any activity that causes distractions; otherwise, injury or property damage may occur.
- Exercise caution to avoid slipping or falling, especially when operating the machine in reverse.
- Always be sure of your footing, and keep a firm hold on the handles. Walk; never run.
- Exercise extreme caution when operating the machine on a slope.
- Do not operate the machine without good visibility or light.
- Look behind and use care when backing up the machine.
- When not actively clearing snow, disengage power to the auger.
- Exercise extreme caution when operating the machine on walks or roads. Stay alert for hidden hazards or traffic.
- Never attempt to make any adjustments while the engine is running, except as directed in the instructions.
- After striking a foreign object, shut off the engine, remove the key, and inspect the machine for damage. Repair any damage before starting the machine.
- If the machine starts to vibrate abnormally, shut off the engine and check immediately for the cause.
- Do not run the engine indoors; exhaust fumes are dangerous.
- Do not overload the machine capacity by attempting to clear snow at too fast a rate.
- Shut off the engine whenever you leave the operating position, before clearing or unclogging the collector, rotor, or discharge chute, and when making any repairs, adjustments, or inspections.

Starting the Engine

Using Electric Start

Electric-start models only

Note: Remove your glove when you push in the primer so that air cannot escape from the primer hole.

Important: **Do not use the primer or the choke if the engine has been running and is hot. Excessive priming may flood the engine and prevent it from starting.**

To use the electric starter (electric-start models only), connect a power cord to the electric-start plug-in first and then to a ground fault circuit interrupter (GFCI) power outlet. Use only a UL-listed, 16-gauge power cord recommended for outdoor use that is not longer than 15 m (50 ft).

⚠ WARNING

The electrical cord can become damaged, causing a shock or fire.

Thoroughly inspect the electrical cord before plugging it into a power source. If the cord is damaged, do not use it. Replace or repair the damaged cord immediately. Contact an Authorized Service Dealer for assistance.

Important: **Run the electric starter no more than 10 times at intervals of 5 seconds on, then 5 seconds off. Running the electric starter extensively can overheat and damage it. If the engine does not start after this series of attempts, wait at least 40 minutes to allow the starter to cool before attempting to start it again. If the engine does not start after the second series of attempts, take the machine to an Authorized Service Dealer for service.**

⚠ CAUTION

If you leave the machine plugged into a power source, someone can inadvertently start the machine and injure people or damage property (electric-start models only).

Unplug the power cord whenever you are not starting the machine.

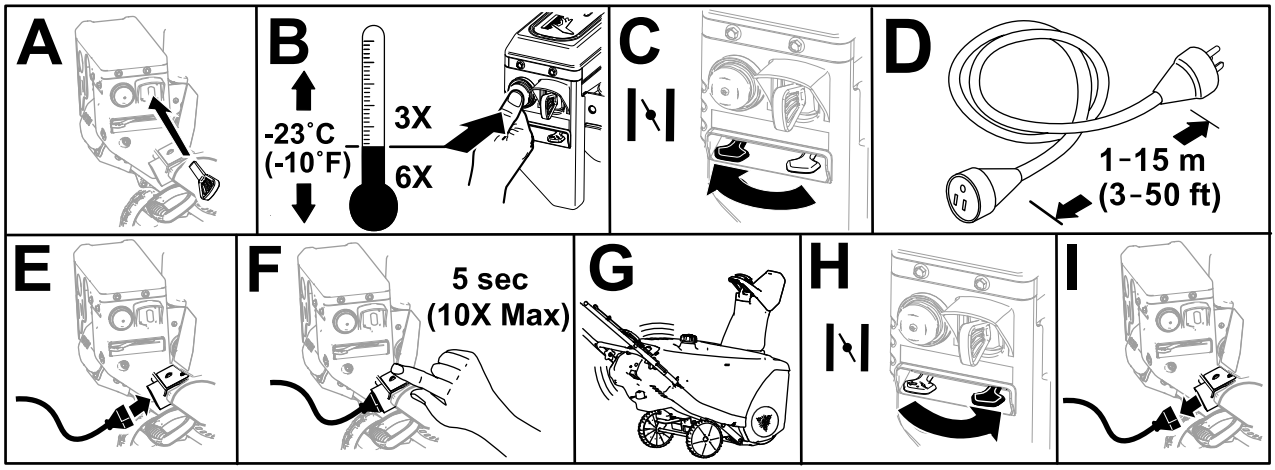

g280288

Figure 14

Using Recoil Start

Note: Remove your glove when you push in the primer so that air cannot escape from the primer hole.

Important: **Do not use the primer or the choke if the engine has been running and is hot. Excessive priming may flood the engine and prevent it from starting.**

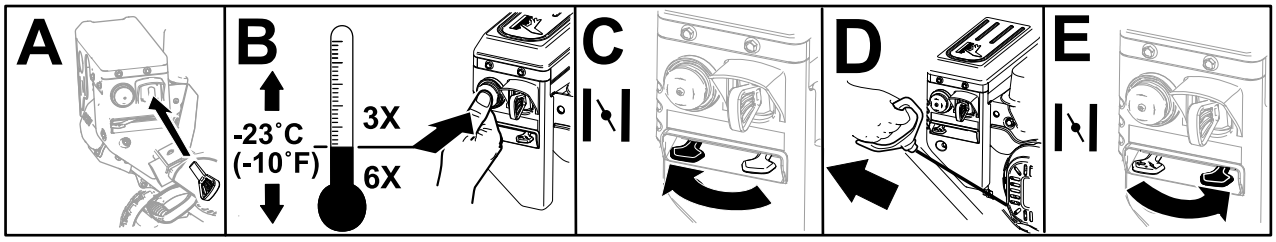

g280295

Figure 15

Engaging the Rotor Blades

To engage the rotor blades, hold the control bar against the handle (Figure 16).

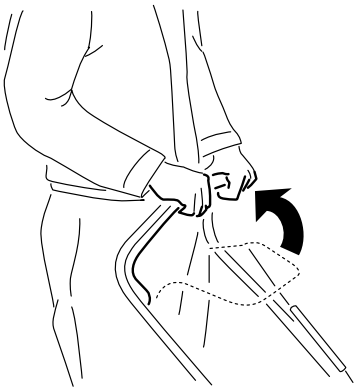

g216251

Figure 16

Disengaging the Rotor Blades

To disengage the rotor blades, release the control bar (Figure 17).

g006457

Figure 17

Shutting Off the Engine

To shut off the engine, remove the key from the ignition.

Adjusting the Discharge Chute and Chute Deflector

Models 38752 and 38753

To raise or lower the angle of the chute deflector, press the trigger on the chute deflector and move the chute deflector up or down.

To adjust the discharge chute, move the chute handle.

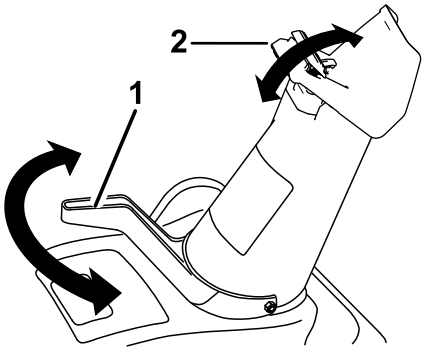

g278630

Figure 18

1. Chute handle
2. Trigger

Adjusting the Discharge Chute and Chute Deflector

Model 38756

To adjust the discharge chute, press the trigger of the Quick Shoot™ control on the right side of the handle and move it up or down along the handle. Moving the control down the handle rotates the discharge chute to the left; moving the control up the handle rotates the discharge chute to the right (Figure 19).

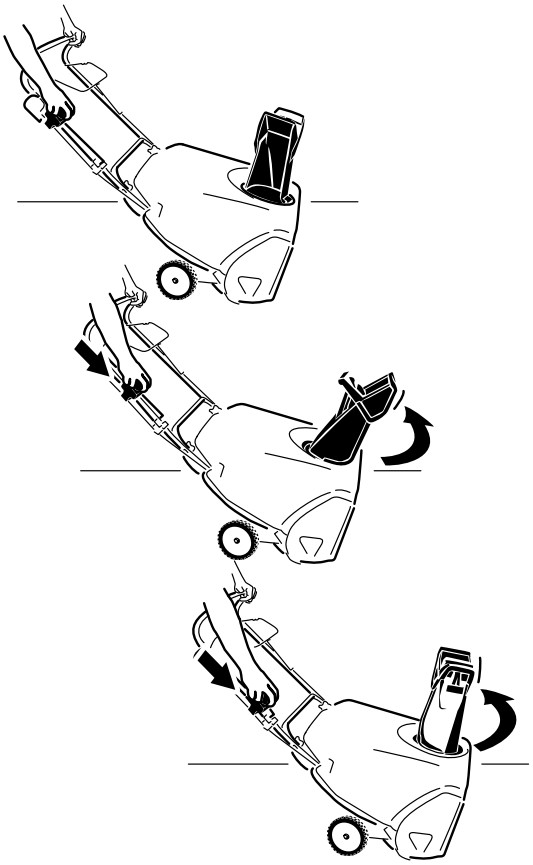

g280416

Figure 19

To raise or lower the angle of the chute deflector, press the trigger on the chute deflector and move the chute deflector up or down (Figure 20).

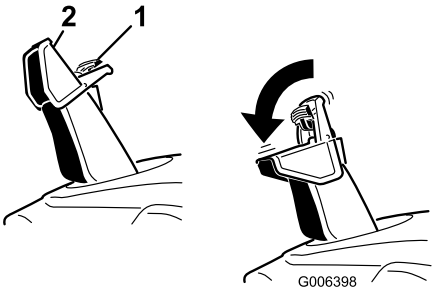

g006398

Figure 20

1. Chute-deflector trigger
2. Chute deflector

Clearing a Clogged Discharge Chute

To clear the chute:

- **Shut the engine off!**
- Wait 10 seconds to ensure that the rotor blades have stopped rotating.
- Always use a clean-out tool; never use your hands.

Operating Tips

⚠ WARNING

The rotor blades can throw stones, toys, and other foreign objects and cause serious personal injury to you or bystanders.

- **Keep the area to be cleared free of all objects that the rotor blades could pick up and throw.**
- **Keep all children and pets away from the area of operation.**

- Remove the snow as soon as possible after it falls.
- Overlap each swath to ensure complete snow removal.
- Discharge the snow downwind whenever possible.
- If the machine does not propel itself forward on slippery surfaces or in heavy snow, push forward on the handle, but allow the machine to work at its own pace.
- The machine may leave rubber marks on new brushed or light-colored concrete. Test on an inconspicuous location before use. These marks are not permanent.

After Operation

After Operation Safety

General Safety

- Never store the machine with fuel in the fuel tank inside a building where ignition sources are present, such as hot water heaters, space heaters, or clothes dryers. Allow the engine to cool before storing the machine in any enclosure.
- When storing the machine for more than 30 days, refer to Storage (page 22) for important information.
- Run the machine a few minutes after throwing snow to prevent freeze-up of the collector and rotor.

Preventing Freeze-up after Use

- Let the engine run for a few minutes to prevent moving parts from freezing. Shut off the engine, wait for all moving parts to stop, and remove ice and snow from the machine.
- Clean off any snow and ice from the base of the chute.

- Rotate the discharge chute left and right to free it from any ice buildup.
- With the key removed, pull the recoil-start handle several times or connect the electrical cord to a power source and the machine and push the electric-start button once to prevent the recoil starter and/or the electric starter from freezing up (electric-start models only).
- In snowy and cold conditions, some controls and moving parts may freeze. Do not use excessive force when trying to operate frozen controls. If you have difficulty operating any control or part, start the engine and let it run for a few minutes.

Maintenance

Recommended Maintenance Schedule(s)

Maintenance Service Interval	Maintenance Procedure
After the first hour	• Check the control cable and adjust it if necessary.
After the first 2 hours	• Change the engine oil.
Before each use or daily	• Check the engine-oil level and add oil if necessary.
Every 100 hours	• Replace the spark plug.
Yearly	• Check the control cable and adjust it if necessary. • Inspect the rotor blades and have an Authorized Service Dealer replace the rotor blades and scraper if necessary. • Change the engine oil.

Maintenance Safety

Read the following safety precautions before performing any maintenance on the machine:

- Shut off the engine, remove the key, and wait for all movement to stop before you leave the operator's position. Allow the machine to cool before adjusting, servicing, cleaning, or storing it.
- Always wear eye protection while performing an adjustment or repair to protect your eyes from foreign objects that the machine may throw.
- Check all fasteners at frequent intervals for proper tightness to ensure that the machine is in safe working condition.
- Do not change the governor settings on the engine.

  Purchase only genuine Toro replacement parts and accessories.

Checking and Adjusting the Control Cable

Checking the Control Cable

Service Interval: After the first hour—Check the control cable and adjust it if necessary.

Yearly—Check the control cable and adjust it if necessary.

Move the control bar back toward the handle to remove the slack in the control cable (Figure 21).

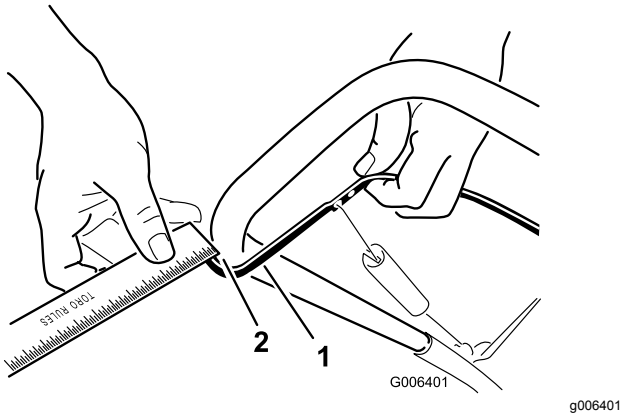

Figure 21

1. Control bar
2. 2 mm to 3 mm (1/16 inch to 1/8 inch) gap

Note: Ensure that a 2 to 3 mm (1/16 to 1/8 inch) gap exists between the control bar and the handle (Figure 21).

Important: **The control cable must contain some slack when you disengage the control bar for the rotor blades to stop properly.**

Adjusting the Control Cable

1. Slide up the spring cover and unhook the spring from the adjuster link (Figure 22).

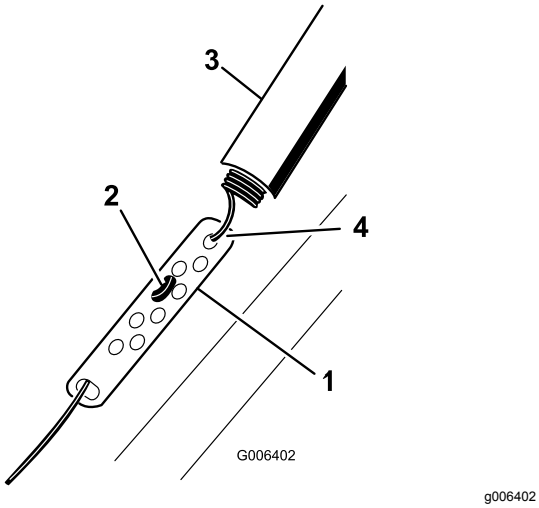

Figure 22

1. Adjuster link
2. Z-fitting
3. Spring cover
4. Unhook the spring here.

Note: You can pull up the adjuster link and cable to make unhooking the spring easier.

2. Move the Z-fitting to a higher or lower hole on the adjuster link as needed to obtain the 2 to 3 mm (1/16 to 1/8 inch) gap between the control bar and the handle (Figure 21).

   Note: Moving the Z-fitting higher decreases the gap between the control bar and the handle; moving it lower increases the gap.

3. Hook the spring to the adjuster link and slide the spring cover over the adjuster link.
4. Check the adjustment; refer to Checking the Control Cable (page 16).

   Note: After extended use, the drive belt may wear and lose its proper belt tension. If the drive belt slips (continuously squeals) under a heavy load, disconnect the spring from the adjustor link and move the upper end of the spring to the hole that is further from the pivot point in the control bar (Figure 23). Then connect the spring to the adjustor link and adjust the control cable.

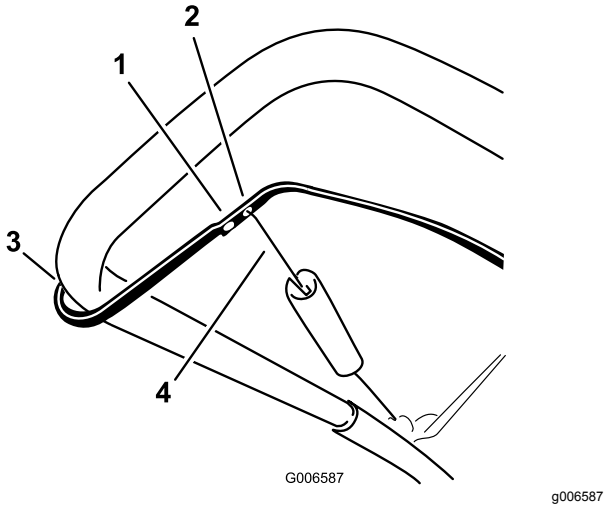

Figure 23

1. Remove the upper end of spring from this hole.
2. Insert the upper end of spring into this hole.
3. Pivot point
4. Upper end of spring

Note: The belt may slip (squeal) in wet conditions; to dry out the drive system, start the rotor and run it without a load for 30 seconds.

Inspecting the Rotor Blades

Service Interval: Yearly—Inspect the rotor blades and have an Authorized Service Dealer replace the rotor blades and scraper if necessary.

Before each session, inspect the rotor blades for wear. When a rotor-blade edge has worn down to the wear-indicator hole, have an Authorized Service Dealer replace the rotor blades and the scraper (Figure 24).

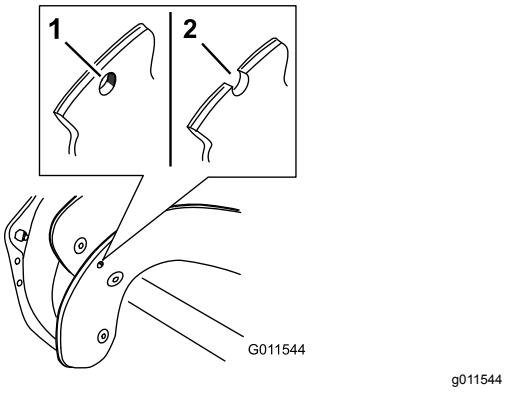

Figure 24

1. The wear-indicator hole is intact; you do not need to replace the rotor blades.
2. The wear-indicator hole is exposed; replace the rotor blades and scraper.

Changing the Engine Oil

Service Interval: After the first 2 hours

Yearly

If possible, run the engine for a few minutes before changing the oil to warm it. Warm oil flows better and carries more contaminants.

Engine Oil Specifications

Engine oil capacity	0.6 L (20 fl oz)*
Oil viscosity	Refer to Figure 27.
API service classification	SJ or higher

*There is residual oil in the crankcase after you drain the oil. Do not pour the entire capacity of oil into the crankcase. Fill the crankcase with oil as directed in the following steps.

1. Siphon the fuel from the fuel tank into an approved fuel container, or run the engine until it shuts off.
2. Move the machine to a level surface.
3. Place an oil-drain pan under the oil-drain plug, remove the plug, and tip the machine backward and drain the used oil in the pan (Figure 25).

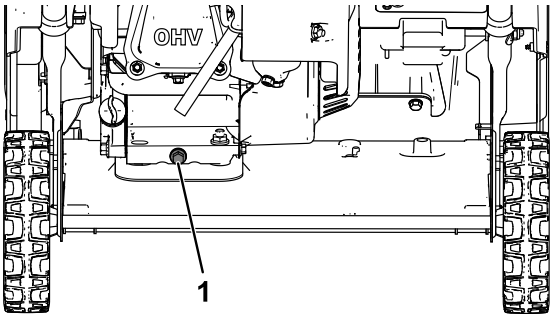

g286519

Figure 25

1. Oil-drain plug

4. After draining the used oil, return the machine to the operating position.
5. Install the oil-drain plug and tighten it securely.
6. Clean around the oil fill/dipstick.
7. Unscrew the dipstick and remove it (Figure 26).

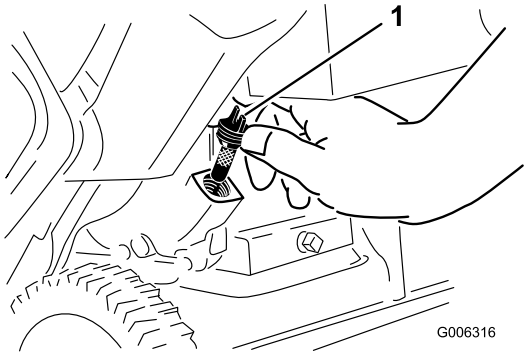

g006316

Figure 26

1. Dipstick

8. Carefully pour about 3/4 of the engine capacity of oil into the oil-fill tube.

   Note: You may tip the machine forward (handle up) to make adding oil easier. Remember to return the machine to the operating position before checking the oil level.

   Important: **Do not tip the machine all the way forward onto its nose, or fuel may leak out of the machine.**

   Use Figure 27 below to select the best oil viscosity for the outdoor temperature range expected.

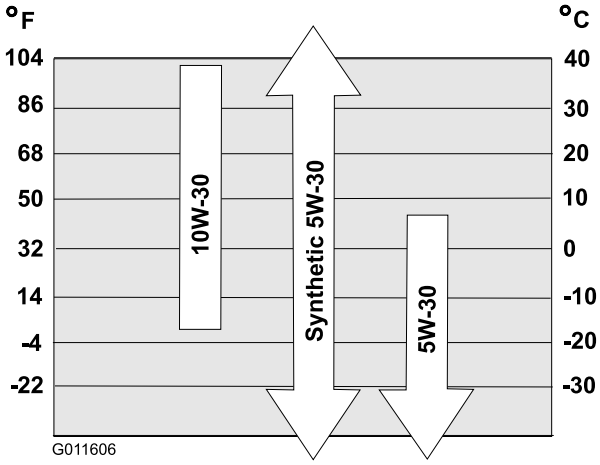

g011606

Figure 27

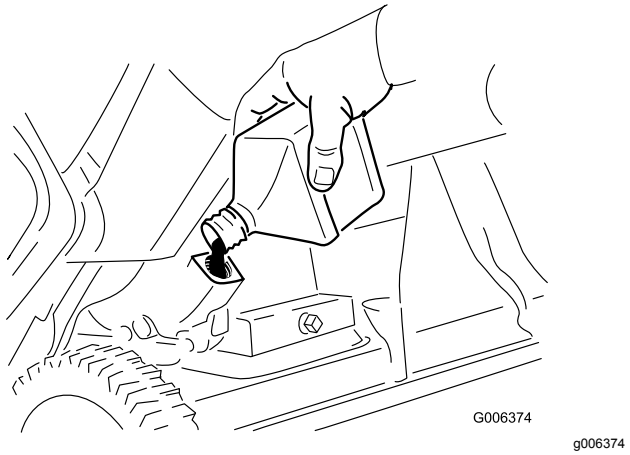

Figure 28

9. Wait 3 minutes for the oil to settle in the engine.
10. Wipe the dipstick clean with a clean cloth.
11. With the machine in the operating position, insert the dipstick into the oil-fill tube, **but do not screw it in**, then remove the dipstick.
12. Read the oil level on the dipstick.
    - If the oil level on the dipstick is too low, carefully pour a small amount of oil into the oil-fill tube, wait 3 minutes, and repeat steps 10 through 12 until the oil level on the dipstick is correct.
    - If the oil level on the dipstick is too high, drain the excess oil until the oil level on the dipstick is correct.

    Important: **If the oil level in the engine is too low or too high and you run the engine, you may damage the engine.**
13. Install the dipstick into the oil-fill tube securely.
14. Recycle the used oil properly.

Replacing the Spark Plug

Service Interval: Every 100 hours—Replace the spark plug.

⚠ WARNING

Replacing the spark plug while the engine is hot can result in burns.

Wait until the engine is cool to replace the spark plug.

Use a Toro spark plug or equivalent (Champion® RN9YC or NGK BPR6ES).

1. Remove the boot (Figure 29).

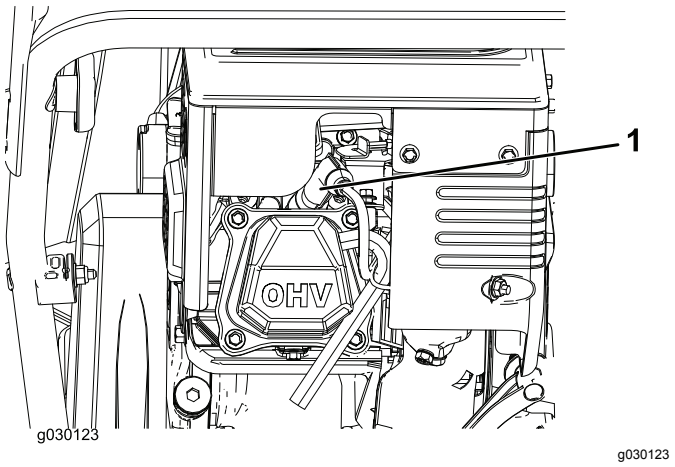

Figure 29

1. Spark-plug boot

2. Clean around the base of the spark plug.
3. Remove and discard the old spark plug.

   Note: You will need a ratchet wrench extension to remove the spark plug.
4. Set the gap between the electrodes on a new spark plug at 0.76 mm (0.030 inch) as shown in Figure 30.

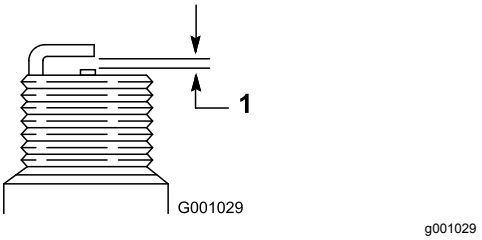

Figure 30

1. 0.76 mm (0.030 inch)

Replacing the Drive Belt

If the drive belt becomes worn, oil-soaked, excessively cracked, frayed, or otherwise damaged, replace the belt.

1. Remove the drive-belt cover by removing the 3 bolts as shown in Figure 31.

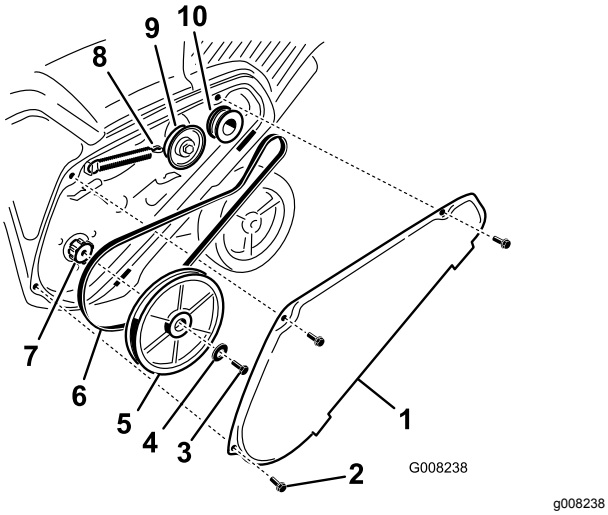

Figure 31

1.	Drive-belt cover	6.	Drive belt
2.	Bolt (3)	7.	Rotor shaft
3.	Rotor-pulley bolt	8.	Brake spring (unhook from idler arm here)
4.	Curved washer	9.	Idler pulley
5.	Rotor pulley	10.	Engine pulley

2. Unhook the brake spring from the idler arm to release the belt tension (Figure 31).
3. Remove the screw and curved washer that holds the rotor pulley (Figure 31).
4. Remove the rotor pulley and the drive belt (Figure 31).
5. Install the new drive belt, routing it as shown in Figure 32.

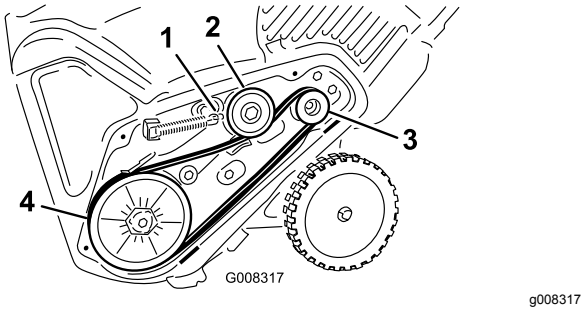

Figure 32

1.	Brake spring (install on idler arm here)	3.	Engine pulley
2.	Idler pulley	4.	Rotor pulley

Note: Route the new drive belt first around the engine pulley, then the idler pulley, and finally around the loose rotor pulley positioned just above the rotor shaft (Figure 31).

6. Install the rotor pulley onto the rotor shaft (Figure 31).
7. Install the curved washer and the rotor-pulley bolt and tighten them securely (Figure 31).

Note: The concave side of the curved washer goes against the outside of the pulley.

8. Install the brake spring onto the idler arm (Figure 32).
9. Install the drive-belt cover with the bolts that you removed in step 1.

Note: Ensure that the drive belt is properly adjusted and operating; refer to Checking the Control Cable (page 16) and Adjusting the Control Cable (page 17).

Adjusting the Quick Shoot Control

Model 38756

If there is more than 13 mm (1/2 inch) of slack in the Quick Shoot cable (Figure 33) or the discharge chute does not rotate left and right in equal angles, adjust the Quick Shoot control cables.

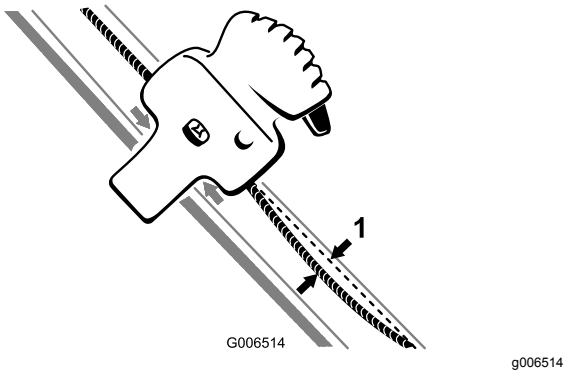

Figure 33

1. 13 mm (1/2 inch) maximum slack

1. Loosen the 2 Quick Shoot control-cable clamps (Figure 34).

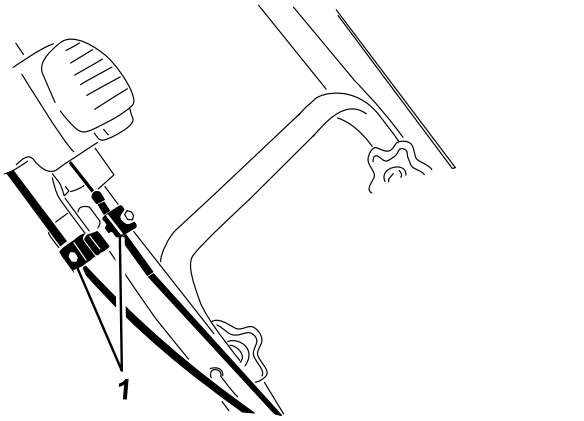

Figure 34

1. Cable clamps

2. Position the Quick Shoot control between the 2 arrows located on the right side of the upper handle (Figure 35).

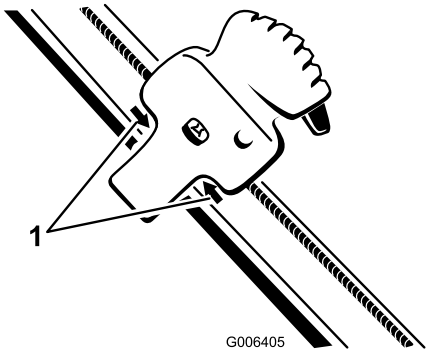

g006405

Figure 35

1. Arrows

3. Rotate the discharge chute so that it faces straight ahead and the arrow on the back of the discharge chute aligns with the arrow on the shroud (Figure 36).

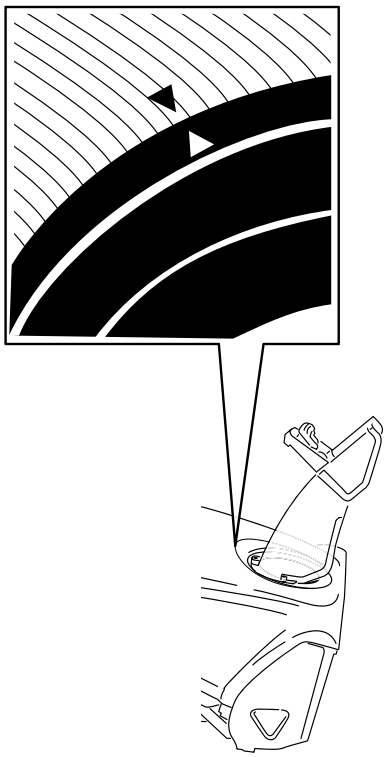

g286564

Figure 36

4. Hold the discharge chute in the straight-ahead position, pull the lower cable casing downward until you remove the slack in the cable, and tighten the screw on the lower cable clamp securely (Figure 37).

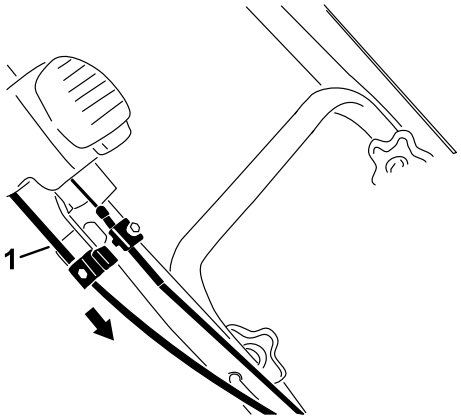

g286565

Figure 37

1. Lower cable casing

5. Pull the upper cable casing forward until you remove the slack in the cable, and tighten the screw on the upper cable clamp securely (Figure 38).

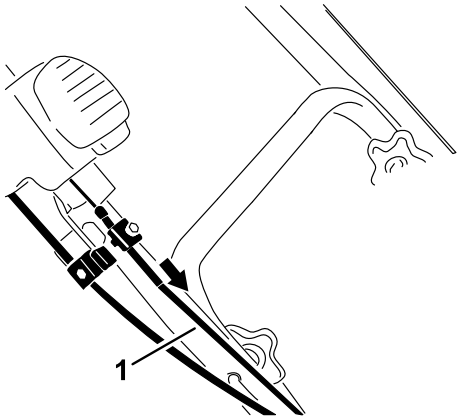

g286566

Figure 38

1. Upper cable casing

Note: Do not over-tension the cables. If the cables are over-tensioned, the Quick Shoot will be hard to operate.

Storage

Storage Safety

- Shut off the engine, remove the key, and wait for all movement to stop before you leave the operator's position. Allow the machine to cool before adjusting, servicing, cleaning, or storing it.
- Fuel fumes are highly flammable, explosive, and dangerous if inhaled. If you store the product in an area with an open flame, the fuel fumes may ignite and cause an explosion.
- Do not store the machine in a house (living area), basement, or any other area where ignition sources may be present, such as hot water and space heaters, clothes dryers, furnaces, and other appliances.
- Do not tip the machine either forward or backward with fuel in the fuel tank; otherwise, fuel may leak out of the machine.
- Do not store the machine with its handle tipped down onto the ground; otherwise, oil may leak into the engine cylinder and onto the ground, and the engine may not start.

Storing the Machine

1. On the last refueling of the season, add fuel stabilizer to fresh fuel as directed by the fuel-stabilizer manufacturer.

   Important: **Do not store fuel longer than that suggested by the fuel-stabilizer manufacturer.**
2. Run the engine for 10 minutes to distribute the conditioned fuel through the fuel system.
3. Shut off the engine, allow it to cool, and siphon the fuel tank or run the engine until it shuts off.
4. Start the engine and run it until it shuts off.
5. Choke or prime the engine, start it a third time, and run the engine until it does not start.
6. Drain the fuel in the carburetor through the carburetor-drain bolt into an approved gasoline container.
7. Dispose of unused fuel properly. Recycle it according to local codes.
8. While the engine is still warm, change the engine oil. Refer to Changing the Engine Oil (page 18).
9. Remove the spark plug.
10. Squirt 10 ml (2 tsp) of oil into the spark-plug hole.
11. Install the spark plug by hand and then torque it to 27 to 30 N·m (20 to 22 ft-lb).
12. With the key removed, pull the recoil-start handle slowly to distribute the oil on the inside of the cylinder.
13. Clean the machine.
14. Touch up chipped surfaces with paint available from an Authorized Service Dealer. Sand affected areas before painting, and use a rust preventative to prevent the metal parts from rusting.
15. Tighten any loose fasteners. Repair or replace any damaged parts.
16. Cover the machine and store it in a clean, dry place out of the reach of children. Allow the engine to cool before storing the machine in any enclosure.

California Proposition 65 Warning Information

What is this warning?

You may see a product for sale that has a warning label like the following:

WARNING: Cancer and Reproductive Harm—www.p65Warnings.ca.gov.

What is Prop 65?

Prop 65 applies to any company operating in California, selling products in California, or manufacturing products that may be sold in or brought into California. It mandates that the Governor of California maintain and publish a list of chemicals known to cause cancer, birth defects, and/or other reproductive harm. The list, which is updated annually, includes hundreds of chemicals found in many everyday items. The purpose of Prop 65 is to inform the public about exposure to these chemicals.

Prop 65 does not ban the sale of products containing these chemicals but instead requires warnings on any product, product packaging, or literature with the product. Moreover, a Prop 65 warning does not mean that a product is in violation of any product safety standards or requirements. In fact, the California government has clarified that a Prop 65 warning "is not the same as a regulatory decision that a product is 'safe' or 'unsafe.'" Many of these chemicals have been used in everyday products for years without documented harm. For more information, go to https://oag.ca.gov/prop65/faqs-view-all.

A Prop 65 warning means that a company has either (1) evaluated the exposure and has concluded that it exceeds the "no significant risk level"; or (2) has chosen to provide a warning based on its understanding about the presence of a listed chemical without attempting to evaluate the exposure.

Does this law apply everywhere?

Prop 65 warnings are required under California law only. These warnings are seen throughout California in a wide range of settings, including but not limited to restaurants, grocery stores, hotels, schools, and hospitals, and on a wide variety of products. Additionally, some online and mail order retailers provide Prop 65 warnings on their websites or in catalogs.

How do the California warnings compare to federal limits?

Prop 65 standards are often more stringent than federal and international standards. There are various substances that require a Prop 65 warning at levels that are far lower than federal action limits. For example, the Prop 65 standard for warnings for lead is 0.5 µg/day, which is well below the federal and international standards.

Why don't all similar products carry the warning?

- Products sold in California require Prop 65 labelling while similar products sold elsewhere do not.
- A company involved in a Prop 65 lawsuit reaching a settlement may be required to use Prop 65 warnings for its products, but other companies making similar products may have no such requirement.
- The enforcement of Prop 65 is inconsistent.
- Companies may elect not to provide warnings because they conclude that they are not required to do so under Prop 65; a lack of warnings for a product does not mean that the product is free of listed chemicals at similar levels.

Why does Toro include this warning?

Toro has chosen to provide consumers with as much information as possible so that they can make informed decisions about the products they buy and use. Toro provides warnings in certain cases based on its knowledge of the presence of one or more listed chemicals without evaluating the level of exposure, as not all the listed chemicals provide exposure limit requirements. While the exposure from Toro products may be negligible or well within the "no significant risk" range, out of an abundance of caution, Toro has elected to provide the Prop 65 warnings. Moreover, if Toro does not provide these warnings, it could be sued by the State of California or by private parties seeking to enforce Prop 65 and subject to substantial penalties.

TORO®

Count on it.