Form No. 3423-981 Rev B

12V Electrical Accessory Port Kit

CT Series Turf Mowers or Groundsmaster® 3400 Traction Unit

Model No. 02902

Installation Instructions

Introduction

This kit provides a 12V power outlet for a MP3 player, mobile device, 2-way radio, or similar low-power device. Use this kit on the CT series and GM3400 machines.

⚠ WARNING

CALIFORNIA
Proposition 65 Warning

Use of this product may cause exposure to chemicals known to the State of California to cause cancer, birth defects, or other reproductive harm.

Installation

Loose Parts

Use the chart below to verify that all parts have been shipped.

Procedure	Description	Qty.	Use
1	No parts required	–	Prepare the machine.
2	No parts required	–	Disconnect the battery.
3	No parts required	–	Open the control console.
4	Accessory-port bracket Accessory port Countersunk-head screws (3 x 20 mm)	1 1 3	Install the accessory port.
5	No parts required	–	Install the fuse (15 A).
6	No parts required	–	Connect the negative battery cable.
7	Serial label	1	Complete the accessory port installation.

Note: Determine the left and right sides of the machine from the normal operating position.

© 2018—The Toro® Company
8111 Lyndale Avenue South
Bloomington, MN 55420

Register at www.Toro.com.

CE

Original Instructions (EN)
Printed in the USA
All Rights Reserved

3423-981 B

1

Preparing the Machine

No Parts Required

Procedure

1. Park the machine on a level surface.
2. Shut off the cutting units.
3. Lower the cutting units.
4. Engage the parking brake, shut off the engine, remove the key, and wait for all movement to stop before leaving the operator's seat.

2

Disconnecting the Battery

No Parts Required

Procedure

1. Open the hood; refer to the Operator's Manual for your machine.
2. Lift the cover of the of the negative battery cable (Figure 1).

   Note: Lifting the cover loosens the battery cable clamp.

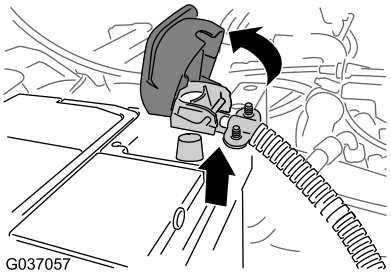

g037057

Figure 1

3. Remove the negative battery cable from the battery (Figure 1).

   Note: Position the negative-battery cable where it cannot contact the negative battery post.

3

Accessing the Console

No Parts Required

Procedure

1. Remove the 6 screws and 6 washers that secure the control panel to the console (Figure 2).

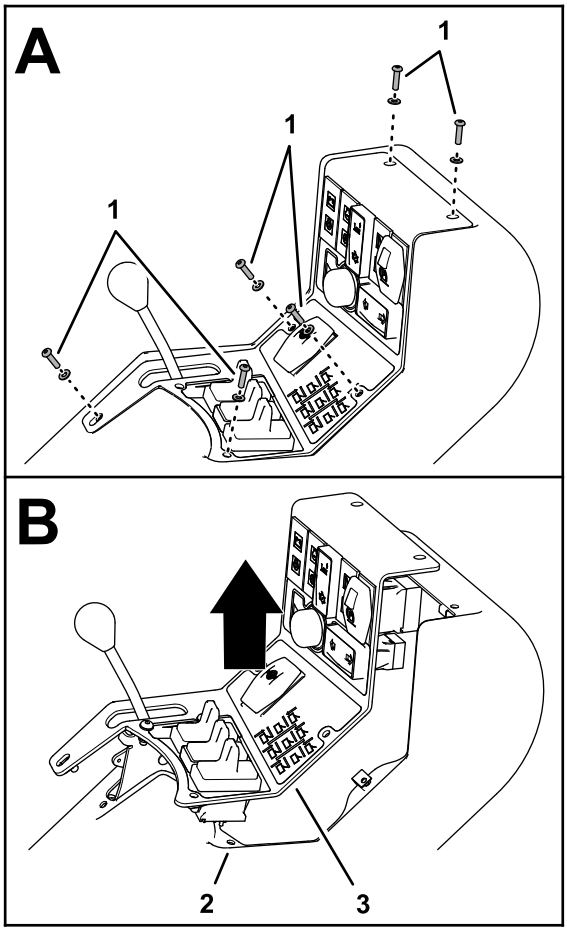

g274287

Figure 2

1. Screws and washers
2. Control panel
3. Console

2. Lift the panel enough to provide access to the interior of the console (Figure 2).

4

Installing the Accessory Port

Parts needed for this procedure:

1	Accessory-port bracket
1	Accessory port
3	Countersunk-head screws (3 x 20 mm)

Procedure

1. Cut a hole in the decal at the rear of the console arm (Figure 3).

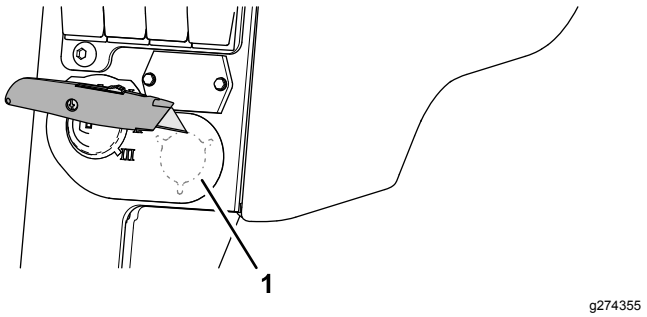

Figure 3

1. Decal

2. Working inside the console, locate the unused socket-terminal connectors for the white/red wire and the black wire, and assemble the accessory-port bracket over the wires (Figure 4).

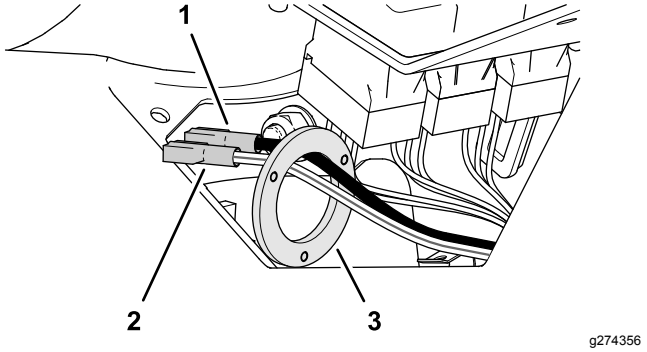

Figure 4

1. Socket-terminal connector (black wire)
2. Socket-terminal connector (white/red)
3. Accessory-port bracket

3. Route the connectors and wires through the hole in the console arm (Figure 5).

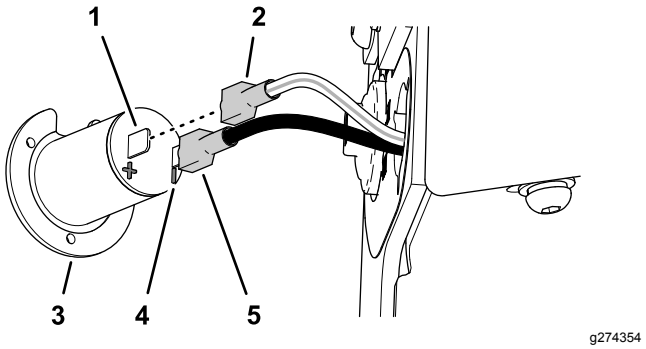

Figure 5

1. (+) spade connector
2. Socket-terminal connector (white/red wire)
3. Accessory port
4. (-) spade connector
5. Socket-terminal connector (black wire)

4. Connect the terminal for the black wire to the (-) spade connector of the accessory port (Figure 5).
5. Connect the terminal for the white/red wire to the (+) spade connector of the accessory port (Figure 5).
6. Assemble the accessory into the hole in the console (Figure 6).

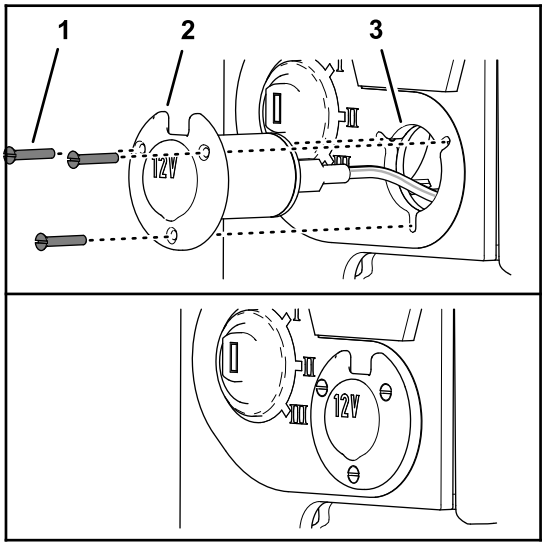

Figure 6

1. Countersunk-head screws (3 x 20 mm)
2. Accessory port
3. Console arm

7. Working inside the console, assemble the accessory-port bracket over the accessory port, and align the holes in the port and bracket with the slots in the console arm.
8. Secure the port to the console and bracket (Figure 6) with the 3 countersunk-head screws (3 x 20 mm).

5

Installing the Fuse

No Parts Required

Procedure

1. Remove the cover from the fuse block (Figure 7).

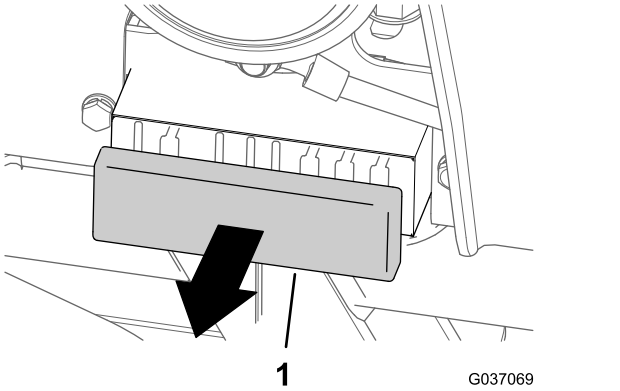

Figure 7

1. Cover (fuse block)

2. Insert the fuse (15 A) into the 2nd slot from the left side of the fuse block (Figure 8).

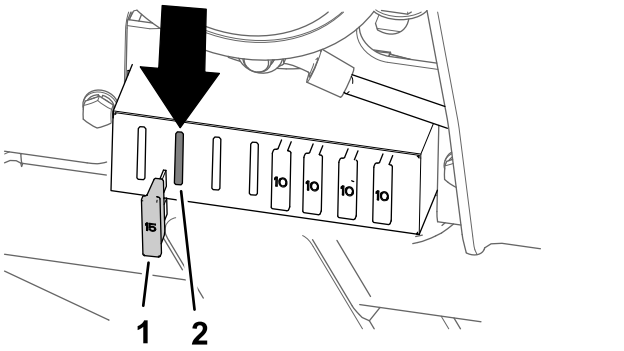

Figure 8

1. Fuse (15 A)
2. Fuse-block socket (2nd slot from the left)

3. Install the cover on to the fuse block (Figure 7).

6

Connecting the Negative Battery Cable

No Parts Required

Procedure

1. Assemble the negative battery cable onto the negative battery post (Figure 9).

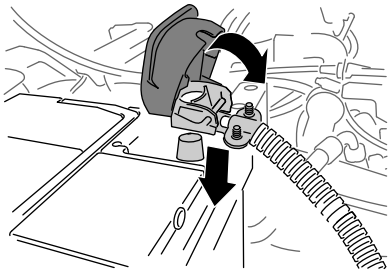

Figure 9

2. Align the insulator cover of the battery-cable terminal and close the cover (Figure 9).

   Note: Closing the cover tightens the battery cable clamp.

3. Plug the cord of a low-power device into the socket of the accessory port. Ensure that the port supplies 12 VDC to an attached device.

   Note: If the accessory port does not supply 12 VDC, check the fuse and electrical connections.

7

Completing the Accessory Port Installation

Parts needed for this procedure:

1	Serial label

Installing the Control Panel

1. Align the holes in the control panel with the holes in the console (Figure 10).

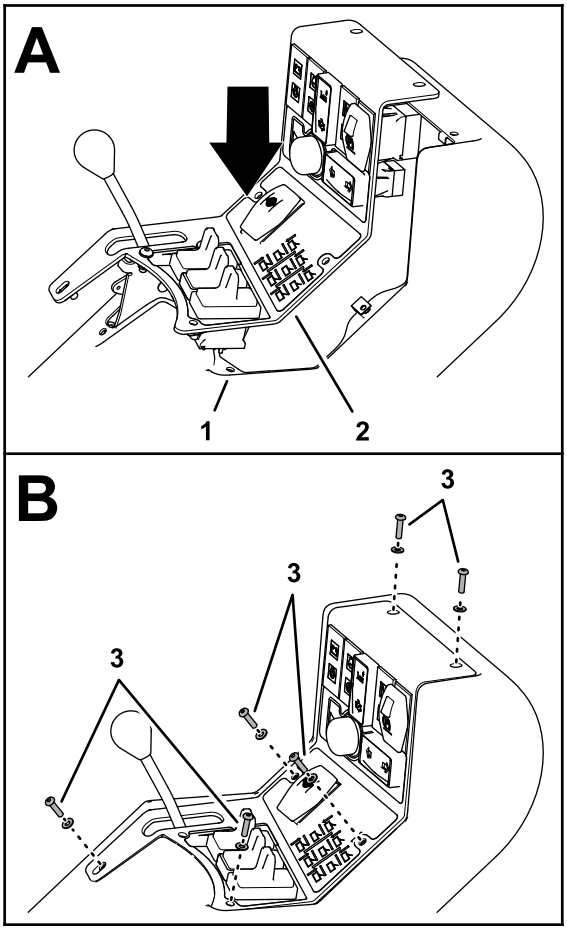

g274375

Figure 10

1. Console
2. Control panel
3. Screws and washers

2. Assemble the control panel to the console (Figure 10) with the 6 screws and 6 washers that you removed in 3 Accessing the Console (page 2).

Closing the Hood

Close and latch the hood.

Affixing the Serial Label

1. Clean the surface adjacent to the serial decal for the machine (Figure 11).

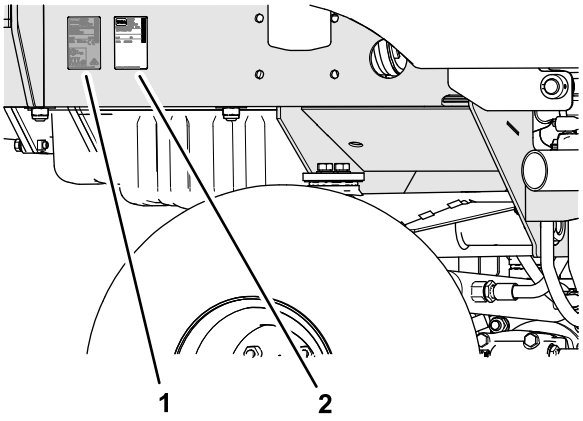

g274526

Figure 11

1. Serial decal (machine)
2. Serial decal (accessory-port kit)

2. Remove the backing from the serial decal from the accessory-port kit.
3. Affix the serial decal to the surface adjacent to the serial plate for the machine (Figure 11).

Operation

The 12 VDC socket is permanently powered through the fuse (15 A).

Connecting Low-Power Device to the Accessory Port

1. Remove the protective rubber cap from the socket of the accessory port (Figure 12).

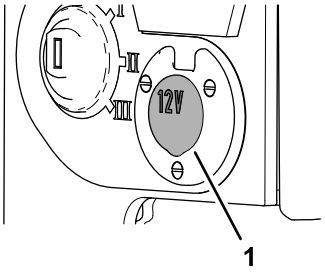

g274408

Figure 12

1. Rubber cap

2. Check the socket for moisture and dirt.

   If you see moisture or dirt, dry and clean the socket.
3. Plug power cord of the 12 VDC device into the accessory port.

Disconnecting Low-Power Device from the Accessory Port

1. Remove the power cord of the 12 VDC device from the accessory port.
2. Install the protective rubber cap onto the port; refer to Figure 12 in Connecting Low-Power Device to the Accessory Port (page 5).

Maintenance

Maintaining the Accessory Port

Service Interval: Monthly

- Check the socket for moisture and dirt.
  - Dry and clean the socket as needed.
  - Check the condition of the rubber cap.
- Check that the drain holes in the socket are clear of dust and debris.
- Apply a light coat electrical grease to the contacts in the socket.

EEA/UK Privacy Notice

Toro's Use of Your Personal Information

The Toro Company ("Toro") respects your privacy. When you purchase our products, we may collect certain personal information about you, either directly from you or through your local Toro company or dealer. Toro uses this information to fulfil contractual obligations - such as to register your warranty, process your warranty claim or to contact you in the event of a product recall - and for legitimate business purposes - such as to gauge customer satisfaction, improve our products or provide you with product information which may be of interest. Toro may share your information with our subsidiaries, affiliates, dealers or other business partners in connection these activities. We may also disclose personal information when required by law or in connection with the sale, purchase or merger of a business. We will never sell your personal information to any other company for marketing purposes.

Retention of your Personal Information

Toro will keep your personal information as long as it is relevant for the above purposes and in accordance with legal requirements. For more information about applicable retention periods please contact legal@toro.com.

Toro's Commitment to Security

Your personal information may be processed in the US or another country which may have less strict data protection laws than your country of residence. Whenever we transfer your information outside of your country of residence, we will take legally required steps to ensure that appropriate safeguards are in place to protect your information and to make sure it is treated securely.

Access and Correction

You may have the right to correct or review your personal data, or object to or restrict the processing of your data. To do so, please contact us by email at legal@toro.com. If you have concerns about the way in which Toro has handled your information, we encourage you to raise this directly with us. Please note that European residents have the right to complain to your Data Protection Authority.



Count on it.