Form No. 3427-619 Rev B

TORO®

Count on it.

Operator's Manual

# 18in and 21in 11-Blade and 14-Blade EdgeSeries Cutting Units

## Greensmaster® Flex™/eFlex® 1820 and 2120 Traction Units

**Model No. 04289—Serial No. 403460001 and Up**
**Model No. 04290—Serial No. 403460001 and Up**
**Model No. 04291—Serial No. 403460001 and Up**
**Model No. 04292—Serial No. 403460001 and Up**

Register at www.Toro.com.
Original Instructions (EN)

CE

*3427-619* B

This product complies with all relevant European directives. For details, please see the Declaration of Incorporation (DOI) at the back of this publication.

# Introduction

This cutting unit is designed for cutting turf on greens and small fairways of golf courses. Using this product for purposes other than its intended use could prove dangerous to you and bystanders.

Read this information carefully to learn how to operate and maintain your product properly and to avoid injury and product damage. You are responsible for operating the product properly and safely.

Visit www.Toro.com for product safety and operation training materials, accessory information, help finding a dealer, or to register your product.

Whenever you need service, genuine Toro parts, or additional information, contact an Authorized Service Dealer or Toro Customer Service and have the model and serial numbers of your product ready. Figure 1 identifies the location of the model and serial numbers on the product. Write the numbers in the space provided.

***Important:*** **With your mobile device, you can scan the QR code on the serial number plate (if equipped) to access warranty, parts, and other product information.**

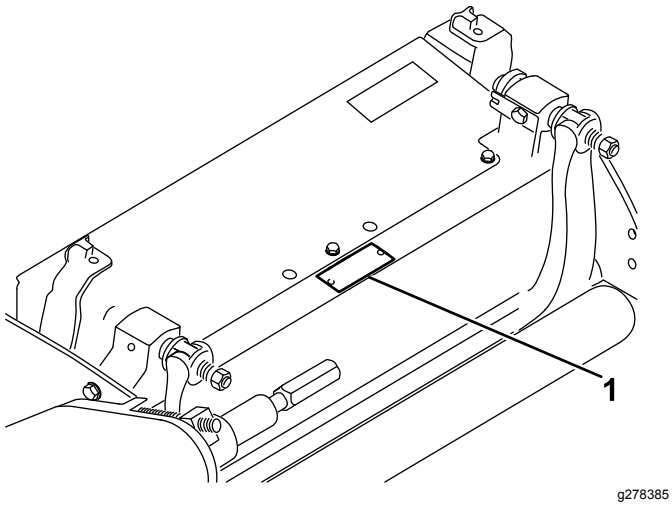


g278385

**Figure 1**

1. Model and serial number location

**Model No.** _____

**Serial No.** _____

This manual identifies potential hazards and has safety messages identified by the safety-alert symbol (Figure 2), which signals a hazard that may cause serious injury or death if you do not follow the recommended precautions.



g000502

**Figure 2**

Safety-alert symbol

This manual uses 2 words to highlight information. **Important** calls attention to special mechanical information and **Note** emphasizes general information worthy of special attention.

# Contents


Safety ..... 3
- General Safety ..... 3
- Cutting Unit Safety ..... 3
- Blade Safety ..... 3
- Safety and Instructional Decals ..... 4

Setup ..... 5
- Installing the Roller ..... 5
- Preparing the Cutting Unit for Use on an eFlex Machine ..... 5
- Installing the Push Nut (CE Only) ..... 6
- Adjusting the Cutting Unit ..... 6

Product Overview ..... 7
- Specifications ..... 7
- Attachments/Accessories ..... 7

Operation ..... 7

Maintenance ..... 8
- Supporting the Cutting Unit ..... 8
- Adjusting the Bedknife to Reel Contact ..... 8
- Grinding the Bedknife ..... 9
- Adjusting the Rear Roller Height ..... 11
- Adjusting the Height of Cut ..... 11
- Adjusting the Clip Setting ..... 13
- Adjusting the Cut-Off Bar ..... 14
- Servicing the Bedbar/Bedknife ..... 14
- Backlapping the Reel ..... 17



© 2018—The Toro® Company


8111 Lyndale Avenue South
Bloomington, MN 55420





Contact us at www.Toro.com.
Printed in the USA
All Rights Reserved

# Safety

This machine has been designed in accordance with EN ISO 5395 and ANSI B71.4–2017.

# General Safety

This product is capable of amputating hands and feet. Always follow all safety instructions to avoid serious personal injury.

- Read and understand the contents of this *Operator's Manual* before starting the machine.
- Use your full attention while operating the machine. Do not engage in any activity that causes distractions; otherwise, injury or property damage may occur.
- Do not put your hands or feet near moving components of the machine.
- Do not operate the machine without all guards and other safety protective devices in place and functioning properly on the machine.
- Keep clear of any discharge opening.
- Keep bystanders and children out of the operating area. Never allow children to operate the machine.
- Before you leave the operator's position, do the following:
  - Park the machine on a level surface.
  - Lower the cutting unit(s).
  - Disengage the drives.
  - Engage the parking brake (if equipped).
  - Shut off the engine and remove the key (if equipped).
  - Wait for all movement to stop.

Improperly using or maintaining this machine can result in injury. To reduce the potential for injury, comply with these safety instructions and always pay attention to the safety-alert symbol⚠, which means Caution, Warning, or Danger—personal safety instruction. Failure to comply with these instructions may result in personal injury or death.

# Cutting Unit Safety

- The cutting unit is only a complete machine when installed on a traction unit. Read the traction unit *Operator's Manual* carefully for complete instructions on the safe use of the machine.
- Stop the machine, remove the key (if equipped), and wait for all movement to stop before inspecting the attachment after striking an object or if there is an abnormal vibration in the machine. Make all necessary repairs before resuming operation.
- Keep all parts in good working condition and all hardware tightened. Replace all worn or damaged decals.
- Use only accessories, attachments, and replacement parts approved by Toro.

# Blade Safety

A worn or damaged blade can break, and a piece of the blade could be thrown toward you or bystanders, resulting in serious personal injury or death.

- Inspect the blade periodically for wear or damage.
- Use care when checking the blades. Wrap the blades or wear gloves, and use caution when servicing the blades. Only replace or sharpen the blades; never straighten or weld them.
- On multi-bladed machines, take care as rotating 1 blade can cause other blades to rotate.

# Safety and Instructional Decals

Safety decals and instructions are easily visible to the operator and are located near any area of potential danger. Replace any decal that is damaged or missing.

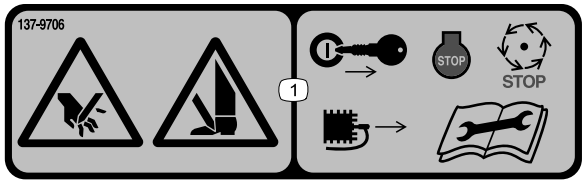


decal137-9706

**137-9706**

1. Cutting hazard of the hand or foot—shut off the engine, remove the key, wait for all moving parts to stop, disconnect the spark plug, and read the *Operator's Manual* before performing maintenance.

---




decal120-9570

**120-9570**

1. Warning—stay away from moving parts, keep all guards and shields in place.

---

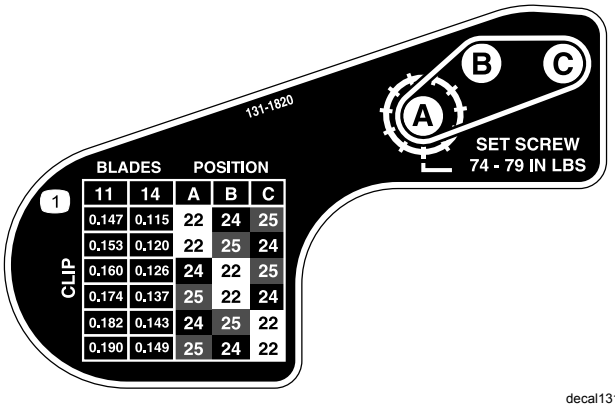


decal131-1820

**131-1820**

1. Cutting-unit clip chart

---

# Setup

## Media and Additional Parts

| Description | Qty. | Use |
|---|---|---|
| Operator's Manual | 1 | Read this before installing and operating cutting unit. |

# Installing the Roller

The cutting unit is shipped without a front roller. Obtain a roller from your authorized Toro distributor and install it on the cutting unit, as follows:

1. Remove the plow bolt, washer, and flange locknut securing one of the height-of-cut arms to the cutting unit side plate (Figure 3).

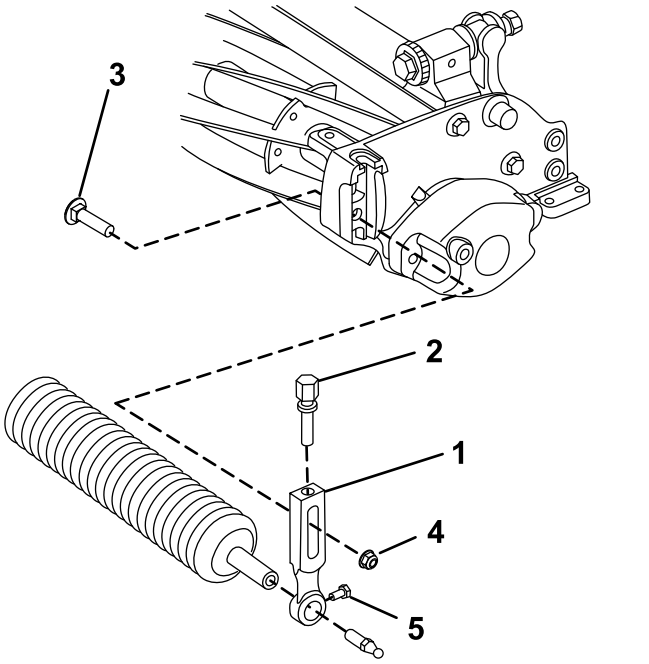


**Figure 3**

1. Height-of-cut arm
2. Adjusting screw
3. Plow bolt
4. Flange locknut
5. Roller-mounting screw

2. Loosen the roller-mounting screws in the height-of-cut arms.
3. Slide the roller shaft into the height-of-cut arm on the opposite end of the cutting unit.
4. Slide the height-of-cut arm onto the roller shaft.
5. Loosely secure the roller to the cutting unit with the height-of-cut arm and fasteners previously removed.
6. Center the roller between the height-of-cut arms.
7. Tighten the roller-mounting screws.
8. Adjust to the desired height-of-cut and tighten the height-of-cut arm mounting fasteners.

# Preparing the Cutting Unit for Use on an eFlex Machine

## Installing the Target Plate

If you will be using the cutting unit on an eFlex traction unit, install the provided target plate, then adjust the machine sensors as described in the *eFlex Traction Unit Operator's Manual*. If you will be using the cutting unit on gasoline-powered machines, you do not need the target plate. If you will be using the cutting unit on both gasoline-powered units and the eFlex machines, you can install the target plate and leave it installed regardless of which machine you use it on.

1. Remove the center, grass-shield bolt (Figure 4).
2. Install the target plate to the top of the cutting unit using the bolt that you removed previously (Figure 4).

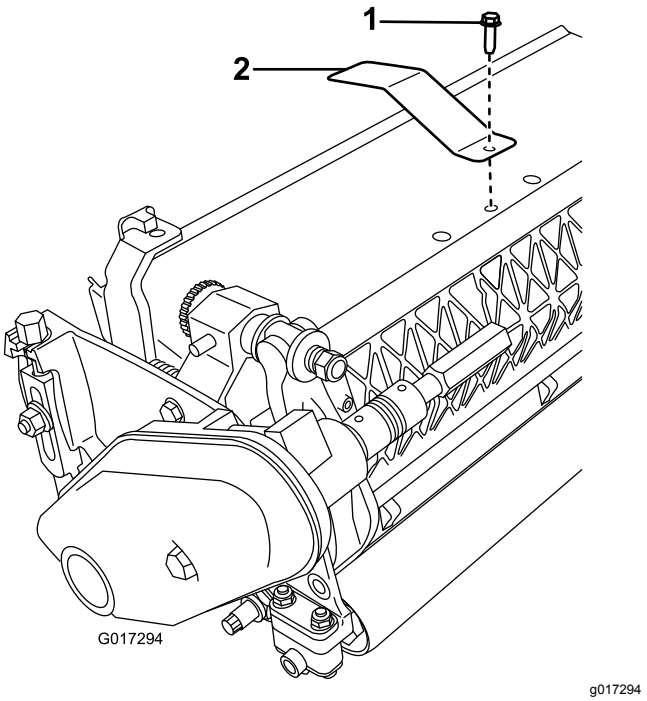


**Figure 4**

1. Center, grass-shield bolt
2. Target plate

## Installing the Weight Rod

1. Enlarge the lower hole on the right side of the cutting unit using a 9 mm (23/64 inch) drill bit (Figure 5).

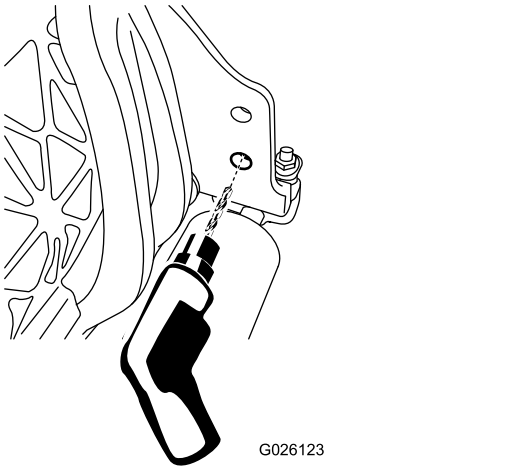


**Figure 5**

2. Lubricate the O-ring on the weight rod.
3. Insert the O-ring end of the weight rod into the previously drilled hole.
4. Secure the threaded end of the weight rod to the frame using a flange-head bolt (Figure 6).

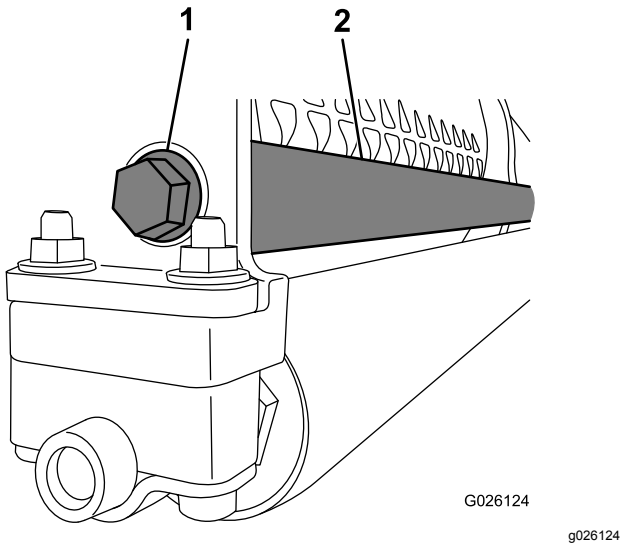


**Figure 6**

1. Flange-head bolt
2. Weight rod

## Installing the Push Nut (CE Only)

1. Loosen the flange bolt securing the belt cover and remove the belt cover.
2. Slide the push nut onto the belt cover plug (Figure 7).

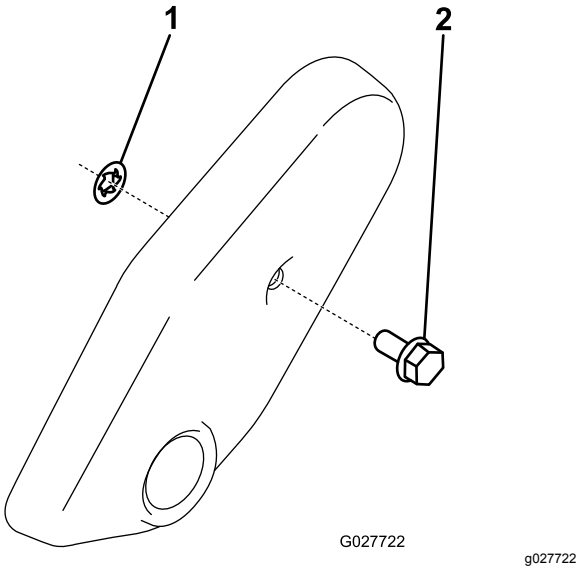


**Figure 7**

1. Push nut
2. Belt-cover plug

3. Install the belt cover.

## Adjusting the Cutting Unit

1. Support the cutting unit; refer to Supporting the Cutting Unit (page 8).
2. Adjust the bedknife to the reel; refer to Adjusting the Bedknife to Reel Contact (page 8).
3. Adjust the rear roller height; refer to Adjusting the Rear Roller Height (page 11).
4. Adjust the height of cut; refer to Adjusting the Height of Cut (page 11).
5. Adjust the cut-off bar; refer to Adjusting the Cut-Off Bar (page 14).
6. Set up and prepare the cutting unit as described in the traction unit *Operator's Manual*.

# Product Overview

## Specifications

| | |
|---|---|
| Tractors | These cutting units mount on the appropriate size Flex and eFlex Traction Units. |
| Cutting width | Flex/eFlex 1820—46 cm (18 inches), Flex/eFlex 2120—53 cm (21 inches) |
| Height-of-cut | Adjust the front roller by 2 vertical screws and held by 2 screws and nuts. |
| Height-of-cut range | The standard bench height-of-cut range is 1.6 mm (0.062 inch) to 12.7 mm (0.500 inch). The bench height-of-cut range with the High Height of Cut Kit installed is 7 mm (0.285 inch) to 25 mm (1.00 inch). The effective HOC may vary depending on turf conditions, type of bedknife, rollers, and attachments installed. |
| Reel bearings | There are 2 sealed stainless steel, deep-groove ball bearings. |
| Rollers | The front roller is 6.3 cm (2.5 inches) in diameter with a variety of configurations selected by the customer. The rear roller is a 5.1 cm (2 inch) diameter aluminum full roller. |
| Bedknife | This machine comes standard with an EdgeMax Microcut bedknife. Optional bedknives with a variety of configurations are available. The bedknife is fastened to a machined, cast-iron bedbar with 13 screws (2120) or 11 screws (1820). |
| Bedknife adjustment | There is a dual-screw adjustment to the reel with detents corresponding to 0.018 mm (0.0007 inch) bedknife movement for each indexed position. |
| Grass shield | The non-adjustable shield with adjustable cut-off bar improves grass discharge from the reel in wet conditions. |
| Counterweight | A cast-iron weight mounted opposite to the drive line balances the cutting unit. |
| Net weight, 2120 (without front roller) | 11–Blade—32.2 kg (71 lb); 14–Blade—33.5 kg (74 lb) |
| Net weight, 1820 (without front roller) | 11–Blade—30.8 kg (68 lb); 14–Blade—32.2 kg (71 lb) |

### Attachments/Accessories

A selection of Toro approved attachments and accessories is available for use with the machine to enhance and expand its capabilities. Contact your Authorized Service Dealer or authorized Toro distributor or go to www.Toro.com for a list of all approved attachments and accessories.

To ensure optimum performance and continued safety certification of the machine, use only genuine Toro replacement parts and accessories. Replacement parts and accessories made by other manufacturers could be dangerous, and such use could void the product warranty.

# Operation

Refer to your traction unit *Operator's Manual* for detailed operation instructions. Before using the cutting unit each day, adjust the bedknife; refer to Adjusting the Bedknife to Reel Contact (page 8). Test the quality of cut by cutting a test swath before using the cutting unit on a green to ensure that the finished cut is correct.

# Maintenance

**Note:** Determine the left and right sides of the machine from the normal operating position.

## Supporting the Cutting Unit

Whenever you need to tip the cutting unit to expose the bedknife/reel, prop up the rear of the cutting unit to ensure that the nuts on the back end of the bedbar adjusting screws are not resting on the work surface (Figure 8).

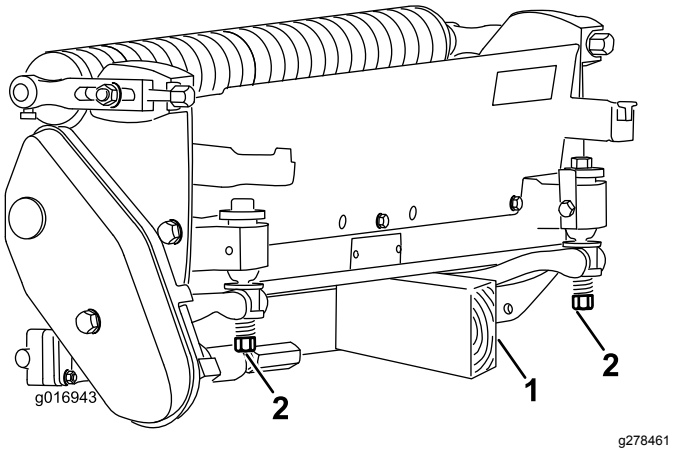


**Figure 8**

1. Prop (not provided)
2. Bedknife adjusting screw nut (2)

## Adjusting the Bedknife to Reel Contact

### Adjusting the Bedknife Daily

Prior to mowing each day, or as required, check each cutting unit to verify proper bedknife-to-reel contact. **Perform this check even though quality of cut is acceptable.**

1. Lower the cutting units onto a hard surface.
2. Shut off the machine as follows:
   - Gas units: Shut off the engine and disconnect the spark-plug wire.
   - Electric units: Turn off the machine and disconnect the battery connector (T-handle).
3. Slowly rotate the reel in a reverse direction, listening for reel-to-bedknife contact.
   - If no contact is evident, turn the bedbar adjusting screws clockwise (Figure 9), 1 click at a time, until you feel and hear light contact.

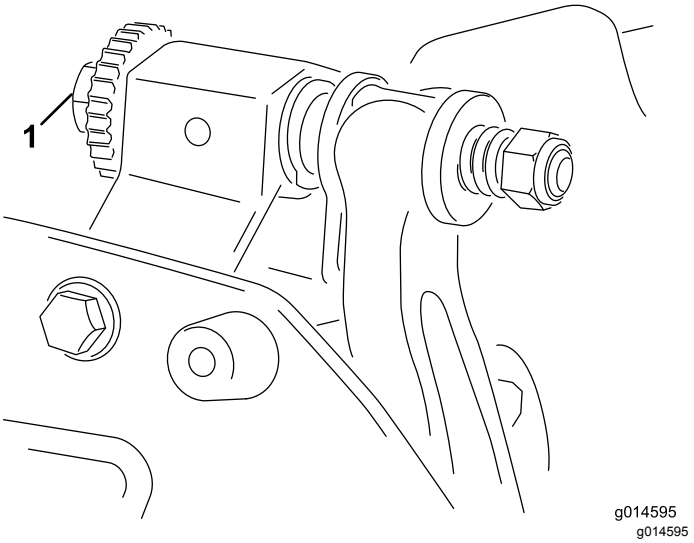


**Figure 9**

1. Bedbar adjusting screw

**Note:** The reel must cut one sheet of paper, when inserted at a right angle to the bedknife, at both ends and the center of the reel.

**Note:** The bedbar adjusting screws have detents corresponding to 0.018 mm (0.0007 inch) bedknife movement for each indexed position.

- If excessive contact/reel drag is evident, you need to backlap, reface the front of the bedknife, or regrind the cutting unit to achieve the sharp edges needed for precision cutting (Refer to the *Toro Manual for Sharpening Reel and Rotary Mowers*, Form No. 09168SL).

***Important:*** **Light contact is preferred at all times. If you do not maintain light contact, the bedknife/reel edges will not sufficiently self-sharpen, and dull cutting edges will result after a period of operation. If you maintain excessive contact, bedknife/reel wear will be accelerated, uneven wear can result, and the quality of cut may decline.**

**Note:** For eFlex cutting units, the reel-to-bedknife contact has a significant impact on energy consumption. Very light contact is best for cutting performance and battery consumption.

**Note:** As the reel blades continue to run against the bedknife, a slight burr will appear on the front cutting edge surface along the full length of the bedknife. Occasionally run a file across the front edge to remove this burr to improve cutting.

After extended running, a ridge eventually develops at both ends of the bedknife. Round

off these notches or file them flush with the cutting edge of the bedknife to ensure smooth operation.

## Adjusting the Bedknife after Grinding, Backlapping, or Disassembly

Use this procedure after grinding, backlapping, or disassembling the reel. This is not a daily adjustment.

**Note:** For eFlex cutting units, the reel-to-bedknife contact has a significant impact on energy consumption. Very light contact is best for cutting performance and battery consumption.

1. Position the cutting unit on a flat, level work surface.
2. Tip the cutting unit to expose the bedknife and reel.

   **Note:** Ensure that the nuts on the back of the bedbar adjusting screws are not resting on the work surface (Figure 8).
3. Rotate the reel so that 1 of the blades crosses the bedknife edge between the first and second bedknife screw heads located on the right side of the cutting unit.
4. Make and identifying mark on the blade where it crosses the bedknife edge.

   **Note:** Doing this will make later adjustments easier.
5. Insert a 0.05 mm (0.002 inch) shim between the blade and the bedknife edge at the point marked in step 4.
6. Turn the right bedbar adjusting screw (Figure 9) until you feel light pressure on the shim when sliding it side-to-side. Remove the shim.
7. For the left side of the cutting unit, slowly rotate the reel so that the closest blade crosses the bedknife edge between the first and second screw heads.
8. Repeat steps 4 through 6 for the left side of the cutting unit and left bedbar adjusting screw.
9. Repeat steps 5 and 6 until there is light pressure at the contact points on both the left and right sides of the cutting unit.
10. To obtain light contact between the reel and bedknife, turn each bedbar adjusting screw clockwise 3 click.

    **Note:** Each click on the bedbar adjusting screw moves the bedknife 0.018 mm (0.0007 inches). **Do not overtighten the adjusting screws.**

    Turning the adjusting screw clockwise moves the bedknife edge closer to the reel. Turning the adjusting screw counterclockwise moves the bedknife edge away from the reel.
11. Test the cutting performance by inserting a long strip of cutting performance paper between the reel and bedknife, perpendicular to the reel and bedknife (Figure 10). Slowly rotate the reel forward to cut the paper.

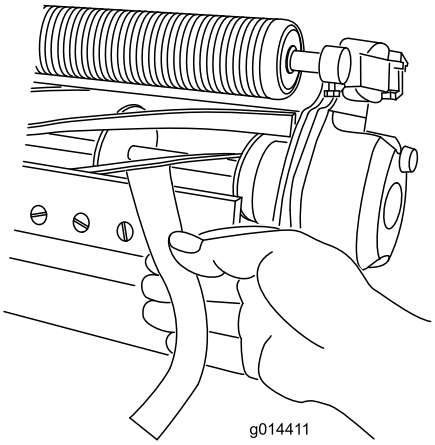


g014411

**Figure 10**

**Note:** If excessive contact/reel drag is evident, you may need to backlap or grind the reel and bedknife to achieve the sharp edges needed for precision cutting.

# Grinding the Bedknife

## Relief-Grinding the Reel

The new reel has a land width of 0.76 to 1.27 mm (0.030 to 0.050 inch) and a 30 degree relief grind.

When the land width gets larger than 3 mm (0.120 inch) wide, do the following:

1. Apply a 30 degree relief grind on all reel blades until the land width is 0.76 to 1.27 mm (0.030 to 0.050 inch) wide (Figure 11.

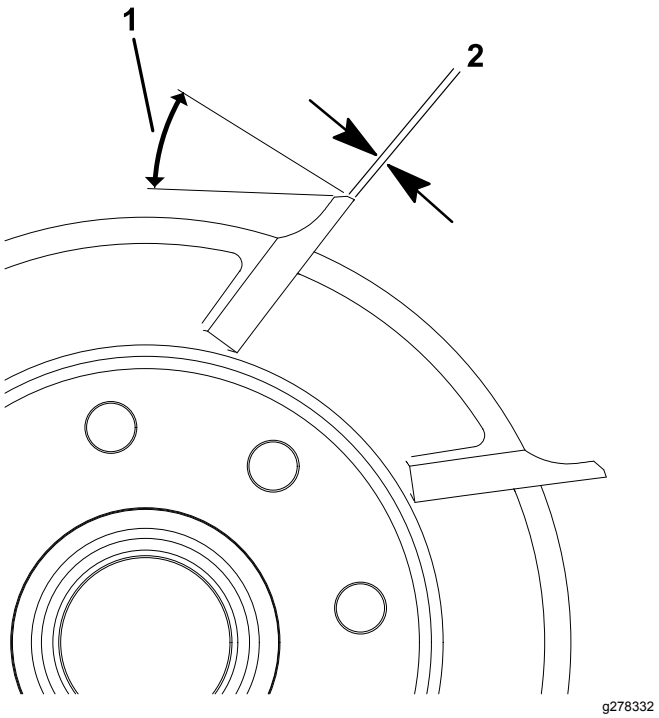


**Figure 11**

1. 30 degrees
2. 1.3 mm (0.050 inch)

2. Spin grind the reel to achieve <0.025 mm (0.001 inch) reel run-out.

   **Note:** This causes the land width to grow slightly.

**Note:** To extend the longevity of the sharpness of the edge of the reel and the bedknife—after grinding the reel and/or the bedknife—check the reel to bedknife contact again after cutting 6 greens, as any burrs will be removed, which may create improper reel to bedknife clearance and thus accelerate wear.

## Checking the Top Grind Angle

The angle that you use to grind your bedknives is very important.

Use the angle indicator and the angle-indicator mount to check the angle that your grinder produces and then correct for any grinder inaccuracy.

1. Place the angle indicator on the bottom side of the bedknife as shown in Figure 12.

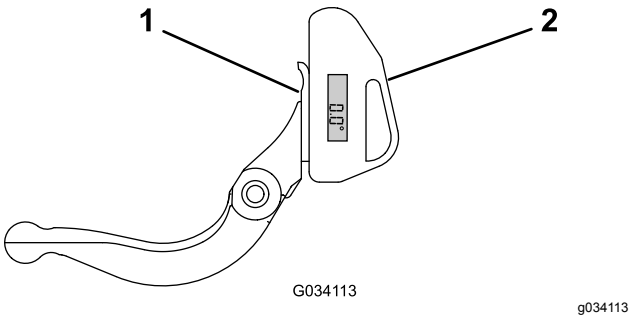


**Figure 12**

1. Bedknife (vertical)
2. Angle indicator

2. Press the Alt Zero button on the angle indicator.
3. Place the angle-indicator mount on the edge of the bedknife so that the edge of the magnet mates with the edge of the bedknife (Figure 13).

   **Note:** The digital display should be visible from the same side during this step as it was in step 1.

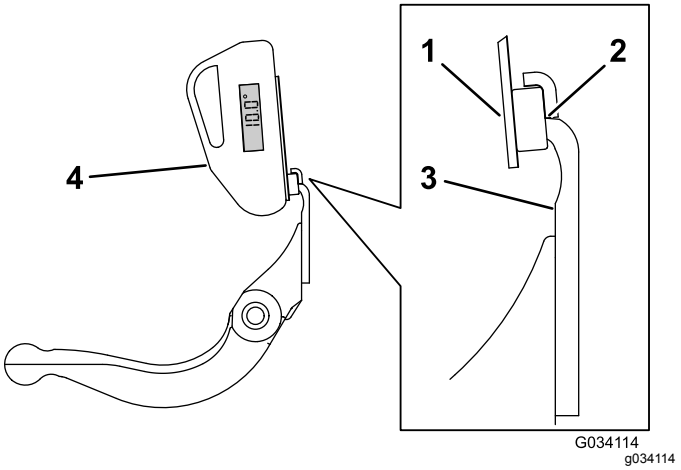


**Figure 13**

1. Angle-indicator mount
2. Edge of the magnet mated with the edge of the bedknife
3. Bedknife
4. Angle indicator

4. Place the angle indicator on the mount as shown in Figure 13.

   **Note:** This is the angle that your grinder produces, and should be within 2 degrees of the recommended top grind angle.

## Reel Grinding Specifications

| | |
|---|---|
| Reel Diameter (New) | 128.5 mm (5.06 inches) |
| Service Limit–Reel Diameter | 114.3 mm (4.50 inches) |
| Reel Shaft Diameter (OD) | 34.9 mm (1.375 inches) |
| Blade Relief Angle | 25 to 35° |
| Blade Land Width | 0.76 to 1.27 mm (0.030 to 0.50 inch) |

| | |
|---|---|
| Blade Land Width Range | 0.8 to 1.2 mm (0.030 to 0.050 inch) |
| Service Limit–Reel Diameter Taper | 0.25 mm (0.010 inch) |

# Adjusting the Rear Roller Height

Depending on your desired height-of-cut range, adjust the rear roller brackets (Figure 14 or Figure 15) to the low or high position:

- Position the spacer above the sideplate-mounting flange (factory setting) when the height-of-cut settings range from 1.5 mm to 6 mm (1/16 inch to 1/4 inch) as shown in Figure 14.

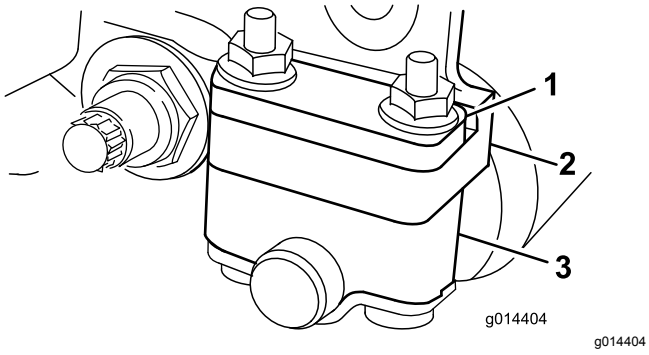


g014404

**Figure 14**

1. Spacer
2. Sideplate-mounting flange
3. Roller bracket

- Position the spacer below the sideplate-mounting flange when the height-of-cut settings range from 3 mm to 25 mm (1/8 inch to 1 inch) as shown inFigure 15.

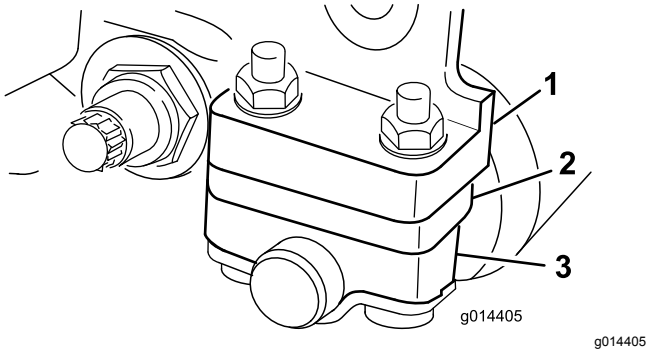


g014405

**Figure 15**

1. Sideplate-mounting flange
2. Spacer
3. Roller bracket

1. Raise the rear of the cutting unit and place a block under the bedknife.
2. Remove the 2 nuts securing each roller bracket and spacer to each sideplate mounting flange.
3. Lower the roller and screws from the sideplate mounting flanges and spacers.
4. Place the spacers onto the screws above of below the roller brackets, as required (Figure 14 or Figure 15).
5. Secure the roller bracket and spacers to the underside of the mounting flanges with the nuts previously removed.
6. Verify that the bedknife-to-reel contact is correct. Tip the mower to expose the front and rear rollers and the bedknife.

   **Note:** The position of the rear roller to the reel is controlled by the machining tolerances of the assembled components and paralleling is not required. A limited amount of adjustment is possible by setting the cutting unit on a surface plate and loosening the sideplate mounting bolts (Figure 16). Adjust and tighten the bolts when finished.

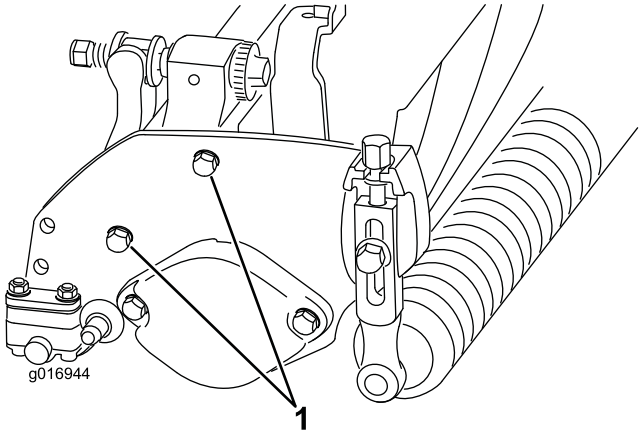


g016944

**Figure 16**

1. Sideplate-mounting bolts

***Important:*** **Whenever you must tip the cutting unit to expose the bedknife/reel, prop up the rear of the cutting unit to ensure that the nuts on the back end of the bedbar adjusting screws are not resting on the work surface (Figure 8).**

# Adjusting the Height of Cut

This cutting unit comes standard with the Edgemax Micro-cut bedknife and standard bedbar. The effective height of cut depends on previous mower configurations and turf conditions (i.e., roller type, bedknife behind center distance, soft or firm greens, season conditions). Set the initial height of cut 0.25 mm to 0.38 mm (0.010 to 0.015 inch) higher than the previous greensmower setup and adjust it to match conditions.

**Note:** For heights of cut greater than 13 mm (0.500 inch), install the high-height-of-cut kit.

Use the following chart to determine which bedknife is best suited for the desired height of cut.

| Recommended Bedknife/Height of Cut Chart | | |
|---|---|---|
| **Bedknife** | **Part Number** | **Height of Cut** |
| Edgemax Micro-cut (Standard) | 115-1880 (2100)<br>117-1530 (1800) | 1.5 to 4.7 mm (0.062–0.188 inch) |
| Edgemax Tournament (Optional) | 115-1881 (2100)<br>117-1532 (1800) | 3.1 to 12.7 mm (0.125–0.500 inch) |
| Micro-cut (Optional) | 93-4262 (2100)<br>98-7261 (1800) | 1.5 to 4.7 mm (0.062–0.188 inch) |
| Tournament (Optional) | 93-4263 (2100)<br>98-7260 (1800) | 3.1 to 12.7 mm (0.125–0.500 inch) |
| Extended Micro-cut (Optional) | 108-4303 (2100)<br>110-2300 (1800) | 1.5 to 4.7 mm (0.062–0.188 inch) |
| Extended Tournament (Optional) | 108-4302 (2100) | 3.1 to 12.7 mm (0.125–0.500 inch) |
| Low-cut (Optional) | 93-4264 (2100)<br>110-2301 (1800) | 4.7 to 25.4 mm (0.188–1.00 inch) |

1. Loosen the locknuts securing the height-of-cut arms to the cutting-unit side plates (Figure 17).

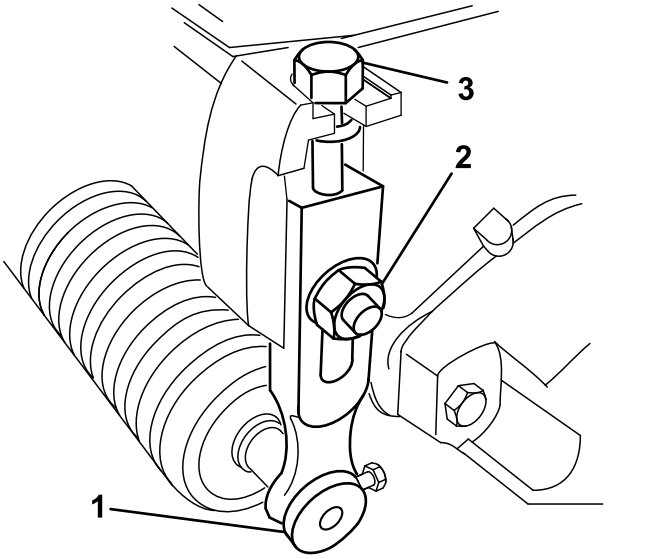


**Figure 17**

1. Height-of-cut arm
2. Flange locknut
3. Adjusting screw

2. Loosen the nut on the gauge bar and set the adjusting screw to the desired height of cut (Figure 18).

   **Note:** The distance between the bottom of the screw head and the face of bar is the height of cut.

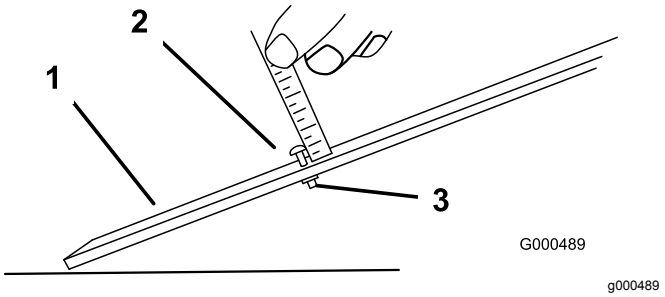


**Figure 18**

1. Gauge bar
2. Height-adjusting screw
3. Nut

3. Hook the screw head onto the cutting edge of the bedknife and rest the rear end of the bar onto the rear of the roller (Figure 19).

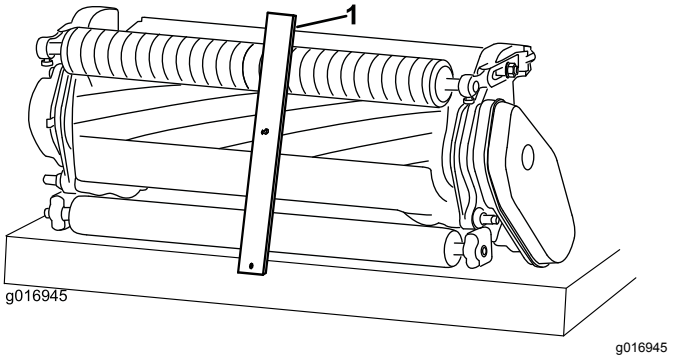


**Figure 19**

1. Gauge bar

4. Rotate the adjusting screw until the roller contacts the front of the gauge bar.
5. Adjust both ends of the roller until the entire roller is parallel to the bedknife.

   ***Important:*** **When set properly, the rear and front rollers contact the gauge bar and the screw is snug against the bedknife. This ensures that the height of cut is identical at both ends of the bedknife.**

6. Tighten the nuts to secure the adjustment enough to remove play from the washer.

# Adjusting the Clip Setting

There are 6 clip settings on the cutting unit that you can set to match your turf conditions. Start out setting the clip to match the height of cut, but then test the cutting unit and adjust the clip to obtain the quality of cut that you desire.

1. Shut off the machine as follows:
   - Gas units: Shut off the engine and disconnect the spark-plug wire.
   - Electric units: Turn off the machine and disconnect the battery connector (T-handle).
2. Loosen the flange bolt securing the belt cover and remove the belt cover to expose the belt (Figure 20).

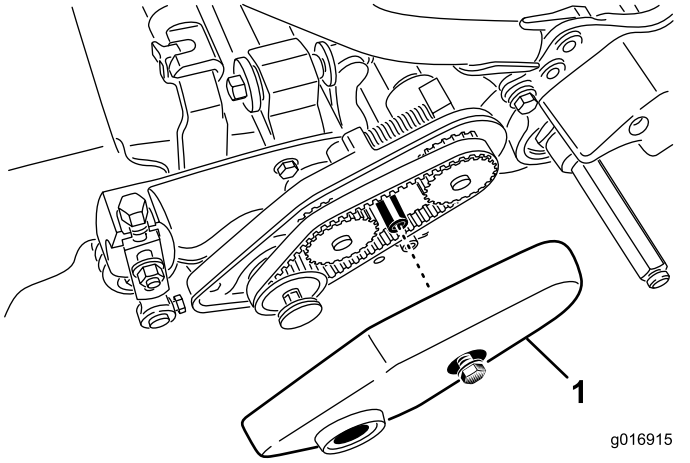


Figure 20

1. Belt cover

3. Loosen the bearing-housing nut (Figure 21).

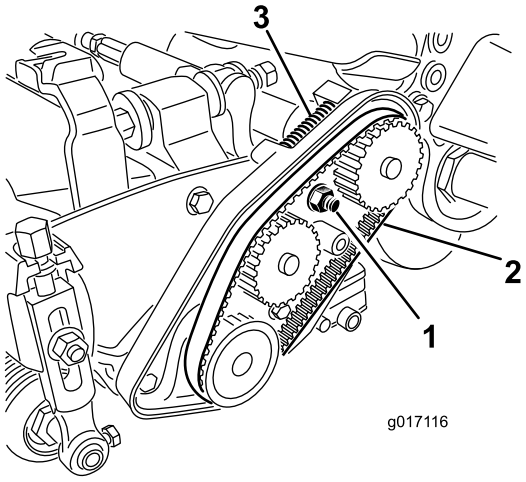


Figure 21

1. Bearing-housing nut
2. Reel drive belt
3. Compression spring

4. Using a 16 mm (5/8 inch) wrench, rotate the bearing housing to make sure it operates freely.
5. Remove the belt (Figure 21).
6. Using the chart shown on the decal in Figure 22, determine the clip setting you want and which pulleys you will need to move.

   **Note:** Each pulley is numbered (22, 24, and 25). Move the pulleys to the positions indicated in the chart for your clip setting.

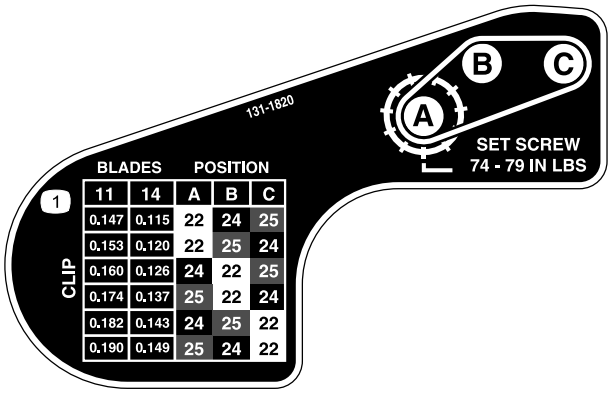


Figure 22

7. Loosen the 2 set screws on each pulley you need to move using a hex wrench.
8. Remove each pulley.
9. Install each pulley in the new configuration as indicated on the decal (Figure 22).

   **Note:** Ensure that the setscrews on each pulley are positioned to align with the key and flat area on the shaft.
10. Torque the setscrews to 8.3 to 8.9 N·m (74 to 79 in-lb).
11. Install the belt.
12. Ensure that the compression spring is applying tension to the belt (Figure 21).
13. Tighten the bearing-housing nut.
14. Install the belt cover.

# Adjusting the Cut-Off Bar

Adjust the cut-off bar to ensure that the clippings are cleanly discharged from the reel area, as follows:

**Note:** The bar is adjustable to compensate for changes in turf conditions. Adjust the bar closer to the reel when the turf is extremely dry. By contrast, adjust the bar further away from the reel when the turf conditions are wet. The bar should be parallel to the reel to ensure optimum performance. Adjust it after sharpening the reel on a reel grinder.

1. Loosen the screws securing the top bar (Figure 23) to the cutting unit.

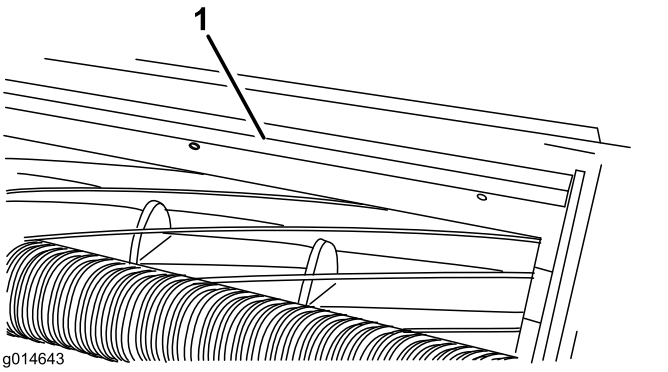


Figure 23

1. Cut-off bar

2. Insert a 1.5 mm (0.060 inch) feeler gauge between the top of the reel and the bar and tighten the screws.

   ***Important:*** **Ensure that the bar and reel are equal distance apart across the complete reel.**

# Servicing the Bedbar/Bedknife

Only a properly trained mechanic should service the bedbar and bedknife to prevent damage to the reel, bedbar, or bedknife. Take the cutting unit to your authorized Toro distributor for service. Refer to the *Service Manual* for your traction unit for complete instructions, special tools, and diagrams for servicing the bedknife. Should you need to remove or assemble the bedbar yourself, the instructions and specifications for servicing the bedknife are provided below.

***Important:*** **Always follow the bedknife procedures detailed in your *Service Manual* when servicing the bedknife. Failure to install and grind the bed knife correctly can damage to the reel, bedbar, or bedknife.**

## Removing the Bedbar

1. Turn the bedbar adjusting screw counterclockwise to back the bedknife away from the reel (Figure 24).

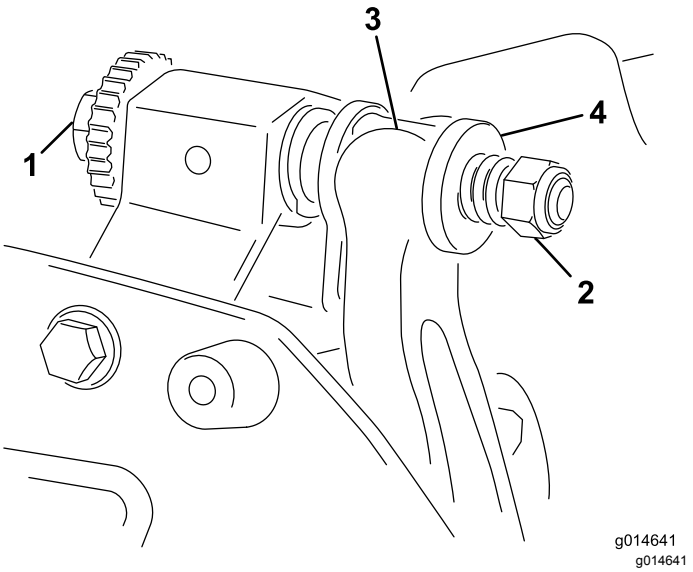


Figure 24

1. Bedbar-adjusting screw
2. Spring-tension nut
3. Bedbar
4. Washer

2. Back out the spring-tension nut until the washer is no longer tensioned against the bedbar (Figure 24).
3. On each side of the machine, loosen the locknut securing the bedbar bolt (Figure 25).

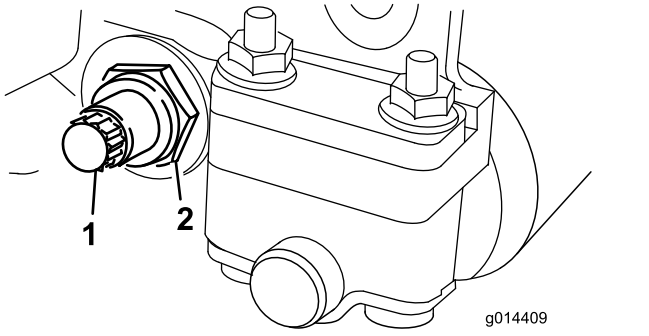


**Figure 25**

1. Bedbar bolt
2. Locknut

4. Remove each bedbar bolt, allowing you to pull down the bedbar, and remove it from the machine bolt (Figure 25).

   Account for the 2 nylon and 2 stamped steel washers on each end of the bedbar (Figure 26).

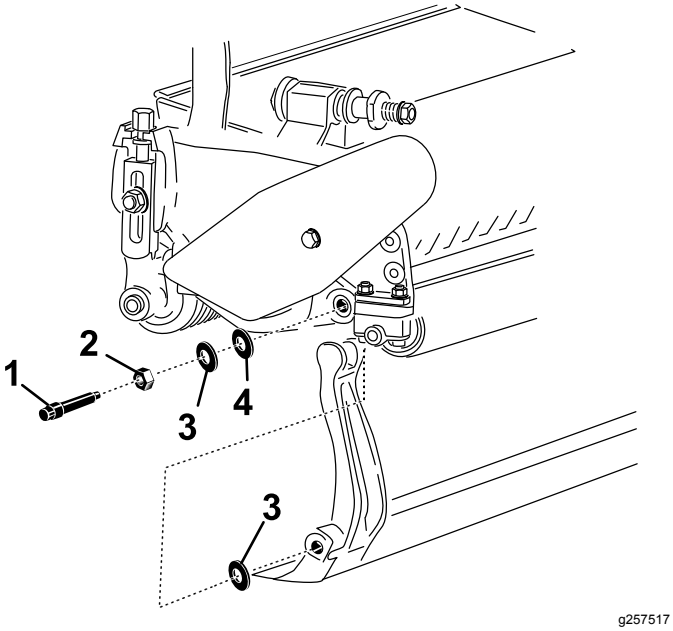


**Figure 26**

1. Bedbar bolt
2. Nut
3. Steel washer
4. Nylon washer

## Assembling the Bedbar

1. Install the bedbar, positioning the mounting ears between the washer and bedbar adjuster.
2. Secure the bedbar to each side plate with the bedbar bolts (nuts on bolts) and 4 washers (8 total).
3. Position a nylon washer on each side of the side-plate boss. Place a steel washer outside each of the nylon washers (Figure 26).
4. Torque the bedbar bolts to 27 to 36 N·m (240 to 320 inch-lb). Tighten the locknuts by hand until the outside steel washer stops rotating and there is no end play. The washers on the inside may have a gap.

   ***Important:*** **Do not overtighten the locknuts or they will deflect the side plates.**

5. Tighten the spring tension nut until the spring collapses, then back it off 1/2 turn (Figure 27).

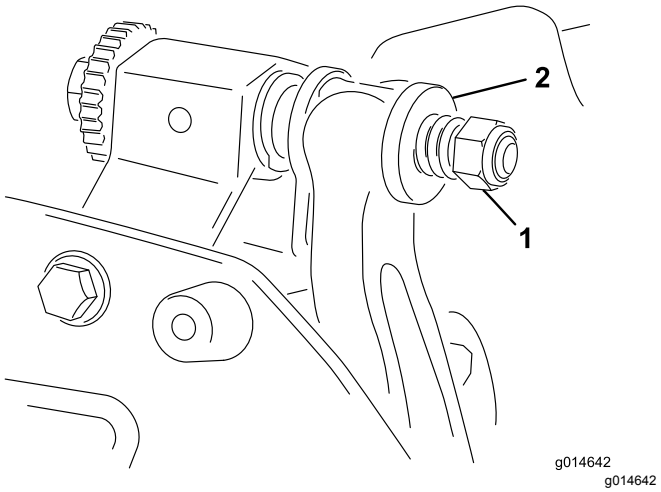


**Figure 27**

1. Spring-tension nut
2. Spring

## Installing the Bedknife

1. Remove the rust, scale, and corrosion from the bedbar surface and apply a thin layer of oil to the bedbar surface.
2. Clean the screw threads.
3. Apply never-seize compound to the screws and install the bedknife to the bedbar.

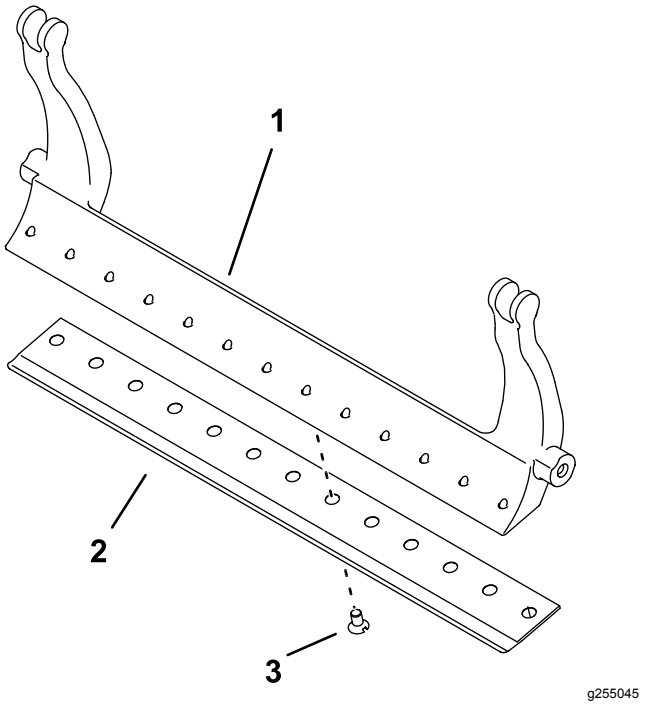


**Figure 28**

1. Bedbar
2. Bedknife
3. Screw

4. Torque the 2 outer screws to 1 N·m (10 in-lb).
5. Working form the center of the bedknife, torque the screws to 23 to 28 N·m (200 to 250 in-lb).

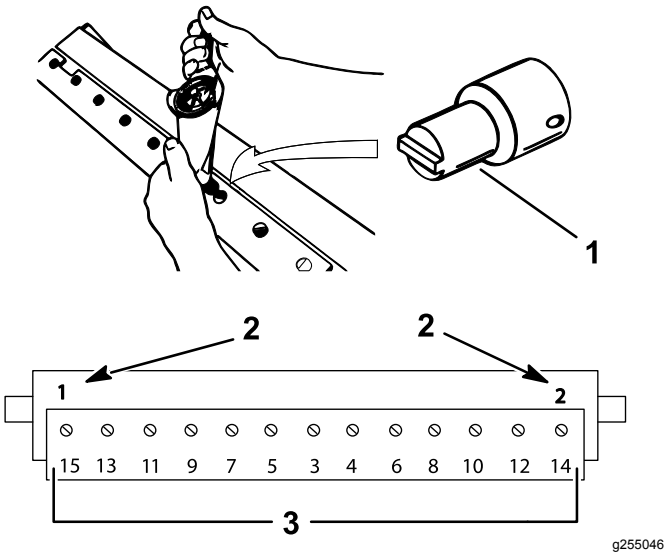


**Figure 29**

1. Bednife screw tool
2. Install and torque these first to 1 N·m (10 in-lb).
3. Torque to 23 to 28 N·m (200 to 250 in-lb).

6. Grind the bedknife.

# Bedknife Specifications

## Bedknife Grinding Specifications

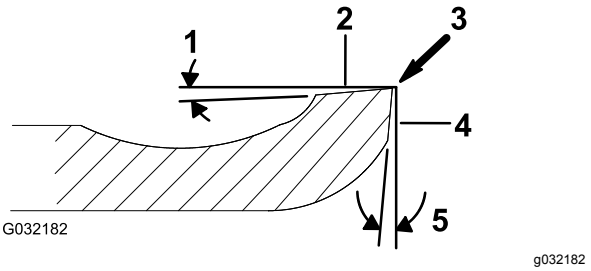


**Figure 30**

1. Relief angle
2. Top face
3. Remove burr
4. Front face
5. Front angle

| | |
|---|---|
| Standard bedknife relief angle | 3° Minimum |
| Extended bedknife relief angle | 7° Minimum |
| Front angle range | 13° to 17° |

# Backlapping the Reel

**⚠ DANGER**

**Contact with the reel or other moving parts can result in personal injury.**

**Keep your fingers, hands, and clothing away from the reels or other moving parts.**

- **Stay away from the reel while backlapping.**
- **Never use a short-handled paint brush for backlapping. For handle assembly parts, contact your authorized Toro distributor.**

You can backlap the reels either by leaving the cutting unit on the traction unit or removing the cutting unit completely from the traction unit. If you leave the cutting unit on the traction unit, move the hex coupler between the main drive and cutting unit drive to the decoupled position to prevent excessive wear to the reel brake.

1. Position the machine on a clean, level surface.
2. Shut off the machine as follows:
   - Gasoline units: Shut off the engine and disconnect the spark-plug wire.
   - Electric units: Turn off the machine and disconnect the battery connector (T-handle).
3. Engage the parking brake.
4. Connect the backlapping machine to the cutting unit by connecting a 1/2-inch hex socket to the reel pulley output shaft on the left side of the cutting unit.

   **Note:** Additional instructions and procedures on backlapping are available in the *Toro Sharpening Reel and Rotary Mowers Manual* (Form No. 80-300PT).

   **Note:** For a better cutting edge, run a file across the front face of the bedknife when you complete the lapping operation. This removes any burrs or rough edges that may have built up on the cutting edge. A very light file touch may be necessary on the top edge to break the burr off completely from the cutting edge.

   **Note:** If you leave the cutting unit attached to the machine during backlapping, couple the hex shaft of the machine back to the cutting unit.

# Declaration of Incorporation

The Toro Company, 8111 Lyndale Ave. South, Bloomington, MN, USA declares that the following unit(s) conform(s) to the directives listed, when installed in accordance with the accompanying instructions onto certain Toro models as indicated on the relevant Declarations of Conformity.

| Model No. | Serial No. | Product Description | Invoice Description | General Description | Directive |
|---|---|---|---|---|---|
| 04289 | 403460001 and Up | 18-inch 11-Blade Cutting Unit, Greensmaster Flex/eFlex 1820 Traction Unit | FLEX 11 BLADE 18 INCH CUTTING UNIT | Lawn Mower | 2006/42/EC |
| 04290 | 403460001 and Up | 21-inch 11-Blade Cutting Unit, Greensmaster Flex/eFlex 2120 Traction Unit | FLEX 11 BLADE 21 INCH DPA CUTTING UNIT | Lawn Mower | 2006/42/EC |
| 04291 | 403460001 and Up | 18-inch 14-Blade Cutting Unit, Greensmaster Flex/eFlex 1820 Traction Unit | FLEX 14 BLADE 18 INCH CUTTING UNIT | Lawn Mower | 2006/42/EC |
| 04292 | 403460001 and Up | 21-inch 14-Blade Cutting Unit, Greensmaster Flex/eFlex 2120 Traction Unit | FLEX 14 BLADE 21 INCH CUTTING UNIT | Lawn Mower | 2006/42/EC |

Relevant technical documentation has been compiled as required per Part B of Annex VII of 2006/42/EC.

We will undertake to transmit, in response to requests by national authorities, relevant information on this partly completed machinery. The method of transmission shall be electronic transmittal.

This machinery shall not be put into service until incorporated into approved Toro models as indicated on the associated Declaration of Conformity and in accordance with all instructions, whereby it can be declared in conformity with all relevant Directives.

Certified:



John Heckel
Sr. Engineering Manager
8111 Lyndale Ave. South
Bloomington, MN 55420, USA
December 11, 2018

Authorized Representative:

Marcel Dutrieux
Manager European Product Integrity
Toro Europe NV
Nijverheidsstraat 5
2260 Oevel
Belgium

Tel. +32 16 386 659

# EEA/UK Privacy Notice

**Toro's Use of Your Personal Information**

The Toro Company ("Toro") respects your privacy. When you purchase our products, we may collect certain personal information about you, either directly from you or through your local Toro company or dealer. Toro uses this information to fulfil contractual obligations - such as to register your warranty, process your warranty claim or to contact you in the event of a product recall - and for legitimate business purposes - such as to gauge customer satisfaction, improve our products or provide you with product information which may be of interest. Toro may share your information with our subsidiaries, affiliates, dealers or other business partners in connection these activities. We may also disclose personal information when required by law or in connection with the sale, purchase or merger of a business. We will never sell your personal information to any other company for marketing purposes.

**Retention of your Personal Information**

Toro will keep your personal information as long as it is relevant for the above purposes and in accordance with legal requirements. For more information about applicable retention periods please contact legal@toro.com.

**Toro's Commitment to Security**

Your personal information may be processed in the US or another country which may have less strict data protection laws than your country of residence. Whenever we transfer your information outside of your country of residence, we will take legally required steps to ensure that appropriate safeguards are in place to protect your information and to make sure it is treated securely.

**Access and Correction**

You may have the right to correct or review your personal data, or object to or restrict the processing of your data. To do so, please contact us by email at legal@toro.com. If you have concerns about the way in which Toro has handled your information, we encourage you to raise this directly with us. Please note that European residents have the right to complain to your Data Protection Authority.

# The Toro Warranty

Two-Year or 1,500 Hours Limited Warranty

## Conditions and Products Covered

The Toro Company and its affiliate, Toro Warranty Company, pursuant to an agreement between them, jointly warrant your Toro Commercial product (“Product”) to be free from defects in materials or workmanship for 2 years or 1,500 operational hours*, whichever occurs first. This warranty is applicable to all products with the exception of Aerators (refer to separate warranty statements for these products). Where a warrantable condition exists, we will repair the Product at no cost to you including diagnostics, labor, parts, and transportation. This warranty begins on the date the Product is delivered to the original retail purchaser.
* Product equipped with an hour meter.

## Instructions for Obtaining Warranty Service

You are responsible for notifying the Commercial Products Distributor or Authorized Commercial Products Dealer from whom you purchased the Product as soon as you believe a warrantable condition exists. If you need help locating a Commercial Products Distributor or Authorized Dealer, or if you have questions regarding your warranty rights or responsibilities, you may contact us at:

Toro Commercial Products Service Department
Toro Warranty Company
8111 Lyndale Avenue South
Bloomington, MN 55420-1196

952–888–8801 or 800–952–2740
E-mail: commercial.warranty@toro.com

## Owner Responsibilities

As the product owner, you are responsible for required maintenance and adjustments stated in your *Operator's Manual*. Repairs for product issues caused by failure to perform required maintenance and adjustments are not covered under this warranty.

## Items and Conditions Not Covered

Not all product failures or malfunctions that occur during the warranty period are defects in materials or workmanship. This warranty does not cover the following:

- Product failures which result from the use of non-Toro replacement parts, or from installation and use of add-on, or modified non-Toro branded accessories and products.
- Product failures which result from failure to perform recommended maintenance and/or adjustments.
- Product failures which result from operating the Product in an abusive, negligent, or reckless manner.
- Parts consumed through use that are not defective. Examples of parts which are consumed, or used up, during normal Product operation include, but are not limited to, brake pads and linings, clutch linings, blades, reels, rollers and bearings (sealed or greasable), bed knives, spark plugs, castor wheels and bearings, tires, filters, belts, and certain sprayer components such as diaphragms, nozzles, and check valves.
- Failures caused by outside influence, including, but not limited to, weather, storage practices, contamination, use of unapproved fuels, coolants, lubricants, additives, fertilizers, water, or chemicals.
- Failure or performance issues due to the use of fuels (e.g. gasoline, diesel, or biodiesel) that do not conform to their respective industry standards.
- Normal noise, vibration, wear and tear, and deterioration. Normal “wear and tear” includes, but is not limited to, damage to seats due to wear or abrasion, worn painted surfaces, scratched decals or windows.

## Parts

Parts scheduled for replacement as required maintenance are warranted for the period of time up to the scheduled replacement time for that part. Parts replaced under this warranty are covered for the duration of the original product warranty and become the property of Toro. Toro will make the final decision whether to repair any existing part or assembly or replace it. Toro may use remanufactured parts for warranty repairs.

## Deep Cycle and Lithium-Ion Battery Warranty

Deep cycle and Lithium-Ion batteries have a specified total number of kilowatt-hours they can deliver during their lifetime. Operating, recharging, and maintenance techniques can extend or reduce total battery life. As the batteries in this product are consumed, the amount of useful work between charging intervals will slowly decrease until the battery is completely worn out. Replacement of worn out batteries, due to normal consumption, is the responsibility of the product owner. Note: (Lithium-Ion battery only): Pro-rated after 2 years. Refer to the battery warranty for additional information.

## Maintenance is at Owner’s Expense

Engine tune-up, lubrication, cleaning and polishing, replacement of filters, coolant, and completing recommended maintenance are some of the normal services Toro products require that are at the owner’s expense.

## General Conditions

Repair by an Authorized Toro Distributor or Dealer is your sole remedy under this warranty.

**Neither The Toro Company nor Toro Warranty Company is liable for indirect, incidental or consequential damages in connection with the use of the Toro Products covered by this warranty, including any cost or expense of providing substitute equipment or service during reasonable periods of malfunction or non-use pending completion of repairs under this warranty. Except for the Emissions warranty referenced below, if applicable, there is no other express warranty. All implied warranties of merchantability and fitness for use are limited to the duration of this express warranty.**

Some states do not allow exclusions of incidental or consequential damages, or limitations on how long an implied warranty lasts, so the above exclusions and limitations may not apply to you. This warranty gives you specific legal rights, and you may also have other rights which vary from state to state.

## Note Regarding Emissions Warranty

The Emissions Control System on your Product may be covered by a separate warranty meeting requirements established by the U.S. Environmental Protection Agency (EPA) and/or the California Air Resources Board (CARB). The hour limitations set forth above do not apply to the Emissions Control System Warranty. Refer to the Engine Emission Control Warranty Statement supplied with your product or contained in the engine manufacturer’s documentation.

## Countries Other than the United States or Canada

Customers who have purchased Toro products exported from the United States or Canada should contact their Toro Distributor (Dealer) to obtain guarantee policies for your country, province, or state. If for any reason you are dissatisfied with your Distributor's service or have difficulty obtaining guarantee information, contact your Authorized Toro Service Center.