FORM NO. 3322-688

TORO®

52” Pulley Kit

For Z–Master™ Series

Part No. 100–2317

INSTALLATION INSTRUCTIONS

Loose Parts

Note: Use the chart below to identify parts for assembly.

DESCRIPTION	QTY.	USE
Pulley Assembly	1	Install Pulleys
Belt	1	
Idler Arm	1	Install Idler Arm
Flat Washers	2	

Removing Belts

1. Stop the engine, set the parking brake, remove the key and disconnect the spark plug wire(s) from the spark plug(s).
2. Remove the clutch retaining strap from machine frame and unplug clutch terminal from wire harness (Fig. 4).
3. Remove the PTO drive belt (Fig. 4).
4. Loosen idler pulley on deck belt. Remove deck belt from center spindle pulley.

Installing Pulleys

Note: Clean area around pulley before removing pulley assembly. Hold spindle up from underneath deck. It can fall when nut and washer are removed.

1. Remove nut and washer on top of center spindle (Fig. 1). Save the nut and washer.
2. Remove existing pulley assembly (Fig. 1).
3. Install new pulley assembly. Install it so the large pulley is on top (Fig. 1).
4. Reinstall washer and nut. Torque nut to 115 ft–lbs (156 N•m) (Fig. 1).

©The Toro Company – 1999
All Rights Reserved

Printed in USA

5. Grease spindle.

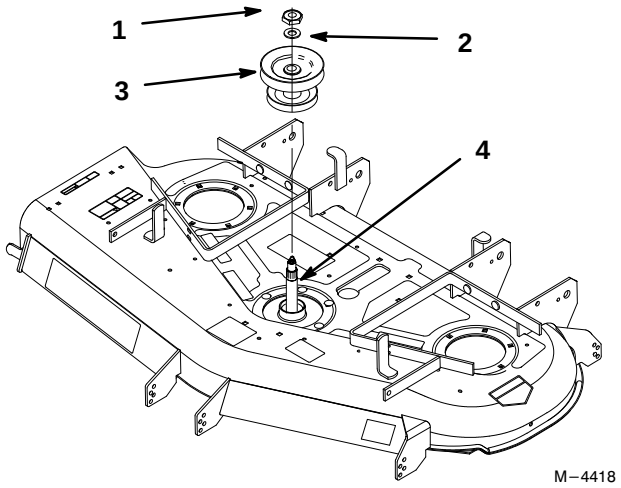

Figure 1

1. Nut.
2. Washer
3. Pulley Assembly
4. Spindle

Removing Old Drive Belt Idler Arm

1. Remove the spring from the old idler arm (Old idler arm not shown) (Fig. 3).

2. Remove the old idler arm from the machine frame (Old idler arm not shown) (Fig. 3).

3. Remove the spring from the machine frame. Discard old washer (Fig. 3).

4. Remove the pulley, bushing, and hardware from idler arm. (Old idler arm not shown) (Fig. 2).

Installing New Drive Belt Idler Arm

1. Route new belt onto the idler pulley. Install pulley and belt to new idler arm using existing hardware (Fig. 2).

2. Install spring to new idler arm. Use existing hardware and new flat washer included in kit. (Fig. 2).

Note: New flat washer must be installed between spring and heat of bolt.

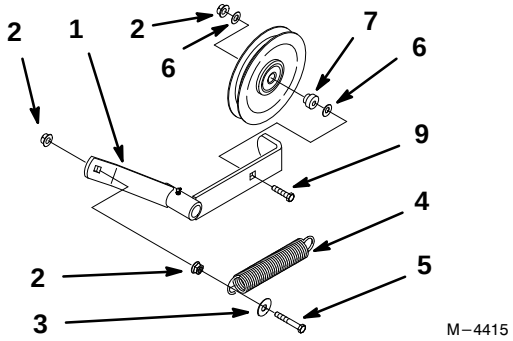

Figure 2

1. New Idler Arm
2. Lock Nut
3. New Flat Washer
4. Spring
5. Bolt (3/8”–16 x 2–1/4”)
6. Flat Washer
7. Bushing
8. Idler Pulley
9. Bolt (3/8”–16 x 1–3/4”)

3. Install new idler arm assembly to machine frame. Use existing hardware to attach it (Fig. 3).

4. Install spring to machine frame. Use existing hardware and new flat washer included in kit. (Fig. 3).

Note: New flat washer must be installed between spring and heat of bolt. The spring must be installed between new flat washer and spacer (Fig. 3).

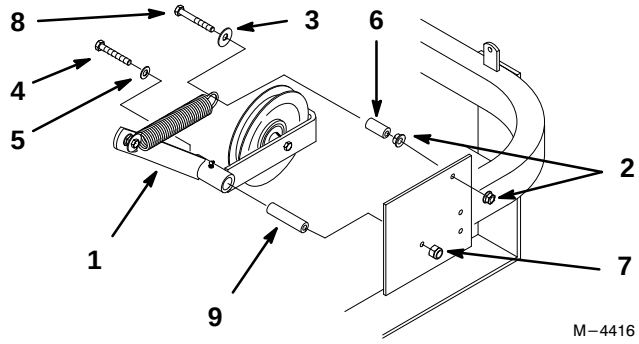

Figure 3

1. Idler Arm
2. Lock Nut
3. New Flat Washer
4. Bolt (3/8”–16 x 3–1/2”)
5. Flat Washer
6. Spacer
7. Nylon Locknut
8. Bolt (3/8”–16 x 2–1/4”)
9. Bushing

Installing belts

1. Place deck belt onto new pulley assembly. Route belt onto outer pulleys and idler pulley.

2. Place new PTO drive belt over clutch, around rear idler pulley, installed into idler arm assembly and onto mower top center pulley.

Note: Check that belt has only 1/4 twist between each pulley and idler.

3. Install clutch retaining strap and plug clutch terminal into main wire harness (Fig. 4).

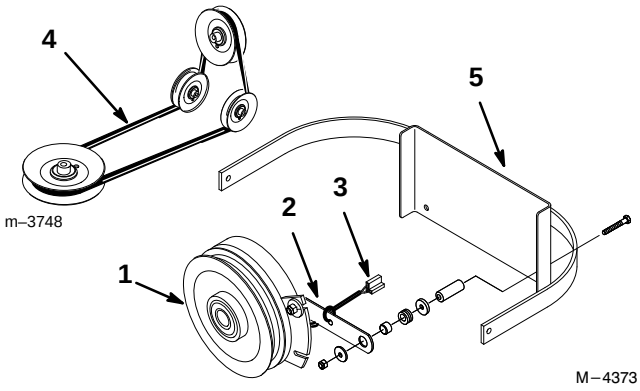

Figure 4

1. Clutch
2. Clutch retaining strap
3. Clutch Terminal
4. PTO belt
5. Machine Frame

4. Check belt tension. The center bolt of spring loaded idler must be between the two alignment holes in left support plate (Fig 5).

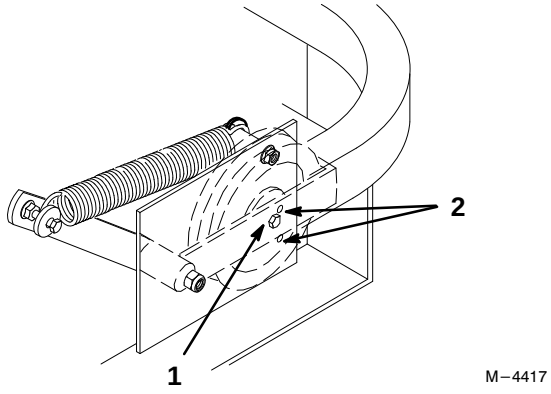

Figure 5

1. Center bolt, spring loaded idler
2. Alignment hole

5. If adjustment is required, loosen the fixed idler on right support plate and move up or down in adjustment slot. To relieve belt tension lift up on spring loaded idler (Fig. 6).

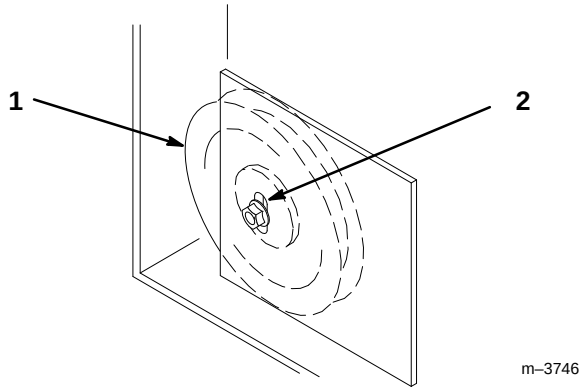

Figure 6

1. Fixed Idler
2. Adjustment slot

6. Check belt tension again. The center bolt of spring loaded idler must be between the two alignment holes in left support plate (Fig 5). Adjust, if necessary, and tighten all hardware securely.

7. If the fixed idler contacts the end of the adjustment slot and more belt tension is required, a small change in the length of the push arms can be made (Fig. 7).

8. To adjust push arms, remove PTO drive belt, loosen jam nut and rotate ball joint counterclockwise, one turn at a time. Adjust each side the same amount (Fig. 7).

Note: Increase tension by lengthening the push arms and decrease tension by shortening push arms.

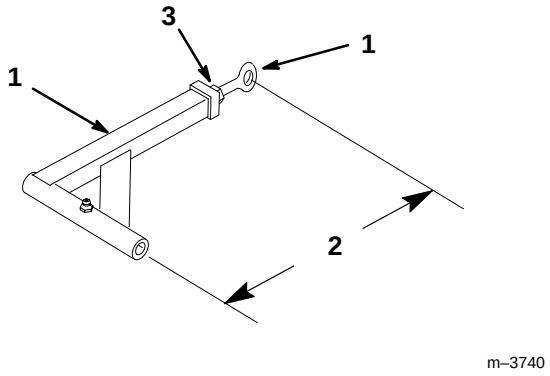

Figure 7

1. Push arm
2. 15” (381 mm) nominal
3. Jam nut
4. Ball joint

Adjusting Belt Guides

1. Loosen belt guide (Fig. 8).

2. Rotate the belt guide, on rear of the mower, so it is 1/8”–1/4” (3–7 mm) away from the vertical side of the PTO belt (Fig. 8).

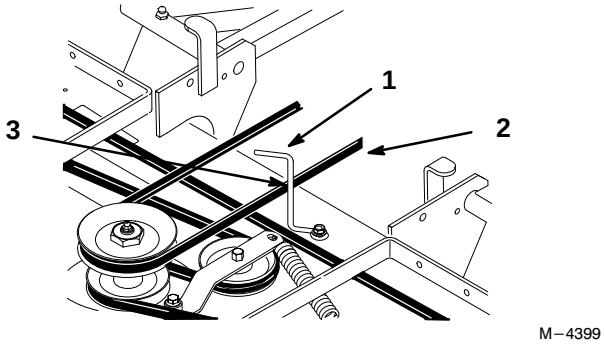

Figure 8

1. Belt guide
2. PTO Drive belt
3. 1/8”–1/4” (3–7 mm)