FORM NO. 3322–689

TORO®

PART NO. 100–2317

PARTS CATALOG

# 52” PULLEY KIT

**For Z–Master™ Series**

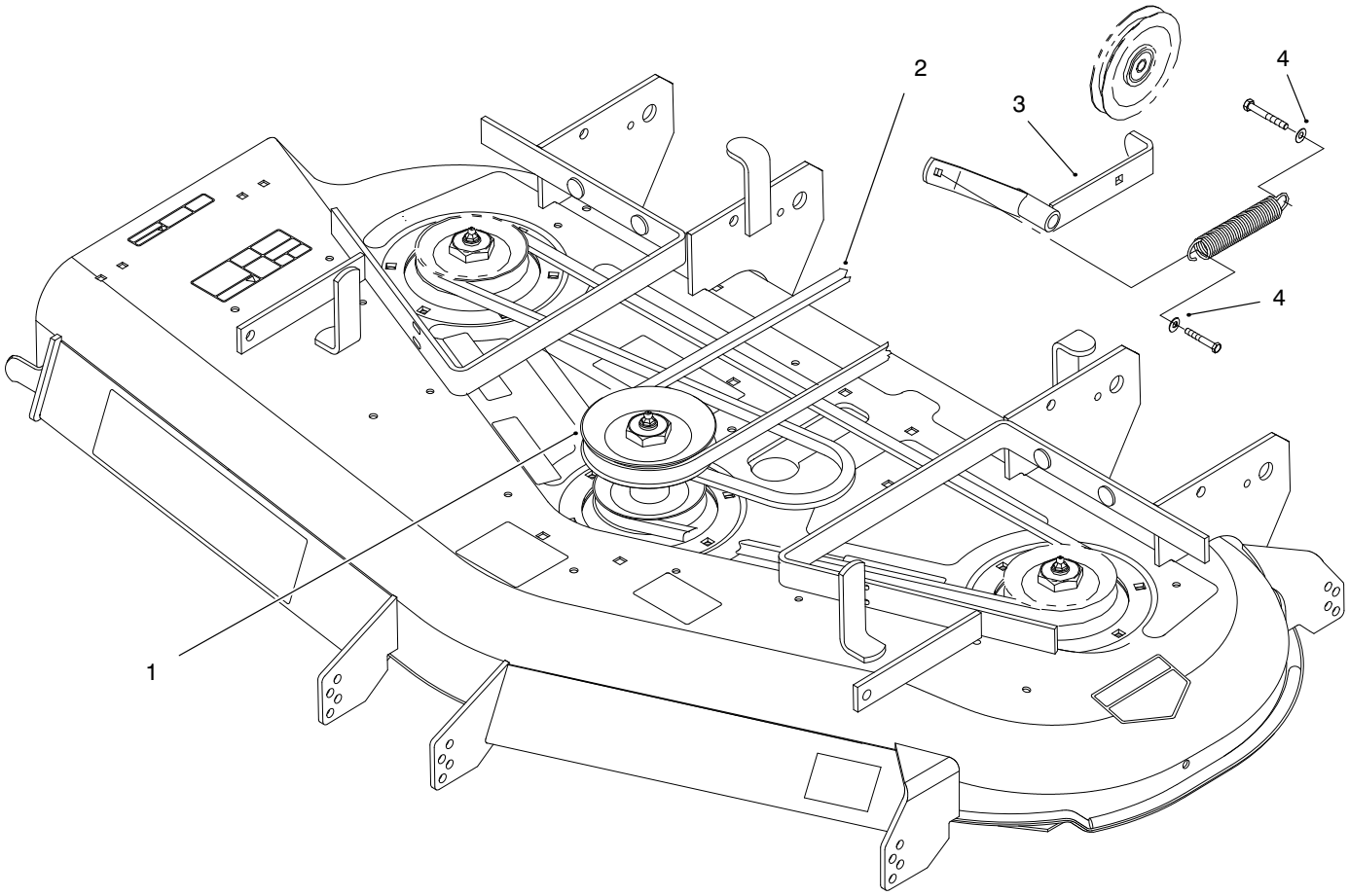


C–2822

## 52” PULLEY ASSEMBLY

PROTOTYPE

| Ref. No. | Part No. | Description | No. Used |
|---|---|---|---|
| 1 | 100–2312 | Pulley And Hub | 1 |
| 2 | 100–2314 | Belt | 1 |
| 3 | 99–4677 | Arm ASM (w/Bushings) | 1 |
| 4 | 3256–4 | Washer–Flat | 2 |

©The TORO Company – 1999
*All Rights Reserved*