Form No. 3429-505 Rev A

62in Blower Kit

Groundsmaster® 200/3280-D/3320 Series Side Discharge Mowers

Model No. 30506—Serial No. 403000001 and Up

Operator's Manual

This product complies with all relevant European directives. For details, please see the Declaration of Incorporation (DOI) at the back of this publication.

⚠ WARNING

CALIFORNIA
Proposition 65 Warning

Use of this product may cause exposure to chemicals known to the State of California to cause cancer, birth defects, or other reproductive harm.

Safety

Safety and Instructional Decals

Safety decals and instructions are easily visible to the operator and are located near any area of potential danger. Replace any decal that is damaged or missing.

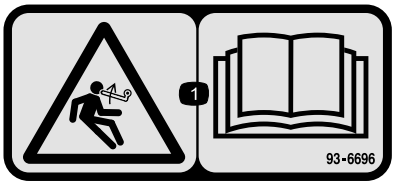

decal93-6696

93–6696

1. Stored energy hazard—read the *Operator's Manual*.



decal93-7301

93–7301

1. Warning-read the *Operator's Manual.*
2. Thrown object hazard-stay away from moving parts; keep all guards and shields in place.

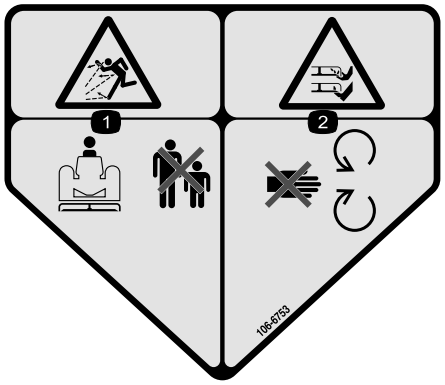

decal106-6753

106-6753

1. Thrown object hazard—keep bystanders away.
2. Cutting/dismemberment hazard of hand or foot, mower blade—stay away from moving parts.

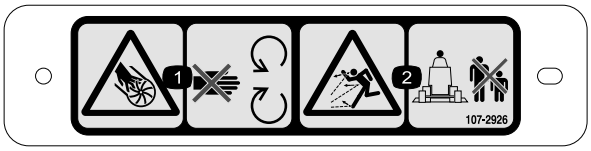

decal107-2926

107-2926

1. Cutting/dismemberment hazard of hand, impeller—stay away from moving parts.
2. Thrown object hazard—keep bystanders away.



decal133-8061

133-8061

© 2018—The Toro® Company
8111 Lyndale Avenue South
Bloomington, MN 55420

Register at www.Toro.com.

CE

Original Instructions (EN)
Printed in the USA
All Rights Reserved

3429-505 A

Setup

Loose Parts

Use the chart below to verify that all parts have been shipped.

Procedure	Description	Qty.	Use
1	No parts required	–	Remove the cutting unit from traction unit.
2	Double pulley Pulley nut Nut cover	1 1 1	Install the new spindle pulley.
3	Blade	3	Install the new blades.
4	Pivot brackets	2	Remove and modify the grass deflector.
5	Blower assembly with mounting brackets Capscrew, 5/16 x 1 inch Locknut, 5/16 Carriage bolt, 3/8 inch x 3/4 inch Flange nut, 3/8 inch	1 3 4 4 3	Install the blower mounting brackets.
6	Front deflector Rear deflector Rear shelf Left shelf Right shelf Capscrew, 5/16 x 5/8 inch Locknut, 5/16 inch Capscrew, 3/8 x 1 inch Lockwasher, 3/8 inch Capscrew, 1/4 x 1 inch Capscrew, 1/4 x 3/4 inch Locknut, 1/4 inch	1 1 1 1 1 6 6 4 4 3 3 6	Install the deck deflectors.
7	Deflector stop Capscrew, 1/4 x 3/4 inch Locknut, 1/4 inch	1 2 2	Mount the new deflector stop.
8	Idler arm assembly Pivot screw Bushing Washer Locknut, 3/8 inch Spring Threaded rod Flange nut, 5/16 inch Spring bracket Capscrew, 1/4 x 1 inch Locknut, 1/4 inch	1 1 1 2 1 1 1 2 1 2 2	Mount the idler assembly.
9	Belt	1	Mount the blower.

Procedure	Description	Qty.	Use
10	Bumper Capscrew, 5/16 x 3 inch Locknut, 5/16 inch	1 4 4	Install bumper
11	Trim molding Deck cover	1 1	Install the new deck cover.
12	Belt guard Pulley guard	1 1	Install the new safety guards.
13	Counterbalance spring	1	Install the new counterbalance spring.
14	No parts required	–	Install the cutting unit to the traction unit.
15	Decal, danger	1	Install the new decal.
16	Chute assembly	1	Mount the blower housing chute.

Media and Additional Parts

Description	Qty.	Use
Installation instructions	1	Read before installation
Certificate of compliance	1	CE certification

1

Removing the Cutting Unit from the Traction Unit

No Parts Required

Procedure

1. Position the machine on a level surface, raise the cutting unit, engage the parking brake, ensure that the traction pedal is in the neutral position and the PTO lever in the OFF position, shut off the engine, and remove the key from the switch.

⚠ CAUTION

The counterbalance spring is in tension when the deck is in the lower position (200 Series traction units only).

Always raise the deck before adjusting or removing the spring.

2. On 200 Series traction units only, disconnect the counterbalance from the traction unit, remove the lock pins from the brackets, separate the spring tension assemblies from the brackets, and lay them down on the deck. Loosely secure the lock pins to the brackets to prevent losing them (Figure 1).

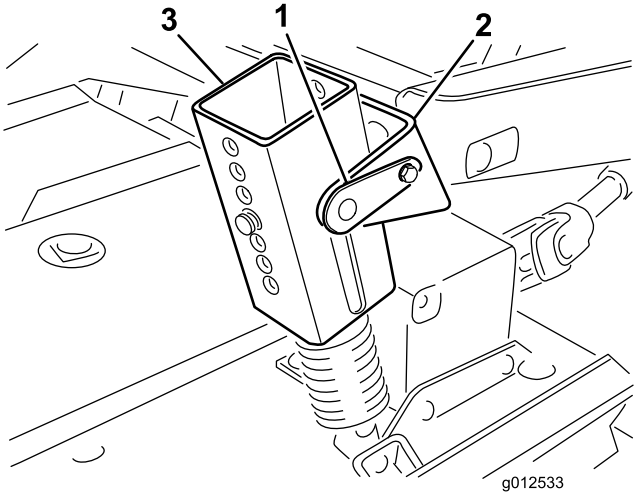

Figure 1

1. Lock pin
2. Bracket
3. Spring tension assembly

3. Lower the cutting unit and remove the 4 bolts and nuts securing lift arm brackets to castor arms (Figure 2).

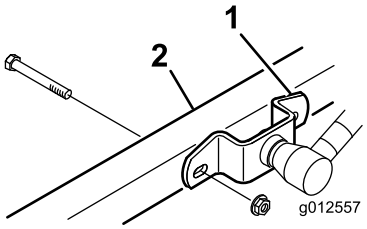

g012557

Figure 2

1. Lift arm bracket
2. Right castor arm

4. Start the engine and raise the traction unit lift arms.
5. Shut off the engine and slide the cutting unit away from the traction unit, separating the male and female sections of PTO shaft (Figure 3).

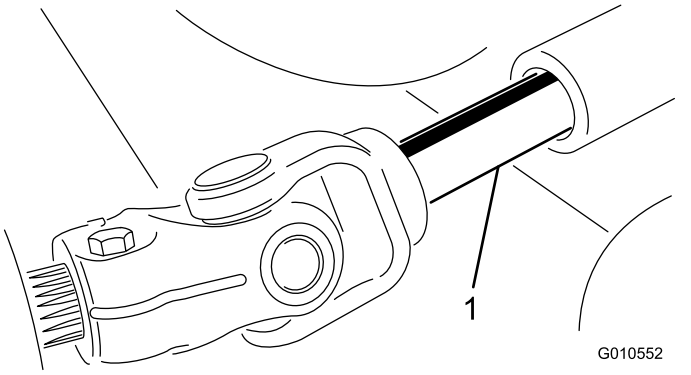

g010552

Figure 3

1. PTO shaft

⚠ CAUTION

If the engine is started and the PTO shaft is allowed to rotate, serious injury could result.

Do not start the engine and engage the PTO lever when the PTO shaft is not connected to the gear box on the cutting unit.

2

Installing the New Spindle Pulley

Parts needed for this procedure:

1	Double pulley
1	Pulley nut
1	Nut cover

Procedure

1. Unhook the latches securing the right cover to the top of the cutting unit. Remove the cover from the cutting unit.
2. Loosen the 2 nuts securing the idler plate so the tension of the idler pulley against the belt is released (Figure 4).

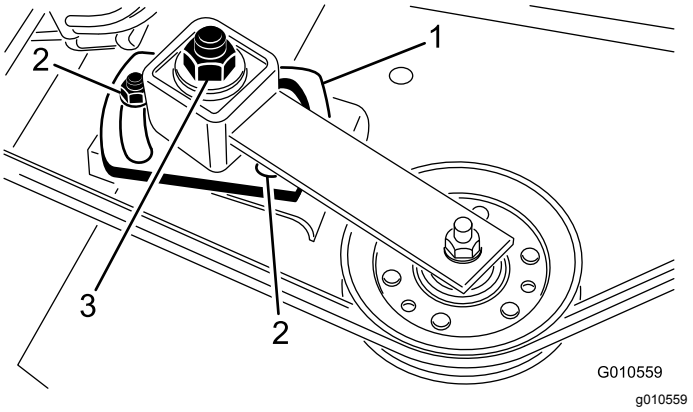

g010559

Figure 4

1. Idler plate
2. Nut (2)
3. Idler adjusting nut

3. Remove the belt from the right spindle pulley (Figure 4).
4. Remove the six carriage bolts and flange nuts securing the spindle housing assembly to the cutting unit (Figure 5). Slide the spindle housing assembly out of the bottom of the cutting unit.
5. Remove the nut and washer retaining the pulley on the spindle shaft. Remove the pulley from the shaft.
6. Slide the new double spindle pulley onto the spindle shaft. Do not install the pulley nut at this time.
7. Slide the pulley end of spindle housing assembly through the hole in the cutting unit, and loop the belt around the pulley and idler. Mount the

spindle assembly in place with 6 carriage bolts and flange nuts.

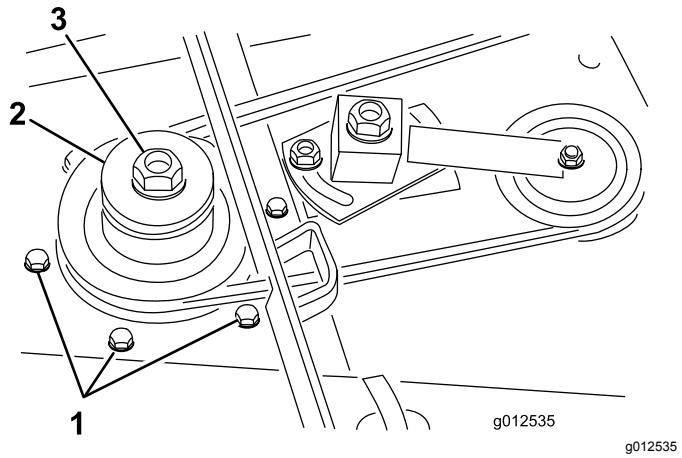

Figure 5

1. Carriage bolts
2. Double spindle pulley
3. Pulley nut

8. Install the original washer and new pulley nut onto the spindle shaft and tighten it to 100 ft-lb (135.5 N·m). Install the nut cover.
9. Adjust (tighten) the idler adjusting nut to 35 to 40 ft-lb (48 to 54 N·m) to achieve the proper belt tension. Tighten the idler plate nuts.

3

Installing the New Blades

Parts needed for this procedure:

3	Blade

Procedure

1. Grasp the end of blade using a thickly padded glove. Remove the blade bolt, anti-scalp cup, and blade from the spindle shaft (Figure 6).

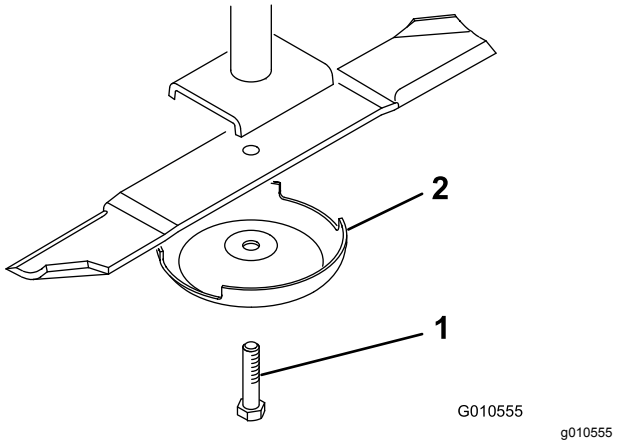

Figure 6

1. Blade bolt
2. Anti-scalp cup

2. In sequence, install a new blade (sail facing toward the cutting unit) and anti-scalp cup. Secure the parts in place with the blade bolt. Tighten the blade bolt to 85 to 110 ft-lb (115 to 149 N·m).
3. Repeat this procedure on all blades.

4

Removing and Modifying the Grass Deflector

Parts needed for this procedure:

2	Pivot brackets

Procedure

1. Remove the bolts, locknuts, and springs securing the deflector mounts to the pivot brackets (Figure 7). Remove the deflector.
2. Remove the carriage bolts and flange nuts securing the pivot brackets to the housing (Figure 7). Remove the pivot brackets. Retain the fasteners for future use.
3. Remove the 2 carriage bolts, flat washers, and locknuts securing the reinforcement plate to the under side of the housing and the stiffener plate to the top of the housing (Figure 7).

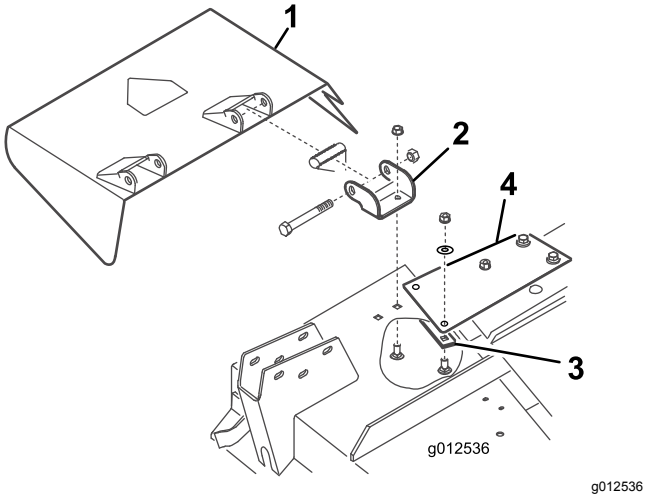

g012536

Figure 7

1. Grass deflector
2. Pivot brackets
3. Reinforcement plate
4. Stiffener plate

4. Using the bolts, locknuts, and springs previously removed, install the new pivot brackets to the deflector mounts (Figure 8). Do not over tighten the nuts because the brackets must be allowed to pivot. Save this assembly for side discharge operation.

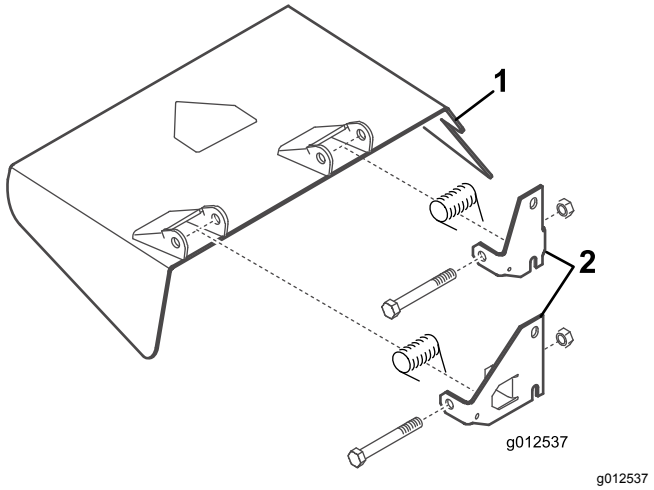

g012537

Figure 8

1. Grass deflector
2. Pivot brackets

5

Installing the Blower Mounting Brackets

Parts needed for this procedure:

1	Blower assembly with mounting brackets
3	Capscrew, 5/16 x 1 inch
4	Locknut, 5/16
4	Carriage bolt, 3/8 inch x 3/4 inch
3	Flange nut, 3/8 inch

Procedure

1. Remove the fasteners securing the right hand deck cover spring latch to the right side of the cutting deck (Figure 9). Remove and retain the latch for future use with the right hand cover.
2. Position the blower and mounting brackets on the deck, aligning the mounting holes with the holes previously used for mounting the grass deflector. Figure 9 is shown with the blower removed from the brackets. Make sure there is no gap between the blower and cutting deck.

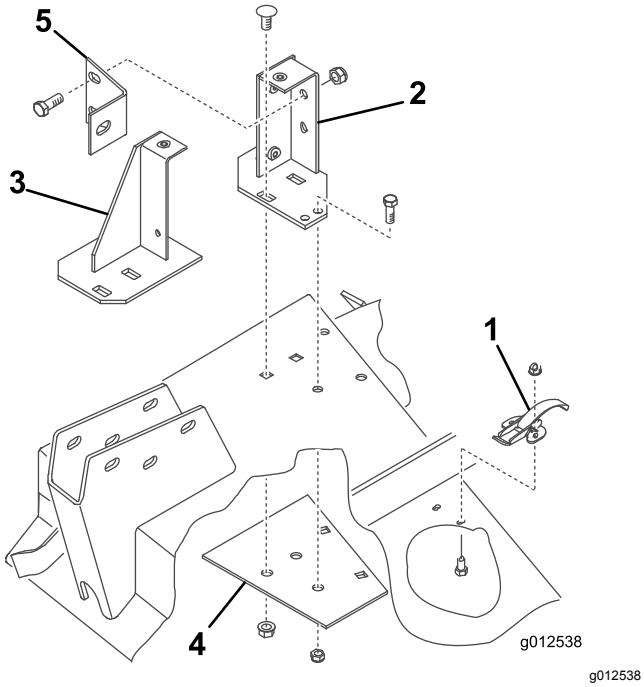

g012538

Figure 9

1. Spring latch
2. Rear mounting bracket
3. Front mounting bracket
4. Reinforcement plate
5. Blower brace

3. Position the new reinforcement plate under the deck aligning the mounting holes with the holes previously used for mounting the grass deflector (Figure 9).
4. Mount the front and rear brackets and reinforcement plate to the deck with 2 previously removed carriage bolts (3/8 -16 x 7/8 inch) and flange nuts each (Figure 9). The bolt heads must be on top of the deck.
5. Remove the 2 knobs securing the blower to the mounting brackets. Remove the blower.
6. Using each bracket as a template, mark the location and drill 2 additional 11/32 inch diameter holes. (2 holes for the rear bracket and 1 for the front bracket. Use the reinforcement plate for a template to drill one of the 11/32 inch diameter holes for the rear bracket.

   Note: Use caution when drilling the holes so that the castor arm is not damaged.
7. Secure the brackets and reinforcement plate to the deck with bolts (5/16-18 x 3/4 inch) and locknuts (Figure 9). The bolt heads must be on top of the deck.
8. Mount the blower brace to the rear mounting bracket with 2 bolts (3/8-16 x 1 inch) and locknuts (Figure 9) and to the castor arm with a bolt (3/8-16 x 1 inch).
9. When mounting the lift arm brackets to the castor arms, mount other side of the blower brace to the lift arm bracket and the right castor arm with the bolt and nut previously removed.

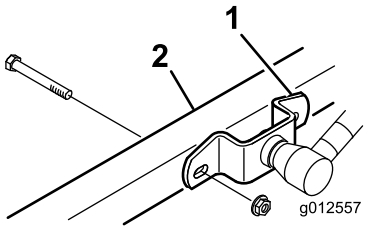

g012557

Figure 10

1. Lift arm bracket
2. Right castor arm

6

Installing the Deck Deflectors

Parts needed for this procedure:

1	Front deflector
1	Rear deflector
1	Rear shelf
1	Left shelf
1	Right shelf
6	Capscrew, 5/16 x 5/8 inch
6	Locknut, 5/16 inch
4	Capscrew, 3/8 x 1 inch
4	Lockwasher, 3/8 inch
3	Capscrew, 1/4 x 1 inch
3	Capscrew, 1/4 x 3/4 inch
6	Locknut, 1/4 inch

Procedure

1. Insert the front deflector into the deck, aligning the end of the deflector with the edge of the discharge opening (Figure 11 and Figure 12).

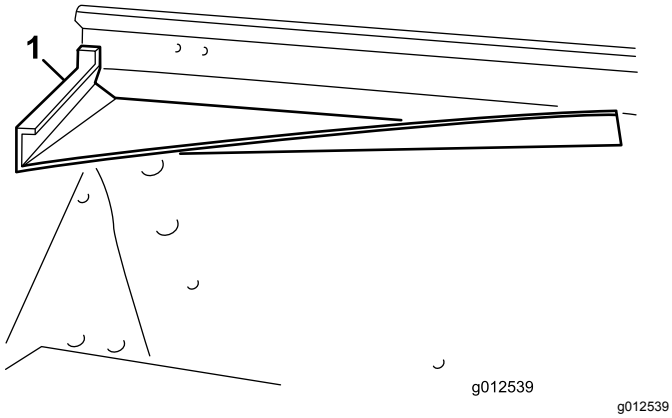

Figure 11

1. Front deflector

2. Using the deflector as a template, mark and drill three 11/32 inch diameter holes through front and top of deck.
3. Secure the 2 front mounting tabs of deflector to the deck with bolts (5/16-18 x 5/8 inch) and locknuts (5/16-18 inch).
4. Secure the front right corner of the front mounting bracket and the top tab of the deflector to the deck with a bolt (5/16-18 x 1 inch) and locknut.

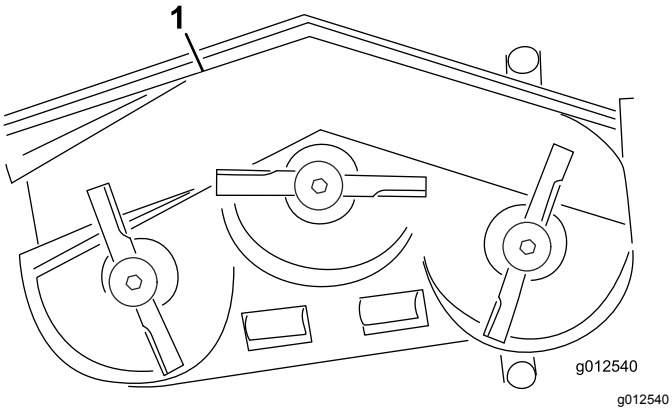

Figure 12

1. Front deflector
2. Rear deflector
3. Rear shelf
4. Left shelf
5. Right shelf

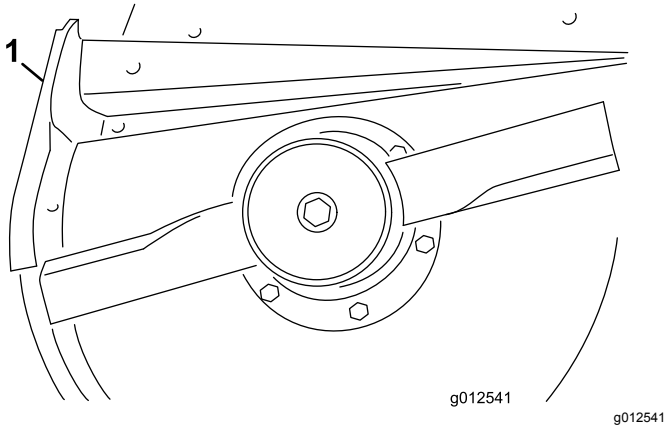

Figure 13

1. Rear deflector

5. Using the deflector as a template, mark and drill three 11/32 inch diameter holes through the deck.
6. Secure the deflector to the deck with 3 bolts (5/16-18 x 5/8 inch) and locknuts (5/16-18 inch).
7. Before mounting the left and right shelves to the deck, you must grind the welds off of the bottom edge of the deck. Paint the deck after grinding.
8. Using the existing holes, mount the rear shelf to the deck with 4 bolts (3/8-16 x 1 inch) and lock washers (3/8 inch) (Figure 14).

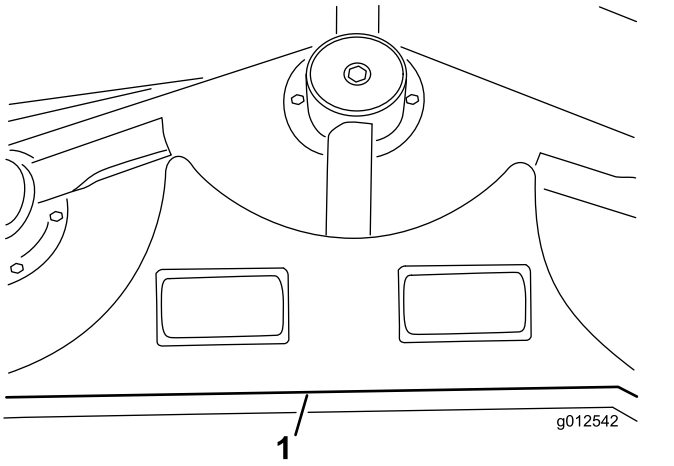

Figure 14

1. Rear shelf

9. Align the left shelf with the left end of the rear shelf and the edge of the deck (Figure 12 and Figure 14).
10. Secure the left shelf to the deck with 2 bolts (1/4-20 x 1 inch), 1 bolt (1/4-20 x 3/4 inch), and 3 locknuts (Figure 15). Position the bolt heads to the inside of the deck.

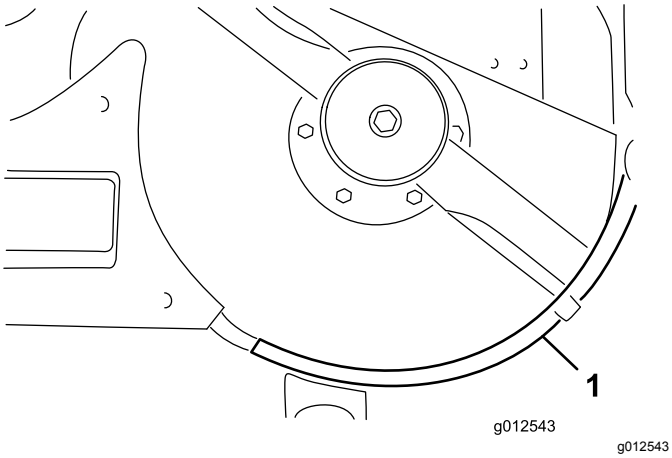

Figure 15

1. Left shelf

11. Align the right shelf with the right end of the rear shelf and the edge of the deck (Figure 12 and Figure 16). Using the left shelf as a template, locate, mark, and drill three 9/32 inch diameter holes in the deck.

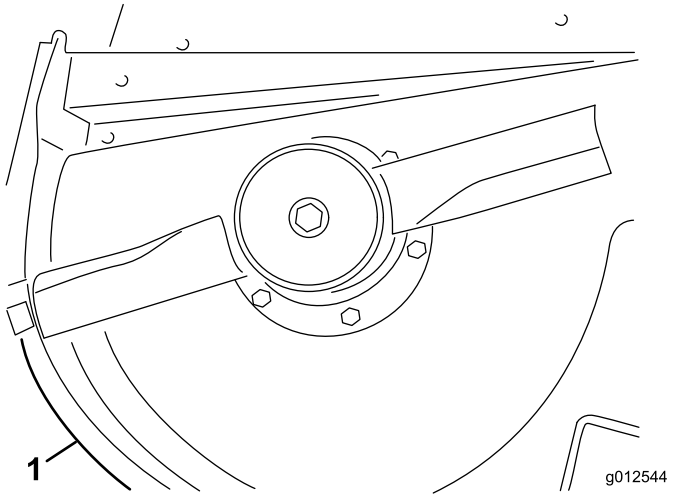

Figure 16

1. Right shelf

12. Secure the right shelf to the deck with 1 bolt (1/4-20 x 1 inch), 2 bolts (1/4-20 x 3/4 inch), and 3 locknuts. Position the bolt heads to the inside of the deck.

7

Mounting the New Deflector Stop

Parts needed for this procedure:

1	Deflector stop
2	Capscrew, 1/4 x 3/4 inch
2	Locknut, 1/4 inch

Procedure

1. Using the new deflector stop as a template, set it on the original flat deflector stop (Figure 17). Ensure that the new deflector stop is flush at the bottom, contacting the side of the deck, and parallel with the outside edge of the deflector support.

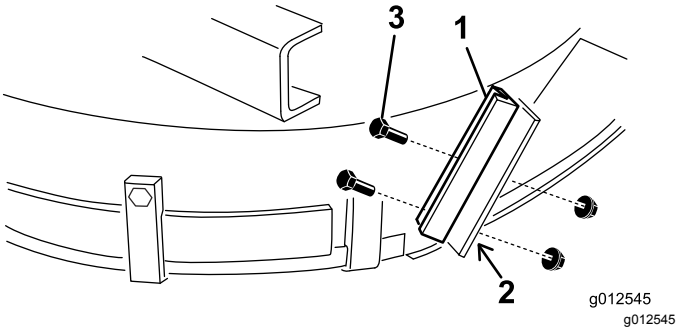

Figure 17

1. New deflector stop
2. Mark and drill holes
3. Bolts and locknuts

2. Locate, mark and drill two 9/32 inch diameter holes through the old deflector support.
3. Mount the new deflector support to the old deflector stop with 2 bolts (1/4-20 x 3/4 inch) and locknuts (1/4-20 inch), as shown in Figure 17.

8

Mounting the Idler Assembly

Parts needed for this procedure:

1	Idler arm assembly
1	Pivot screw
1	Bushing
2	Washer
1	Locknut, 3/8 inch
1	Spring
1	Threaded rod
2	Flange nut, 5/16 inch
1	Spring bracket
2	Capscrew, 1/4 x 1 inch
2	Locknut, 1/4 inch

Procedure

1. Using the dimensions shown in Figure 18, locate, mark, and drill a 13/32 inch diameter hole in the deck. The dimensions shown are from the right front corner of the deck and from the edge of the discharge opening. The blower brackets are removed for clarity.

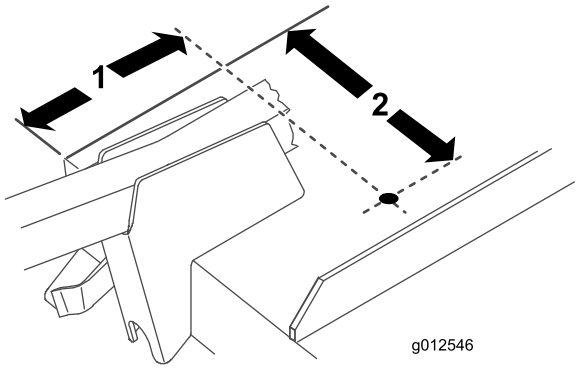

g012546

Figure 18

1. 6-13/16 inches
2. 9-1/8 inches

2. Using the dimensions shown in Figure 19, locate, mark, and drill a 13/16 inch diameter hole and two 13/32 inch diameter holes in the right bridge bar.

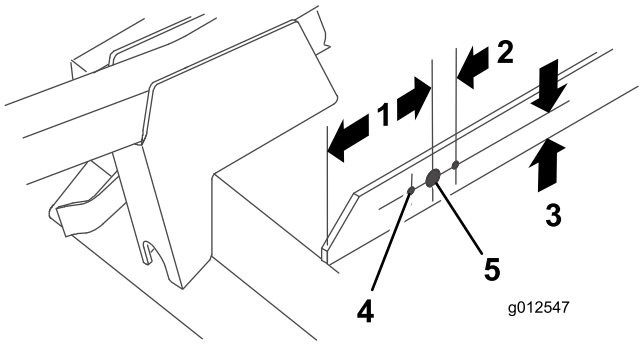

g012547

Figure 19

1. 5 inches
2. 1-1/16 inches (2)
3. 1 inch
4. 13/32 inch diameter (2)
5. 13/16 inch diameter

3. Thread a flange nut (5/16-18 inch) approximately 2 inches (5 cm) onto the threaded rod (Figure 20).

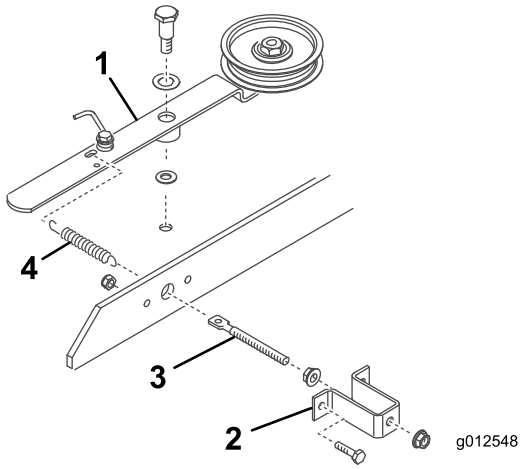

g012548

Figure 20

1. Idler pulley arm
2. Spring bracket
3. Threaded rod
4. Spring

4. Insert the end of the threaded rod through the large hole in the spring bracket and loosely secure it with another flange nut (5/16-18 inch) (Figure 20). Do not tighten the flange nuts.
5. Insert the other end of the threaded rod through the hole in the bridge bar and secure the spring bracket to the bridge with 2 bolts and locknuts (Figure 20).
6. Hook the short loop of the spring into the hole in the threaded rod and the long loop in the hole in the idler arm (Figure 20).
7. Mount the idler pulley arm to the deck with a pivot screw (3/8-16 inch), a thrust washer (1/2 inch), the idler arm, a thrust washer (3/8 inch), and a locknut (3/8-16 inch) beneath the deck (Figure 20).

Important: **Do not tighten the flange nuts on the threaded rod at this time. Adjust the spring tension after the blower assembly and belt have been installed.**

9

Mounting the Blower

Parts needed for this procedure:

1	Belt

Procedure

1. Route the belt around the small deck spindle pulley.
2. Slide the blower onto the mounting bracket alignment studs (Figure 21) while routing the belt around the blower pulley.

   Note: If the blower does not easily slide onto the mounting brackets, loosen the alignment bolts slightly.

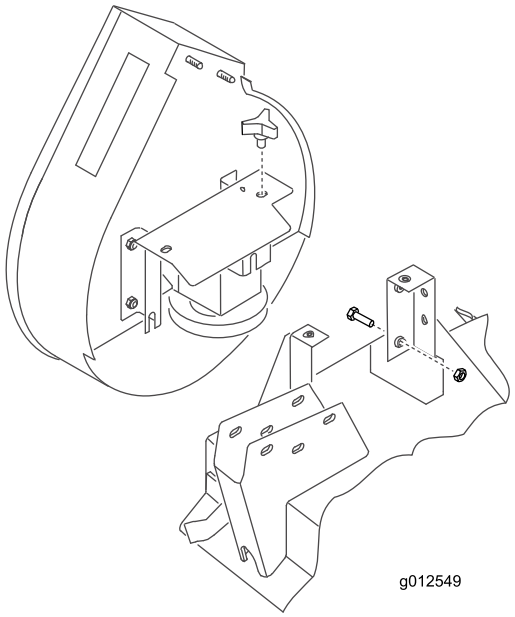

g012549

Figure 21

3. Secure the blower to the brackets with 2 knobs.
4. Adjust the spring length to 4-7/8 inches (12.4 cm) for proper belt tension by adjusting the flange nuts on the threaded rod.

10

Install the Bumper

Parts needed for this procedure:

1	Bumper
4	Capscrew, 5/16 x 3 inch
4	Locknut, 5/16 inch

Procedure

1. Using dimensions shown in Figure 22, locate, mark and drill a 11/32 inch diameter hole through both walls of the right front castor arm bracket.

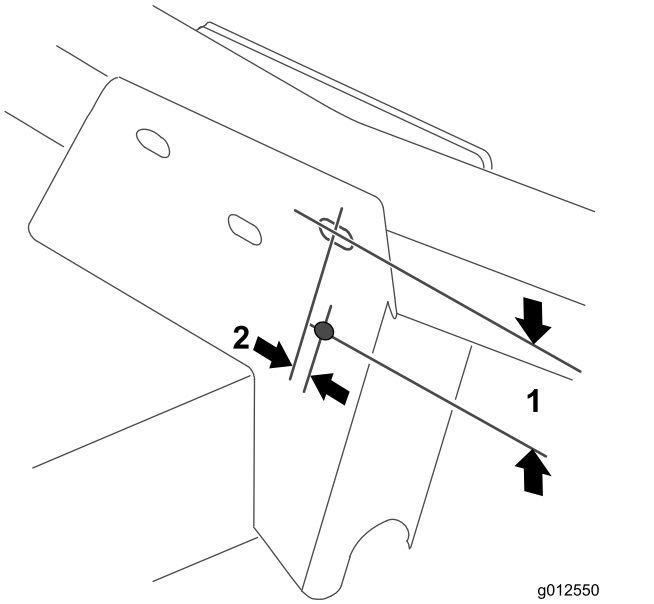

g012550

Figure 22

1. 2-1/2 inches
2. 3/8 inch

2. Secure the top mounting hole of the front mounting plate of the bumper to the castor arm bracket with a bolt (5/16 -18 x 3 inch) and locknut (Figure 23).

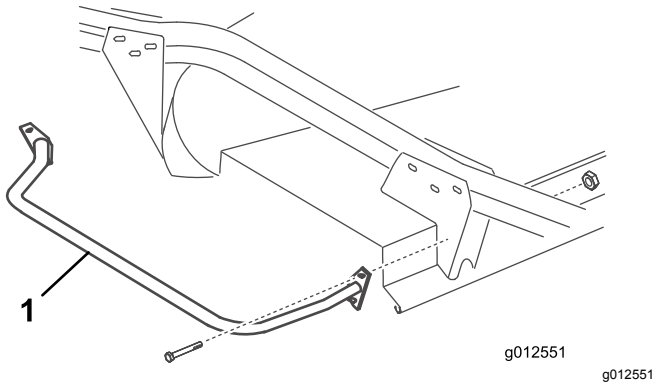

Figure 23

1. Bumper

3. Using both mounting plates of the bumper as templates, locate, mark, and drill 3 additional 11/32 inch diameter holes through both walls of the front and rear castor arm brackets.

11

Installing the New Deck Cover

Parts needed for this procedure:

1	Trim molding
1	Deck cover

Procedure

1. Insert a trim molding onto the right bridge bar, so the side of the spring bracket is 10 cm (4 inches) to the far edge of the trim molding (Figure 24).

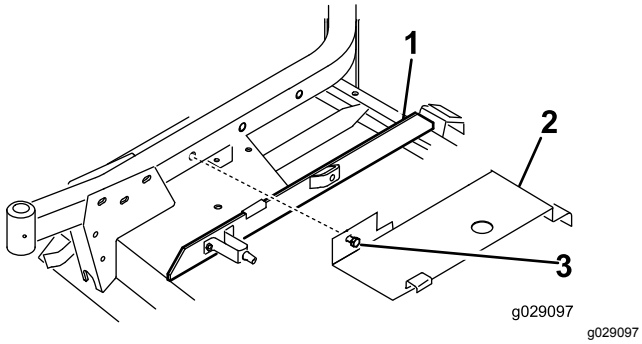

Figure 24

1. Trim molding
2. Cover
3. Bolt

2. Hook the rear of the deck cover (Figure 24) onto the rear channel pin while aligning the cover mounting bolt with the hole in the right castor arm. The cover is to rest on the trim molding. Adjust the molding as required.
3. Secure the cover to the right castor arm with the bolt.

12

Installing the New Safety Guards

Parts needed for this procedure:

1	Belt guard
1	Pulley guard

Procedure

1. Install the belt guard onto the machine (Figure 25).

   Note: Use existing hardware on the machine by removing it and using it to install the guard.

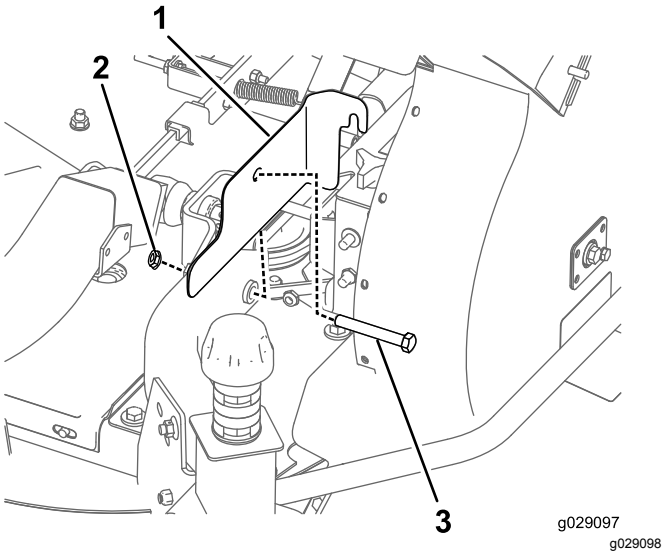

Figure 25

1. Belt guard
2. Nut
3. Bolt

2. Install the pulley guard onto the machine (Figure 26).

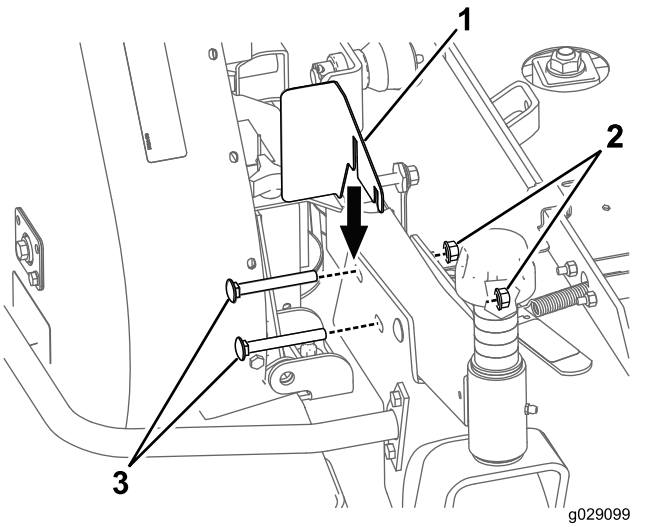

Figure 26

1. Pulley guard
2. Nut
3. Bolt

Note: Use existing hardware on the machine by removing it and using it to install the guard.

13

Installing the New Counterbalance Spring (200 Series traction units only)

Parts needed for this procedure:

1	Counterbalance spring

Procedure

To compensate for the additional weight of the blower assembly, the original light counterbalance spring at the right side of the machine, must be replaced with the heavier spring included (Figure 27).

1. Remove the hair pin cotter and clevis pin and slide the spring assembly out of the retaining bracket.
2. Screw the spring off of the top and bottom mounting brackets.
3. Screw the new heavy spring onto both mounting brackets. Ensure that the spring is completely threaded through all holes and it contacts the flat side of the bracket.

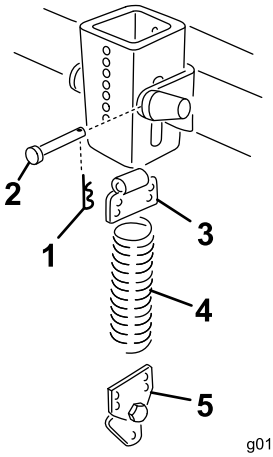

Figure 27

1. Hair pin cotter
2. Clevis pin
3. Top bracket
4. Spring
5. Bottom bracket

4. Install the spring assembly into the retaining bracket with a clevis pin and hairpin cotter.

14

Installing the Cutting Unit to the Traction Unit

No Parts Required

Procedure

1. Engage the parking brake, ensure that the traction pedal is in neutral and the PTO lever is in the Off position. Start the engine and raise the lift arms. Shut off the engine.
2. Position the cutting unit in front of the traction unit and align the gear case input shaft with the PTO shaft; install the shaft.
3. Carefully lower the lift arms while aligning the lift arm brackets with the castor arms. Align the PTO shaft hole with the gear case input shaft hole and install the roll pin.
4. Secure the lift arm brackets and the side of the blower brace to the castor arms with 4 bolts and nuts.
5. Start the engine and raise the cutting unit. Secure the counterbalance springs to the cutting unit with shoulder bolts and locknuts.

15

Installing the New Decal

Parts needed for this procedure:

1	Decal, danger

Procedure

Install the Danger Decal (Part Number 66-1340 or 93-7824 for CE) on the front edge of the deck, inside the right castor arm.

16

Mounting the Blower Housing Chute

Parts needed for this procedure:

1	Chute assembly

Procedure

Important: **When the chute in the Blower Kit is used with a 15 cubic foot Hopper Kit, you must cut off a section of the chute to ensure proper fit between the blower and the hopper. If used with another kit, proceed to step 3.**

1. Using the dimensions shown in Figure 28, use a tape measure and mark the chute.

   Note: For convenience, some chutes may have a light scribe mark where the chute must be cut off.

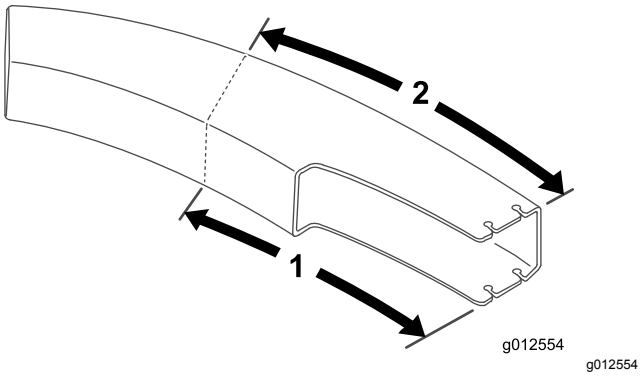

Figure 28

1. 61.2 cm (24.12 inches)
2. 70.5 cm (27.75 inches)

2. Draw lines around all sides of the chute and cut off with a saw.
3. Set the deck to the desired height-of-cut setting.
4. Slide the chute over the blower opening and onto the mounting studs (Figure 29).

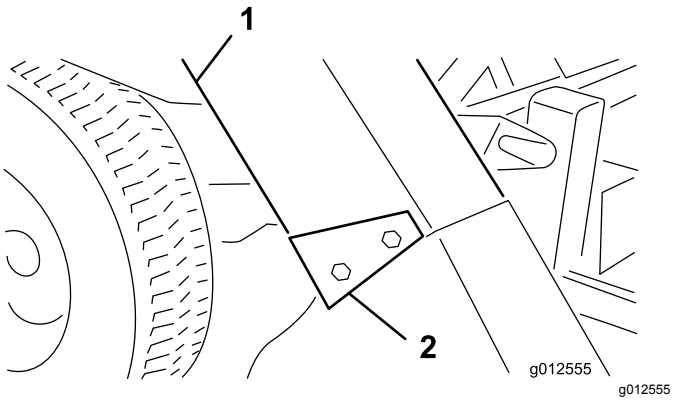

Figure 29

1. Chute
2. Chute brackets

5. Lower the hopper hood and align the chute with the hood snout. Secure the chute in position with 4 locknuts (5/16 inch) and chute brackets. Position the wide end of brackets to the rear.

Operation

Operating Characteristics

(When used with a 9 cu. ft. or 15 cu. ft. Hopper Kit)

⚠ CAUTION

When the grass collector is removed, moving components are exposed.

Do not operate without the deflector in place.

For best performance, regulate the traction pedal to keep the engine rpm high and somewhat constant. A good rule to follow is: decrease ground speed as the load on the cutting blade increases; and increase ground speed as the load on the blade decreases. This allows the engine, working with the transmission, to sense the proper ground speed while maintaining high blade tip speed necessary for good quality-of-cut, vacuuming action, and to throw grass into hopper. If blower speed drops too low, plugging may result. Refer to the *Cutting Unit and Traction Unit Operator's Manual* for operation of each.

⚠ DANGER

Moving components are dangerous.

Do not place hands or feet in the chute, blower, or cutting unit.

1. This grass collector is designed for use in wet or dry conditions. Do not collect extremely long grass as the hopper will fill too quickly.
2. When bagging wet, heavy grass, some clippings may not be thrown completely through the chute. The hole in the bottom of the chute allows these clippings to drop out without plugging the chute. When this happens, reduce the ground speed.
3. The bumper which protects the blower housing does not extend far enough to eliminate the chance of the bagger striking a stationary object. Stay far enough away from obstructions to avoid collisions. Trim with the left side of the cutting unit only.

   ⚠ CAUTION

   Striking an object with the bagger can cause damage to the machine.

   - **Use care to avoid collision between the hopper and any stationary objects.**
   - **Always trim with the left side of the cutting unit.**
4. While operating, check frequently for excessive clippings left on the turf or uncut grass. If those conditions occur, the blower or cutting unit may be plugged. Shut off the unit, disengage the PTO, set the brake, and shut off the engine. Check for obstructions in the chute, blower or cutting unit. Clear any obstruction using a stick or similar tool. Check the blower belt tension. If it is slipping, readjust the tension.
5. Cut grass often, especially when it grows rapidly. If shorter turf is desired, cut the grass again. Overlap the swaths to produce an even cutting pattern.

   Important: **When transporting the unit, tie down the grass collector hood or back it onto the truck or trailer to avoid wind throwing the hood open and damaging it.**

Removing the Blower

1. Shut off the engine and disengage the idler. Secure the idler to the front castor arm bracket with the retaining hook.
2. Remove the belt cover and lift the belt off of the spindle pulley. Install the cover.
3. Remove the 2 knobs securing the blower to the mounting brackets and remove the blower, belt, and chute.
4. Reverse the procedure to install the blower assembly.

Using the Grass Deflector

At some time you may wish to operate the cutting deck without the blower. Since a new pivot should have already been installed on the grass deflector, you can quickly mount the deflector to the blower mounting brackets.

1. Remove the bumper from the deck.
2. Slide the slots at bottom of the deflector pivot bracket onto the bolts at side of the deck brackets (Figure 30).

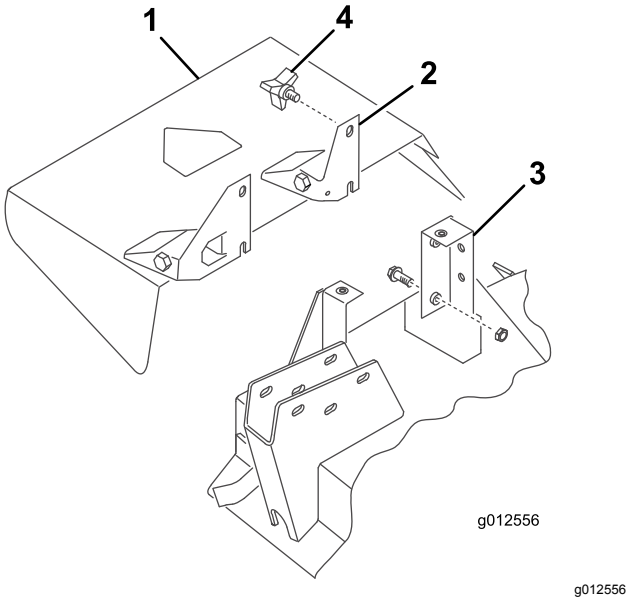

Figure 30

1. Grass deflector
2. Pivot bracket
3. Deck bracket
4. Knob

3. Secure the deflector in place with the 2 knobs.

Maintenance

- Check the blower gearbox impeller for tightness every 50 hours. Torque the impeller shaft bolt to 25 to 25.8 N·m (220 to 230 in-lb).
- Clean grass clippings from the hood, chute, blower, and cutting unit after each use. Wash the underside of the cutting unit daily with hose. An excessive buildup of clippings will impair the collection system performance.
- Check the belt tension and wear every 50 hours. To adjust the belt tension, loosen the idler mounting screws, engage the idler lever, and push the idler pulley firmly into the blower belt. Tighten the mounting screws.
- The blower gear box should need little maintenance. Check for leakage every 50 hours. If leakage should occur, replace the seals and refill it with 2 fl oz of high quality moly disulfide grease. Repack the bearings with this grease before assembling.
- Refer to Cutting Unit and Traction Unit *Operator's Manuals* for the service requirements of each.
- Keep the unit clean. Ensure that the engine is free of dirt and chaff. Ensure that all fasteners are tight. Check the deflectors, baffles, and shields for wear and replace as needed.

Declaration of Incorporation

Model No.	Serial No.	Product Description	Invoice Description	General Description	Directive
30506	403000001 and Up	62in Blower Kit, Groundsmaster 200/3280-D/3320 Series Side Discharge Mowers	GM200 62" BLOWER KIT	62in Blower Kit	2006/42/EC, 2000/14/EC

Relevant technical documentation has been compiled as required per Part B of Annex VII of 2006/42/EC.

We will undertake to transmit, in response to requests by national authorities, relevant information on this partly completed machinery. The method of transmission shall be electronic transmittal.

This machinery shall not be put into service until incorporated into approved Toro models as indicated on the associated Declaration of Conformity and in accordance with all instructions, whereby it can be declared in conformity with all relevant Directives.

Certified:



John Heckel
Sr. Engineering Manager
8111 Lyndale Ave. South
Bloomington, MN 55420, USA
December 20, 2018

Authorized Representative:

Marcel Dutrieux
Manager European Product Integrity
Toro Europe NV
Nijverheidsstraat 5
2260 Oevel
Belgium

Tel. +32 16 386 659

EEA/UK Privacy Notice

Toro's Use of Your Personal Information

The Toro Company ("Toro") respects your privacy. When you purchase our products, we may collect certain personal information about you, either directly from you or through your local Toro company or dealer. Toro uses this information to fulfil contractual obligations - such as to register your warranty, process your warranty claim or to contact you in the event of a product recall - and for legitimate business purposes - such as to gauge customer satisfaction, improve our products or provide you with product information which may be of interest. Toro may share your information with our subsidiaries, affiliates, dealers or other business partners in connection these activities. We may also disclose personal information when required by law or in connection with the sale, purchase or merger of a business. We will never sell your personal information to any other company for marketing purposes.

Retention of your Personal Information

Toro will keep your personal information as long as it is relevant for the above purposes and in accordance with legal requirements. For more information about applicable retention periods please contact legal@toro.com.

Toro's Commitment to Security

Your personal information may be processed in the US or another country which may have less strict data protection laws than your country of residence. Whenever we transfer your information outside of your country of residence, we will take legally required steps to ensure that appropriate safeguards are in place to protect your information and to make sure it is treated securely.

Access and Correction

You may have the right to correct or review your personal data, or object to or restrict the processing of your data. To do so, please contact us by email at legal@toro.com. If you have concerns about the way in which Toro has handled your information, we encourage you to raise this directly with us. Please note that European residents have the right to complain to your Data Protection Authority.

California Proposition 65 Warning Information

What is this warning?

You may see a product for sale that has a warning label like the following:



WARNING: Cancer and Reproductive Harm—www.p65Warnings.ca.gov.

What is Prop 65?

Prop 65 applies to any company operating in California, selling products in California, or manufacturing products that may be sold in or brought into California. It mandates that the Governor of California maintain and publish a list of chemicals known to cause cancer, birth defects, and/or other reproductive harm. The list, which is updated annually, includes hundreds of chemicals found in many everyday items. The purpose of Prop 65 is to inform the public about exposure to these chemicals.

Prop 65 does not ban the sale of products containing these chemicals but instead requires warnings on any product, product packaging, or literature with the product. Moreover, a Prop 65 warning does not mean that a product is in violation of any product safety standards or requirements. In fact, the California government has clarified that a Prop 65 warning "is not the same as a regulatory decision that a product is 'safe' or 'unsafe.'" Many of these chemicals have been used in everyday products for years without documented harm. For more information, go to https://oag.ca.gov/prop65/faqs-view-all.

A Prop 65 warning means that a company has either (1) evaluated the exposure and has concluded that it exceeds the "no significant risk level"; or (2) has chosen to provide a warning based on its understanding about the presence of a listed chemical without attempting to evaluate the exposure.

Does this law apply everywhere?

Prop 65 warnings are required under California law only. These warnings are seen throughout California in a wide range of settings, including but not limited to restaurants, grocery stores, hotels, schools, and hospitals, and on a wide variety of products. Additionally, some online and mail order retailers provide Prop 65 warnings on their websites or in catalogs.

How do the California warnings compare to federal limits?

Prop 65 standards are often more stringent than federal and international standards. There are various substances that require a Prop 65 warning at levels that are far lower than federal action limits. For example, the Prop 65 standard for warnings for lead is 0.5 µg/day, which is well below the federal and international standards.

Why don't all similar products carry the warning?

- Products sold in California require Prop 65 labelling while similar products sold elsewhere do not.
- A company involved in a Prop 65 lawsuit reaching a settlement may be required to use Prop 65 warnings for its products, but other companies making similar products may have no such requirement.
- The enforcement of Prop 65 is inconsistent.
- Companies may elect not to provide warnings because they conclude that they are not required to do so under Prop 65; a lack of warnings for a product does not mean that the product is free of listed chemicals at similar levels.

Why does Toro include this warning?

Toro has chosen to provide consumers with as much information as possible so that they can make informed decisions about the products they buy and use. Toro provides warnings in certain cases based on its knowledge of the presence of one or more listed chemicals without evaluating the level of exposure, as not all the listed chemicals provide exposure limit requirements. While the exposure from Toro products may be negligible or well within the "no significant risk" range, out of an abundance of caution, Toro has elected to provide the Prop 65 warnings. Moreover, if Toro does not provide these warnings, it could be sued by the State of California or by private parties seeking to enforce Prop 65 and subject to substantial penalties.

The Toro Warranty

Two-Year or 1,500 Hours Limited Warranty

Conditions and Products Covered

The Toro Company and its affiliate, Toro Warranty Company, pursuant to an agreement between them, jointly warrant your Toro Commercial product ("Product") to be free from defects in materials or workmanship for 2 years or 1,500 operational hours*, whichever occurs first. This warranty is applicable to all products with the exception of Aerators (refer to separate warranty statements for these products). Where a warrantable condition exists, we will repair the Product at no cost to you including diagnostics, labor, parts, and transportation. This warranty begins on the date the Product is delivered to the original retail purchaser.
* Product equipped with an hour meter.

Instructions for Obtaining Warranty Service

You are responsible for notifying the Commercial Products Distributor or Authorized Commercial Products Dealer from whom you purchased the Product as soon as you believe a warrantable condition exists. If you need help locating a Commercial Products Distributor or Authorized Dealer, or if you have questions regarding your warranty rights or responsibilities, you may contact us at:

Toro Commercial Products Service Department
Toro Warranty Company
8111 Lyndale Avenue South
Bloomington, MN 55420-1196

952–888–8801 or 800–952–2740
E-mail: commercial.warranty@toro.com

Owner Responsibilities

As the product owner, you are responsible for required maintenance and adjustments stated in your *Operator's Manual*. Repairs for product issues caused by failure to perform required maintenance and adjustments are not covered under this warranty.

Items and Conditions Not Covered

Not all product failures or malfunctions that occur during the warranty period are defects in materials or workmanship. This warranty does not cover the following:

- Product failures which result from the use of non-Toro replacement parts, or from installation and use of add-on, or modified non-Toro branded accessories and products.
- Product failures which result from failure to perform recommended maintenance and/or adjustments.
- Product failures which result from operating the Product in an abusive, negligent, or reckless manner.
- Parts consumed through use that are not defective. Examples of parts which are consumed, or used up, during normal Product operation include, but are not limited to, brake pads and linings, clutch linings, blades, reels, rollers and bearings (sealed or greasable), bed knives, spark plugs, castor wheels and bearings, tires, filters, belts, and certain sprayer components such as diaphragms, nozzles, and check valves.
- Failures caused by outside influence, including, but not limited to, weather, storage practices, contamination, use of unapproved fuels, coolants, lubricants, additives, fertilizers, water, or chemicals.
- Failure or performance issues due to the use of fuels (e.g. gasoline, diesel, or biodiesel) that do not conform to their respective industry standards.
- Normal noise, vibration, wear and tear, and deterioration. Normal "wear and tear" includes, but is not limited to, damage to seats due to wear or abrasion, worn painted surfaces, scratched decals or windows.

Parts

Parts scheduled for replacement as required maintenance are warranted for the period of time up to the scheduled replacement time for that part. Parts replaced under this warranty are covered for the duration of the original product warranty and become the property of Toro. Toro will make the final decision whether to repair any existing part or assembly or replace it. Toro may use remanufactured parts for warranty repairs.

Deep Cycle and Lithium-Ion Battery Warranty

Deep cycle and Lithium-Ion batteries have a specified total number of kilowatt-hours they can deliver during their lifetime. Operating, recharging, and maintenance techniques can extend or reduce total battery life. As the batteries in this product are consumed, the amount of useful work between charging intervals will slowly decrease until the battery is completely worn out. Replacement of worn out batteries, due to normal consumption, is the responsibility of the product owner. Note: (Lithium-Ion battery only): Pro-rated after 2 years. Refer to the battery warranty for additional information.

Lifetime Crankshaft Warranty (ProStripe 02657 Model Only)

The Prostripe which is fitted with a genuine Toro Friction Disc and Crank-Safe Blade Brake Clutch (integrated Blade Brake Clutch (BBC) + Friction Disc assembly) as original equipment and used by the original purchaser in accordance with recommended operating and maintenance procedures, are covered by a Lifetime Warranty against engine crankshaft bending. Machines fitted with friction washers, Blade Brake Clutch (BBC) units and other such devices are not covered by the Lifetime Crankshaft Warranty.

Maintenance is at Owner's Expense

Engine tune-up, lubrication, cleaning and polishing, replacement of filters, coolant, and completing recommended maintenance are some of the normal services Toro products require that are at the owner's expense.

General Conditions

Repair by an Authorized Toro Distributor or Dealer is your sole remedy under this warranty.

Neither The Toro Company nor Toro Warranty Company is liable for indirect, incidental or consequential damages in connection with the use of the Toro Products covered by this warranty, including any cost or expense of providing substitute equipment or service during reasonable periods of malfunction or non-use pending completion of repairs under this warranty. Except for the Emissions warranty referenced below, if applicable, there is no other express warranty. All implied warranties of merchantability and fitness for use are limited to the duration of this express warranty.

Some states do not allow exclusions of incidental or consequential damages, or limitations on how long an implied warranty lasts, so the above exclusions and limitations may not apply to you. This warranty gives you specific legal rights, and you may also have other rights which vary from state to state.

Note Regarding Emissions Warranty

The Emissions Control System on your Product may be covered by a separate warranty meeting requirements established by the U.S. Environmental Protection Agency (EPA) and/or the California Air Resources Board (CARB). The hour limitations set forth above do not apply to the Emissions Control System Warranty. Refer to the Engine Emission Control Warranty Statement supplied with your product or contained in the engine manufacturer's documentation.

Countries Other than the United States or Canada

Customers who have purchased Toro products exported from the United States or Canada should contact their Toro Distributor (Dealer) to obtain guarantee policies for your country, province, or state. If for any reason you are dissatisfied with your Distributor's service or have difficulty obtaining guarantee information, contact your Authorized Toro Service Center.