Form No. 3429-516 Rev A

TORO®

Count on it.

Parts Catalog

62in Blower Kit

Groundsmaster® 200/3280-D/3320 Series Side Discharge Mowers

Model No. 30506—Serial No. 403000001 and Up

Register at www.Toro.com.
Original Instructions (EN)

CE

3429-516 A

Ordering Replacement Parts

To order replacement parts, please supply the part number, the quantity, and the description of each part desired.

Understanding Reference Numbers

Each identified part in an illustration has a reference number. The reference number for a part also appears in the parts list, along with other information about the part.

This catalog uses two special reference number formats, one to indicate parts in a service assembly and another to indicate the quantity of a given part in an illustration.

Service Assembly Reference Numbers

Parts in service assemblies have reference numbers in the form a:b. The a represents the reference number of the entire service assembly and the b represents a sequential number unique to each part within the service assembly.

For example, a wheel assembly might be identified by reference number 6, the tire by 6:1, the valve by 6:2, and the wheel by 6:3. When you order the assembly identified by reference number 6, you receive all parts identified by reference numbers 6:1,6:2, and 6:3. However, you may also order any part individually. Reference numbers of this type appear in illustration and in parts lists.

Reference Numbers Indicating Quantity

In an illustration, if a reference number indicates more than one part, the reference number has the form nX y. The n represents the quantity of the part, the X is the multiplication symbol, and the y represents the reference number.

For example, in an illustration, the reference number 2X 37 means that two of the parts identified by reference number 37 are indicated.

Contents

Blower Housing and Mount Assembly. 4
Shelf and Deflector Assembly 5
Pulley and Bumper Assembly. 6
Counterbalance Spring, Front and Back Pivot Bracket Assembly. 7

© 2019—The Toro® Company
8111 Lyndale Avenue South
Bloomington, MN 55420

Contact us at www.Toro.com.
Printed in the USA.
All Rights Reserved

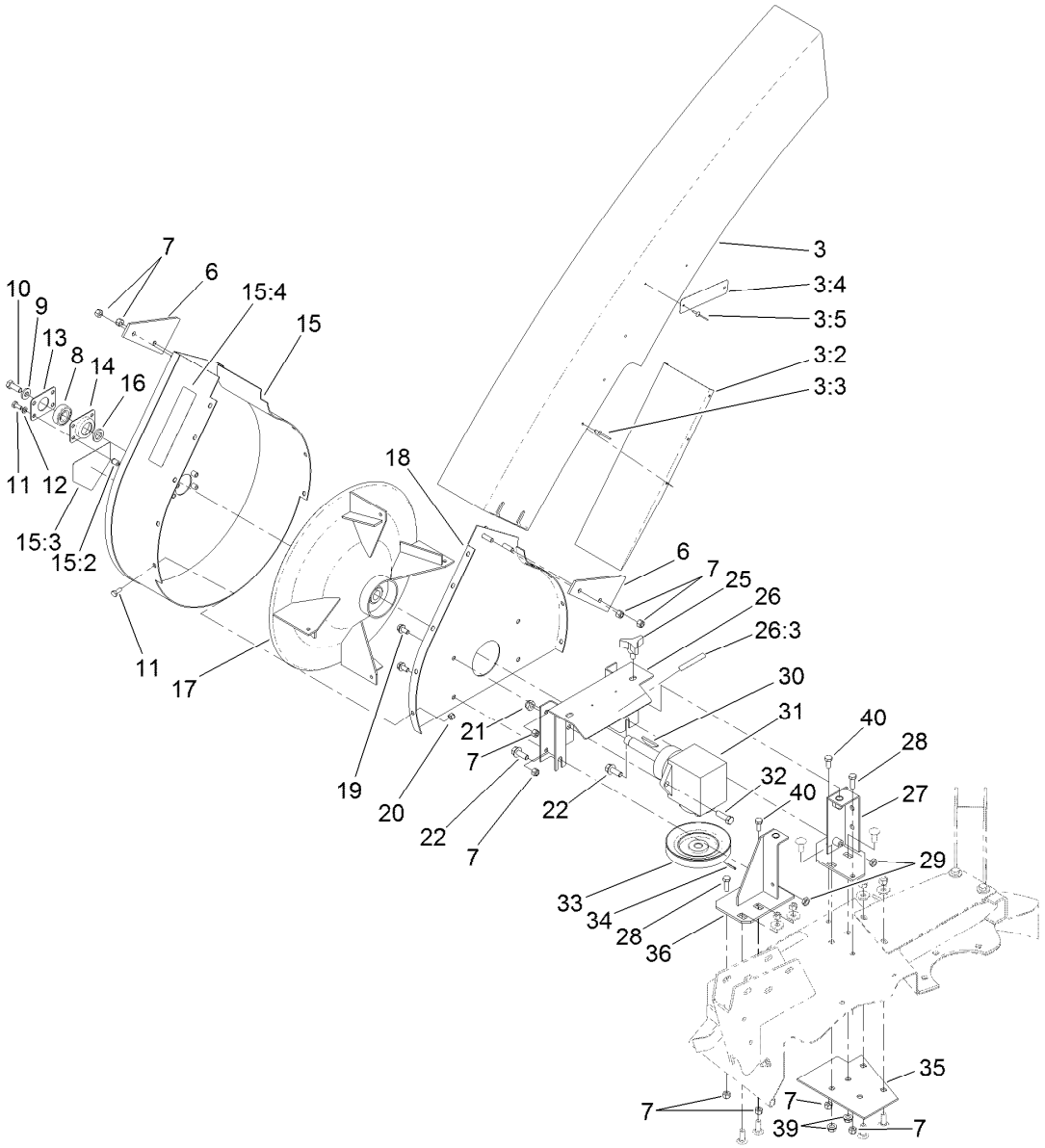

Blower Housing and Mount Assembly

Ref.	Part Number	Qty.	Description
3	80-3720	1	Chute ASM
3:2	77-6730-03	1	Deflector-Chute
3:3	3290-409	6	Rivet
3:4	107-2926	2	Decal-Plate, Warning
3:5	3290-271	4	Rivet-Pop
6	43-0960-03	2	Bracket-Chute
7	3296-29	11	Nut-Lock, NI
8	38-7820	1	Bearing-Ball
9	43-0940	1	Spacer
10	3235-22	1	Screw-HH, Lock
11	321-3	13	Screw-HH
12	3253-3	4	Washer-Lock
13	63-9700-03	1	Plate-Cover
14	37-6730	1	Cup-Bearing
15	13-0269	1	Blower Housing ASM
15:2	32117-2	4	Nut-Clinch
15:3	106-6753	1	Decal-Danger, CE
15:4	93-7301	1	Decal-Warning
16	63-9710	1	Spacer-Bearing
17	56-4780-03	1	Impeller ASM

Ref.	Part Number	Qty.	Description
18	77-5820-03	1	Mounting Plate ASM
19	3234-14	4	Screw-HHF
20	3296-42	9	Nut-Lock, NI
21	3296-44	2	Nut-Lock, NI
22	3234-11	2	Screw-HHF
25	62-6520	2	Knob
26	99-5187-03	1	Mount-Blower
26:3	133-8061	1	Decal-Warning
27	77-5560	1	Bracket-LH
28	322-5	2	Screw-HH
29	3218-3	2	Nut-Jam
30	3257-40	1	Key
31	53-4530-03	1	Gear Box ASM
32	323-7	2	Screw-HH
33	56-4810-03	1	Pulley ASM
34	32121-8	1	Pin-Roll, Slotted
35	99-5159-03	1	Plate-Reinforcement
36	99-5177	1	RH Bracket ASM
39	3290-357	4	Nut-HHF, Whiz
40	322-3	2	Screw-HH

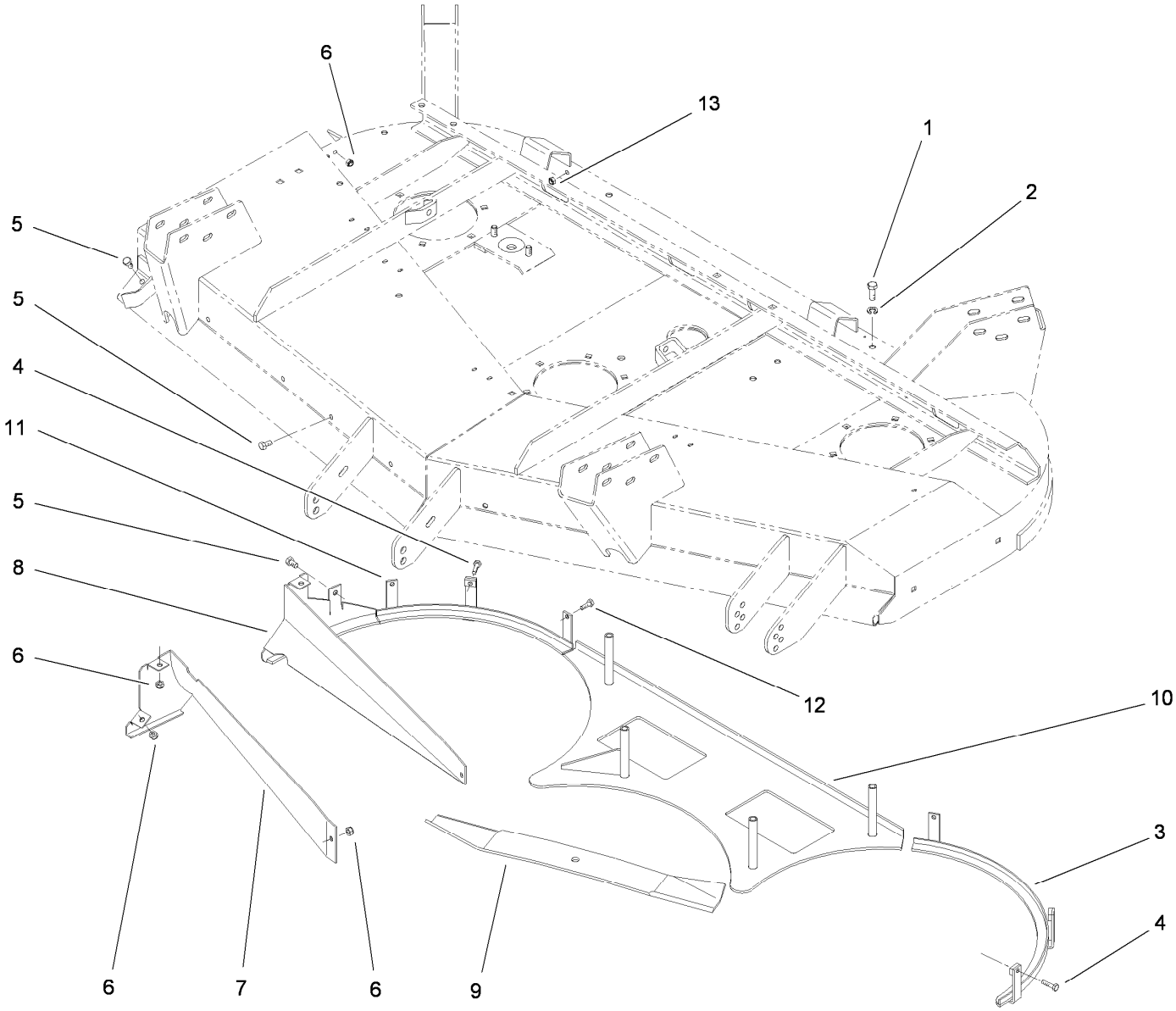

Shelf and Deflector Assembly

Ref.	*Part Number*	*Qty.*	*Description*
1	323-6	4	Screw-HH
2	3253-21	4	Washer-Lock
3	77-5930-01	1	LH Shelf ASM
4	321-6	3	Screw-HH
5	322-2	5	Screw-HH
6	3296-29	6	Nut-Lock, NI
7	77-5740-01	1	Deflector-Front ASM
8	77-5670-01	1	Deflector-Rear ASM
9	77-6710-03	3	Blade (21.5In)
10	77-5640-01	1	Rear Shelf ASM
11	77-5850-01	1	Shelf-Bottom, RH ASM
12	321-4	3	Screw-HH
13	3296-42	6	Nut-Lock, NI

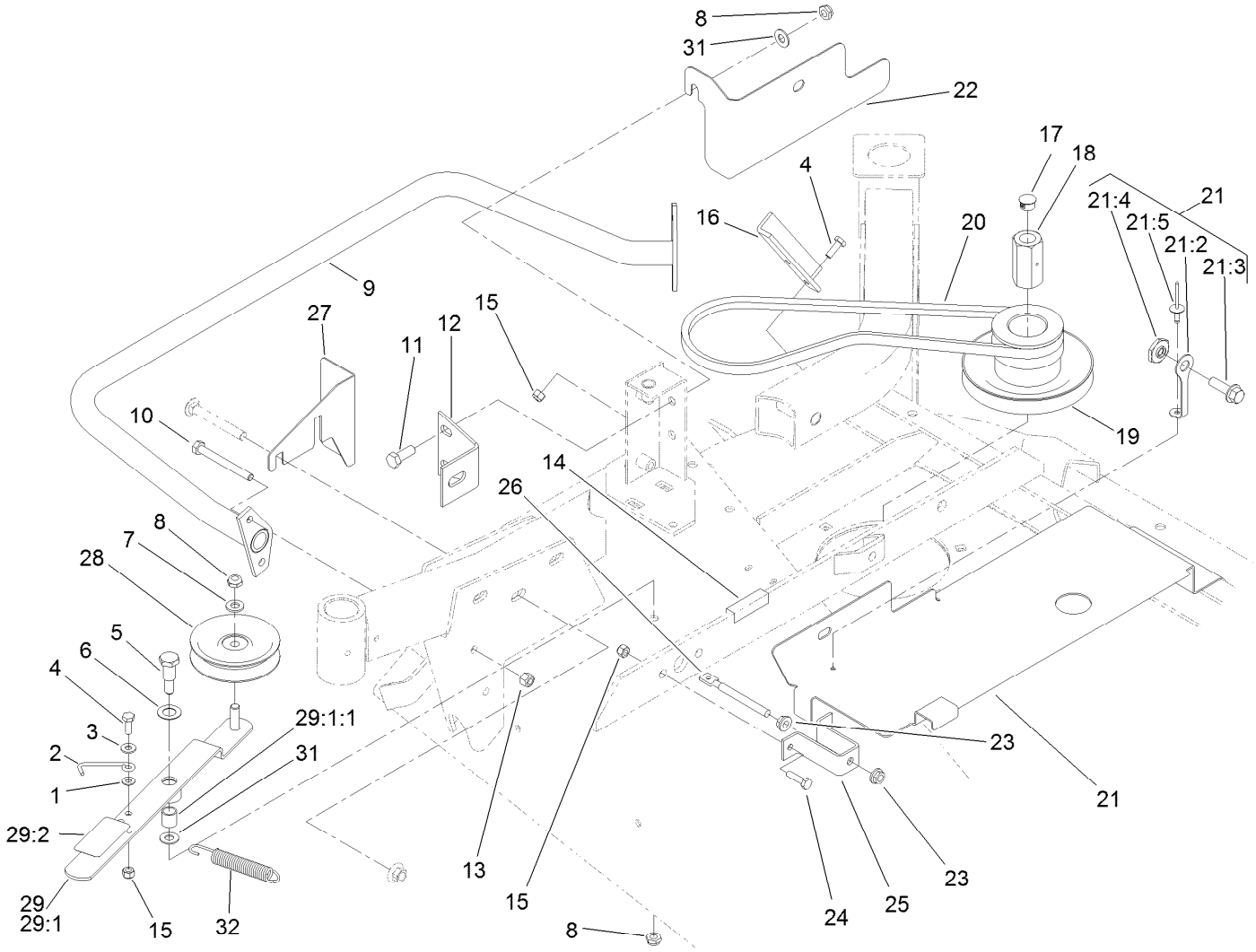

Pulley and Bumper Assembly

Ref.	Part Number	Qty.	Description
1	3290-451	1	Washer-Belleville
2	99-5183	1	Hook
3	3256-22	1	Washer-Flat
4	321-4	3	Screw-HH
5	80-3250	1	Screw-Pivot
6	257-10	1	Washer-Thrust
7	3256-38	1	Washer-Flat
8	3296-59	4	Nut-Lock, NI
9	99-5166-03	1	Bumper ASM
10	322-14	4	Screw-HH
11	323-6	2	Screw-HH
12	99-5176-03	1	Brace-Blower ASM
13	3296-29	4	Nut-Lock, NI
14	70-2040	1	Trim
15	3296-42	5	Nut-Lock, NI
16	80-3550-03	1	Stop-Deflector
17	59-5310	1	Nut-Cover
18	59-5190	1	Nut-Pulley
19	77-5420-03	1	Pulley ASM
20	80-3590	1	V-Belt
21	131-6106	1	Belt Cover ASM
21:2	117-8339	1	Lanyard-3 Inch
21:3	3234-24	1	Screw-HHF
21:4	117-8347	1	Nut-Shoulder
21:5	114439	1	Rivet-Blind
22	131-6089-03	1	Guard-Belt
23	32128-20	2	Nut-HF
24	321-6	2	Screw-HH
25	99-5165-01	1	Bracket-Spring
26	80-3560	1	Rod-Threaded
27	131-6091-03	1	Guard-Pulley
28	56-4920-01	1	Pulley-Idler
29	80-3310	1	Idler Arm ASM
29:1		1	Idler Arm/Bushing ASM ●
29:1:1	256-206	1	Bushing
29:2	93-6696	1	Decal-Warning
31	257-9	1	Washer-Thrust
32	37-8880	1	Spring-Traction

● Not serviced separately

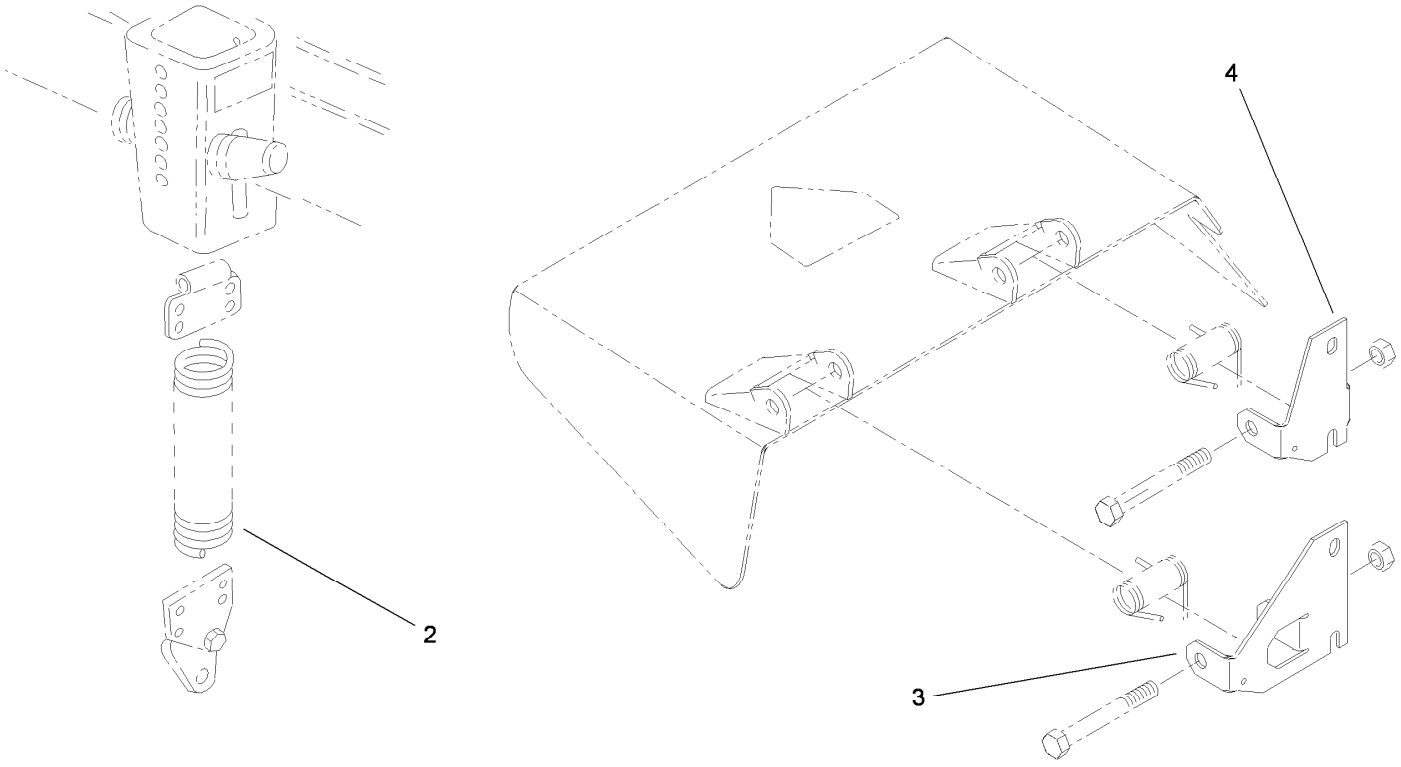

Counterbalance Spring, Front and Back Pivot Bracket Assembly

Ref.	*Part Number*	*Qty.*	*Description*
2	66-8390-03	1	Spring-Extension
3	80-2810-03	1	Bracket-Pivot, Front
4	80-2820-03	1	Bracket-Pivot, Rear



Count on it.