FORM NO. 3322-744

TORO®

Hitch Kit

Part No. 99–8925

INSTALLATION INSTRUCTIONS

Loose Parts

Note: Use the chart below to identify parts for assembly.

DESCRIPTION	QTY.	USE
Hitch	1	Install Hitch
Bolt	4	
Locknut	4	
Washer	4	

Installing Hitch

1. Disengage the power take off (PTO), set the parking brake, and turn the ignition key to "OFF" to stop the engine. Remove the key.
2. Install hitch to the rear of machine. Align holes and tighten locknuts, washers and bolts. Torque to 200 in–lbs (22.6 N–m) (Fig 1).

⚠ CAUTION

POTENTIAL HAZARD
- **Components around engine will be hot if the machine has been running.**

WHAT CAN HAPPEN
- **Touching hot components can cause burns.**

HOW TO AVOID THE HAZARD
- **Allow the machine to cool before performing maintenance.**
- **Do not touch engine components when hot.**

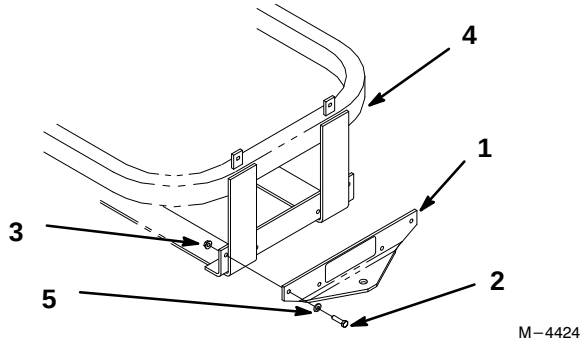

Figure 1

1. Hitch
2. Bolt
3. Locknut
4. Machine Frame
5. Washers

©The Toro Company – 1999
All Rights Reserved

Printed in USA