FORM NO. 3322–745

TORO®

PART NO. 99–8925

PARTS CATALOG

HITCH KIT

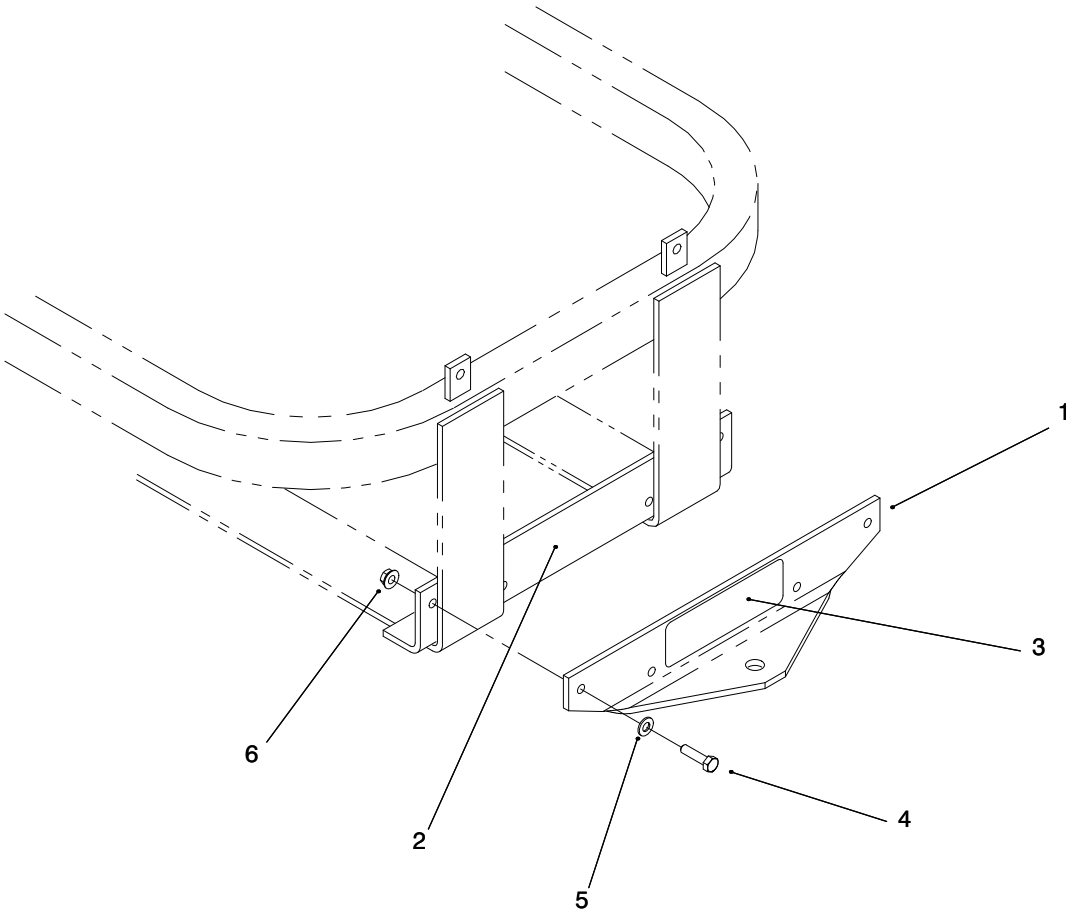

HITCH ASSEMBLY

Ref. No.	Part No.	Description	No. Used
1	E633666	Hitch	1
2	E633667	Hitch Bracket	1
3	E633668	Decal–Hitch	1
4	322–6	Screw–HH	4
5	E303334	Washer–Disc Spring	4
6	32128–20	Nut–Whizlock	4

© The TORO Company – 1999
All Rights Reserved

TPS