Form No. 3429-727 Rev A

TORO®

Count on it.

Operator's Manual

CM-658H-S and CM-958H-S Concrete Mixer

Model No. 68004C—Serial No. 404320000 and Up
Model No. 68006C—Serial No. 404320000 and Up

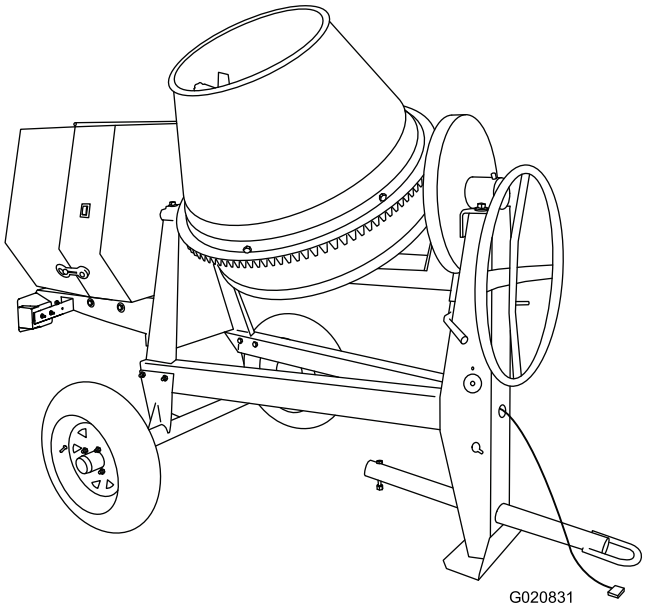

G020831

Register at www.Toro.com.
Original Instructions (EN)

3429-727 A

It is a violation of California Public Resource Code Section 4442 or 4443 to use or operate the engine on any forest-covered, brush-covered, or grass-covered land unless the engine is equipped with a spark arrester, as defined in Section 4442, maintained in effective working order or the engine is constructed, equipped, and maintained for the prevention of fire.

The enclosed engine owner's manual is supplied for information regarding the US Environmental Protection Agency (EPA) and the California Emission Control Regulation of emission systems, maintenance, and warranty. Replacements may be ordered through the engine manufacturer.

Tire Information—The DOT tire information is located on the side of each tire. This information gives load and speed ratings. Replacement tires should have the same or better ratings; refer to Specifications (page 15) to ensure that the tires on your machine meet or exceed the weight requirements of your machine.

⚠ WARNING

CALIFORNIA
Proposition 65 Warning

The engine exhaust from this product contains chemicals known to the State of California to cause cancer, birth defects, or other reproductive harm.

Use of this product may cause exposure to chemicals known to the State of California to cause cancer, birth defects, or other reproductive harm.

Introduction

This machine is designed to mix concrete, plaster, fireproofing material, grout, and other small-grained concrete products. You can tow the machine behind a vehicle equipped with a hitch appropriate for the type of tow pole your machine has (ball, pintle, or pin hitch).

Read this information carefully to learn how to operate and maintain your product properly and to avoid injury and product damage. You are responsible for operating the product properly and safely.

You may contact Toro directly at www.Toro.com for product safety and operation training materials, accessory information, help finding a dealer, or to register your product.

Whenever you need service, genuine Toro parts, or additional information, contact an Authorized Service Dealer or Toro Customer Service and have the model and serial numbers of your product ready. Figure 1 and Figure 2 identify the location of the model and serial numbers on the product. Write the numbers in the space provided.

Important: **With your mobile device, you can scan the QR code on the serial number decal (if equipped) to access warranty, parts, and other product information.**

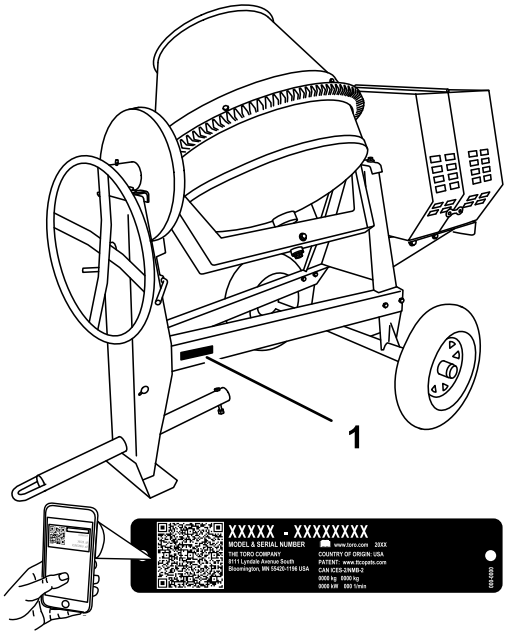

g241810

Figure 1
Models 68004C and 68006C

1. Model and serial number location

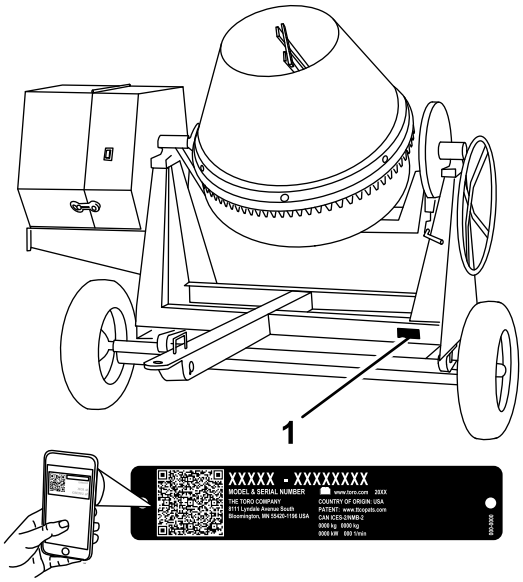

g241813

Figure 2
Models 68007C

1. Model and serial number location

© 2018—The Toro® Company
8111 Lyndale Avenue South
Bloomington, MN 55420

Contact us at www.Toro.com.
Printed in the USA
All Rights Reserved

Model No. _____

Serial No. _____

This manual identifies potential hazards and has safety messages identified by the safety-alert symbol (Figure 3), which signals a hazard that may cause serious injury or death if you do not follow the recommended precautions.



g000502

Figure 3
Safety-alert symbol

This manual uses 2 words to highlight information. **Important** calls attention to special mechanical information and **Note** emphasizes general information worthy of special attention.

Contents

Safety 4
Safe Operating Practices 4
Safety and Instructional Decals 7
Setup 10
1 Installing the Tow Pole 10
2 Installing the Tongue 10
3 Installing the Safety Chain 11
Product Overview 12
Controls 13
Engine Controls 13
Specifications 15
Attachments/Accessories 15
Operation 15
Towing the Machine 16
Preparing to Use the Machine 21
Lowering the Stabilizer Legs 21
Opening and Closing the Cowl 22
Adding Fuel 22
Performing Daily Maintenance 24
Starting the Engine 24
Shutting Off the Engine 25
Mixing the Material 25
Dumping the Material 26
Cleaning the Drum 27
Maintenance 28
Recommended Maintenance Schedule(s) 28
Pre-Maintenance Procedures 28
Preparing the Machine for Maintenance 28
Disconnecting the Spark-Plug Wire 29
Removing the Divider Plate 29
Installing the Divider Plate 29
Lubrication 30
Lubricating the Machine 30
Engine Maintenance 30
Servicing the Air Cleaner 30
Servicing the Engine Oil 31
Servicing the Spark Plug 33
Cleaning the Spark Arrester 34
Drive System Maintenance 35
Tire Air Pressure 35
Inspecting the Tires 35
Torquing the Wheel Lug Nuts 36
Belt Maintenance 36
Checking the Drive-Belt Tension 36
Adjusting the Drive-belt Tension 37
Replacing the Drive Belts 37
Replacing the Light Bulbs 38
Replacing the Rear-facing Side Bulbs 38
Replacing the Side-facing Bulbs 38
Replacing the Center Bulbs 39
Cleaning 39
Cleaning the Machine 39
Storage 40
Troubleshooting 41

Safety

Improper use or maintenance by the operator or owner can result in injury. To reduce the potential for injury, comply with these safety instructions and always pay attention to the safety-alert symbol (Figure 3), which means: **Caution**, **Warning**, or **Danger**—personal safety instruction. Failure to comply with the instruction may result in personal injury or death.

Safe Operating Practices

This product is capable of amputating hands. Always follow all safety instructions to avoid serious injury or death.

⚠ WARNING

Machining or handling stone, masonry, concrete, metal, and other materials can generate dust, mists, and fumes containing chemicals, such as silica, known to cause serious or fatal injury or illness, such as respiratory disease, silicosis, cancer, birth defects, or other reproductive harm.

- **Control dust, mist, and fumes at the source where possible. Use water for dust suppression whenever possible.**
- **Use good work practices and follow the recommendations of the manufacturer or suppliers, OSHA, and other occupational and trade associations.**
- **Always follow respiratory precautions.**
- **When you cannot eliminate the hazards from inhalation, you and all bystanders should wear a respirator approved by OSHA for the material that you are handling.**

⚠ WARNING

Engine exhaust contains carbon monoxide, which is lethal if inhaled.

Do not run the engine indoors or in an enclosed area.

Training

- Park the machine on a level surface, shut off the engine, wait for all moving parts to stop, and allow the machine to cool before adjusting, cleaning, storing, or repairing the machine.
- Read and understand the contents of this *Operator's Manual* before you start the engine. Ensure that everyone using this product knows how to use it and understands the warnings.
- Become familiar with the safe operation of the equipment, operator controls, and safety signs.
- All operators and mechanics should be trained. The owner is responsible for training them.
- Never let children or untrained people operate or service the equipment. Local regulations may restrict the age of the operator.
- The owner/user can prevent and is responsible for accidents or injuries to people or damage to property.

Towing

- Check with your local county or state towing safety regulations before towing the machine.
- To reduce the possibility of an accident while transporting the machine on public roads, ensure that the towing vehicle is mechanically sound and in good operating condition.
- Shut off the engine and turn the fuel valve to the off position before transporting the machine.
- When towing with a ball hitch, ensure that it is the proper size for the hitch coupler on the machine.
- When towing with a pintle hitch, ensure that the eye of the tow pole is the correct dimension for the pintle hook.
- Inspect the hitch and coupling for wear. Do not tow the machine with damaged or worn hitches, couplings, chains, or other components.
- Check the air pressure of the tires on the towing vehicle and adjust the pressure as needed.
- Check the tire tread and sidewall for damage and wear and replace the tire if necessary.
- Properly attach the safety chains to the towing vehicle by crossing the chains and removing any extra slack.
- Ensure that the directional and brake lights are working properly (if equipped).
- Ensure that the directional, backup, and brake lights of the tow vehicle are working properly (if equipped).
- Before towing, ensure that your machine is correctly and securely attached to the towing vehicle.
- Ensure that the safety chains are properly secured to the vehicle, and leave enough slack for turning.

- Do not carry any material in the machine when towing.
- Avoid sudden stops and starts. This can cause skidding or jackknifing. Smooth, gradual starts and stops improves towing.
- Avoid sharp turns to prevent rolling. Tow only with a vehicle that has a hitch designed for towing. Do not attach towed equipment except at the hitch point.
- Do not tow the machine faster than 88 km/h (55 mph).
- Use caution when backing up; use a spotter outside the vehicle to guide you.
- Do not allow anyone to sit or ride on the machine.
- Disconnect the machine from the tow vehicle before using it.
- Place chocks underneath the tires to prevent them from rolling while the machine is parked.

Preparation

Become familiar with the safe operation of the equipment, operator controls, and safety signs.

- Use only accessories and attachments approved by the manufacturer.
- Wear personal protective equipment and appropriate clothing including:
  - Hard hat
  - Respirator or dust mask
  - Face shield
  - Safety glasses
  - Hearing protection
  - Safety shoes
  - Long pants
  - Shirt with long sleeves that are tight at the wrists
  - Tight-fitting gloves without drawstrings or loose cuffs
- Wear appropriate clothing, including eye protection; long pants; substantial, slip-resistant footwear; and hearing protection. Tie back long hair and do not wear loose jewelry.
- Ensure that the machine is on a level surface before operating it.
- Chock the tires of the machine to prevent unintended movement.
- Before every use, do the following:
  - Inspect the coupler, ball, and hitch.
  - Ensure that all lights are functioning properly (if equipped).
  - Ensure that the tires are properly inflated.
  - Ensure that the lug nuts are tight and torqued properly.
  - Ensure that the machine is properly secured.

Fuel Safety

- Use extreme care in handling fuel. It is flammable and its vapors are explosive.
- Extinguish all cigarettes, cigars, pipes, and other sources of ignition.
- Use only an approved fuel container.
- Do not remove the fuel cap or fill the fuel tank while the engine is running or hot.
- Do not add or drain fuel in an enclosed space.
- Do not store the machine or fuel container where there is an open flame, spark, or pilot light, such as on a water heater or other appliance.
- If you spill fuel, do not attempt to start the engine; avoid creating any source of ignition until the fuel vapors have dissipated.

Operation

- Use your full attention while operating the machine. Do not engage in any activity that causes distractions; otherwise, injury or property damage may occur.
- Do not run an engine in an enclosed or poorly ventilated area.
- Operate the machine only in good lighting conditions.
- Before starting the machine, ensure that there are no people or obstacles near or under the machine.
- Shut off the engine before leaving the machine for any reason.

  Never leave a running machine unattended. Always shut off the engine and verify that all moving parts have stopped.
- Chock the tires of the machine or keep it attached to the towing vehicle when it is not in use.
- Keep your hands away from any moving parts. Keep your feet away from the tires and the front post.
- Do not operate the machine under the influence of alcohol or drugs.
- Do not place your hands or any solid object into the drum when the machine is in operation.
- Do not touch parts that may be hot from operation. Allow them to cool before attempting to maintain, adjust, or service the machine.
- Never move the machine while the engine is running.
- Keep the cowl closed and latched during operation.

- Ensure that all the guards and shields are securely in place before operating the machine.
- If the mixing paddles strike an object or if the machine starts making an unusual noise or vibration, shut off the engine, wait for all moving parts to stop, and empty the drum. Inspect for clogging or damage. Clean, repair, and/or replace any damaged parts.
- Do not change the engine governor setting or overspeed the engine.
- Do not operate the machine when there is the risk of lightning.

Maintenance and Storage

- Before performing maintenance, do the following:
  - Park the machine on a level surface.
  - Shut off the engine, disconnect the spark-plug wire, and wait for all movement to stop before adjusting, cleaning, or repairing the machine.
  - Let the engine cool before performing maintenance or storing the machine.
  - Disengage all power and operation controls.
- Never lubricate, service, repair, or adjust the machine with the engine running.
- Keep equipment materials clear from the muffler and engine to prevent fires. Clean up oil or fuel spills.
- Never allow untrained personnel to service the machine.
- Keep your hands, feet, and clothing away from moving parts. If possible, do not make adjustments with the engine running.
- Keep all parts in good working condition and all fasteners tightened. Replace all worn or damaged decals.
- Remove any buildup of grease, oil, or debris from the machine.
- Shut off the engine and inspect the machine if an object enters the drum or causes another obstruction. Make all necessary repairs before starting the machine.
- Do not tamper with safety devices.
- Chock the tires when storing the machine.
- Keep all fasteners and hose clamps securely tightened and all equipment in good condition.
- Use only genuine Toro replacement parts.

Safety and Instructional Decals

Safety decals and instructions are easily visible to the operator and are located near any area of potential danger. Replace any decal that is damaged or missing.



decal125-4939

125-4939

1. Warning—read the *Operator's Manual*.
2. Hand and arm entanglement at the belt drive; crushing hazard of hand; entanglement hazard of hand at the shaft—keep your hands away from moving parts; keep all guards and shields in place.
3. Entanglement hazard at paddles—shut off the engine and wait for all moving parts to stop before performing maintenance.
4. Toxic gas inhalation hazard—Do not run the engine in an enclosed space.
5. Explosion hazard—shut off the engine and keep away from flames when refueling.

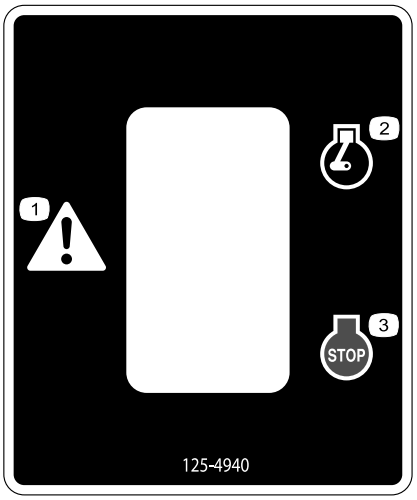

decal125-4940

125-4940

1. Warning
2. Engine—run
3. Engine—shut off

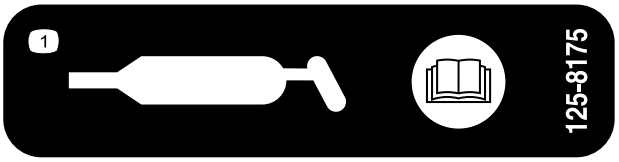

decal125-8175

125-8175

1. Read the *Operator's Manual* for information on greasing the machine.

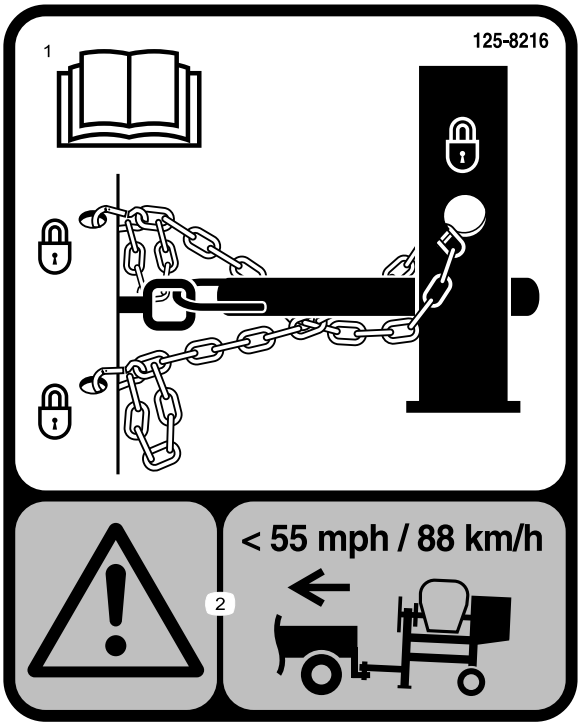

decal125-8216

125-8216

1. Read the *Operator's Manual* for information on how to tow the machine.
2. Warning—limit towing speed to less than 88 km/h (55 mph).

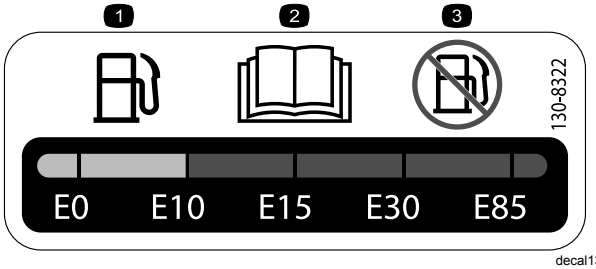

decal130-8322

130-8322

1. Use only fuel with an alcohol content by volume under 10%.
2. Read the *Operator's Manual* for more information on fuel.
3. Do not use fuel with an alcohol content by volume greater than 10%.

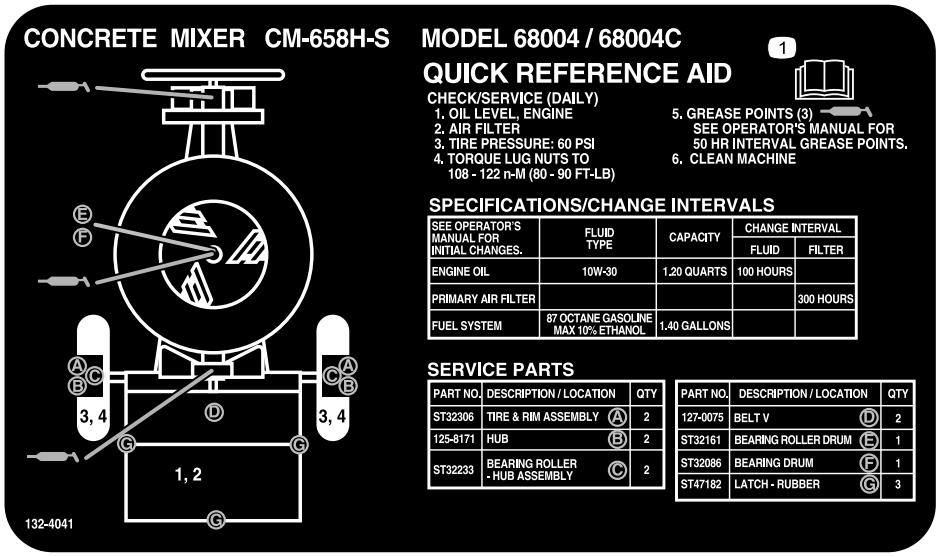

decal132-4041

132-4041

1. Read the *Operator's Manual* for more information on servicing the machine.

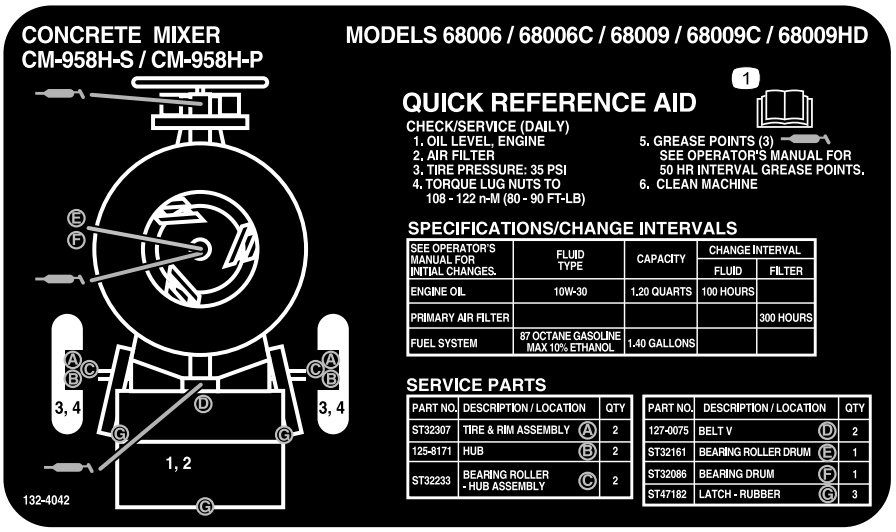

decal132-4042

132-4042

1. Read the *Operator's Manual* for more information on servicing the machine.



decal133-8062

133-8062

Setup

1

Installing the Tow Pole

Side-Dump Models Only

Parts needed for this procedure:

1	Tow pole kit (sold separately)

Tow Pole Specifications

Purchase the tow pole kit (including fasteners) that meets your needs from your Authorized Service Dealer. The machine has the following tow pole options:

Hitch Type	Length
50 mm (2 inch) ball—stamped	78.7 cm (31 inches) or 127 cm (50 inches)
50 mm (2 inch) ball—forged	78.7 cm (31 inches) or 127 cm (50 inches)
Pintle	78.7 cm (31 inches) or 127 cm (50 inches)

Installing the Tow Pole

1. Remove the bolt and nut from the tow pole (Figure 4).

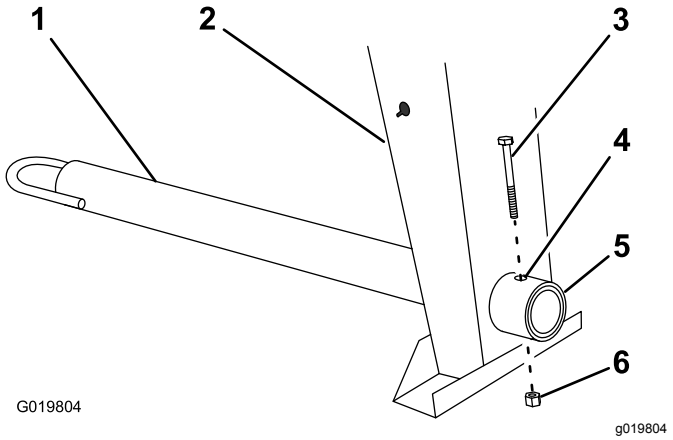

Figure 4

1. Tow pole
2. Front post
3. Bolt
4. Bolt hole
5. Frame fitting
6. Nut

2. Slide the tow pole forward and align the hole in the pole with the hole in the frame fitting (Figure 4).
3. Insert the bolt through the holes in the fitting and the pole (Figure 4).
4. Thread the nut onto the bolt and tighten them until they are tight against the frame fitting (Figure 4).

   Note: If the self-locking nylon insert in the locknut wears with use, replace the nut with a new Grade 5 or Grade 8 locknut.

2

Installing the Tongue

End-Dump Models Only

Parts needed for this procedure:

1	Tongue
1	Front stabilizer leg
6	Short bolt
1	Long bolt
7	Nut

Procedure

1. Lower the rear stabilizer legs; refer to Lowering the Stabilizer Legs (page 21).
2. Place jack stands under the front frame rail to prevent the machine from tipping forward (Figure 5).

⚠ WARNING

Mechanical or hydraulic jacks may fail to support the machine and cause serious injury.

Use jack stands when supporting the machine.

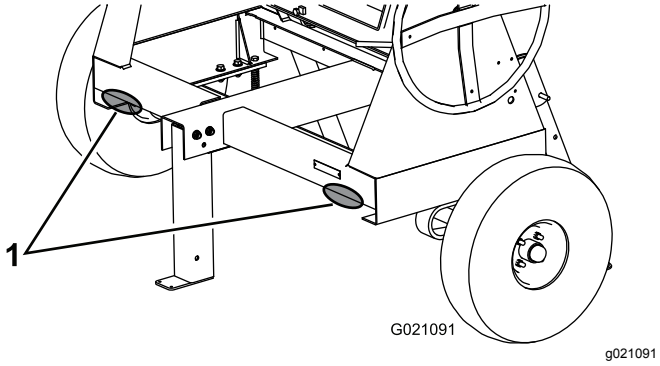

Figure 5

1. Support points

3. Remove the 2 nuts and bolts that secure the front stabilizer leg to the frame (Figure 6) and remove the front stabilizer leg.

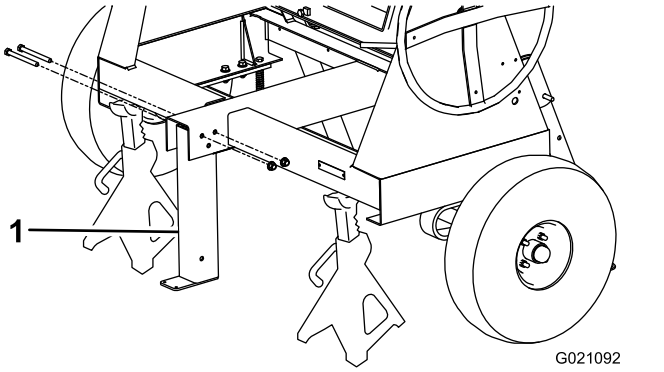

Figure 6

1. Front stabilizer leg

4. Install the tongue into the opening at the front of the machine and secure it with 6 nuts and short bolts torqued to 102 N·m (75 ft-lb); refer to Figure 7.

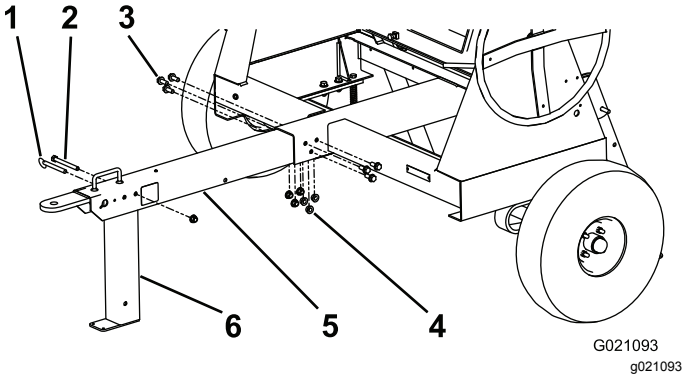

Figure 7

1. Clevis pin
2. Long bolt
3. Short bolt
4. Nut
5. Tongue
6. Front stabilizer leg

5. Align the top rear hole in the front stabilizer leg to the hole past the handle in the front of the tongue (Figure 7).
6. Install the long bolt through the holes and secure it with a nut torqued to 102 N·m (75 ft-lb); refer to Figure 7.

   Note: The stabilizer leg pivots rearward on the bolt. If you install the bolt into the wrong hole, the stabilizer leg will not work properly.
7. Insert the clevis pin to lock the front stabilizer leg in position (Figure 7).

3

Installing the Safety Chain

Parts needed for this procedure:

1	Safety chain
2	Connecting link

Procedure

Form a hook on the end of a bendable piece of rod or stiff wire (not included) and install the safety chain and connecting links as shown in Figure 8 or Figure 9.

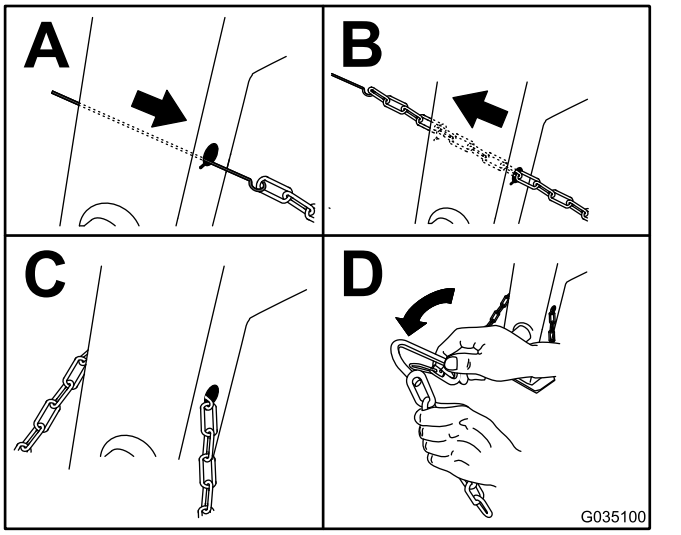

Figure 8
Side-Dump Models

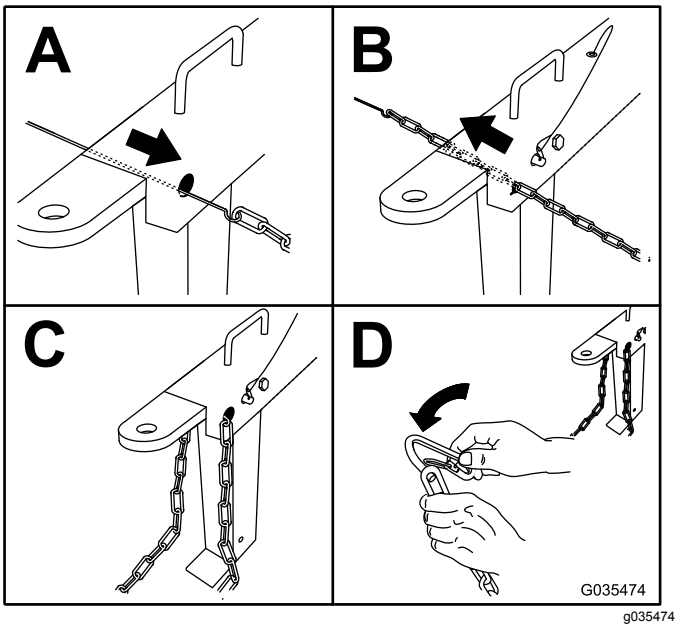

Figure 9
End-Dump Models

Note: Ensure that approximately equal lengths of safety chain extend from either side of the front post.

Product Overview

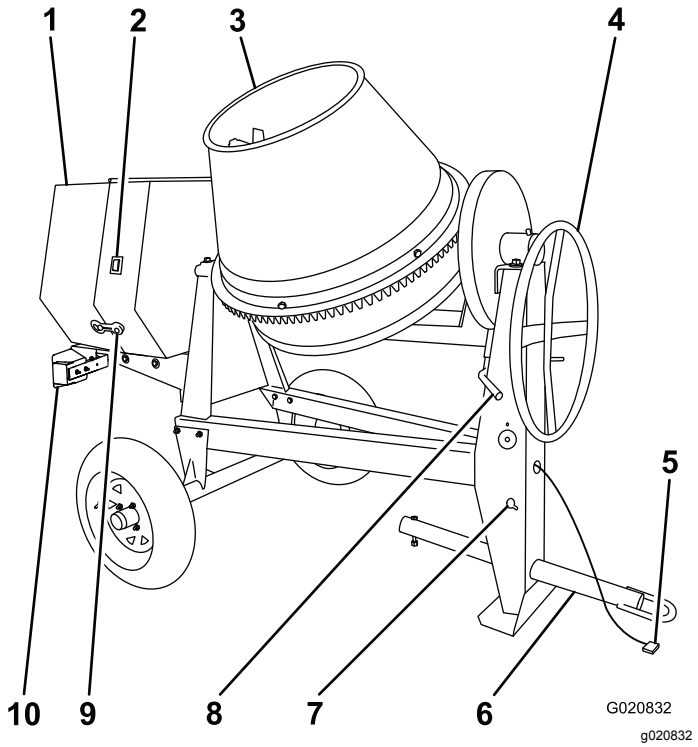

Figure 10
Models 68004C, 68006C, and 68009C

1. Engine cowl
2. Engine switch
3. Drum
4. Handwheel
5. Lighting wire harness
6. Tow pole
7. Safety-chain keyholes
8. Drum-tilt brake
9. Rubber latch
10. Trailer light (2)

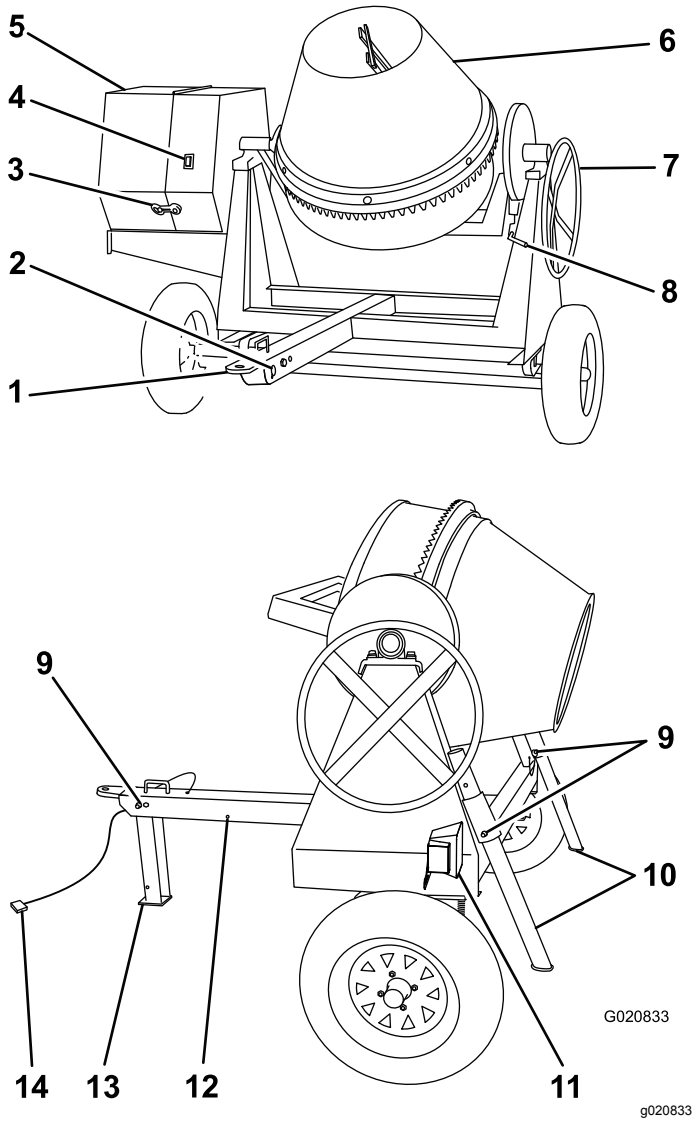

Figure 11

Models 68007C and 68008C

1.	Tongue-mounted tow coupler	8.	Drum-tilt brake
2.	Safety-chain keyholes	9.	Clevis pin
3.	Rubber latch	10.	Rear stabilizer legs
4.	Engine switch	11.	Trailer light (2)
5.	Engine cowl	12.	Rearward pin hole
6.	Drum	13.	Front stabilizer leg
7.	Handwheel	14.	Lighting wire harness

Controls

Become familiar with all the controls before you start the engine and operate the machine.

Engine Switch

When the engine switch on the cowl is in the RUN position, it allows the engine to run. Moving the engine switch to the STOP position shuts off the engine.

Engine Controls

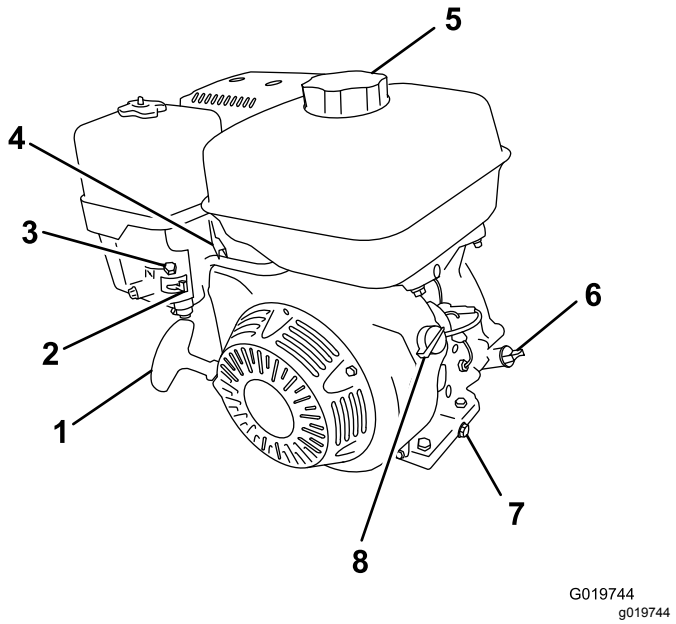

Figure 12

1.	Recoil-start handle	5.	Fuel cap
2.	Fuel valve	6.	Oil dipstick
3.	Choke lever	7.	Oil-drain plug
4.	Throttle lever	8.	On/Off switch

Fuel Valve

The fuel valve (Figure 13) is located underneath the choke lever. Move the lever for the fuel valve to the ON position before attempting to start the engine. When you have finished mixing, shut off the engine and move the fuel-valve lever to the OFF position.

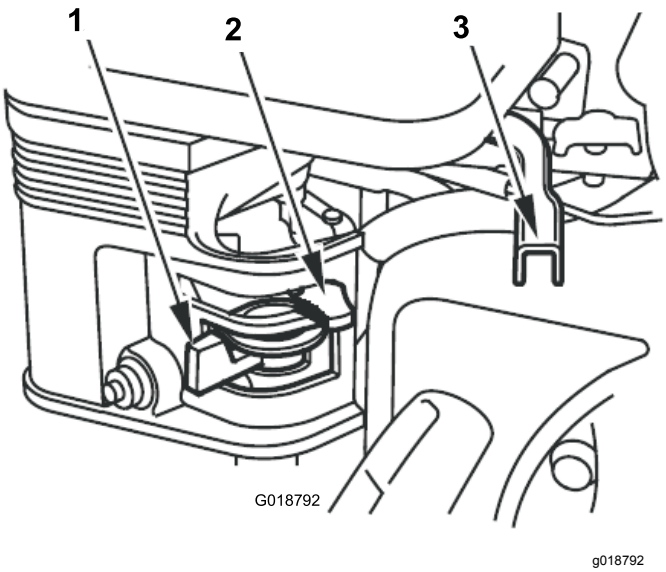

Figure 13

1. Fuel valve
2. Choke lever
3. Throttle lever

Choke Lever

Use the choke lever (Figure 13) to start a cold engine. Before pulling the recoil-start handle, move the choke lever to the CLOSED position. Once the engine is running, move the choke lever to the OPEN position. Do not use the choke if the engine is already warmed up or if the air temperature is high.

Throttle Lever

The throttle lever (Figure 13) controls the speed (rpm) of the engine. It is located next to the choke lever. It sets the engine speed and therefore can increase and decrease the rotation speed of the mixing paddles. For best performance, set this control to the FAST position when mixing material.

Engine On/Off Switch

The On/Off switch is located on the front of the engine.

- Rotate it to the ON position to start and run the engine.
- Rotate it to the OFF position to shut off the engine.

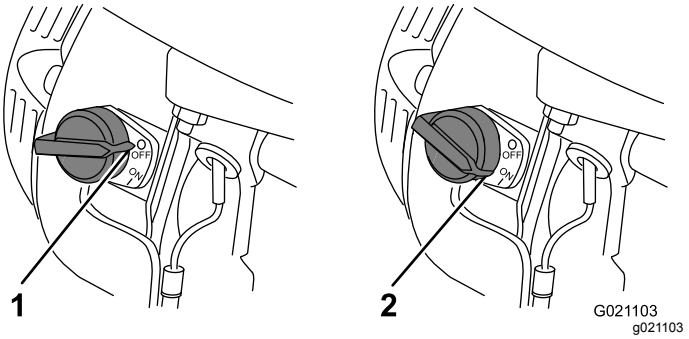

Figure 14

1. OFF position
2. ON position

Recoil-Start Handle

To start the engine, pull the recoil-start handle (Figure 12) quickly to turn the engine over. The engine controls described above must all be set correctly for the engine to start.

Oil-Level Switch

The oil-level switch is located inside the engine, and it does not allow the engine to run when the oil level is below the safe operating limit.

Handwheel

The handwheel controls the tilt of the drum.

Drum-tilt Brake

The drum-tilt brake locks the drum into an upright position or a discharging position.

Specifications

Note: Specifications and design are subject to change without notice.

Model	68004	68006	68007	68008	68009
Batch Capacity	0.17 m^3 (6.0 ft^3)	0.255 m^3 (9.0 ft^3)	0.255 m^3 (9.0 ft^3)	0.255 m^3 (9.0 ft^3)	0.255 m^3 (9.0 ft^3)
Total Volume	0.255 m^3 (9.0 ft^3)	0.43 m^3 (15.1 ft^3)	0.43 m^3 (15.1 ft^3)	0.43 m^3 (15.1 ft^3)	0.43 m^3 (15.1 ft^3)
Drum Material	Steel	Steel	Steel	Polyethylene	Polyethylene
Length	198 cm (78 inches)	213 cm (84 inches)	216 cm (85 inches)	216 cm (85 inches)	213 cm (84 inches)
Width	117 cm (46 inches)	142 cm (56 inches)	216 cm (85 inches)	216 cm (85 inches)	142 cm (56 inches)
Height	147 cm (58 inches)	165 cm (65 inches)	180 cm (71 inches)	180 cm (71 inches)	165 cm (65 inches)
Weight	313 kg (690 lb)	363 kg (800 lb)	397 kg (875 lb)	397 kg (875 lb)	381 kg (837 lb)

Attachments/Accessories

A selection of Toro approved attachments and accessories is available for use with the machine to enhance and expand its capabilities. Contact your Authorized Service Dealer or authorized Toro distributor or go to www.Toro.com for a list of all approved attachments and accessories.

To ensure optimum performance and continued safety certification of the machine, use only genuine Toro replacement parts and accessories. Replacement parts and accessories made by other manufacturers could be dangerous, and such use could void the product warranty.

Operation

Important: **Before operating, check the fuel and oil levels, and remove debris from the machine. Ensure that the area is clear of people.**

⚠ CAUTION

This machine produces sound levels that can cause hearing loss through extended periods of exposure.

Wear hearing protection when operating this machine.

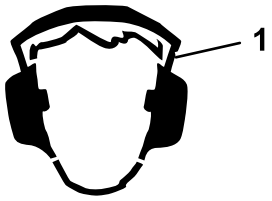

g232186

Figure 15

1. Wear hearing protection.

Towing the Machine

Before towing the machine, read all the information and perform all the applicable procedures to in this section to ensure safe and proper towing.

⚠ WARNING

Towing the machine at high speed increases the risk of a hitch malfunction and tire failure. Higher speeds also increase the momentum of the machine and braking distance. If the machine detaches from the tow vehicle at high speed, it could cause damage to property, or injury or death to bystanders.

Do not exceed 88 km/h (55 mph) when towing the machine. For poor road conditions or inclement weather, reduce speed accordingly.

⚠ WARNING

Towing the machine with material in the drum increases the risk of a hitch malfunction and tire failure. In addition, material could bounce out of the drum and hit other vehicles and/or people. Material in the drum increases the weight, which affects momentum and braking distance.

Do not tow the machine with material in the drum.

- Review and understand the Safe Operating Practices (page 4).
- Test the brakes of the tow vehicle before towing.
- Avoid sudden starts and stops while towing the machine.

Tow Vehicle Requirements

Before connecting the machine to your tow vehicle, ensure that your vehicle is prepared as follows:

- Ensure that your tow vehicle has towing capacity for the weight of the machine; refer to Specifications (page 15).
- Use a Class 2 or larger receiver.
- Ensure that your tow vehicle has the appropriate hitch to tow the machine; options include a 50 mm (2 inch) ball hitch or a pintle hitch.
- If the machine is equipped with a trailer-light kit, ensure that the electrical connector of the tow vehicle is compatible with the electrical connector of the machine. The machine uses a standard 4-pin, flat plug. If your tow vehicle has a different type of plug, obtain an adapter from an automotive parts store before towing.

Preparing the Machine for Towing

1. Shut-off the engine and fuel valve.
2. Empty the drum.
3. Using the handwheel, position the drum so that it is pointing down toward the ground (Figure 16).

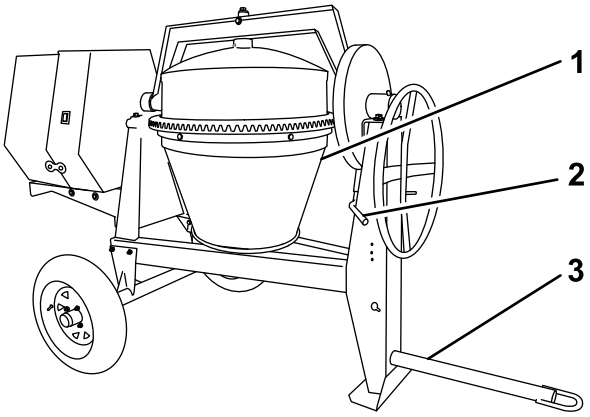

Figure 16

1. Drum pointing down
2. Drum-tilt brake engaged
3. Tow pole bolted in place

4. Lock the drum into position by pushing down the drum-tilt-brake handle (Figure 17).

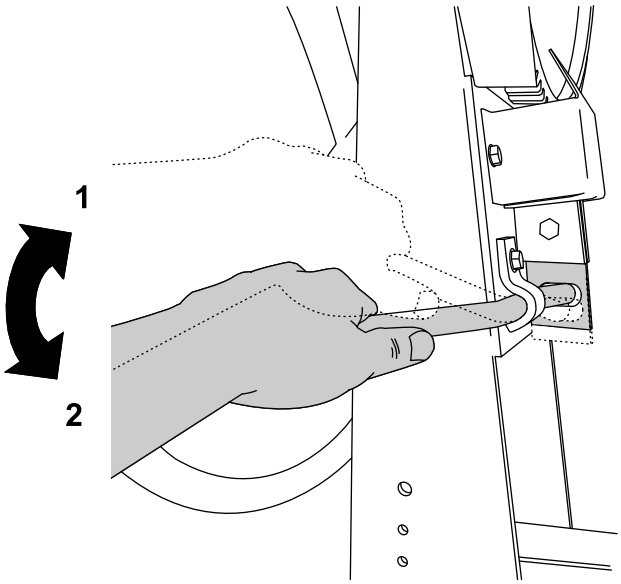

Figure 17

Drum-Tilt Brake

1. Unlocked position
2. Locked position

5. Close the engine cowl and secure the cowl latches (Figure 18).

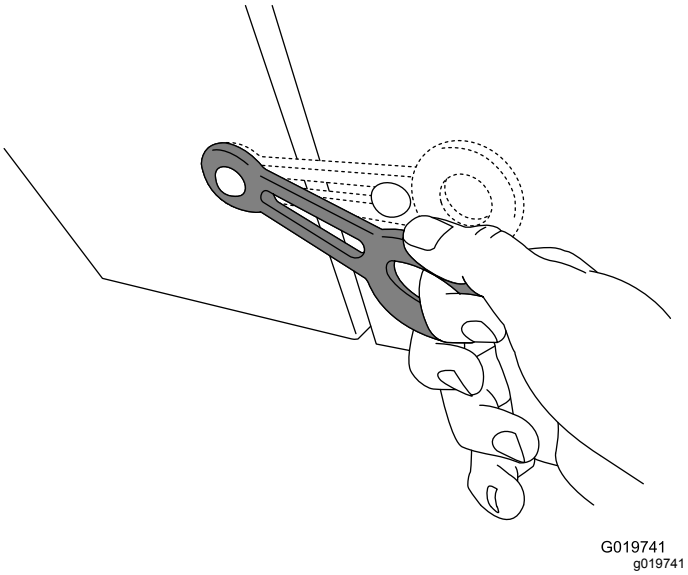

Figure 18

6. Inspect the tires; refer to Inspecting the Tires (page 35).

Raising the Stabilizer Legs

End-Dump Models Only

End-dump models have a front stabilizer leg and 2 rear stabilizer legs.

Raise the stabilizer legs before towing the machine.

1. Adjust the machine so that there is no weight resting on the rear stabilizer legs.
2. Pull the clevis pin out from 1 of the rear stabilizer legs and the bracket (Figure 19).

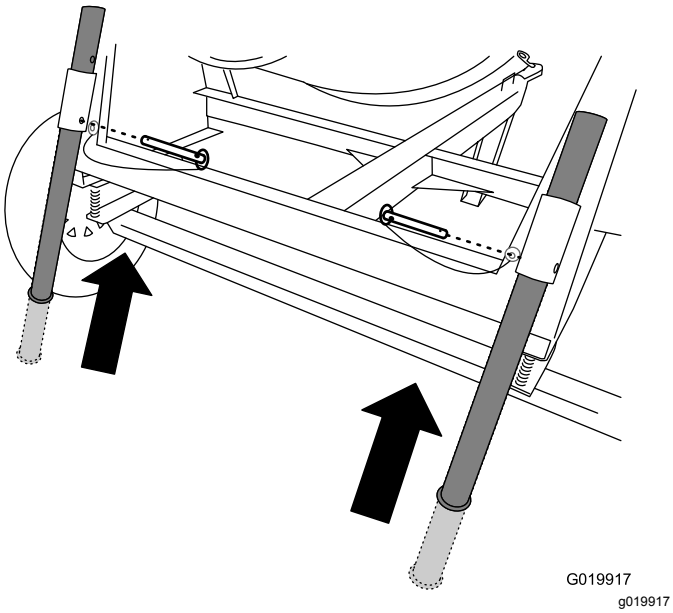

Figure 19

3. Slide the stabilizer leg up in the bracket and align the pin hole of the bracket with the lower hole in the stabilizer leg (Figure 19).
4. Push the clevis pin through the hole in the bracket and the stabilizer leg (Figure 19).
5. Repeat steps 1 through 4 for the other rear stabilizer leg.
6. Lift upward on the tongue so that there is no weight resting on the front stabilizer leg.
7. Pull the clevis pin out from the front stabilizer leg and the tongue (Figure 20).

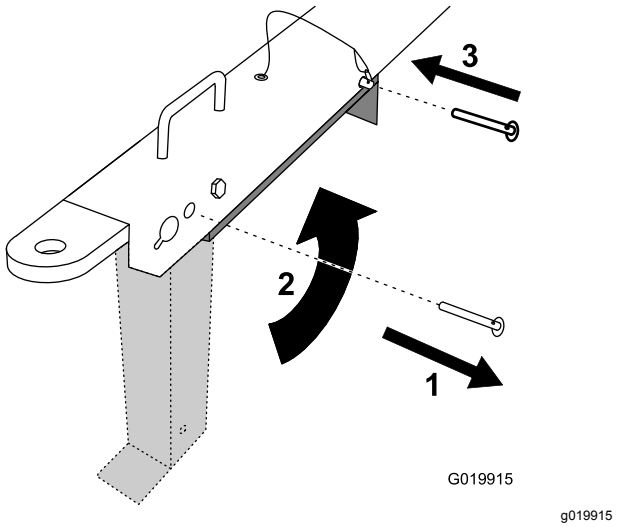

Figure 20

1. Remove the clevis pin.
2. Rotate the stabilizer leg up.
3. Install the clevis pin.

8. Rotate the front stabilizer leg up into the tongue (Figure 20).
9. Push the clevis pin through the rearward hole in the tongue and the front stabilizer leg (Figure 20).

Hitching the Machine to a Tow Vehicle

Your machine is equipped with 1 of the following hitch types; hitch it as described in the appropriate procedure:

- Stamped-ball coupler— Hitching a Stamped-Ball Coupler (page 18)
- Forged-ball coupler— Hitching a Forged-Ball Coupler (page 18)
- Pintle-hitch coupler— Hitching a Pintle-Hitch Coupler (page 19)
- Pin-hitch coupler— Hitching a Pin-Hitch Coupler (page 19)

Hitching a Stamped-Ball Coupler

1. Apply chassis grease to the socket of the coupler and the area of the clamp that contacts the ball.
2. Oil the pivot points and sliding surfaces of the coupler with SAE 30 engine oil.
3. Hitch the machine as shown in Figure 21.

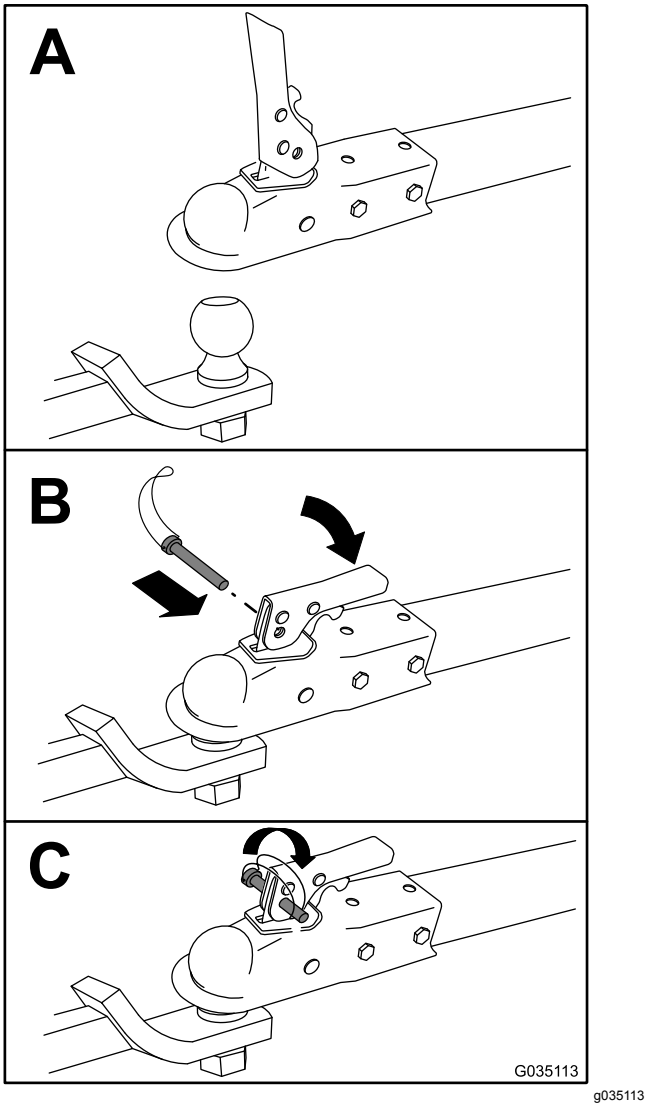

g035113

Figure 21

Hitching a Forged-Ball Coupler

1. Apply removable thread-locking compound to the threads of the coupler bolt to prevent the coupler handle from coming loose.

   Important: **Apply thread-locking compound as needed in the future.**
2. Apply chassis grease to the socket of the coupler and the area of the clamp that contacts the ball.
3. Hitch the machine as shown in Figure 22.

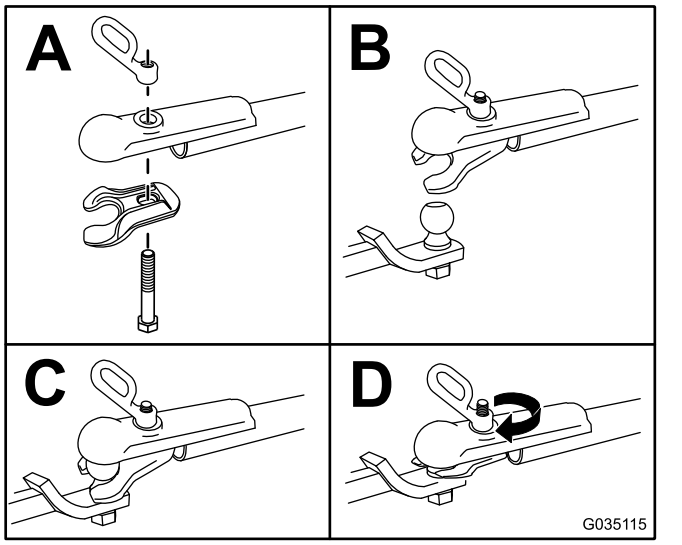

g035115

Figure 22

Note: Use a wrench to keep the bolt from spinning.

Hitching a Pintle-Hitch Coupler

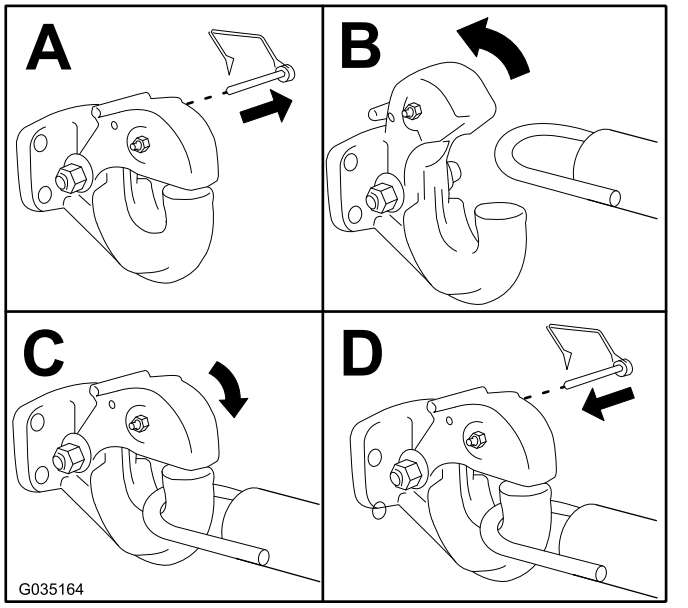

g035164

Figure 23

Hitching a Pin-Hitch Coupler

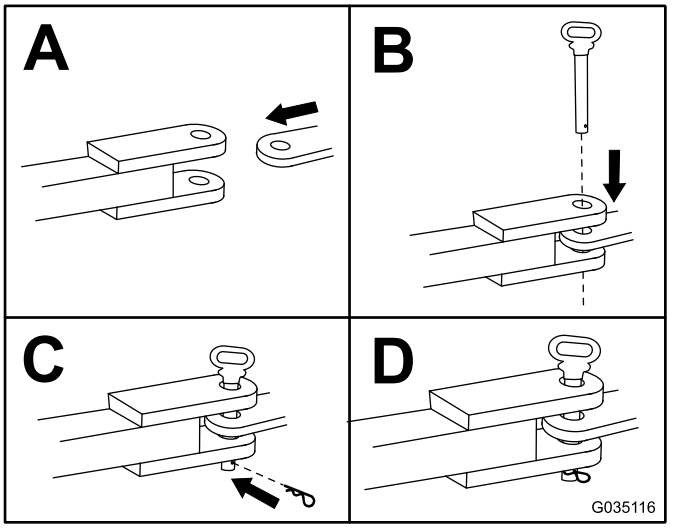

g035116

Figure 24

Note: Use a 19 mm (3/4 inch) or 22 mm (7/8 inch) hitch pin.

Connecting the Safety Chains to the Tow Vehicle

1. Pull the safety chain through the slots in the keyholes, so that the lengths on each side are equal.
2. Cross both lengths of chain **under** the tow pole (under the tongue for end-dump models). For side-dump models, refer to Figure 25. For end-dump models, refer to Figure 26.

   Note: Crossing the chains decreases the chances of the front of the machine dropping to the ground if the hitch does not hold the connection.

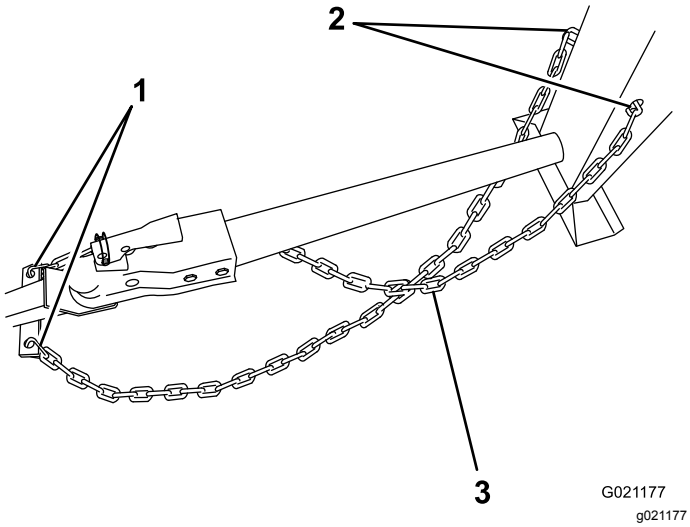

Figure 25

Side-Dump Models

1. Connecting links
2. Keyholes in front post
3. Chain crossed under tow pole

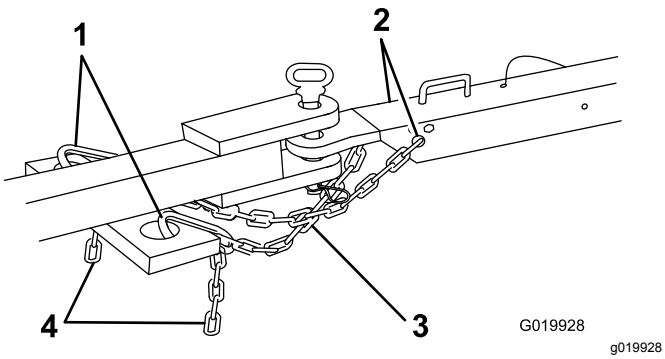

Figure 26

End-Dump Models

1. Connecting links
2. Keyholes
3. Chain crossed under tongue
4. Chain

3. Connect each length of chain to the safety chain mounting point on the tow vehicle with the connecting links (Figure 27).

   Important: **Ensure that the chain has enough slack for turning around corners when towing the machine.**

   Note: For side-dump models, stow the excess chain inside the bottom of the front post by pushing it into the keyholes and latching the appropriate links into the keyhole slots.

   Note: For end-dump models, connect the connecting links to the appropriate links in the safety chain (Figure 27). If the excess chain hangs too low and touches the ground, connect it again to the connecting link to raise it away from the ground.

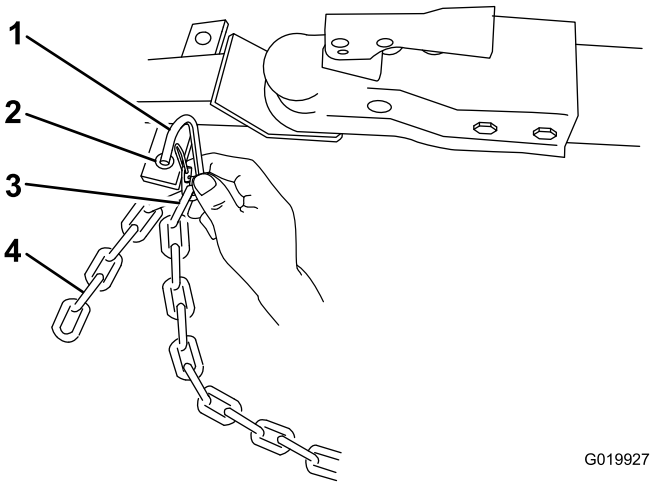

Figure 27

1. Connecting link
2. Safety chain mounting point on tow vehicle
3. Chain link
4. Chain

Connecting and Checking the Lights

Machines Equipped with a Light Kit Only

1. Connect the electrical plug of the machine with the electrical plug of the tow vehicle (Figure 28).

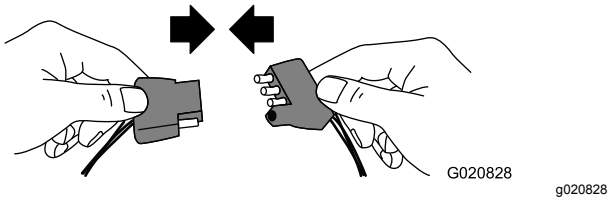

Figure 28

   Note: The machine uses a standard 4-pin, flat plug. If your tow vehicle has a different type of plug, obtain an adapter from an automotive parts store before towing.

2. Ensure that the tow vehicle is in the NEUTRAL position, engage the parking brake, and start the engine.
3. Test the lights as follows:
   A. Turn on the headlights of the tow vehicle.

      The tail lights of the machine should illuminate.

   B. Press the brake pedal of the tow vehicle.

      The brake lights of the machine should illuminate.

C. Operate each turn signal of the tow vehicle in turn.

   The corresponding turn-signal lights of the machine should illuminate.

Preparing to Use the Machine

1. Park the machine on a level surface and disconnect the machine from the tow vehicle.
2. Ensure that all guards and paddles are in place and in good condition.
3. Perform all daily maintenance procedures prescribed in Performing Daily Maintenance (page 24).
4. Chock the front and back of the tires to prevent the machine from moving.
5. For end-dump models, lower the front and rear stabilizer legs; refer to Lowering the Stabilizer Legs (page 21).
6. Move the drum to the upright position and lock it.

Lowering the Stabilizer Legs

End-Dump Models Only

End-dump models have a front stabilizer leg and 2 rear stabilizer legs to keep the machine from tipping forward or backward during operation. Move the stabilizer legs into the lowered position before operating the machine.

1. Pull the clevis pin out from 1 stabilizer leg and the bracket (Figure 29).

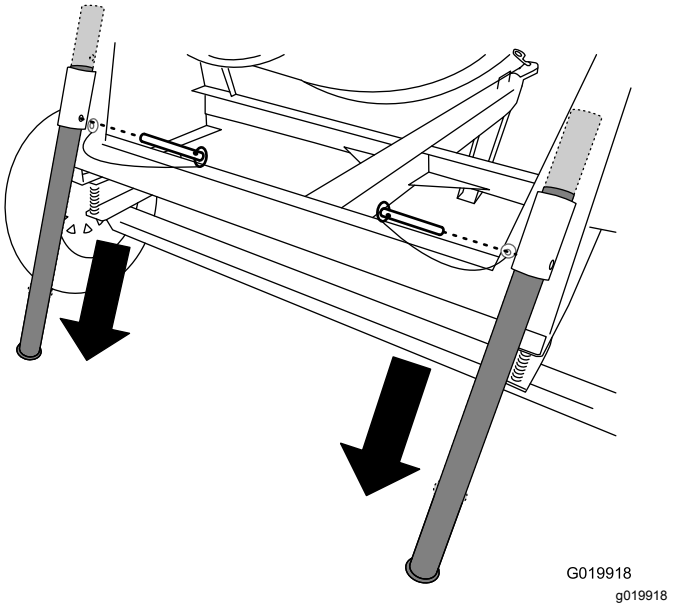

Figure 29

2. Slide the stabilizer leg down in the bracket and align the pin hole of the bracket with the upper hole in the stabilizer leg (Figure 29).
3. Push the clevis pin through the hole in the bracket and the stabilizer leg (Figure 29).
4. Repeat steps 1 through 3 for the other rear stabilizer leg.
5. Lift upward on the tongue to provide clearance for the front stabilizer leg.
6. Pull the clevis pin out from the front stabilizer leg and the tongue (Figure 30).

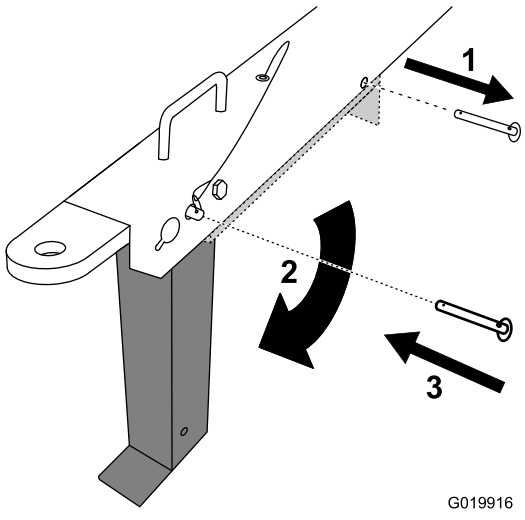

Figure 30

1. Remove the clevis pin.
2. Rotate the stabilizer leg down.
3. Install the clevis pin.

7. Rotate the front stabilizer leg down toward the ground (Figure 30).

8. Push the clevis pin through the front hole in the tongue and the front stabilizer leg (Figure 30) and carefully lower the machine to the ground.

Opening and Closing the Cowl

Opening the Cowl

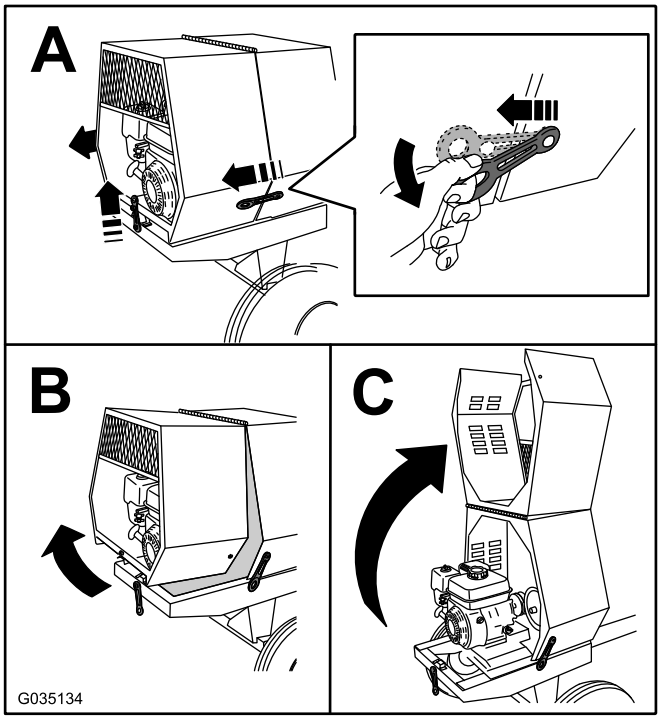

g035134

Figure 31

Closing the Cowl

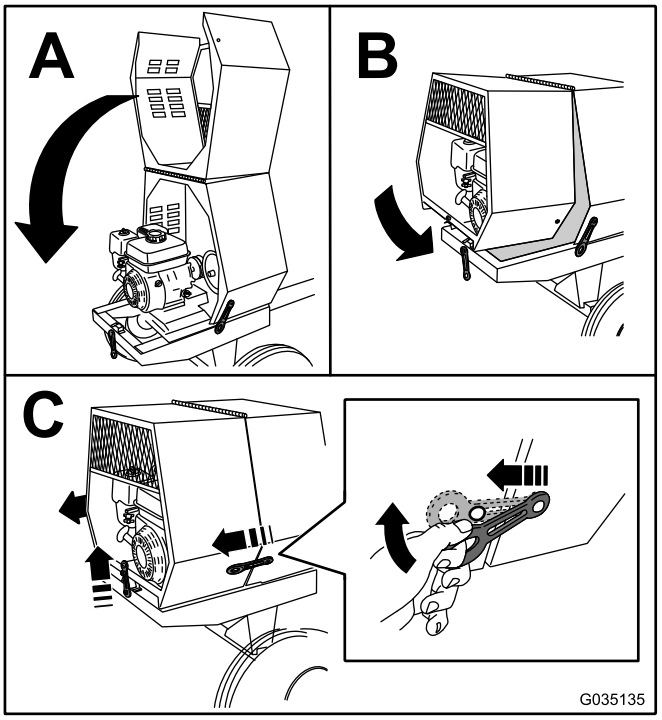

g035135

Figure 32

Adding Fuel

⚠ DANGER

In certain conditions, fuel is extremely flammable and highly explosive. A fire or explosion from fuel can burn you and others and can damage property.

- **Fill the fuel tanks outdoors, in an open area, when the engine is cold. Wipe up any fuel that spills.**
- **Never fill the fuel tanks inside an enclosed trailer.**
- **Never smoke when handling fuel and stay away from an open flame or where fuel fumes may be ignited by a spark.**
- **Store fuel in an approved container and keep it out of the reach of children. Never buy more than a 30-day supply of fuel.**
- **Do not operate without entire exhaust system in place and in proper working condition.**

⚠ DANGER

In certain conditions during fueling, static electricity can be released, causing a spark that can ignite the fuel vapors. A fire or explosion from fuel can burn you and others and can damage property.

- **Always place fuel containers on the ground away from your vehicle before filling.**
- **Do not fill fuel containers inside a vehicle or on a truck or trailer bed, because interior carpets or plastic truck bed liners may insulate the container and slow the loss of any static charge.**
- **When practical, remove equipment from the truck or trailer and refuel the equipment with its wheels on the ground.**
- **If this is not possible, then refuel such equipment on a truck or trailer from a portable container rather than from a fuel-dispenser nozzle.**
- **If you must use a fuel-dispenser nozzle, keep the nozzle in contact with the rim of the fuel tank or container opening at all times until fueling is complete.**

⚠ WARNING

Fuel is harmful or fatal if swallowed. Long-term exposure to vapors can cause serious injury and illness.

- **Avoid prolonged breathing of vapors.**
- **Keep your face away from the nozzle and fuel tank opening.**
- **Keep fuel away from your eyes and skin.**

Fuel Recommendations

- For best results, use only clean, fresh (less than 30 days old), unleaded gasoline with an octane rating of 87 or higher ((R+M)/2 rating method).
- **Ethanol**: Gasoline with up to 10% ethanol (gasohol) or 15% MTBE (methyl tertiary butyl ether) by volume is acceptable. Ethanol and MTBE are not the same. Gasoline with 15% ethanol (E15) by volume is not approved for use. **Never use gasoline that contains more than 10% ethanol by volume**, such as E15 (contains 15% ethanol), E20 (contains 20% ethanol), or E85 (contains up to 85% ethanol). Using unapproved gasoline may cause performance problems and/or engine damage which may not be covered under warranty.
- **Do not** use gasoline containing methanol.
- **Do not** store fuel either in the fuel tank or in fuel containers over the winter unless you use a fuel stabilizer.
- **Do not** add oil to gasoline.

Important: **To reduce starting problems, add fuel stabilizer to the fuel all season, mixing it with fuel less than 30 days old; run the machine dry before storing it for more than 30 days.**

Do not use fuel additives other than a fuel stabilizer/conditioner. Do not use a fuel stabilizer with an alcohol base such as ethanol, methanol, or isopropanol.

Fuel Tank Capacity

5.3 L (1.4 US gallons)

Filling the Fuel Tank

1. Park the machine on a level surface, shut off the engine, and allow the engine to cool.
2. Clean around the fuel cap and remove it (Figure 33).

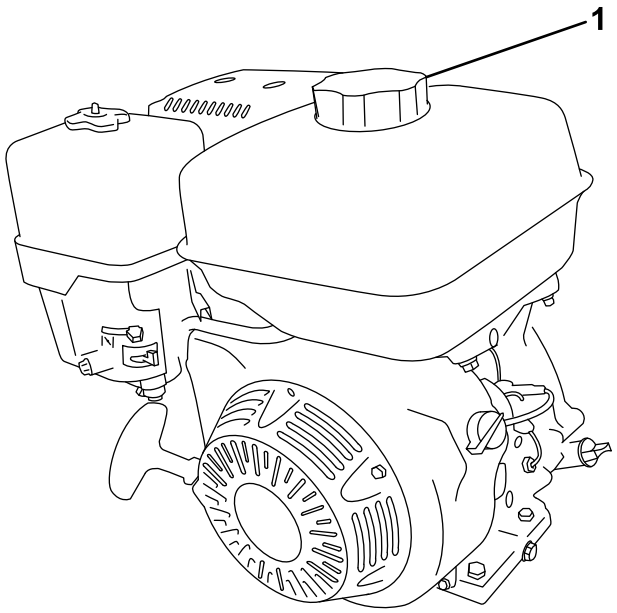

Figure 33

1. Fuel cap

3. Add fuel to the fuel tank until the level is at the maximum fuel level (Figure 34).

   Important: **This space in the tank allows fuel to expand. Do not fill the fuel tank completely full.**

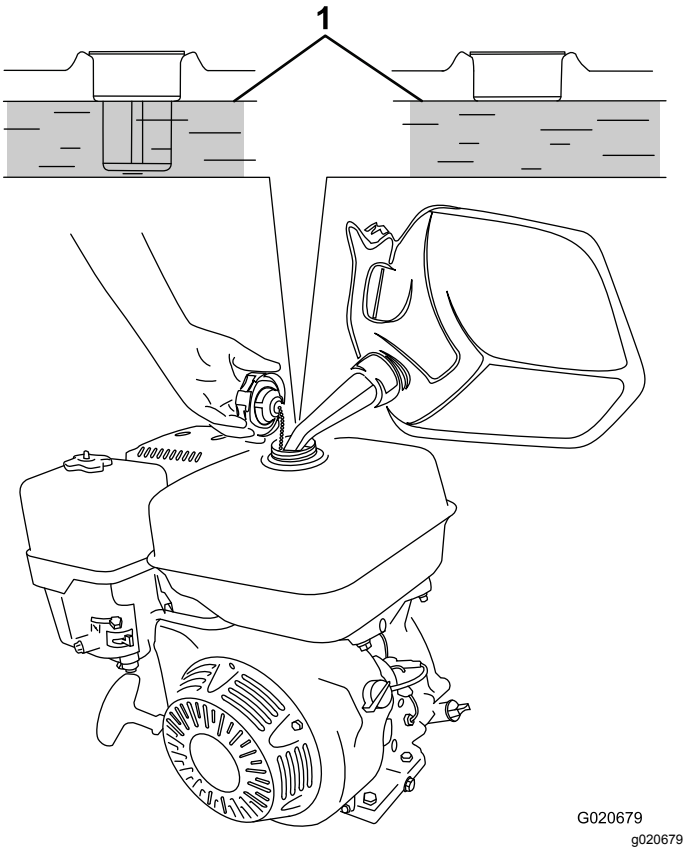

Figure 34

1. Maximum fuel level

4. Install the fuel cap securely (Figure 33).
5. Wipe up any spilled fuel.

Performing Daily Maintenance

Before starting the machine each day, perform the Each Use/Daily procedures listed in Maintenance (page 28).

Starting the Engine

1. Ensure that the clutch lever is in the OFF position.
2. Move the fuel valve to the OPEN position, all the way to the right (Figure 35).

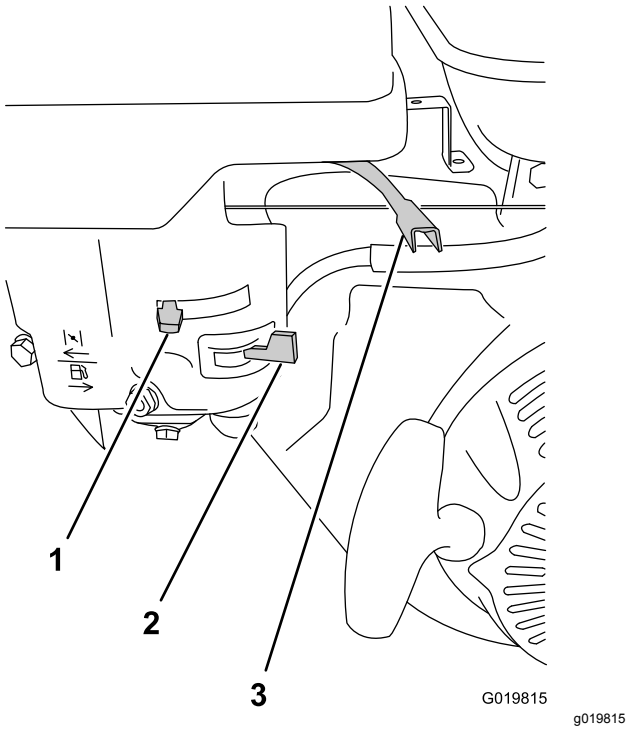

Figure 35

1. Choke lever
2. Fuel valve
3. Throttle lever

3. Move the choke lever to the ON position (Figure 35).

   Note: A warm or hot engine may not require choking.
4. Move the throttle lever 1/3 of the way toward the MAX position.
5. Move the engine switch to the ON position (Figure 36).

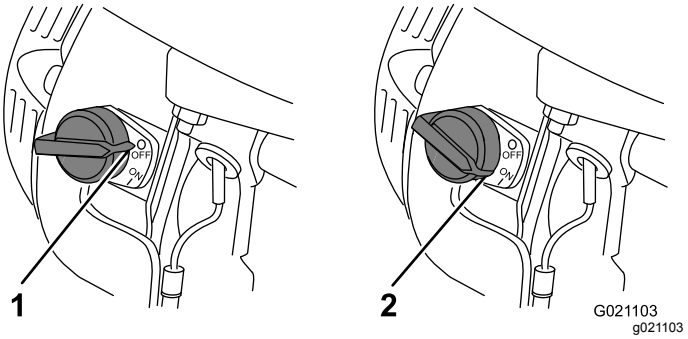

Figure 36

1. Engine switch—OFF position
2. Engine switch—ON position

6. Pull the starter handle lightly until you feel resistance, then pull the handle briskly (Figure 37). Return the starter handle gently.

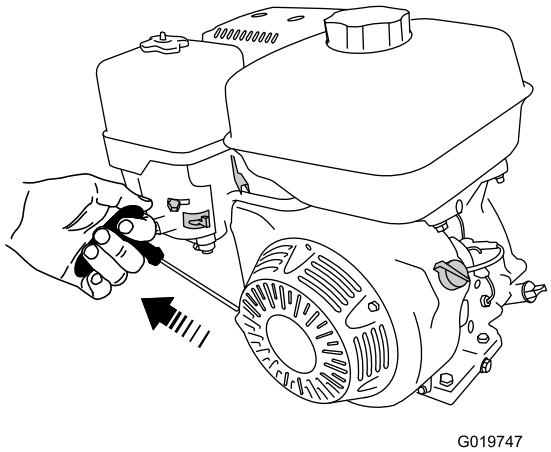

Figure 37

7. After the engine starts, gradually move the choke lever back to the OFF position. If the engine stalls or hesitates, move the choke back to the ON position again until the engine warms up. Then move it to the OFF position.

Shutting Off the Engine

In an emergency, shut off the engine quickly by pressing the Emergency Shutoff switch located on the cowl, holding it until the engine and moving parts have stopped.

1. Move the throttle lever to the MIN position (Figure 35).

   Note: If the engine has been working hard or is hot, let it idle for a minute before shutting off the engine. This helps to cool the engine before shutting it off. In an emergency, shut off the engine immediately.

2. Move the engine switch to the OFF position.
3. Move the fuel valve to the CLOSED position, all the way to the left.

Mixing the Material

Concrete Basics

⚠ DANGER

Eye and skin contact with concrete materials and breathing the dust involved is hazardous to your health.

- **Ensure that there is adequate air ventilation.**
- **Wear a dust mask to prevent inhalation of dust while using the machine; refer to Safe Operating Practices (page 4).**
- **Avoid direct contact of cement and concrete materials with skin and eyes.**

Note: Follow the manufacturer's instructions that are printed on the packaging of the product that you are using.

Concrete has the following 4 basic ingredients:

- Sand
- Gravel
- Portland cement
- Water

Depending on the application, you can use different ratios of these 4 ingredients. The typical ratio for mixing concrete is 1 part Portland cement, 2 parts sand, and 3 parts gravel.

There are many variations of concrete mix recipes, depending on the application. It is important to use the appropriate quantity of water. Using too little water results in dry areas in the mix, but using too much water results in weaker concrete. The amount of water needed varies depending on moisture content of the sand and gravel. The mix should have a thickness similar to peanut butter.

Keep the poured concrete damp for several days to obtain proper curing. Evaporation results in weaker concrete. Concrete cures through hydration, a reaction between water and cement.

Preparing to Mix

⚠ DANGER

This machine is capable of amputating hands.

- **Keep all bystanders a safe distance away from the machine.**
- **Stop the machine immediately if any people or animals enter the work area.**
- **Never place any part of your body into a position that causes an unsafe operating condition.**

1. Read all the recommendations from Safe Operating Practices (page 4) before using the machine.
2. Ensure that the machine is on level ground and the surrounding area is clear of obstacles.
3. Remove the machine from the tow vehicle.
4. Secure the machine from movement.
5. Use the handwheel to move the drum into an upright, slightly tilted position to allow access for pouring materials into the drum.

   Note: This position also allows the mixing paddles to mix the materials more effectively.
6. Push the drum-tilt brake down to lock the drum into position and avoid accidentally dumping the material.
7. Start the engine. Allow the engine to warm up at idle for 2 minutes; refer to Starting the Engine (page 24).

   Important: **If you need to shut off the machine quickly, use the engine switch/speed-control handle (as equipped) located on the cowl; refer to Engine Switch (page 13).**
8. Use the engine throttle lever/speed-control handle (as equipped), to control the speed of the engine and drum.
9. Close the engine cowl.

Mixing Concrete

Important: **Do not add more material than the batch capacity for your specific machine model; refer to Specifications (page 15).**

1. Ensure that the tilt brake is fully engaged and that the drum is operating at full speed.
2. Pour water into the drum.
3. Add the concrete ingredients as follows:
   - If you are using pre-mixed concrete, add the required amount of dry pre-mix.
   - If you are mixing sand, gravel, and cement, add them as follows:
     A. Add the required amount of gravel.

        Note: Adding water and gravel before cement and sand allows the mix left in the drum from the previous batch to be tumbled off the drum and paddles and into the next batch.

     B. Add the required amount of Portland cement.

     C. Add the required amount of sand.
4. Allow the drum to turn while the mix reaches the appropriate consistency.

Dumping the Material

Note: When dumping a batch of material, leave the engine running so that the rotating drum helps dump the material.

1. Align a wheelbarrow or similar container of adequate capacity in the path of the drum opening.
2. While the drum is turning, firmly grasp the handwheel with 1 hand.
3. Using your other hand, pull upward on the drum-tilt-brake handle to release the brake.
4. Use both hands to slowly turn the handwheel, allowing the drum to tilt in the desired direction and dump the desired amount of material.
5. Turn the handwheel in the opposite direction to return the drum into an upright position.
6. Push down on the drum-tilt brake to lock the drum into position, avoiding accidental discharging of concrete mix.
7. After dumping a batch of material, clean the drum to prevent dried material from contaminating the next batch of material; refer to Cleaning the Drum (page 27).

Cleaning the Drum

Important: **Do not strike on the drum with a shovel, hammer, or any other device to loosen any accumulated dried materials.**

1. While the machine is running, use the handwheel to tilt the drum slightly.
2. Engage the drum-tilt brake to prevent the drum from tilting further and discharging the water.
3. As the drum is rotating, spray it thoroughly with water before the material dries.
4. Allow the drum to rotate and tumble the loose material and water, further loosening the rest of the material.
5. Continue to spray the drum with water to remove all material from the drum and mixing paddles.
6. When you have removed all material from the surfaces of the drum and mixing paddles, disengage the drum-tilt brake and use the handwheel to tilt the drum and dump the water from it.
7. If some material still remains in the drum, spray the drum with water while it is tilted downward, allowing the water and material to run out.

Maintenance

⚠ WARNING

Failure to properly maintain the machine could result in premature failure of machine systems causing possible harm to you or bystanders.

Keep the machine well maintained and in good working order as indicated in these instructions.

Important: **Refer to your engine owner's manual for additional maintenance procedures.**

Recommended Maintenance Schedule(s)

Maintenance Service Interval	Maintenance Procedure
After the first 25 hours	• Change the engine oil.
Before each use or daily	• Inspect the air-cleaner elements. • Check the engine-oil level. • Inspect the tires.
After each use	• Clean the drum. • Torque the wheel lug nuts to 108 to 122 N·m (80 to 90 ft-lb) after towing.
Every 20 hours	• Check the drive-belt tension and adjust it as necessary. Replace the drive belts if they show any signs of wear, cracks, glazing, or damage.
Every 50 hours	• Clean the air-cleaner elements. Clean them more frequently in dusty operating conditions.
Every 100 hours	• Change the engine oil. • Check the spark plug. • Clean the spark arrester (if equipped). • Replace the drive belts.
Every 300 hours	• Replace the paper air-cleaner element. Replace it more frequently in dusty operating conditions. • Replace the spark plug.
Monthly	• Grease the trunnions and the drum spindle.

Pre-Maintenance Procedures

Preparing the Machine for Maintenance

1. Shut off the engine and allow it to cool completely.
2. Park the machine on a level surface.
3. Remove the machine from the tow vehicle.
4. Secure the machine from movement.
5. Disconnect the spark-plug wire.

Disconnecting the Spark-Plug Wire

Pull the spark-plug wire off the terminal of the spark plug (Figure 38).

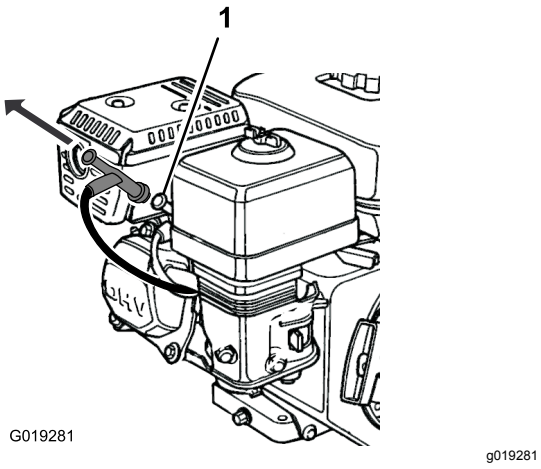

Figure 38

1. Spark plug

Removing the Divider Plate

If your model has a divider plate, you may need to remove it before performing some maintenance procedures:

1. Open the cowl.
2. Use a wrench to remove the 4 bolts that secure the divider plate to the front cowl.

   Note: Retain the fasteners for installing the divider plate.

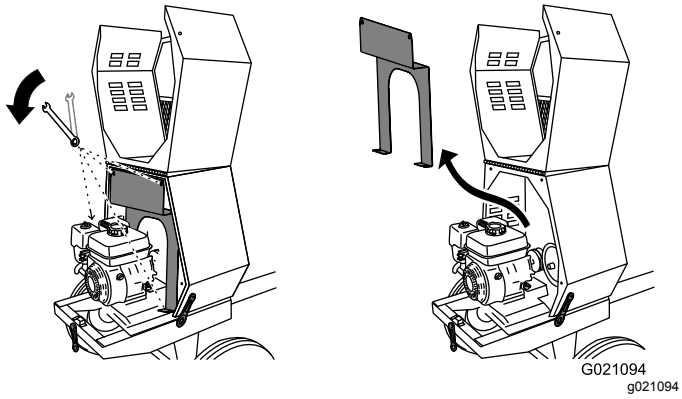

Figure 39

3. To remove the divider plate, lift it upward and tilt it back so that it clears various components.

Installing the Divider Plate

When finished performing maintenance, install the divider plate as follows:

1. Guide the divider plate into position against the front cowl.

   Note: Start with the divider plate tilted slightly back, then tilt it forward while lowering it into position.

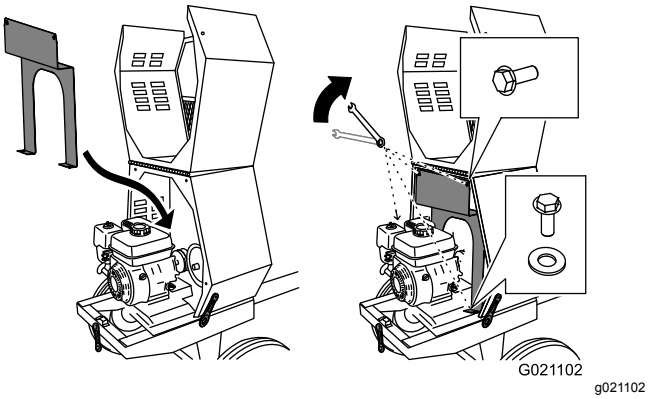

Figure 40

2. Align the bolt holes in the divider plate and the front cowl.
3. Install each of the 4 bolts and hand-tighten them to prevent cross-threading.
4. Tighten the bolts with a wrench until they are secure.

Lubrication

Lubricating the Machine

Service Interval: Monthly—Grease the trunnions and the drum spindle.

Grease Type: No. 2 lithium grease.

1. Complete the procedures listed in Preparing the Machine for Maintenance (page 28).
2. Clean around each grease fitting with a rag and lift the plastic cap off the grease fitting (Figure 41).
3. Use a grease gun to lubricate the grease fittings of both trunnions and the drum spindle with No. 2 lithium grease (Figure 41).
4. Wipe up any excess grease.

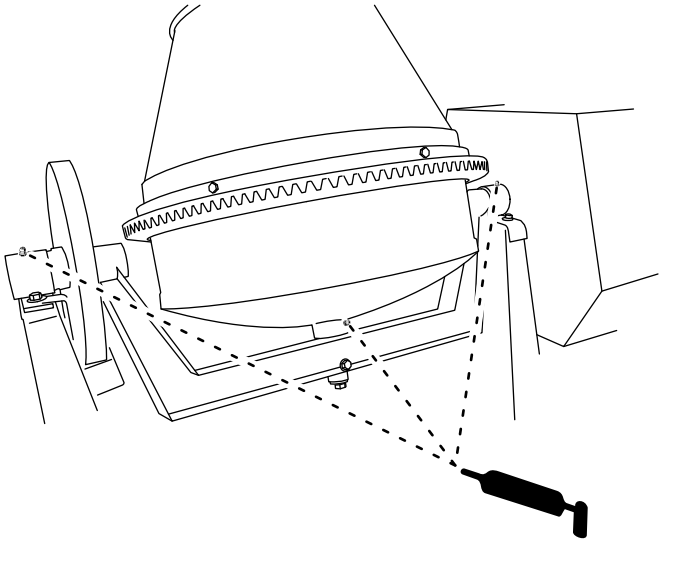

G019678
g019678

Figure 41

Important: **Do not lubricate the pinion gear and ring gear. Lubrication causes them to collect abrasive materials and accelerate wear.**

Engine Maintenance

Servicing the Air Cleaner

Service Interval: Before each use or daily—Inspect the air-cleaner elements.

Every 50 hours—Clean the air-cleaner elements. Clean them more frequently in dusty operating conditions.

Every 300 hours/Yearly (whichever comes first)—Replace the paper air-cleaner element. Replace it more frequently in dusty operating conditions.

Important: **Do not operate the engine without the air-filter assembly; extreme engine damage will occur.**

1. Shut off the engine and wait for all moving parts to stop.
2. Disconnect the wire from the spark plug; refer to Disconnecting the Spark-Plug Wire (page 29).
3. Remove the nut that secures the cover (Figure 42).

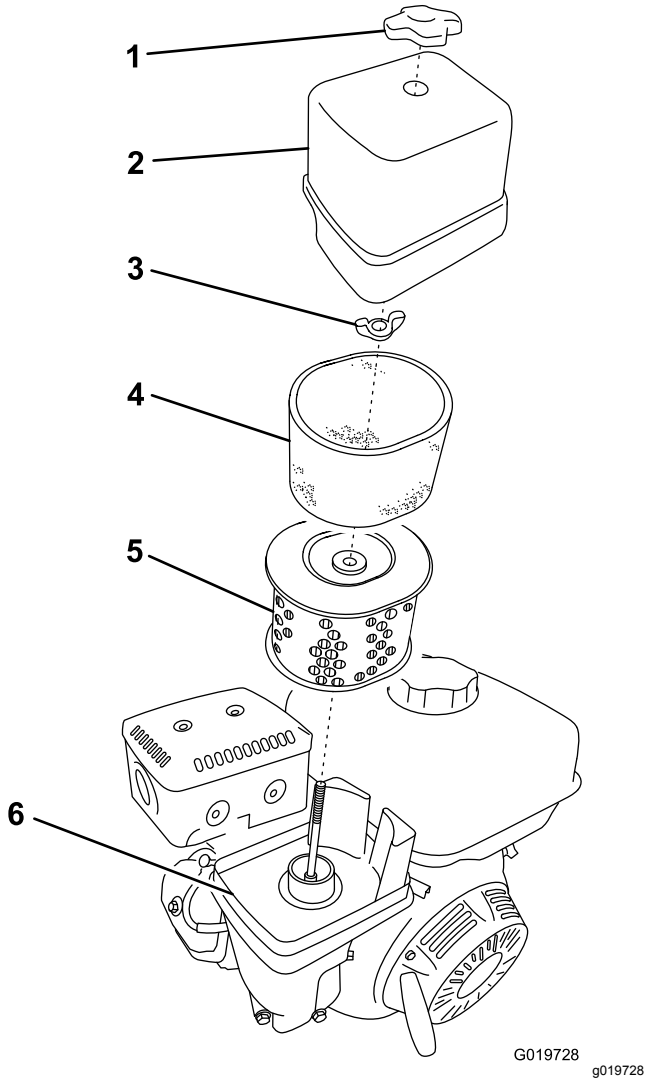

Figure 42

1. Cover nut
2. Cover
3. Wing nut
4. Foam element
5. Paper element
6. Base

4. Remove the cover.

   Note: Be careful to prevent dirt and debris from falling into the base.

5. Remove the foam and paper elements from the base (Figure 42).
6. Remove the foam element from the paper element (Figure 42).
7. Inspect the foam and paper elements and replace them if they are damaged or excessively dirty.

   Note: Never try to brush dirt off the paper element; brushing forces the dirt into the fibers.

8. Clean the foam element in warm, soapy water or in a **nonflammable** solvent.

   Note: Do not use fuel to clean the foam element because it could create a risk of fire or explosion.

9. Rinse and dry the foam element thoroughly.
10. Dip the foam element in clean engine oil, then squeeze out the excess oil.

    Note: Excess oil in the foam element restricts the air flow through the element and may reach the paper filter and clog it.

11. Wipe dirt from the base and the cover with a moist rag.

    Note: Be careful to prevent dirt and debris from entering the air duct leading to the carburetor.

12. Install the air-cleaner elements and ensure that they are properly positioned.
13. Securely install the cover with the nut.

Servicing the Engine Oil

Engine-Oil Specifications

Toro Premium Engine Oil is available from your Authorized Toro Dealer.

Important: **Use 4-cycle engine oil that meets or exceeds the requirements for API service category SJ, SL, SM, or higher.**

Crankcase Capacity: 1.1 L (1.2 US qt)

Important: **If the oil level in the crankcase is too low or too high and you run the engine, you may damage the engine. This type of damage is not covered by the warranty.**

Note: Use SAE 10W-30 for general use. You can use the other viscosities shown in the chart when the average temperature in your area is within the indicated range (Figure 43).

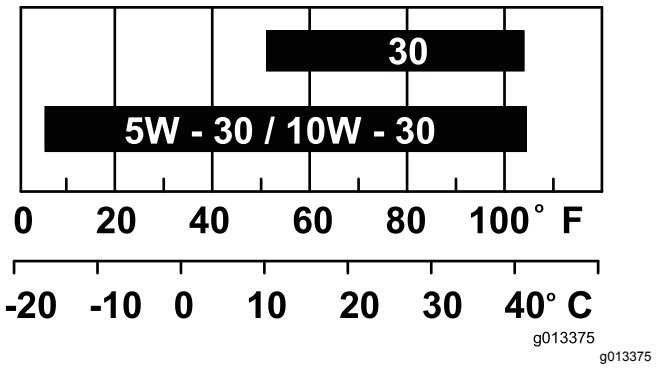

Figure 43

Checking the Engine-Oil Level

Service Interval: Before each use or daily

1. Park the machine on a level surface and shut off the engine.
2. Allow the engine to cool.
3. Disconnect the wire from the spark plug; refer to Disconnecting the Spark-Plug Wire (page 29).
4. Clean around the dipstick.
5. Check the oil level as shown in Figure 44.

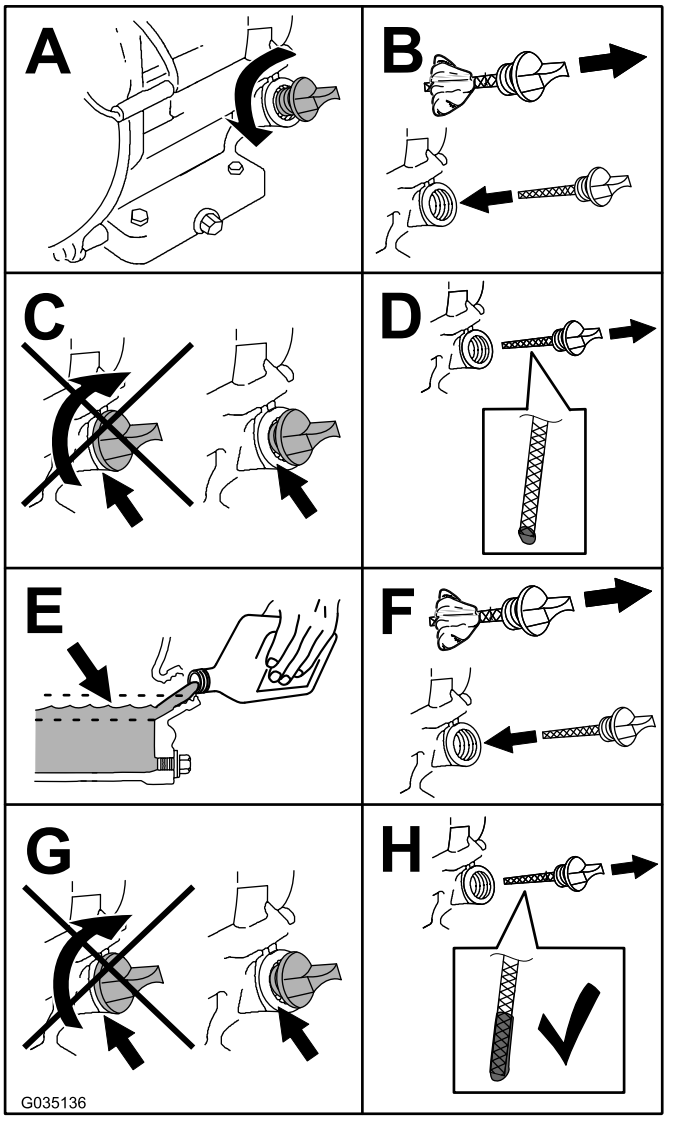

Figure 44

Changing the Engine Oil

Service Interval: After the first 25 hours

Every 100 hours

⚠ WARNING

Oil may be hot after the engine has been run, and contact with hot oil can cause severe personal injury.

Avoid contacting the hot engine oil when you drain it.

1. Shut off the engine and wait for all moving parts to stop.
2. Disconnect the wire from the spark plug; refer to Disconnecting the Spark-Plug Wire (page 29).
3. Place a drain pan under the oil-drain hole of the engine (Figure 45).

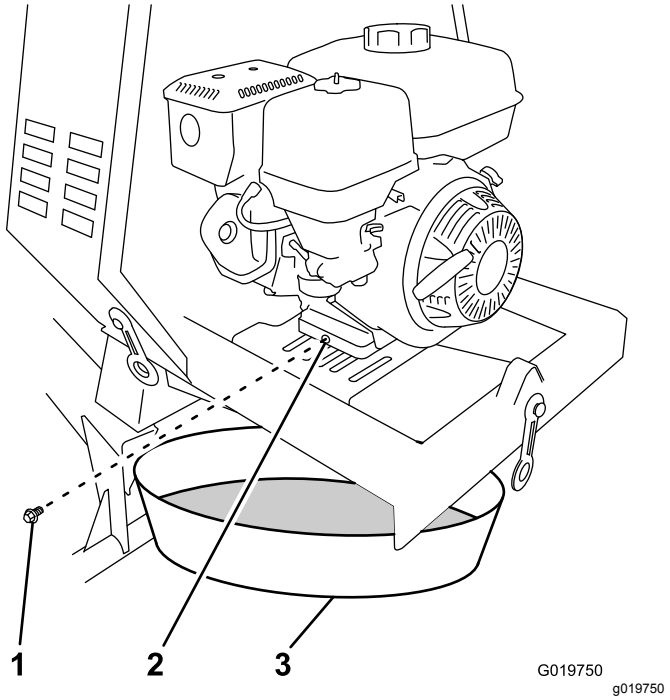

Figure 45

1. Oil-drain plug
2. Oil-drain hole
3. Oil-drain pan

4. Remove the drain plug and catch the oil in the oil-drain pan (Figure 45).
5. When the oil has drained completely, install the drain plug with a new washer (Figure 45).

   Note: Dispose of the used oil at a certified recycling center.
6. Remove the dipstick (Figure 44) and slowly pour oil into the fill hole until the oil reaches the upper-limit mark (bottom edge of the oil-fill hole) on the dipstick.
7. Replace and secure the dipstick.

8. Wipe up any spilled oil.

Servicing the Spark Plug

Service Interval: Every 100 hours/Every 6 months (whichever comes first)—Check the spark plug.

Every 300 hours/Yearly (whichever comes first)—Replace the spark plug.

Spark Plug Specifications

Type: NGK BPR6ES or equivalent

Gap: 0.7 to 0.8 mm (0.028 to 0.031 inch)

Note: Use a 21 mm (13/16 inch) spark-plug wrench for removing and installing the spark plug.

Removing the Spark Plug

1. Park the machine on a level surface and shut off the engine.
2. Ensure that the machine surfaces are cool.
3. Pull the spark-plug wire off the terminal of the spark plug (Figure 46).

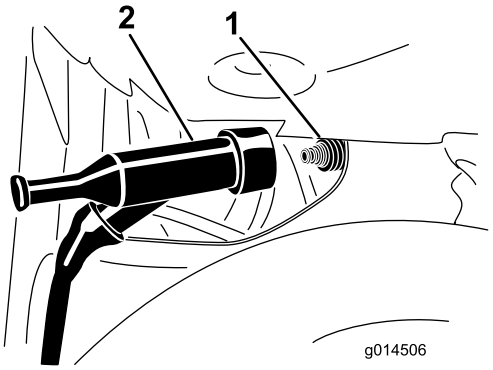

g014506

Figure 46

1. Spark plug
2. Wire

4. Clean around the spark plug.
5. Rotate the spark plug counterclockwise using a 21 mm (13/16 inch) spark-plug wrench to remove the plug and the sealing washer (Figure 47).

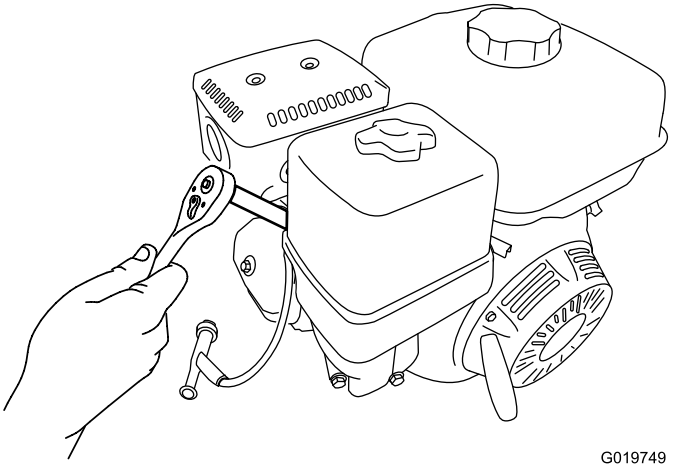

G019749
g019749

Figure 47

Checking the Spark Plug

Important: **Do not clean the spark plug. Always replace the spark plug when it has a black coating, worn electrodes, an oily film, or cracks.**

Note: If you see light brown or gray on the insulator, the engine is operating properly. A black coating on the insulator usually means that the air cleaner is dirty.

Set the gap to 0.7 to 0.8 mm (0.028 to 0.031 inch).

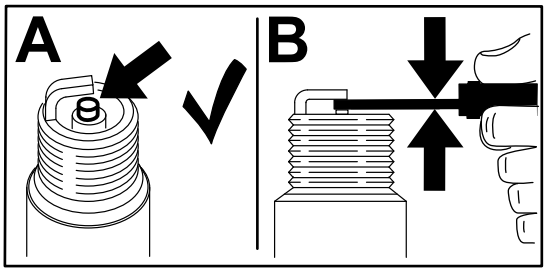

g206628

Figure 48

Installing the Spark Plug

Important: **Ensure that the gap between the side and center electrodes is correct before installing the spark plug.**

1. Thread the spark plug clockwise into the spark-plug hole by hand.

   Note: Avoid cross-threading the spark plug with the threads of the spark-plug hole.

2. Rotate the spark plug clockwise using a 21 mm (13/16 inch) spark-plug wrench until the plug and sealing washer are seated (Figure 47).

3. Tighten the spark plug as follows:

   - When installing an **in-service** spark plug, tighten the plug an additional 1/8 to 1/4 turn.
   - When installing a **new** spark plug, tighten the plug an additional 1/2 turn.

   Important: **A loose spark plug may cause the cylinder to overheat. An over-tight spark plug may damage the threads in the cylinder head.**

4. Push the spark-plug wire onto the terminal of the spark plug (Figure 46).

Cleaning the Spark Arrester

Service Interval: Every 100 hours

Note: A spark arrester is available as an option. If you require a spark arrester, contact your Authorized Service Dealer. Genuine Toro spark arresters are approved by the USDA Forestry Service.

⚠ WARNING

If the engine has been running, the muffler will be hot. Contact with hot surfaces may cause personal injury.

Keep your hands, feet, face, clothing and other body parts away from the muffler and other hot surfaces until they have cooled.

1. Park the machine on a level surface and shut off the engine.
2. Allow the engine to cool.
3. Disconnect the wire from the spark plug; refer to Disconnecting the Spark-Plug Wire (page 29).
4. Remove the divider plate (if equipped); refer to Removing the Divider Plate (page 29).
5. Remove the 2 nuts (8 mm) and remove the muffler from the cylinder (Figure 49).

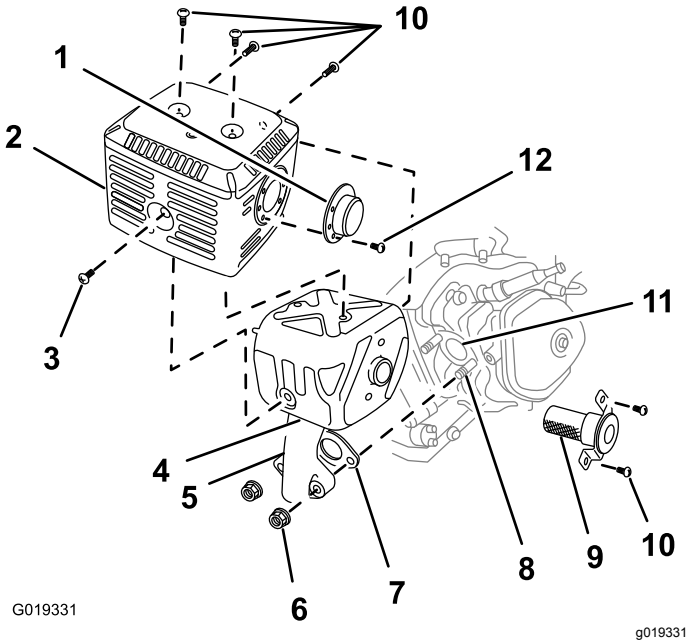

Figure 49

1.	Deflector (if applicable)	5.	Exhaust pipe	9.	Spark arrester
2.	Protector	6.	Nut (8 mm)	10.	Screws (5 mm)
3.	Screw (6 mm)	7.	Gasket	11.	Exhaust port
4.	Muffler	8.	Bolt (8 mm)	12.	Screw (4 mm)

6. Remove the 3 screws (4 mm) from the exhaust deflector, and remove the deflector (Figure 49).

7. Remove the screws (5 mm and 6 mm) from the muffler protector, and remove the muffler protector (Figure 49).
8. Remove the screws (4 mm) from the spark arrester, and remove the spark arrester from the muffler (Figure 49).
9. Use a brush to carefully remove carbon deposits from the spark-arrester screen (Figure 50).

   Note: Replace the spark arrester if it has breaks or holes.

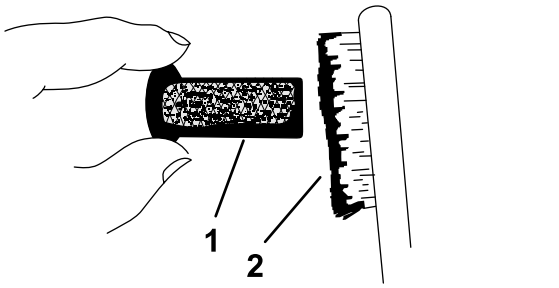

Figure 50

1. Screen
2. Brush

10. Install the spark arrester, muffler protector, exhaust deflector, and muffler in the reverse order of disassembly.
11. Install the divider plate (if equipped); refer to Installing the Divider Plate (page 29).

Drive System Maintenance

Tire Air Pressure

The following table shows the appropriate air pressure for the tires as installed at the factory.

Important: **Always check the information on the actual tires for the correct air pressure requirement.**

Model	Maximum Air Pressure
68004	414 kPa (60 psi)
68006, 68007, 68008, 68009, and 68011	241 kPa (35 psi)

Inspecting the Tires

Service Interval: Before each use or daily

⚠ WARNING

Failure to maintain correct tire pressure may result in tire failure and loss of control, resulting in property damage and serious injury or death.

- **Check the tire pressure frequently to ensure proper inflation. If the tires are not inflated to the correct pressure, they will wear prematurely.**
- **Inspect the tire condition before towing and after any operating accident.**

The DOT tire information is located on the side of each tire. This information gives load and speed ratings. Replacement tires should have the same or better ratings

Note: Ensure that any tires installed on your machine meet or exceed the weight requirements of your machine as listed in Specifications (page 15).

1. Visually inspect the tires for damage and wear (Figure 51 and Figure 52).

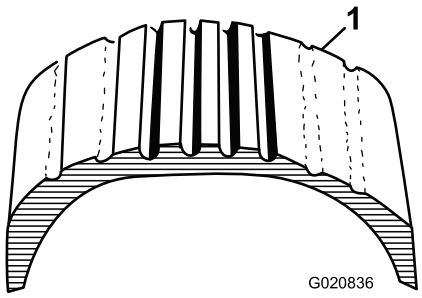

g020836

Figure 51

1. Example of tire wear caused by underinflation

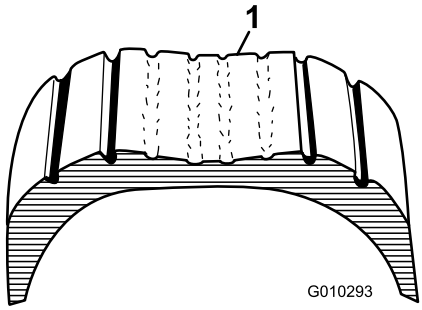

g010293

Figure 52

1. Example of tire wear caused by overinflation

2. Ensure that the tires are inflated to the correct air pressure; refer to Tire Air Pressure (page 35).

   Important: **The most common cause of tire trouble is under-inflation. Maintain full air pressure.**

Torquing the Wheel Lug Nuts

Service Interval: After each use

Torque the wheel lug nuts initially and after towing.

Torque the wheel lug nuts 108 to 122 N·m (80 to 90 ft-lb), in the sequence shown in Figure 53.

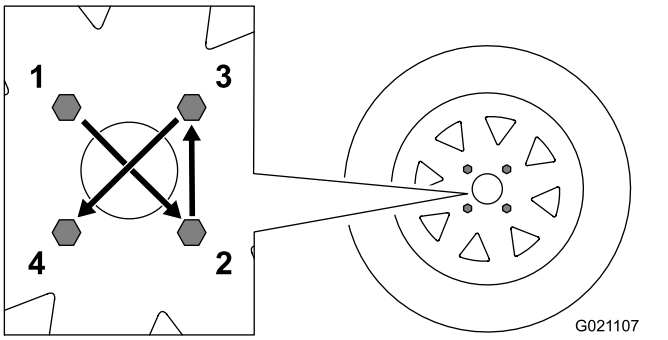

g021107

Figure 53

Belt Maintenance

Checking the Drive-Belt Tension

Service Interval: Every 20 hours—Check the drive-belt tension and adjust it as necessary. Replace the drive belts if they show any signs of wear, cracks, glazing, or damage.

The drive belts should each have 1 cm (13/32 inch) of flex when applying 6.8 kg (15 lb) of pressure, at mid-span (Figure 54).

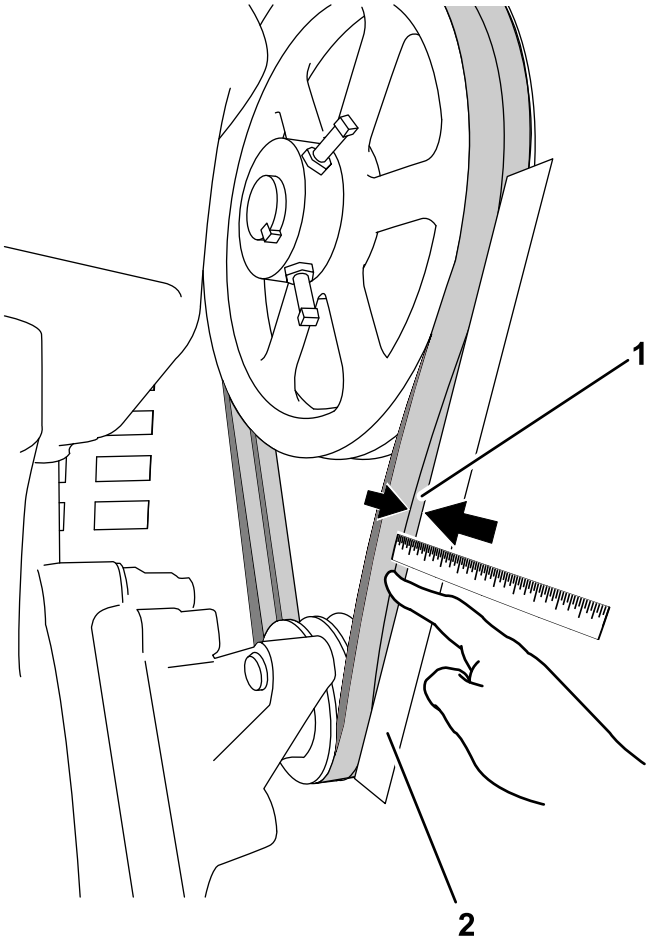

g019731

Figure 54

Drive Belts

1. Flex of 1 cm (13/32 inch) 2. Straightedge

1. Park the machine on a level surface and shut off the engine.
2. Allow the engine to cool.
3. Disconnect the wire from the spark plug; refer to Disconnecting the Spark-Plug Wire (page 29).

4. Remove the divider plate; refer to Removing the Divider Plate (page 29).
5. Lay a straightedge along 1 drive belt, from 1 pulley to the other (Figure 54).
6. With your finger, push on the belt with 6.8 kg (15 lb) of pressure, midway between the pulleys (Figure 54).
7. Measure the distance from the belt to the straightedge. The distance should be approximately 1 cm (13/32 inch) as shown in Figure 54.

   Note: If the belt tension needs adjustment, refer to Adjusting the Drive-belt Tension (page 37).
8. Install the divider plate; refer to Installing the Divider Plate (page 29).

Adjusting the Drive-belt Tension

1. Park the machine on a level surface and shut off the engine.
2. Allow the engine to cool.
3. Disconnect the wire from the spark plug; refer to Disconnecting the Spark-Plug Wire (page 29).
4. Remove the divider plate; refer to Removing the Divider Plate (page 29).
5. Loosen the 4 nuts and bolts that secure the engine to the engine mounting plate (Figure 55).

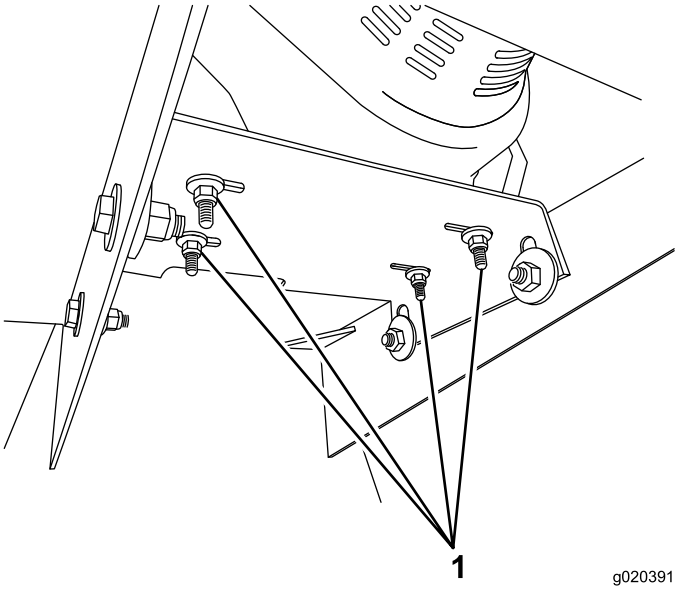

Figure 55

1. Engine-mounting nuts and bolts (4 each)

6. Slide the engine left to increase tension on the drive belt or right to decrease tension.
7. Check the drive-belt tension; refer to Checking the Drive-Belt Tension (page 36).

   Note: When the belts have the appropriate amount of tension, torque the 4 nuts and bolts to 24 N·m (18 ft-lb) each.
8. Install the divider plate; refer to Installing the Divider Plate (page 29).

Replacing the Drive Belts

Service Interval: Every 100 hours

Note: The machine has 2 drive belts. Remember to buy 2 belts for replacement.

1. Complete steps 1 through 5 in Adjusting the Drive-belt Tension (page 37).
2. Slide the engine to the right to decrease the belt tension.
3. Remove the drive belts from the pulleys.
4. Install the new drive belts on the pulleys.
5. Slide the engine to the left until the belts have the correct tension; refer to Adjusting the Drive-belt Tension (page 37).
6. Torque the 4 mounting nuts and bolts to 24 N·m (18 ft-lb) each (Figure 55).
7. Install the divider plate; refer to Installing the Divider Plate (page 29).

Replacing the Light Bulbs

Replacing the Rear-facing Side Bulbs

Note: The left rear-facing bulb also illuminates license plate.

1. Use a screwdriver to remove the 4 screws from the large square lens on the light (Figure 56).

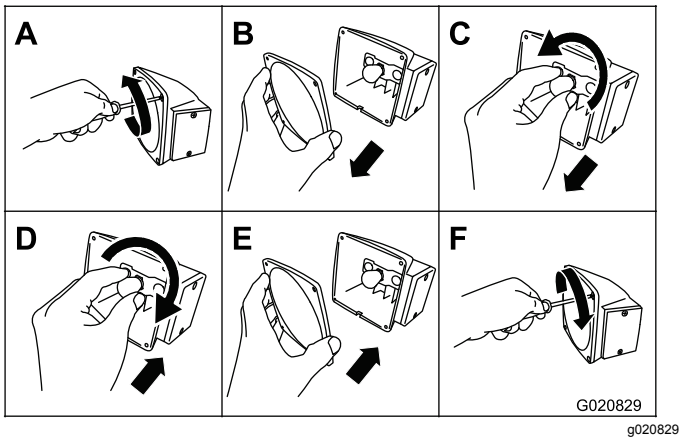

Figure 56

2. Remove the lens (Figure 56).
3. Push and twist the bulb counterclockwise to remove it from the socket (Figure 56).
4. Push a new 1157 bulb into the socket and then twist it clockwise (Figure 56).
5. Install the lens and the 4 screws (Figure 56).

Replacing the Side-facing Bulbs

1. Use a screwdriver to remove the 2 screws from the small rectangular lens on the side of the light (Figure 57).

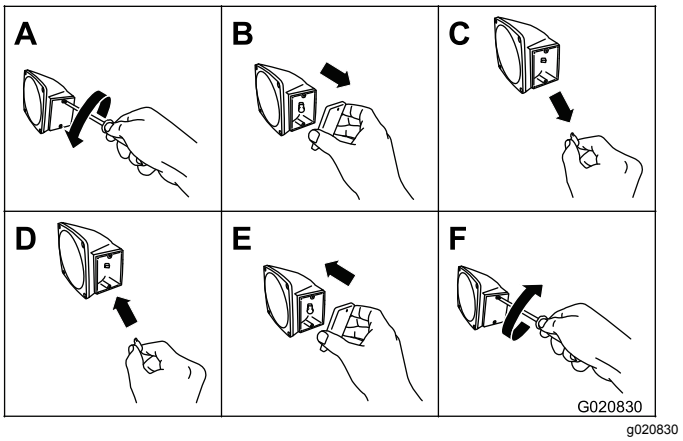

Figure 57

2. Remove the lens (Figure 57).
3. Pull the bulb out of the socket (Figure 57).
4. Push a new 168 bulb into the socket (Figure 57).
5. Install the lens and the 2 screws (Figure 57).

Replacing the Center Bulbs

Models 68007C and 68008C only

Note: Each center bulb is integrated into the lens.

1. Push 1 of the tabs over that holds the lens assembly in place, and pull the lens away from the rest of the center-light assembly (Figure 58).

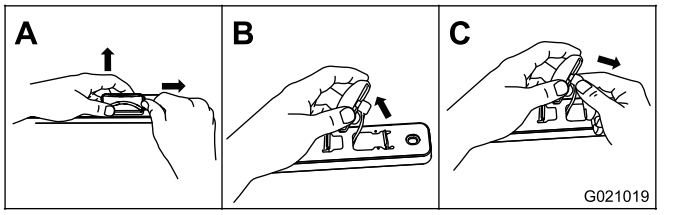

g021019

Figure 58

2. Disconnect the wire connector from the lens assembly.
3. Connect the wire connector to a new lens assembly, and install the lens assembly onto the rest of the center-light assembly (Figure 59).

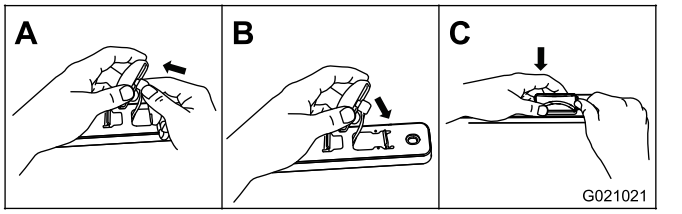

g021021

Figure 59

Cleaning

Cleaning the Machine

Regular cleaning and washing with mild detergent and water increases the life span of the machine. Clean the machine after each use before the dirt hardens.

Remove dirt and grime from the external parts of the entire machine, especially the engine. Clean dirt and concrete materials from the outside of the engine.

Ensure that the fuel cap and the oil-fill cap/dipstick are secure to avoid getting water in the engine.

Use care when using a high-pressure sprayer because it can damage the safety decals, instruction signs, and the engine.

Important: **Lubricate the bearings and seals after cleaning; refer to Lubricating the Machine (page 30).**

Storage

For storage over 30 days, prepare the machine as follows:

1. Remove dirt and grime from the external parts of the entire machine, especially the engine. Clean dirt and debris from the outside of the engine cylinder-head fins and blower housing.

   Important: **You can wash the machine with mild detergent and water.**

2. Condition the fuel system as follows:

   A. Add a petroleum-based stabilizer/conditioner to fresh fuel in the tank. Follow the mixing instructions from the stabilizer manufacturer. **Do not** use an alcohol-based stabilizer (ethanol or methanol).

      Important: **Do not store fuel containing stabilizer/conditioner longer than the duration recommended by the fuel-stabilizer manufacturer.**

   B. Run the engine for 5 minutes to distribute the conditioned fuel through the fuel system.

   C. Shut off the engine, allow it to cool, and drain the fuel tank using a pump-type siphon. Dispose of fuel properly; recycle it according to local codes.

   D. Start the engine and run it until it stops.

   E. Choke the engine.

   F. Start and run the engine until it does not start again.

3. Service the air cleaner; refer to Servicing the Air Cleaner (page 30).

4. Change the engine oil; refer to Changing the Engine Oil (page 32).

5. Remove the spark plug and check the condition; refer to Servicing the Spark Plug (page 33).

6. Condition the engine as follows:

   A. Pour 2 tablespoons of engine oil into the spark-plug hole; refer to Removing the Spark Plug (page 33).

   B. Pull the recoil-start handle slowly to crank the engine and distribute the oil inside the cylinder.

   C. Install the spark plug; refer to Installing the Spark Plug (page 34).

      Note: Do not install the wire on the spark plug.

7. Grease the machine; refer to Lubricating the Machine (page 30).

8. Check and tighten all bolts, nuts, and screws. Repair or replace any part that is damaged.

9. Paint all scratched or bare metal surfaces with paint available from your Authorized Service Dealer.

10. Store the machine in a clean, dry garage or storage area.

11. Cover the machine to protect it and keep it clean.

Troubleshooting

Problem	Possible Cause	Corrective Action
The engine does not start.	1. The engine switch on the cowl is in the STOP position.	1. Press the engine switch to the RUN position.
	2. The fuel valve is in the OFF position.	2. Move the fuel-valve lever to the ON position.
	3. The choke is open.	3. Close the choke when starting a cold engine.
	4. The choke is closed.	4. Open the choke when starting a hot engine.
	5. The engine On/Off switch is in the OFF position.	5. Turn the switch to the ON position.
	6. The engine-oil level is low.	6. Fill the engine to the proper level with the recommended oil.
	7. The fuel tank is empty.	7. Fill the fuels tank with fresh fuel.
	8. The spark-plug wire is loose or disconnected.	8. Connect the spark-plug wire.
	9. The spark plug is fouled or improperly gapped.	9. Gap or replace the spark plug.
	10. The spark plug is wet with fuel (flooded engine).	10. Remove the spark plug, dry it, and install the plug. Start the engine with the throttle in the MAX position.
	11. The fuel is old or bad.	11. Drain the fuel tank and carburetor. Fill the fuel tank with fresh fuel.
The engine lacks power or runs rough.	1. The air filter is restricted.	1. Clean or replace the air-filter element(s).
	2. The engine contains bad or old fuel.	2. Drain the fuel tank and carburetor. Refuel with fresh fuel.
	3. There is water or contamination in the fuel.	3. Drain the fuel tank and carburetor. Refuel with fresh fuel.
	4. The fuel line is restricted.	4. Clean the fuel filter and sediment cup.
	5. The choke is closed	5. Open the choke.
	6. The spark plug is worn or has buildup on the electrodes.	6. Check the electrode gap and adjust or replace the spark plug.
	7. There is too much oil in the engine crankcase.	7. Drain the oil to the proper level.
The drive belts are worn or burned, or they jump off the pulley.	1. The drive-belt tension needs adjustment.	1. Adjust the drive-belt tension.
	2. The drive belts may be stretched.	2. Replace the drive belts.
	3. The pulleys are out of alignment.	3. Contact your Authorized Service Dealer.
The drum does not turn.	1. The belts are loose or damaged.	1. Check the drive belts.
The drum does not tilt.	1. The drum-tilt brake is engaged.	1. Disengage the drum-tilt brake.
The drum chatters or turns erratically.	1. Teeth are missing from the gears.	1. Contact your Authorized Service Dealer.
	2. The gears are misaligned.	2. Contact your Authorized Service Dealer.
The machine vibrates excessively.	1. There is debris in the drum.	1. Remove the debris.
	2. The mixing paddles are damaged.	2. Contact your Authorized Service Dealer.

Notes:

California Proposition 65 Warning Information

What is this warning?

You may see a product for sale that has a warning label like the following:



WARNING: Cancer and Reproductive Harm—www.p65Warnings.ca.gov.

What is Prop 65?

Prop 65 applies to any company operating in California, selling products in California, or manufacturing products that may be sold in or brought into California. It mandates that the Governor of California maintain and publish a list of chemicals known to cause cancer, birth defects, and/or other reproductive harm. The list, which is updated annually, includes hundreds of chemicals found in many everyday items. The purpose of Prop 65 is to inform the public about exposure to these chemicals.

Prop 65 does not ban the sale of products containing these chemicals but instead requires warnings on any product, product packaging, or literature with the product. Moreover, a Prop 65 warning does not mean that a product is in violation of any product safety standards or requirements. In fact, the California government has clarified that a Prop 65 warning "is not the same as a regulatory decision that a product is 'safe' or 'unsafe.'" Many of these chemicals have been used in everyday products for years without documented harm. For more information, go to https://oag.ca.gov/prop65/faqs-view-all.

A Prop 65 warning means that a company has either (1) evaluated the exposure and has concluded that it exceeds the "no significant risk level"; or (2) has chosen to provide a warning based on its understanding about the presence of a listed chemical without attempting to evaluate the exposure.

Does this law apply everywhere?

Prop 65 warnings are required under California law only. These warnings are seen throughout California in a wide range of settings, including but not limited to restaurants, grocery stores, hotels, schools, and hospitals, and on a wide variety of products. Additionally, some online and mail order retailers provide Prop 65 warnings on their websites or in catalogs.

How do the California warnings compare to federal limits?

Prop 65 standards are often more stringent than federal and international standards. There are various substances that require a Prop 65 warning at levels that are far lower than federal action limits. For example, the Prop 65 standard for warnings for lead is 0.5 µg/day, which is well below the federal and international standards.

Why don't all similar products carry the warning?

- Products sold in California require Prop 65 labelling while similar products sold elsewhere do not.
- A company involved in a Prop 65 lawsuit reaching a settlement may be required to use Prop 65 warnings for its products, but other companies making similar products may have no such requirement.
- The enforcement of Prop 65 is inconsistent.
- Companies may elect not to provide warnings because they conclude that they are not required to do so under Prop 65; a lack of warnings for a product does not mean that the product is free of listed chemicals at similar levels.

Why does Toro include this warning?

Toro has chosen to provide consumers with as much information as possible so that they can make informed decisions about the products they buy and use. Toro provides warnings in certain cases based on its knowledge of the presence of one or more listed chemicals without evaluating the level of exposure, as not all the listed chemicals provide exposure limit requirements. While the exposure from Toro products may be negligible or well within the "no significant risk" range, out of an abundance of caution, Toro has elected to provide the Prop 65 warnings. Moreover, if Toro does not provide these warnings, it could be sued by the State of California or by private parties seeking to enforce Prop 65 and subject to substantial penalties.



Count on it.