Form No. 3429-730 Rev A

TORO®

Count on it.

Parts Catalog

CM-658H-S

Concrete Mixer

Model No. 68004C—Serial No. 404320000 and Up

Register at www.Toro.com.
Original Instructions (EN)

3429-730 A

Ordering Replacement Parts

To order replacement parts, please supply the part number, the quantity, and the description of each part desired.

Understanding Reference Numbers

Each identified part in an illustration has a reference number. The reference number for a part also appears in the parts list, along with other information about the part.

This catalog uses two special reference number formats, one to indicate parts in a service assembly and another to indicate the quantity of a given part in an illustration.

Service Assembly Reference Numbers

Parts in service assemblies have reference numbers in the form a:b. The a represents the reference number of the entire service assembly and the b represents a sequential number unique to each part within the service assembly.

For example, a wheel assembly might be identified by reference number 6, the tire by 6:1, the valve by 6:2, and the wheel by 6:3. When you order the assembly identified by reference number 6, you receive all parts identified by reference numbers 6:1,6:2, and 6:3. However, you may also order any part individually. Reference numbers of this type appear in illustration and in parts lists.

Reference Numbers Indicating Quantity

In an illustration, if a reference number indicates more than one part, the reference number has the form nX y. The n represents the quantity of the part, the X is the multiplication symbol, and the y represents the reference number.

For example, in an illustration, the reference number 2X 37 means that two of the parts identified by reference number 37 are indicated.

Contents

Frame and Yoke Assembly 4
Axle Assembly 6
Hub Assembly No. 125-8171 8
Engine Assembly 10
Drum Assembly 12
Cowl Assembly 14
Trailer Light Assembly 16
Attachments and Accessories 18

© 2019—The Toro® Company
8111 Lyndale Avenue South
Bloomington, MN 55420

Contact us at www.Toro.com.
Printed in the USA.
All Rights Reserved

Frame and Yoke Assembly

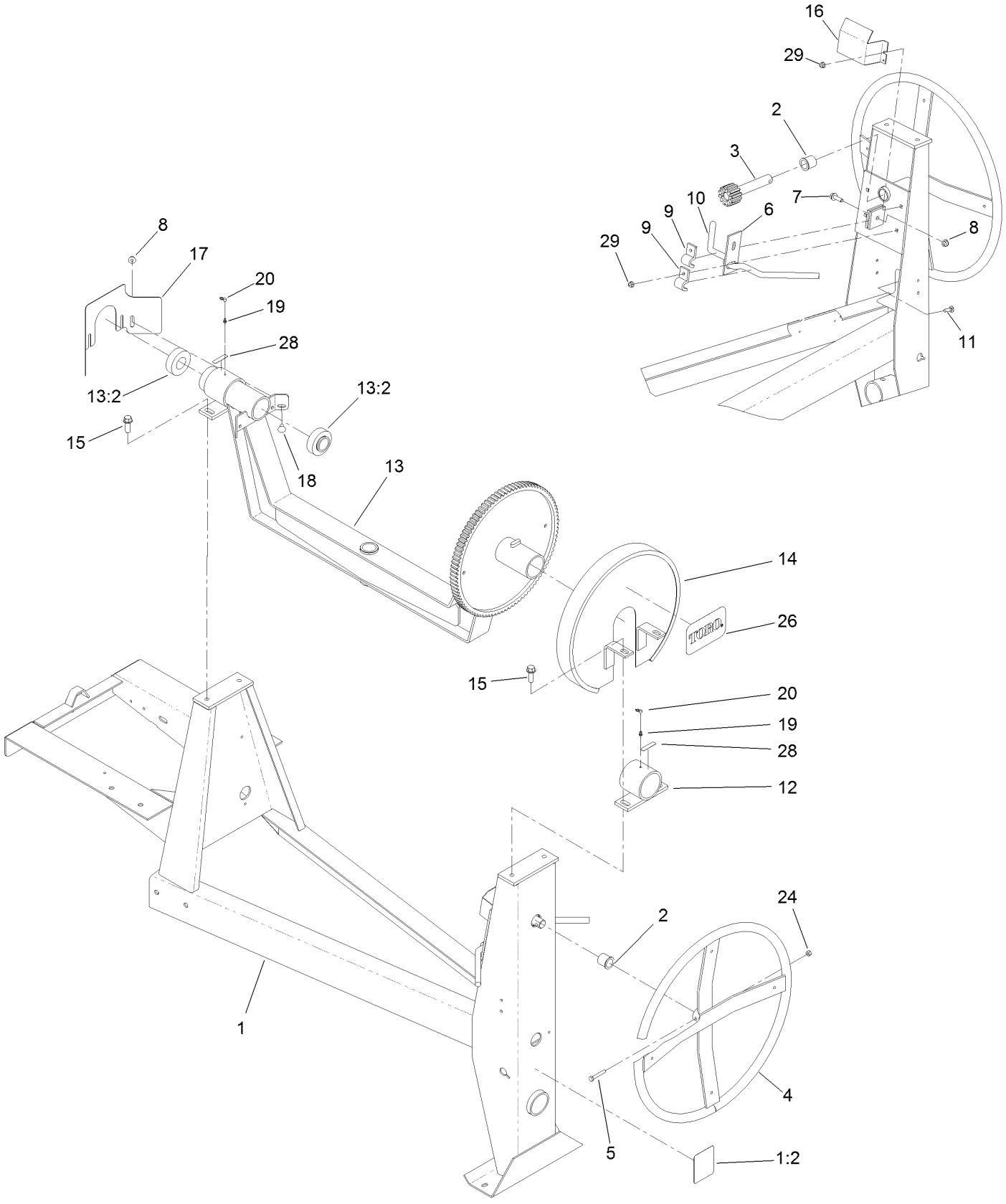

Frame and Yoke Assembly (continued)

Ref.	Part Number	Qty.	Description
1	127-2813	1	Frame ASM
1:2	125-8216	1	Decal-Safety Chain, Towing
2	ST32032	2	Bushing-Nylon
3	ST22029	1	Shaft-Tilt
4	ST22096-03	1	Handwheel
5	322-10	1	Screw-HH
6	ST27619-03	1	Dog-Brake
7	3234-24	1	Screw-HHF
8	104-8301	3	Nut-HF, NI
9	ST27559-03	2	Bracket-Handle
10	ST27621	1	Handle-Brake
11	3230-2	4	Bolt-CARR
12	ST24349-03	2	Trunnion
13	125-6307	1	Yoke ASM
13:2	ST32039	2	Bearing
14	ST27617-03	1	Guard-Brake, Upper
15	ST80031	4	Screw-HWH
16	ST27618-03	1	Guard-Brake, Lower
17	130-2208-03	1	Guard-Pinion
18	3231-21	2	Screw-CARR
19	ST46042	2	Fitting-Grease
20	ST47001	2	Cap-Plug
24	3296-29	1	Nut-Lock, NI
26	99-4693	1	Decal
28	125-8175	2	Decal-Grease
29	104-8300	4	Nut-HF, NI

Axle Assembly

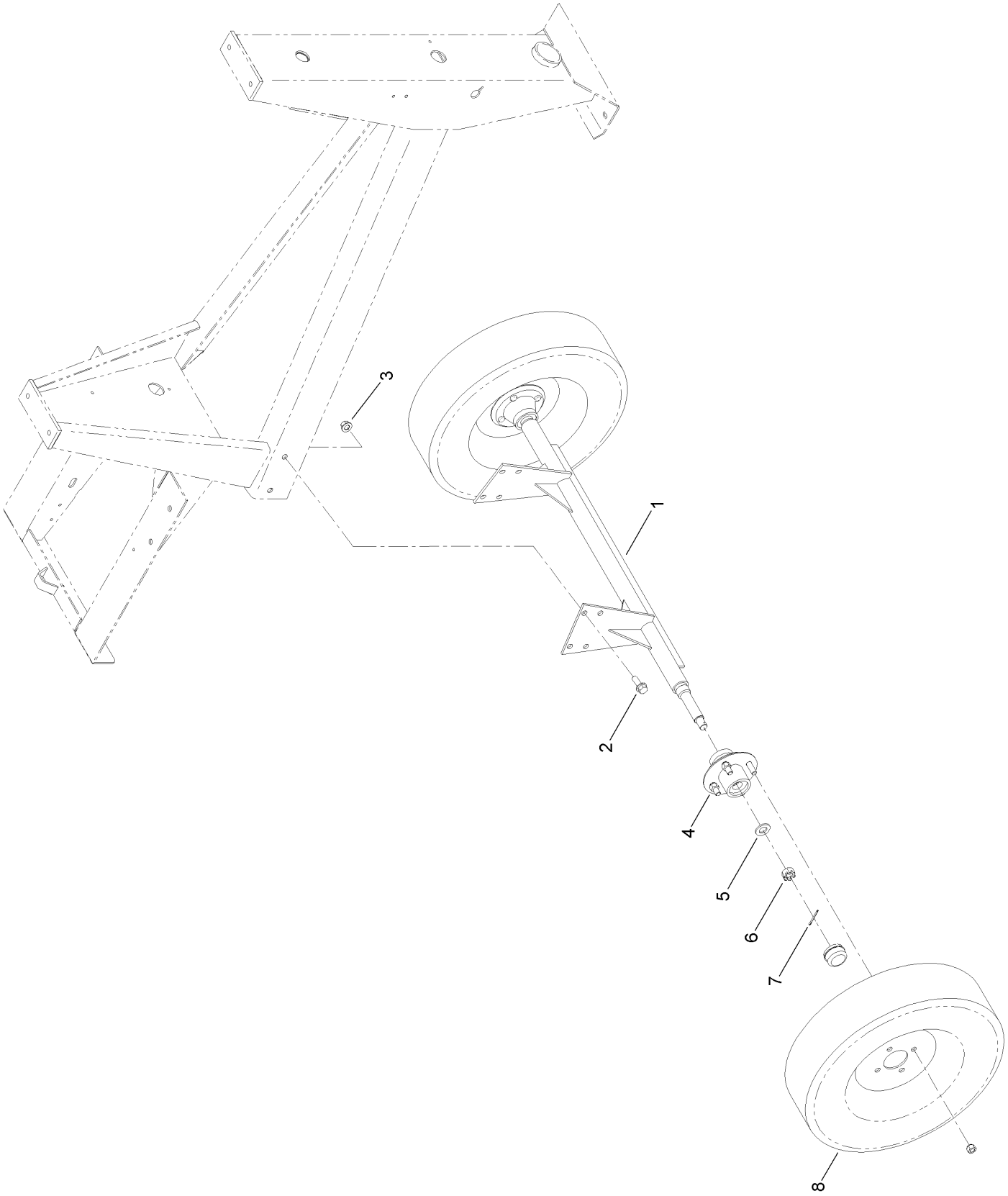

Axle Assembly (continued)

Ref.	Part Number	Qty.	Description
1	ST22031-03	1	Axle
2	100-6116	4	Screw-HHF
3	99-5107	4	Nut-Lock
4	125-8171	2	Hub ASM
5	3256-28	2	Washer-Flat
6	ST80054	2	Nut
7	3272-13	2	Pin-Cotter
8	ST32306	2	Tire And Rim ASM

Hub Assembly No. 125-8171

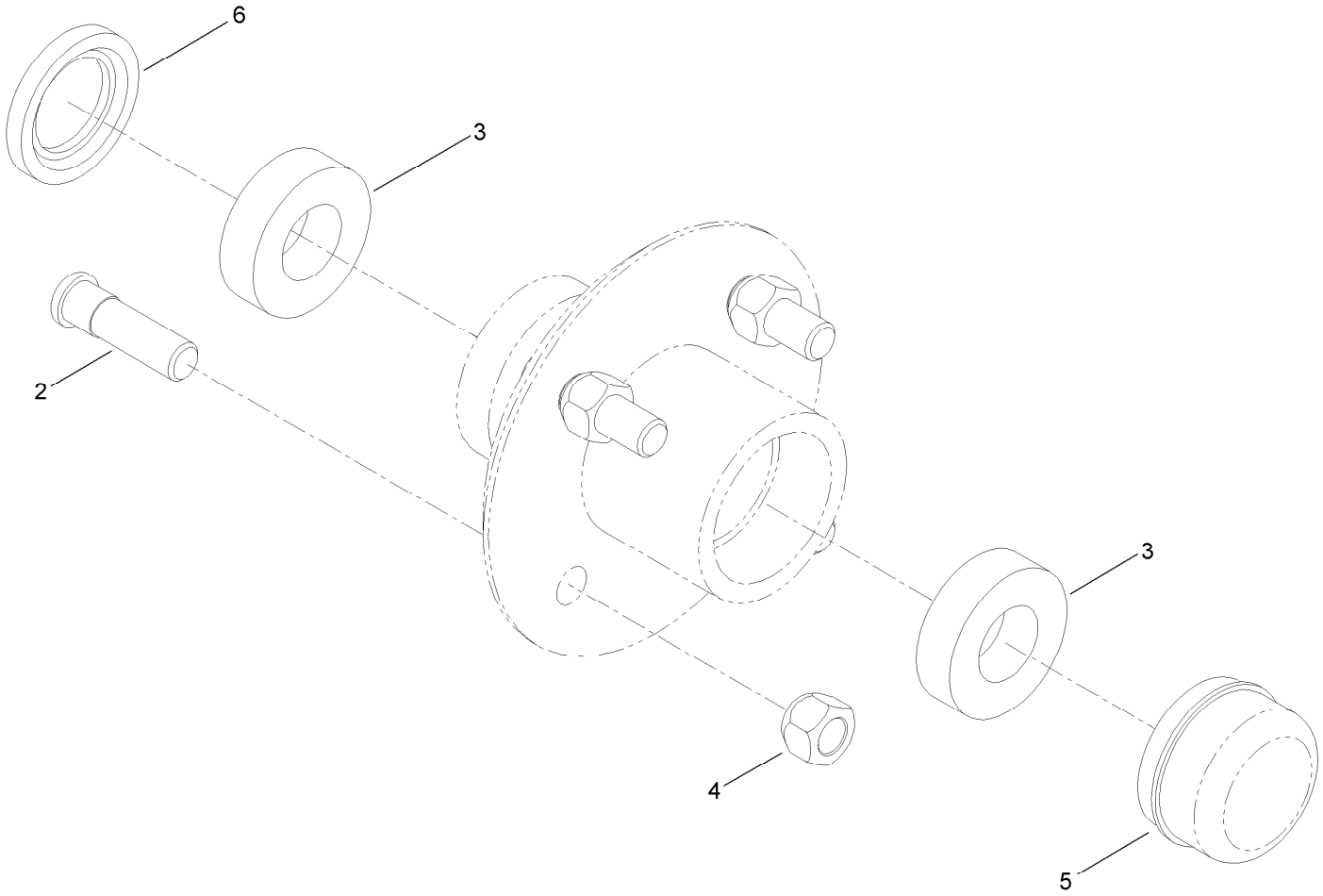

Hub Assembly No. 125-8171 (continued)

Ref.	Part Number	Qty.	Description
2	ST39190	4	Stud-Wheel
3	ST32233	2	Bearing-Roller
4	ST80045	4	Nut-Lug
5	ST34573	1	Cap-Dust
6	ST32052	1	Seal-Hub, Wheel

Engine Assembly

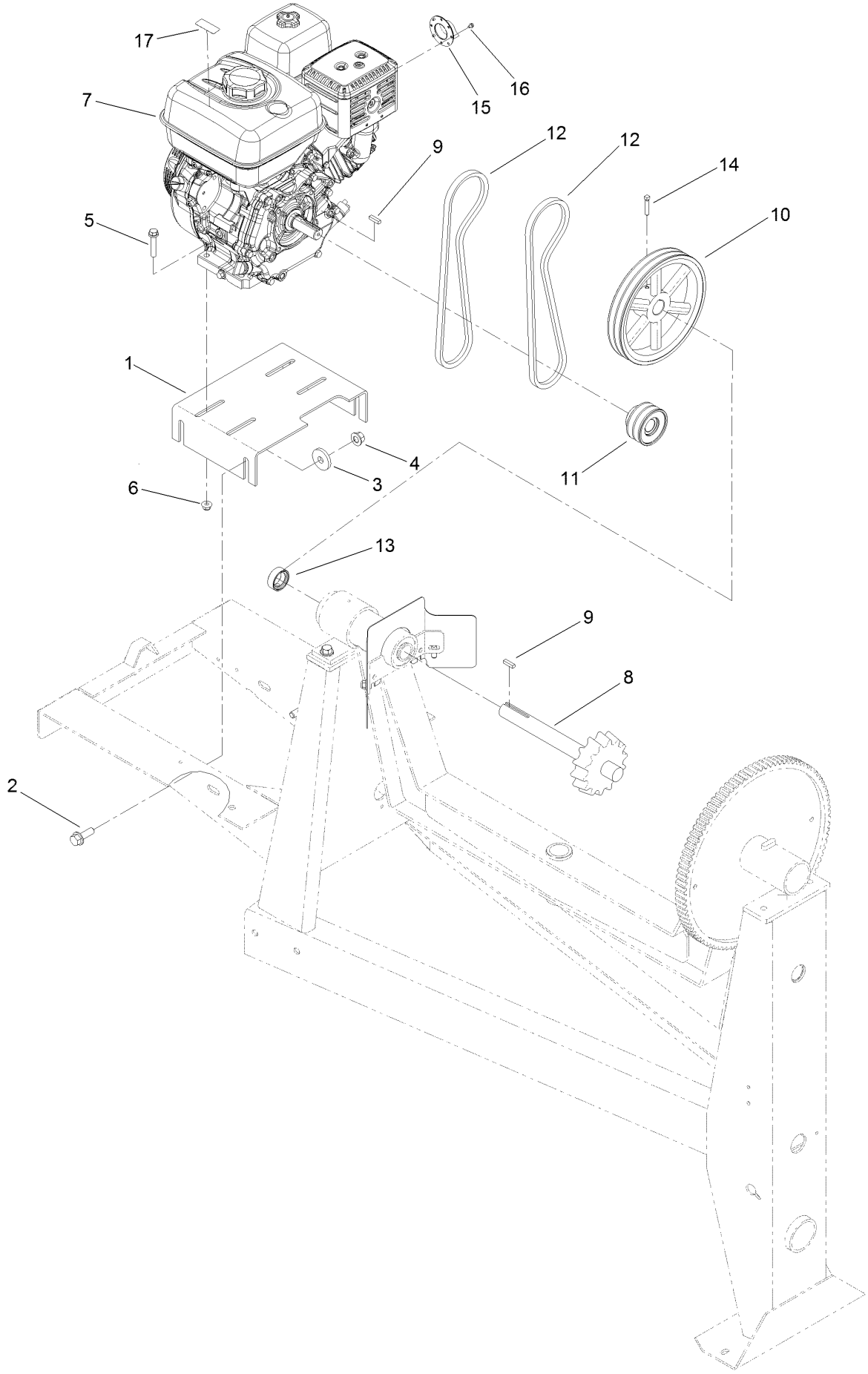

Engine Assembly (continued)

Ref.	Part Number	Qty.	Description
1	ST28040-03	1	Base-Motor
2	100-6116	4	Screw-HHF
3	ST26326	4	Washer-Flat
4	99-5107	4	Nut-Lock
5	108-3742	4	Screw-HHF
6	104-8301	4	Nut-HF, NI
7	125-4812	1	Engine-Honda, Gx240 ●
8	ST21487	1	Shaft-Drive
9	5-7280	2	Key
10	ST34986-03	1	Sheave
11	ST34984	1	Sheave
12	127-0075	2	Belt-V
13	ST32176	1	Collar-Locking
14	909546	2	Screw-Set
15	120-1886	1	Deflector-Exhaust, Honda
16	127-7578	3	Screw-HWH
17	130-8322	1	Decal-Warning, Ethanol

● Obtain parts from www.honda-engines.com

Drum Assembly

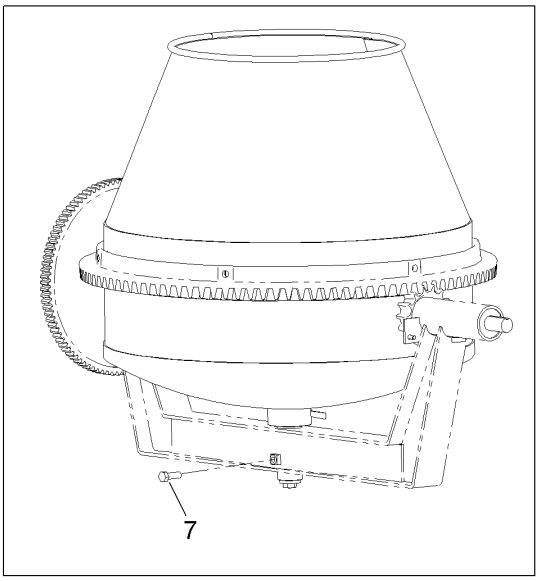

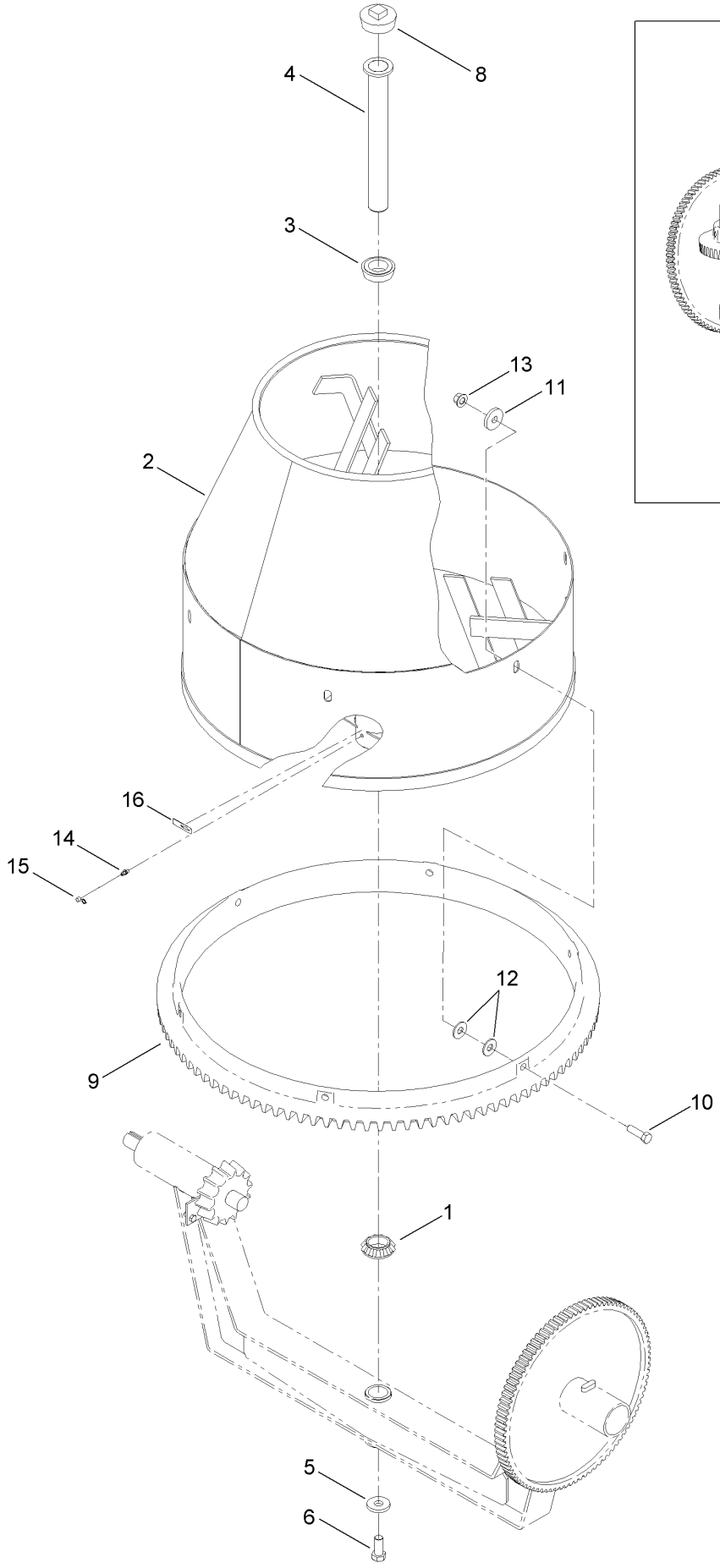

Drum Assembly (continued)

Ref.	Part Number	Qty.	Description
1	ST32161	1	Bearing-Roller
2	125-6305-01	1	Drum
3	ST32086	1	Bearing
4	ST27267	1	Spindle
5	ST27413	1	Washer-Flat
6	327-4	1	Screw-HH
7	325-6	1	Screw-HH
8	ST46022	1	Plug
9	ST26095-01	1	Gear-Ring
10	325-7	6	Screw-HH
11	ST26326	6	Washer-Flat
12	3256-6	12	Washer-Flat
13	99-5107	6	Nut-Lock
14	ST46057	1	Fitting
15	ST47001	1	Cap-Plug
16	125-8175	1	Decal-Grease

Cowl Assembly

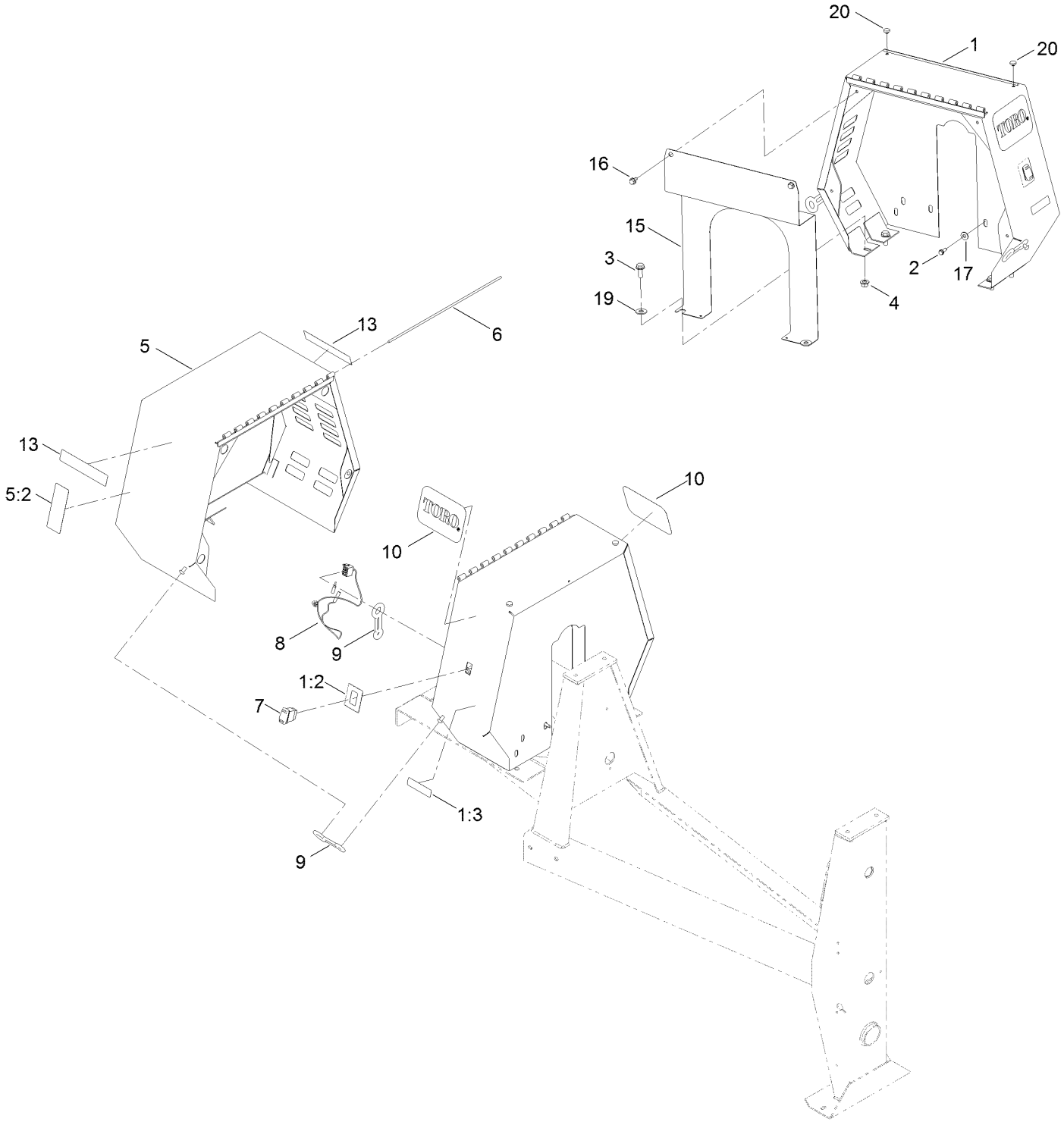

Cowl Assembly (continued)

Ref.	Part Number	Qty.	Description
1	127-2811	1	Stationary Cowl ASM
1:2	125-4940	1	Decal-Stop, Engine
1:3	133-8062	1	Decal-Arrestor, Spark
2	701243	2	Screw-Thd Roll, HWH
3	3234-38	4	Screw-HHF
4	99-5107	4	Nut-Lock
5	127-1685	1	Movable Cowl ASM
5:2	125-4939	1	Decal-Warning
6	ST44368	1	Pin
7	95-8999	1	Switch
8	125-4877	1	Harness-Wire, Mixer
9	ST47182	3	Latch-Rubber
10	67-7320	2	Decal
13	125-4936	2	Decal
15	125-8218-03	1	Plate-Engine
16	110-9380	2	Screw-HWH
17	3256-4	2	Washer-Flat
19	3256-6	2	Washer-Flat
20	1-513658	2	Bumper

Trailer Light Assembly

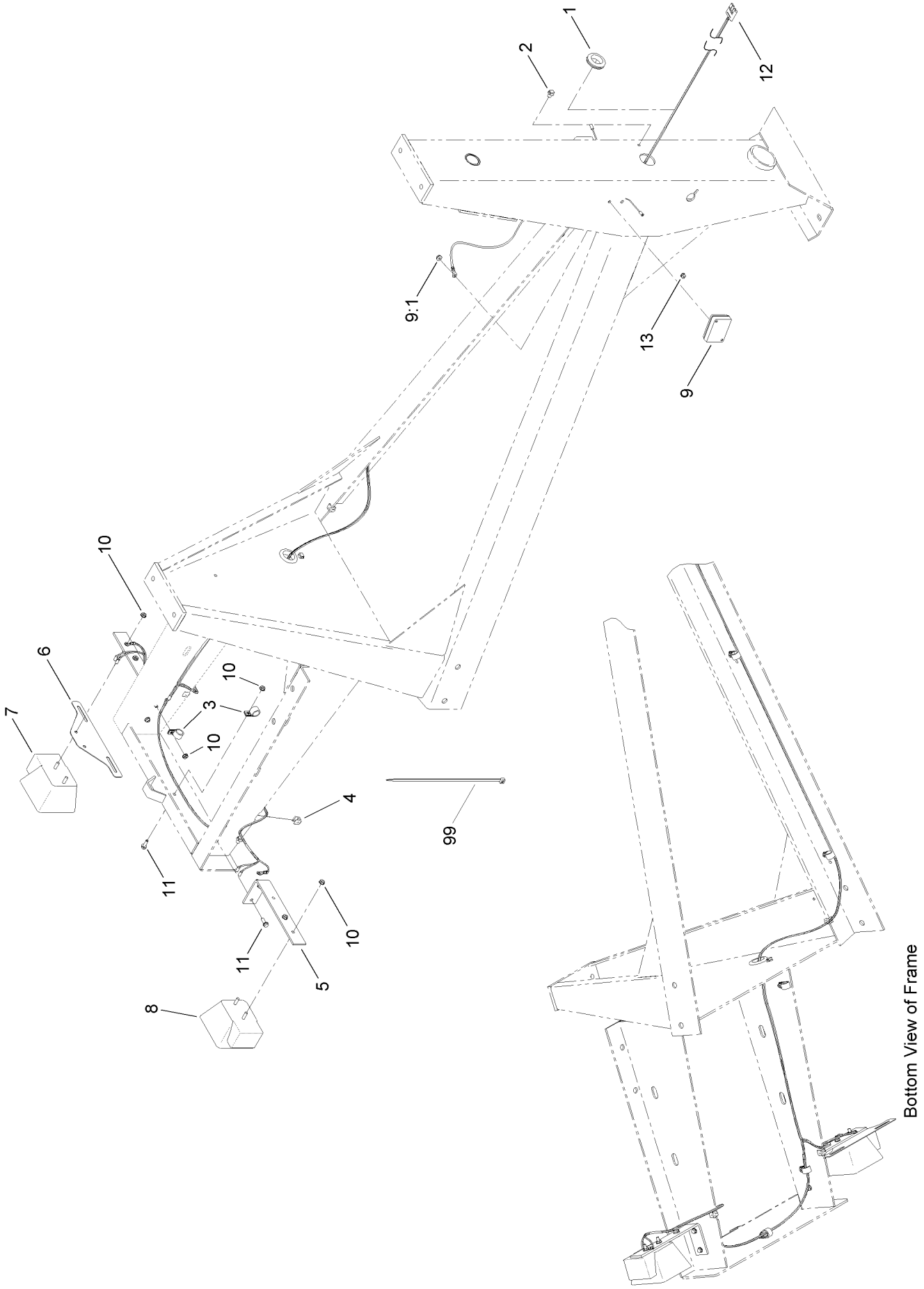

Trailer Light Assembly (continued)

Ref.	Part Number	Qty.	Description
1	120-4831	2	Grommet
2	32180-030	2	Clip-Tie
3	2412-87	7	Clamp-Cable
4	32180-078	3	Clip-Edge
5	ST36003-03	2	Bracket-Universal
6	125-8659-03	1	Holder-Plate, License
7	120-3735	1	Light-Tail, LH
8	120-3734	1	Light-Tail, RH
9	127-7562	2	Lamp-Marker, Front Side
9:1	32149-2	1	Nut-Keps
10	32149-2	13	Nut-Keps
11	115-5103	9	Screw-HHF
12	127-7567	1	Harness-Wire
13	127-7566	2	Grommet
99	3290-379	5	Tie-Cable

Attachments and Accessories

For 68004C CM-658H-S Concrete Mixer

Product Name	Model/Part
31in Forged Tow Pole Hitch	68056
31in Pintel Tow Pole Hitch	68058
31in Stamped Tow Pole Hitch	68060

Notes:



Count on it.