Form No. 3429-877 Rev A

TORO®

Count on it.

Parts Catalog

27-inch 11-Blade EdgeSeries DPA Cutting Unit

Reelmaster® 7000-D Traction Unit

Model No. 03722—Serial No. 403447001 and Up

Register at www.Toro.com.
Original Instructions (EN)

CE

3429-877 A

Ordering Replacement Parts

To order replacement parts, please supply the part number, the quantity, and the description of each part desired.

Understanding Reference Numbers

Each identified part in an illustration has a reference number. The reference number for a part also appears in the parts list, along with other information about the part.

This catalog uses two special reference number formats, one to indicate parts in a service assembly and another to indicate the quantity of a given part in an illustration.

Service Assembly Reference Numbers

Parts in service assemblies have reference numbers in the form a:b. The a represents the reference number of the entire service assembly and the b represents a sequential number unique to each part within the service assembly.

For example, a wheel assembly might be identified by reference number 6, the tire by 6:1, the valve by 6:2, and the wheel by 6:3. When you order the assembly identified by reference number 6, you receive all parts identified by reference numbers 6:1,6:2, and 6:3. However, you may also order any part individually. Reference numbers of this type appear in illustration and in parts lists.

Reference Numbers Indicating Quantity

In an illustration, if a reference number indicates more than one part, the reference number has the form nX y. The n represents the quantity of the part, the X is the multiplication symbol, and the y represents the reference number.

For example, in an illustration, the reference number 2X 37 means that two of the parts identified by reference number 37 are indicated.

Contents

Frame Assembly 4
Reel and Bedbar Assembly 6
7In EdgeSeries+ 27In Fairway, 11 Blade, Low Drag, Radial Reel Assembly No. 137-8471 8
Optional 7In EdgeSeries+ 27In Fairway, 5 Blade, Low Drag, Radial Reel Assembly No. 137-8469 9
Optional Heavy-Duty MVP Kit No. 120-7230 10
Roller Assembly 11
Long Roller Assembly No. 112-8915 12
Optional Short Roller Assembly No. 119-4286 13
Optional Full Front Roller Assembly No. 114-9383 14
Wiehle Roller Assembly No. 117-0960 15
Optional Shoulder Roller Assembly No. 119-0630 16
Optional High Height-of-Cut Assembly No. 137-0890 17
Shield Assembly 18
Optional Tools Assembly 19
Attachments and Accessories 20

© 2019—The Toro® Company
8111 Lyndale Avenue South
Bloomington, MN 55420

Contact us at www.Toro.com.
Printed in the USA.
All Rights Reserved

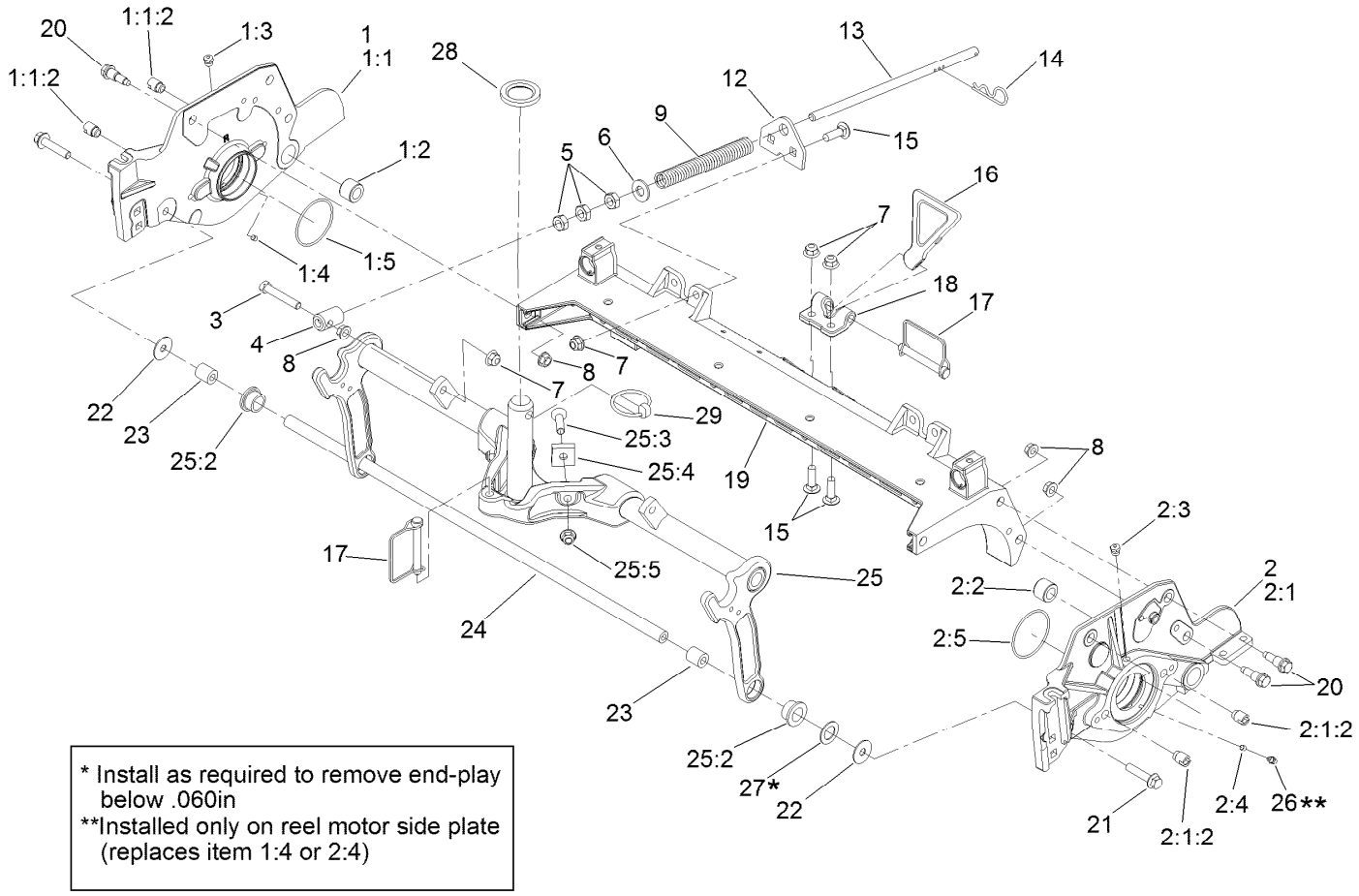

* Install as required to remove end-play below .060in
**Installed only on reel motor side plate (replaces item 1:4 or 2:4)

Frame Assembly

Ref.	Part Number	Qty.	Description
1	137-5967	1	7In RH LD Side Plate ASM
1:1		1	Side Plate-7In, RH ■
1:1:2	127-7149	2	Insert-Threaded, Side Plate
1:2	106-9618	1	Bushing-Rubber
1:3	302-39	1	Fitting-Plug
1:4	3245-35	1	Screw-Set, HSH
1:5	117-8177	1	O-Ring
2	137-5963	1	7In LH LD Side Plate ASM
2:1		1	Side Plate-7In, LH ■
2:1:2	127-7149	2	Insert-Threaded, Side Plate
2:2	106-9618	1	Bushing-Rubber
2:3	302-39	1	Fitting-Plug
2:4	3245-35	1	Screw-Set, HSH
2:5	117-8177	1	O-Ring
3	104-3396	1	Screw-HH
4	99-8662	1	Tube-Spring
5	3218-5	3	Nut-Jam
6	87-7270	1	Washer-Thrust

Ref.	Part Number	Qty.	Description
7	104-8301	5	Nut-HF, NI
8	3290-357	7	Nut-HHF, Whiz
9	119-4275	1	Spring-Compression
12	110-4069	1	Bracket
13	115-2007	1	Rod-Spring
14	92-2762	1	Pin-Hair
15	3231-25	4	Bolt-CARR
16	119-8010-03	1	Kickstand ●
17	107-7400	2	Pin-Lynch
18	110-4058	1	Bracket-Chain
19	112-8935	1	Frame-Center
20	107-2979	6	Bolt-Shoulder
21	3234-19	2	Screw-HHF
22	130-8094	2	Washer-Plain
23	108-4279	2	Spacer-Frame
24	117-3752	1	Tube-Support
25	112-8937	1	Carrier Frame ASM
25:2	93-2877	2	Bushing

● Optional Equipment

■ Not serviced separately

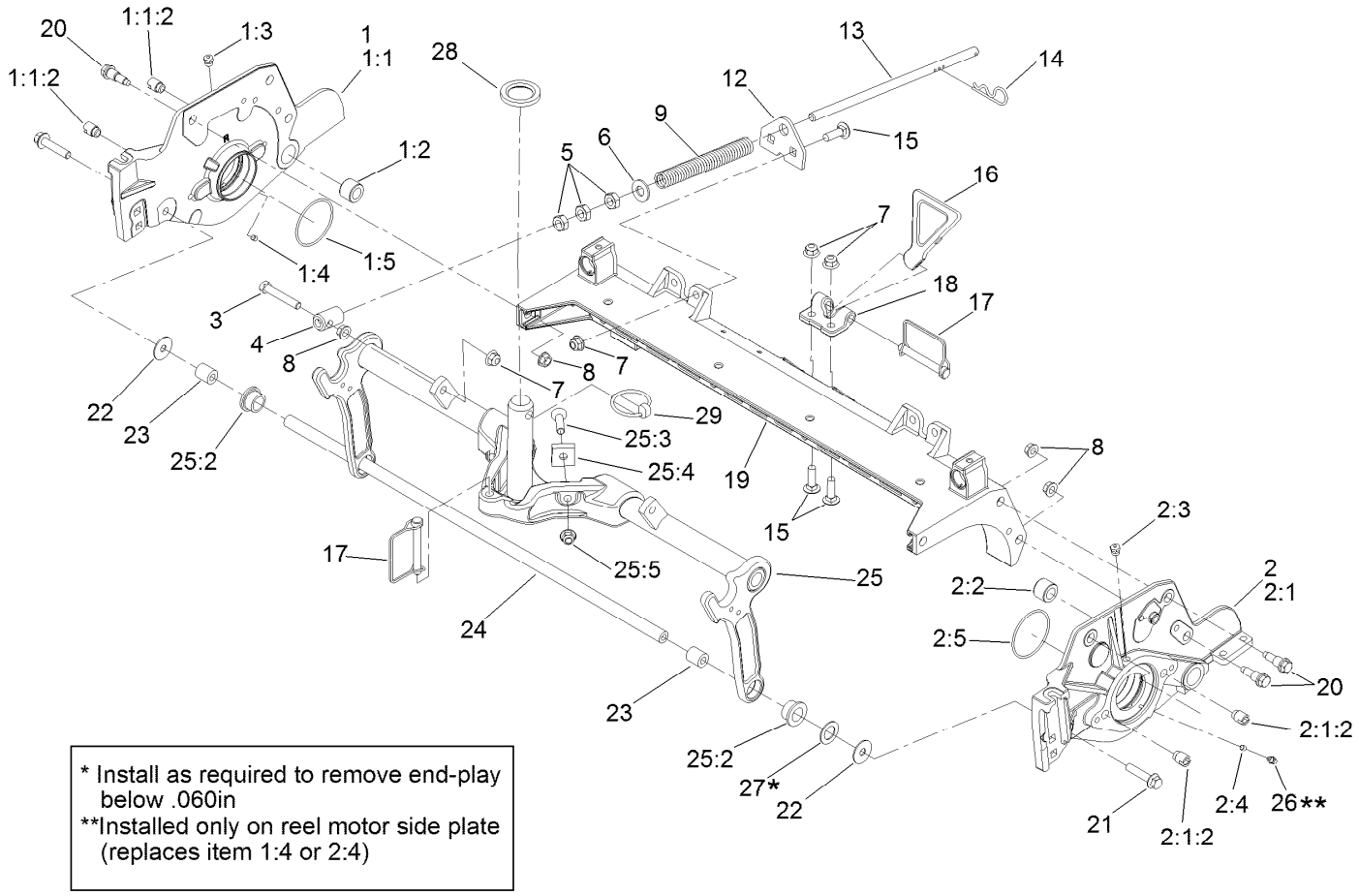

* Install as required to remove end-play below .060in
**Installed only on reel motor side plate (replaces item 1:4 or 2:4)

Frame Assembly (continued)

Ref.	Part Number	Qty.	Description
25:3	3289-17	2	Screw-FH, Hex Socket
25:4	119-1603	2	Spacer-Pivot
25:5	104-8301	2	Nut-HF, NI
26	302-5	1	Fitting-Grease
27	67-9410	1	Washer
28	94-8946	1	Washer-Thrust
29	283-71	1	Pin-Lynch

● Optional Equipment

■ Not serviced separately

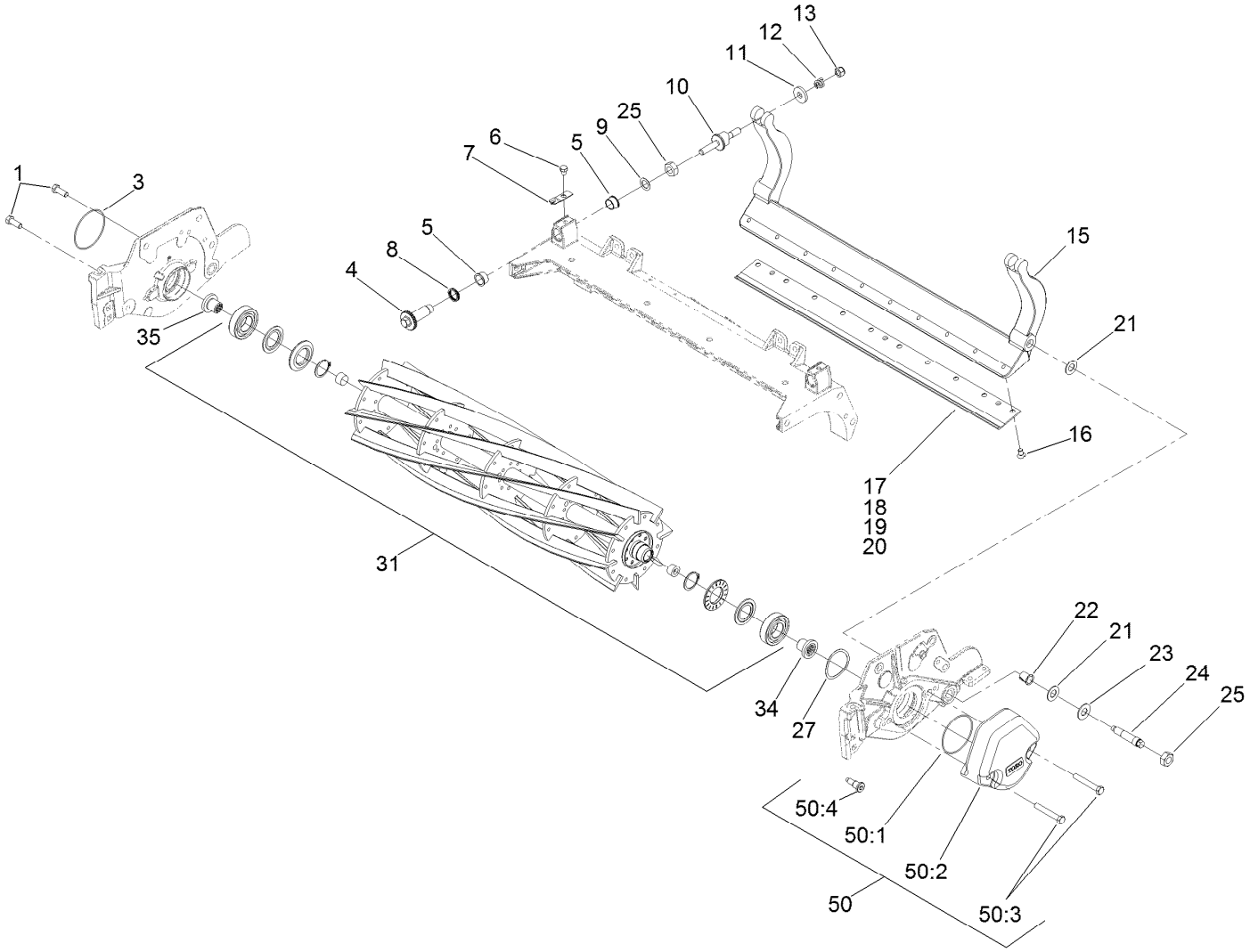

Reel and Bedbar Assembly

Ref.	Part Number	Qty.	Description
1	323-6	2	Screw-HH
3	112-6967	1	O-Ring
4	120-5118	2	Shaft-Adjuster
5	106-5344	4	Bushing-Flange, Keyed
6	119-4067	2	Screw-HH
7	99-2097	2	Detent
8	120-5116	2	Washer-Wave
9	108-0015	2	Washer-Flat
10	115-7039	2	Screw-Adjuster, Bedbar
11	119-4155	2	Washer-Hardened
12	120-5120	2	Spring-Compression
13	119-4039	2	Nut-Hex, NI
15	112-8908-01	1	Bedbar
16	119-4151	10	Screw-Bedknife
17	114-9388	1	Bedknife-STD
18	112-8910	1	Bedknife-Edgemax ■
19	114-9390	1	Bedknife-HD ■
20	120-1641	1	Bedknife-Low HOC EXT ■

Ref.	Part Number	Qty.	Description
21	61-1950	4	Washer-Plastic
22	56-9520	2	Bushing-Flanged
23	69-8980	2	Washer
24	106-9623	2	Bolt-Bedbar
25	3296-33	4	Nut-Lock, NI
27	115-5258	1	Spring-Wire, Flat
31	137-8469	1	7In Edge Series+ 27In Fairway, 5 Blade, Low Drag, Radial Reel ASM ■
31	137-8471	1	7In Edge Series+ 27In Fairway, 11 Blade, Low Drag, Radial Reel ASM
34	127-7111	1	Insert-Threaded, 7 Inch (LH)
35	127-7109	1	Insert-Threaded, 7 Inch (RH)
45	120-7230	1	HD DPA MVP Kit ● ■
50	127-7129	1	Weight Kit ■
50:1	112-6967	5	O-Ring

● Not illustrated

■ Optional Equipment

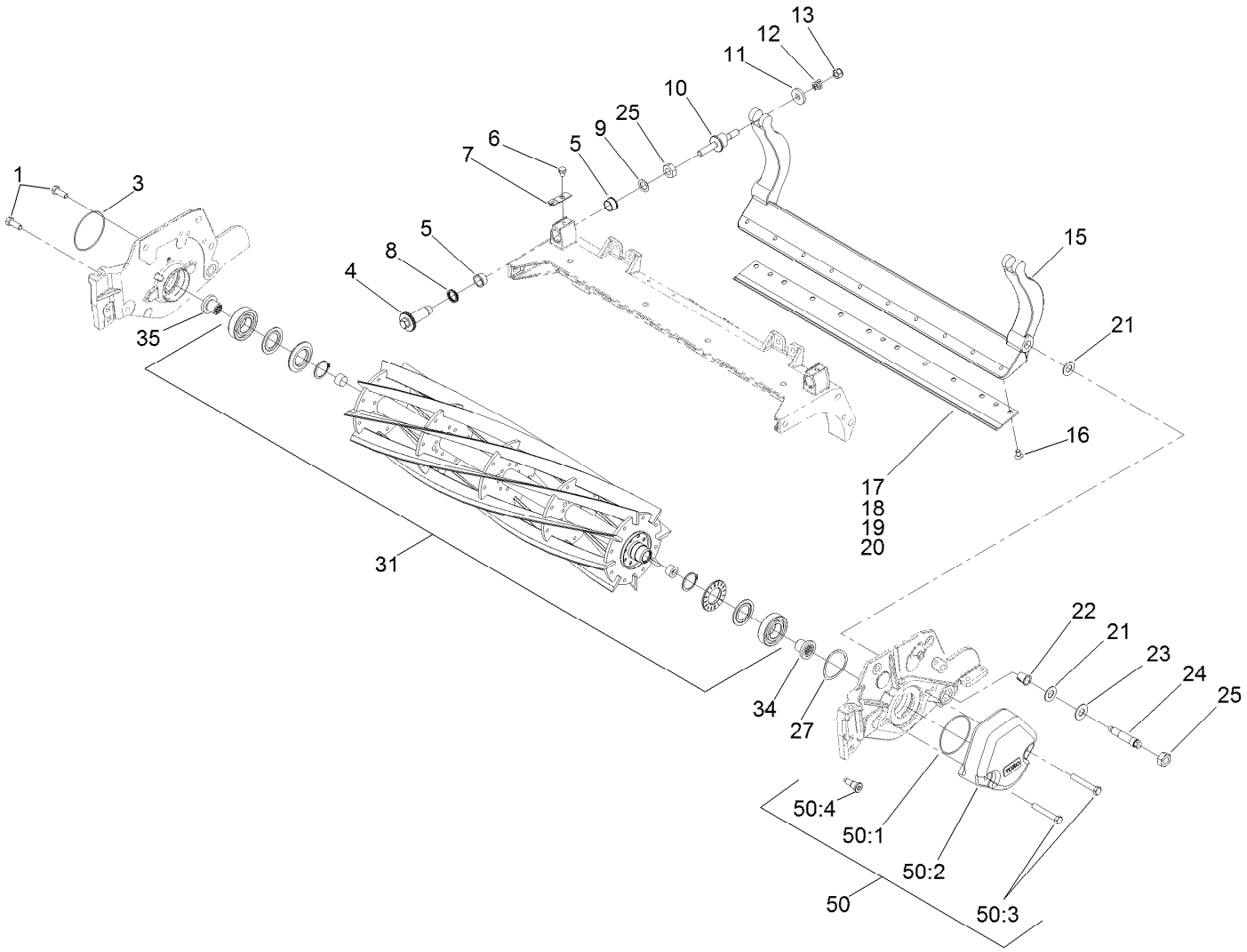

Reel and Bedbar Assembly (continued)

Ref.	Part Number	Qty.	Description
50:2	108-4269-01	5	Weight

Ref.	Part Number	Qty.	Description
50:3	323-12	10	Screw-HH
50:4	127-7122	5	Bolt-Shoulder, Flange Hex Socket

● Not illustrated

■ Optional Equipment

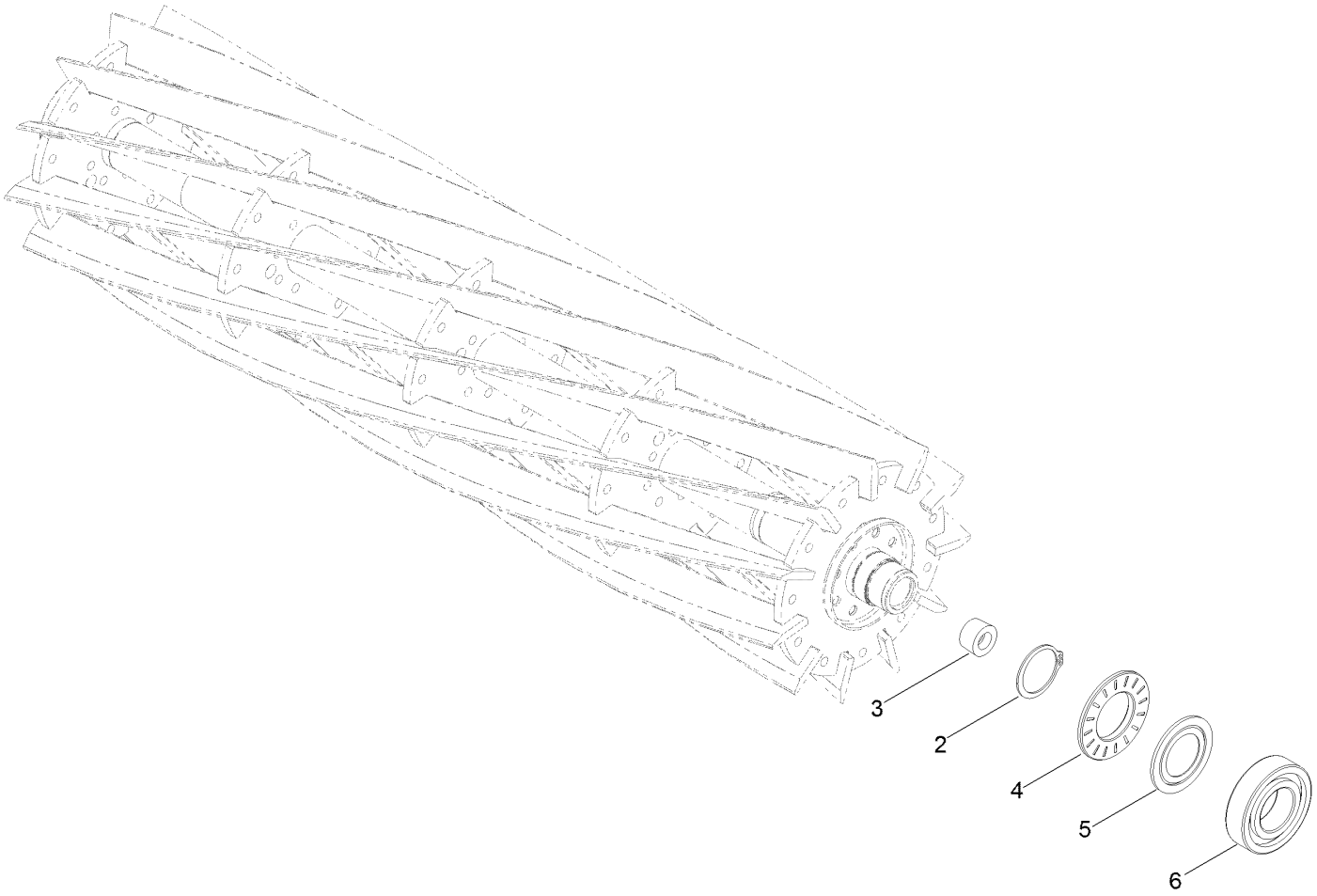

7In EdgeSeries+ 27In Fairway, 11 Blade, Low Drag, Radial Reel Assembly No. 137-8471

Ref.	*Part Number*	*Qty.*	*Description*
2	92-2601	2	Ring-Retaining
3	127-7118	2	Plug-Shaft, Reel
4	127-4284	2	Washer-Special
5	115-3299	2	Seal-Flocked
6	115-3296	2	Bearing-Sealed

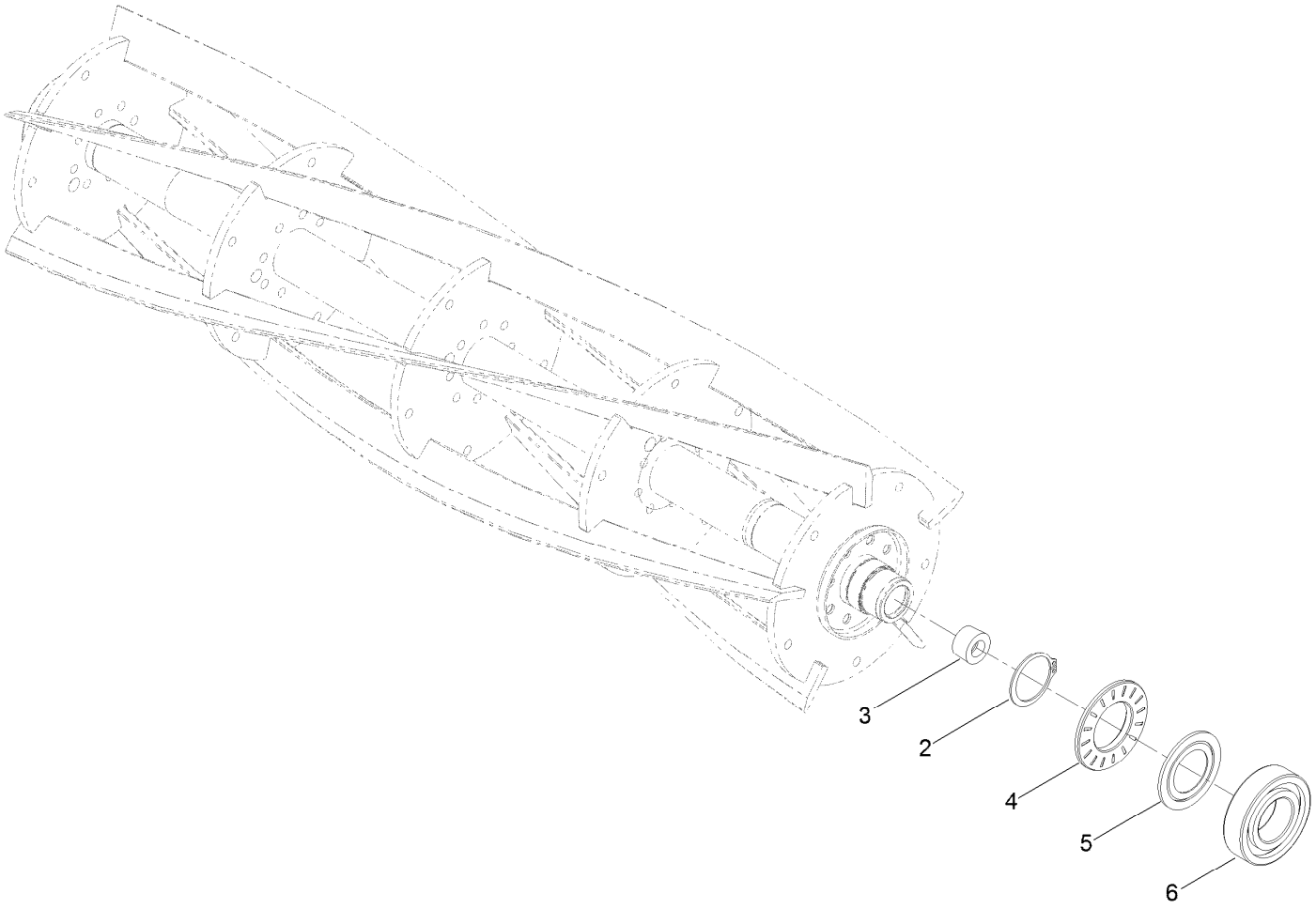

Optional 7In EdgeSeries+ 27In Fairway, 5 Blade, Low Drag, Radial Reel Assembly No. 137-8469

Ref.	*Part Number*	*Qty.*	*Description*
2	92-2601	2	Ring-Retaining
3	127-7118	2	Plug-Shaft, Reel
4	127-4284	2	Washer-Special
5	115-3299	2	Seal-Flocked
6	115-3296	2	Bearing-Sealed

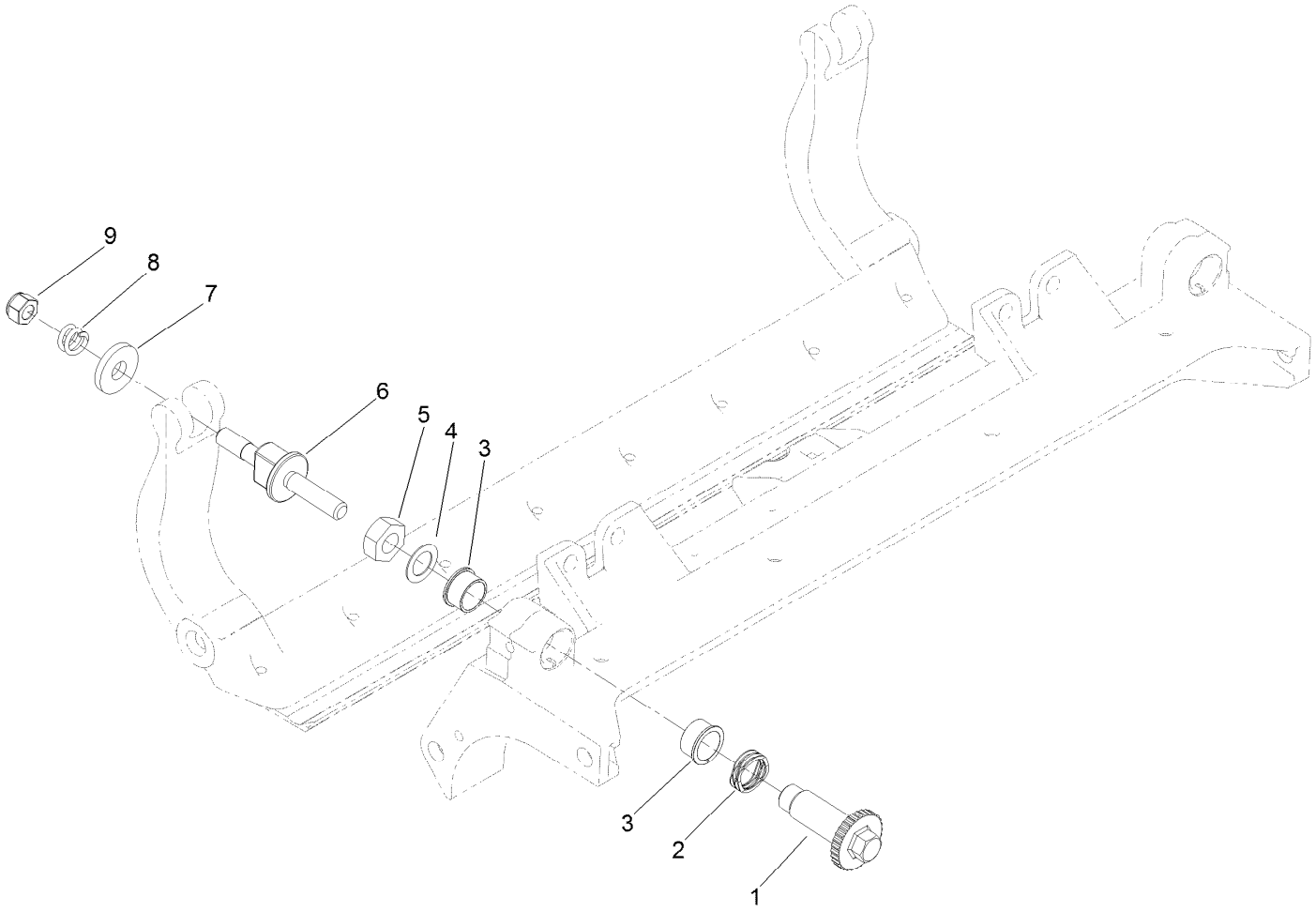

Optional Heavy-Duty MVP Kit No. 120-7230

Ref.	*Part Number*	*Qty.*	*Description*
1	120-5118	2	Shaft-Adjuster
2	120-5116	2	Washer-Wave
3	106-5344	4	Bushing-Flange, Keyed
4	108-0015	2	Washer-Flat
5	3296-33	2	Nut-Lock, NI
6	115-7039	2	Screw-Adjuster, Bedbar
7	119-4155	2	Washer-Hardened
8	120-5120	2	Spring-Compression
9	119-4039	2	Nut-Hex, NI

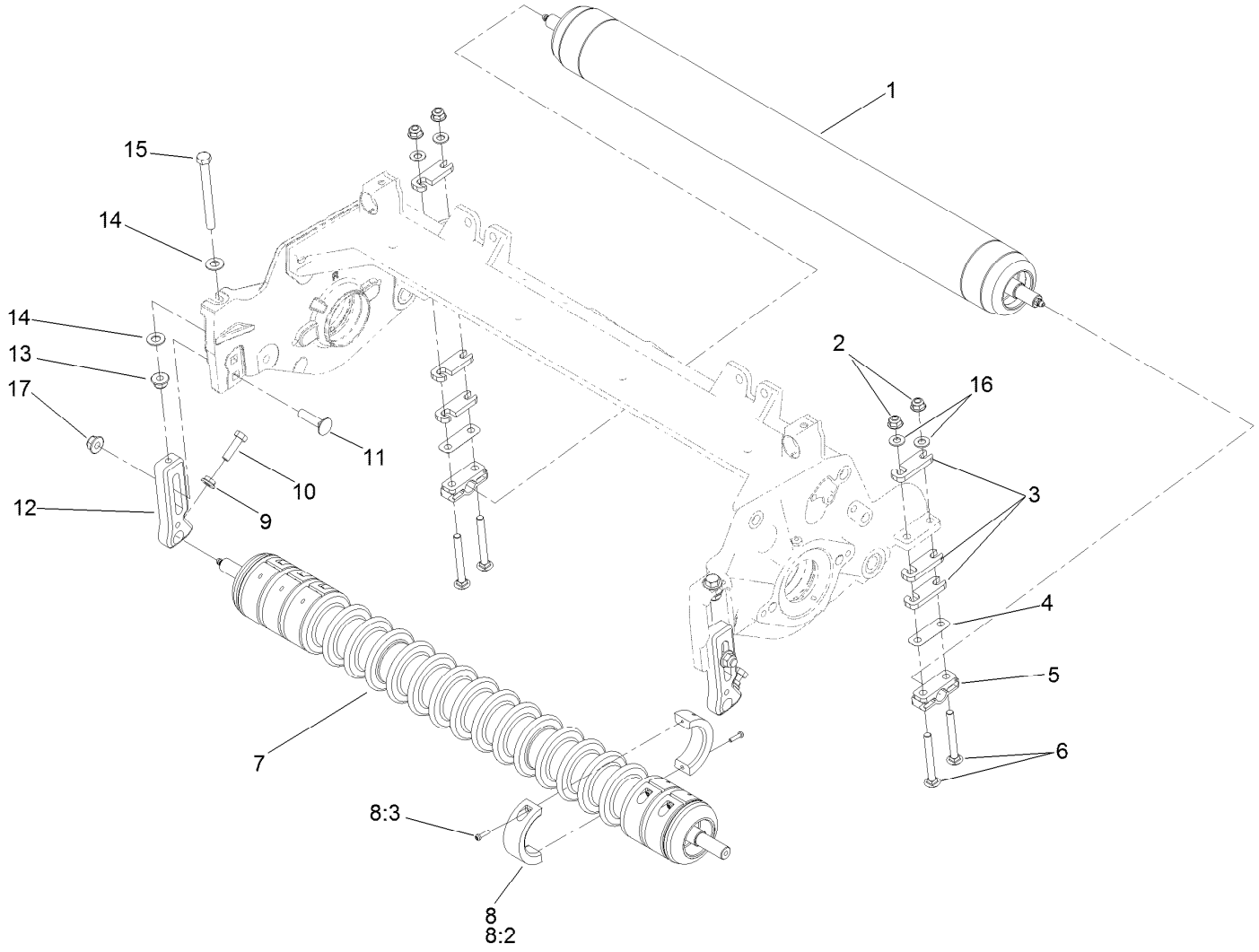

Roller Assembly

Ref.	Part Number	Qty.	Description
1	112-8915	1	Rear Roller ASM
1	119-4286	1	Rear Roller ASM (Short) ●■
2	104-8300	4	Nut-HF, NI
3	119-0626	6	Shim-Roller
4	107-4001	2	Shim-Roller (0.01 Inch) ■
5	106-3924	2	Bracket-Roller, Rear
6	3230-9	4	Screw-CARR
7	114-9383	1	Full Front Roller ASM (3Inch DIA) ●■
7	117-0960	1	Plastic Wiehle Roller ASM
7	119-0630	1	Plastic Shoulder Roller ASM ●■
8	119-0649	1	Trim/HD Collar Kit ■
8:2	119-1604	2	Collar-Trim/HD
8:3	104-1835	2	Screw
9	32128-20	2	Nut-HF
10	322-16	2	Screw-HH
11	3231-4	2	Screw-CARR
12	125-2796	2	Bracket-Front HOC
13	104-8301	2	Nut-HF, NI
14	48-9220	4	Washer-Plain
15	133-7571	2	Screw-HOC, Fairway
16	94-6936	4	Washer-Hardened
17	133-7570	2	Nut-Flange, NI
50	137-0890	1	Rm DPA High HOC Kit (F18 & Up) ●■

● Not illustrated

■ Optional Equipment

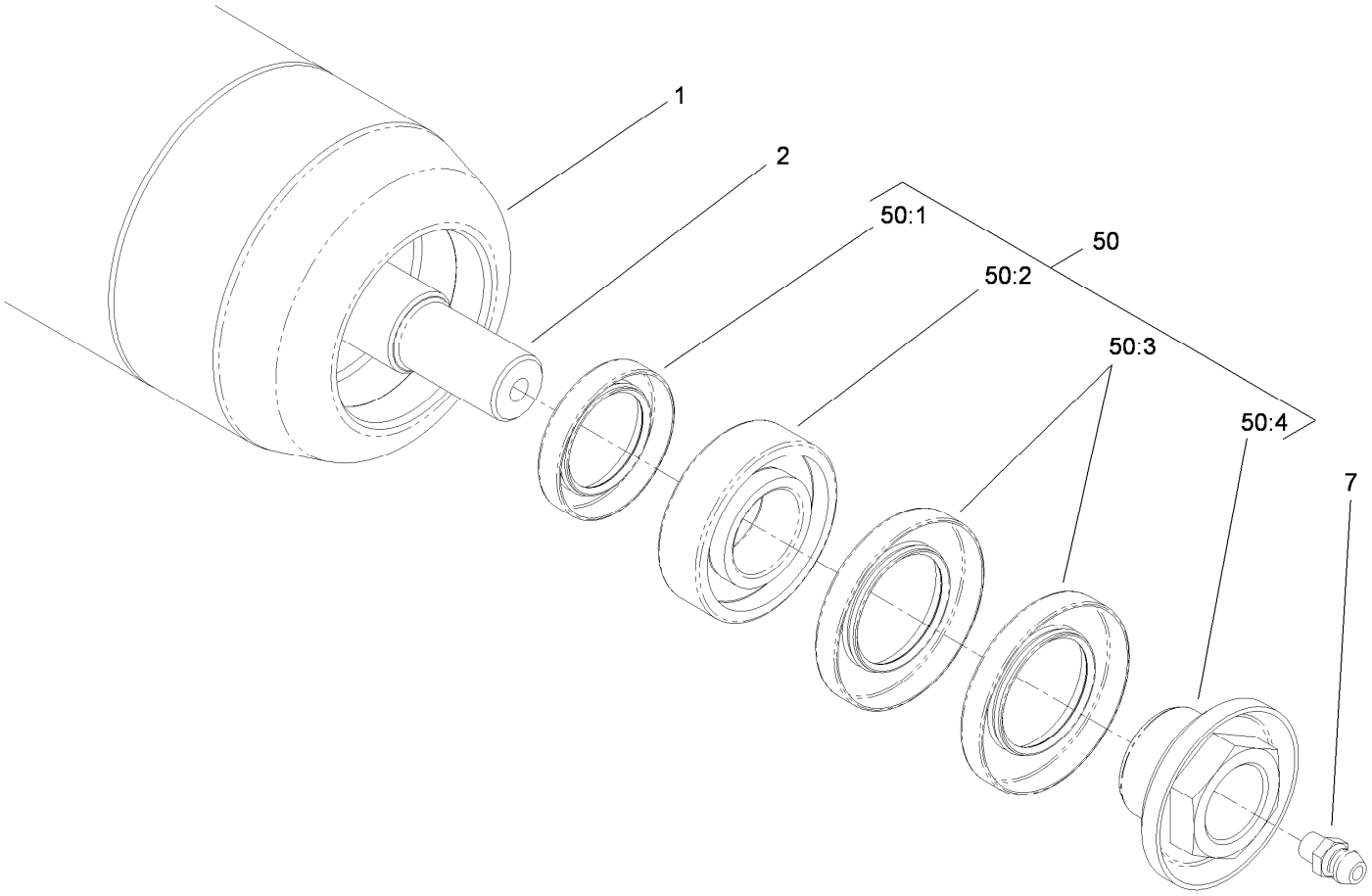

Long Roller Assembly No. 112-8915

Ref.	*Part Number*	*Qty.*	*Description*
1	112-8916-03	1	Tube-Roller, Long
2	112-8918	1	Shaft-Long, Rear Roller
7	302-5	2	Fitting-Grease
50	114-5430	1	Roller Rebuild Kit
50:1	114-3717	2	Seal-Oil
50:2	112-5290	2	Bearing-Steel, Stainless
50:3	112-7494	4	Seal
50:4	114-3745	2	Nut-Lock, Bearing

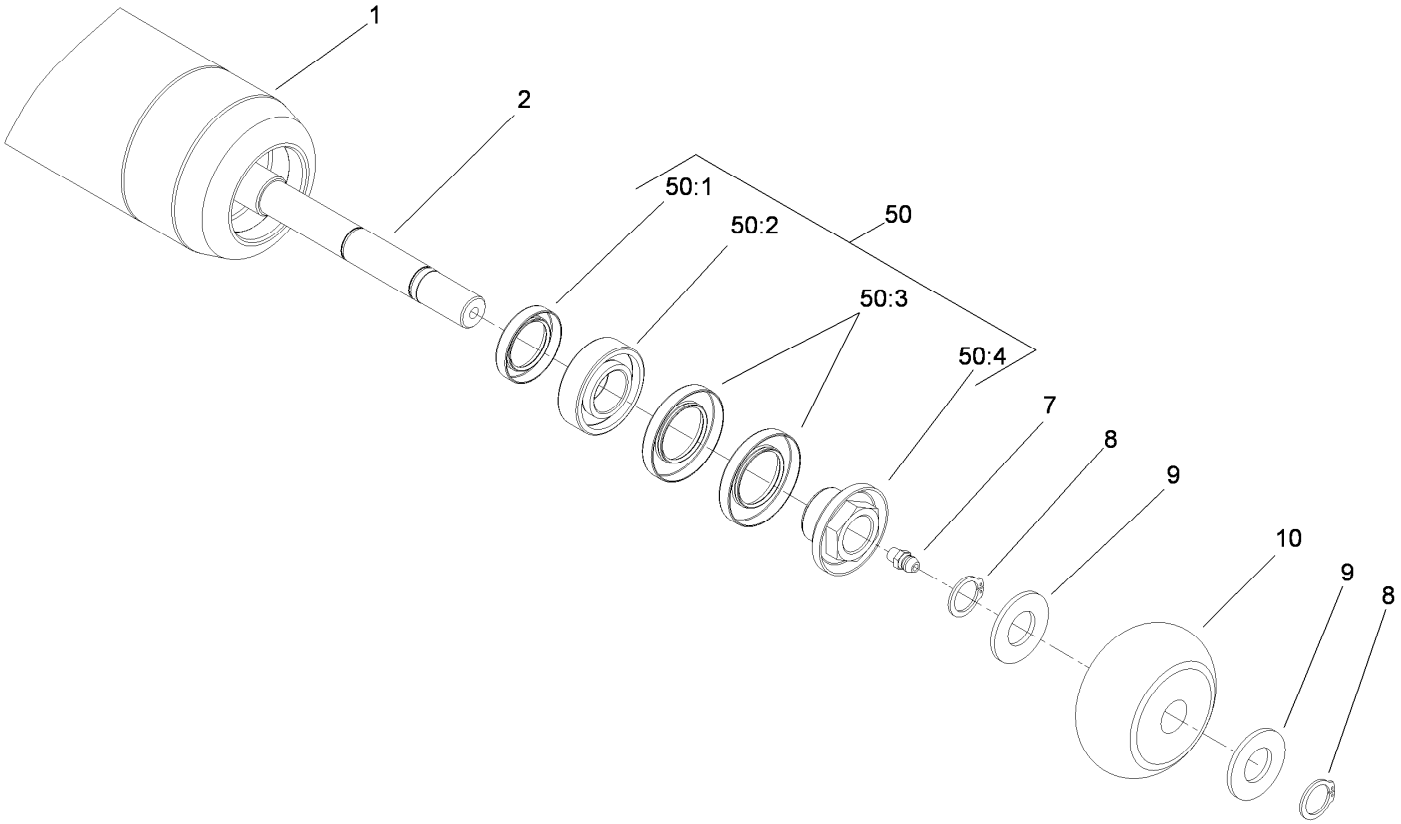

Optional Short Roller Assembly No. 119-4286

Ref.	*Part Number*	*Qty.*	*Description*
1	115-8296-03	1	Tube-Roller (Short)
2	119-4287	1	Shaft-Rear Roller, 27 Inch
7	302-5	2	Fitting-Grease
8	32151-62	4	Ring-Retaining
9	119-1868	4	Washer
10	119-4276	2	Roller-Tipper
50	114-5430	1	Roller Rebuild Kit
50:1	114-3717	2	Seal-Oil
50:2	112-5290	2	Bearing-Steel, Stainless
50:3	112-7494	4	Seal
50:4	114-3745	2	Nut-Lock, Bearing

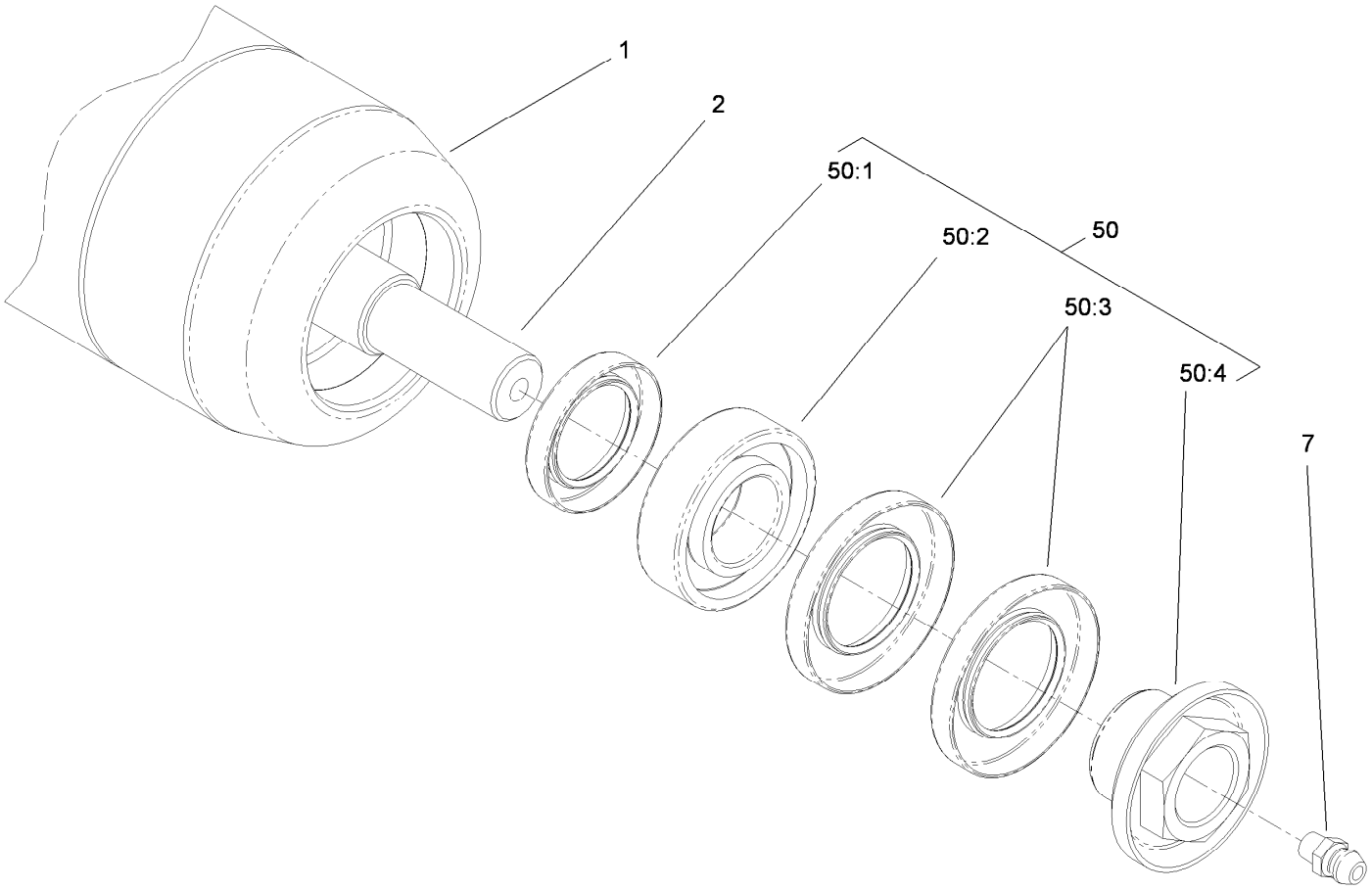

Optional Full Front Roller Assembly No. 114-9383

Ref.	*Part Number*	*Qty.*	*Description*
1	112-8916-03	1	Tube-Roller, Long
2	117-0957	1	Shaft-Roller, Wiehle
7	302-5	2	Fitting-Grease
50	114-5430	1	Roller Rebuild Kit
50:1	114-3717	2	Seal-Oil
50:2	112-5290	2	Bearing-Steel, Stainless
50:3	112-7494	4	Seal
50:4	114-3745	2	Nut-Lock, Bearing

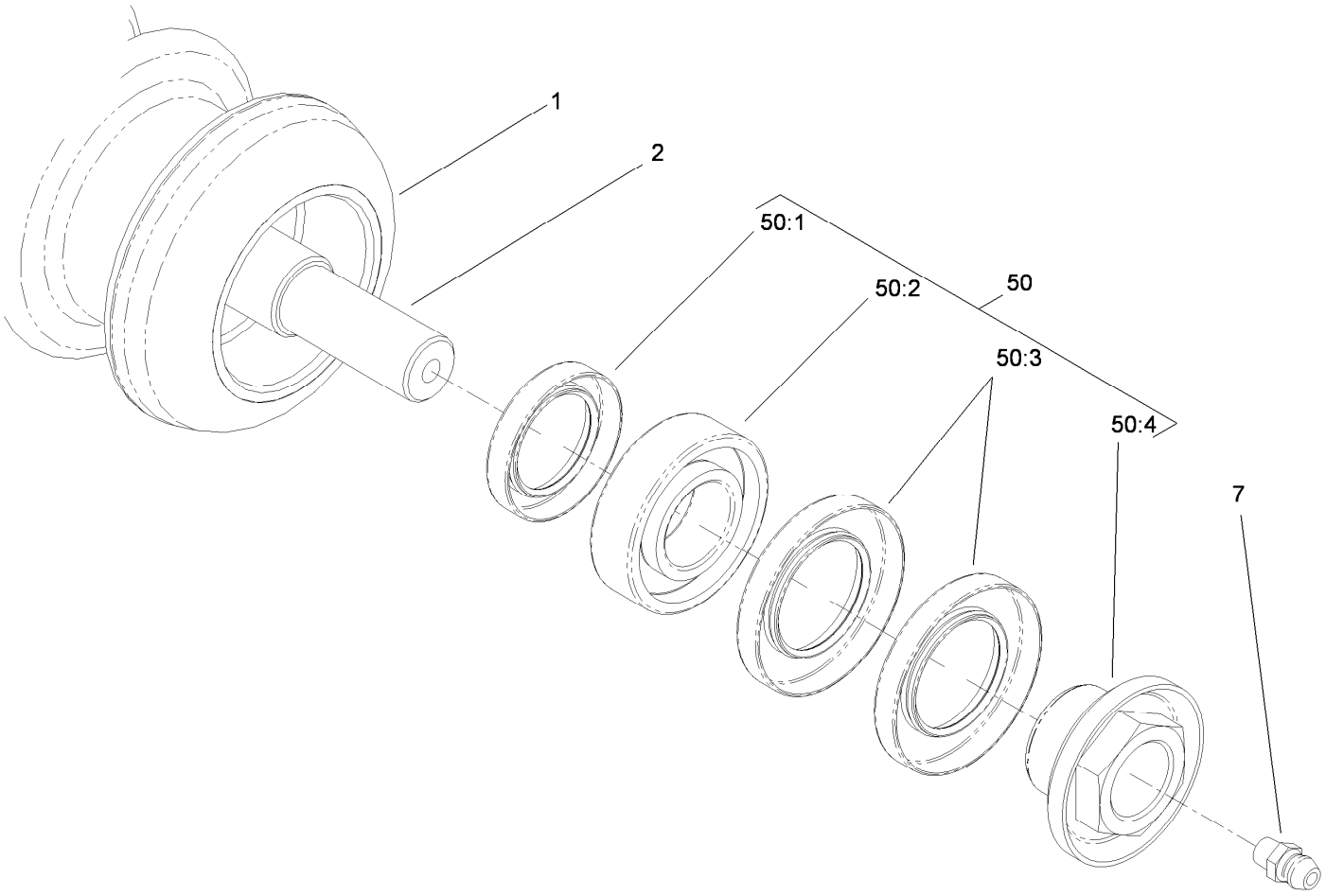

Wiehle Roller Assembly No. 117-0960

Ref.	*Part Number*	*Qty.*	*Description*
1	117-0959	1	Roller-Wiehle, Plastic
2	117-0957	1	Shaft-Roller, Wiehle
7	302-5	2	Fitting-Grease
50	114-5430	1	Roller Rebuild Kit
50:1	114-3717	2	Seal-Oil
50:2	112-5290	2	Bearing-Steel, Stainless
50:3	112-7494	4	Seal
50:4	114-3745	2	Nut-Lock, Bearing

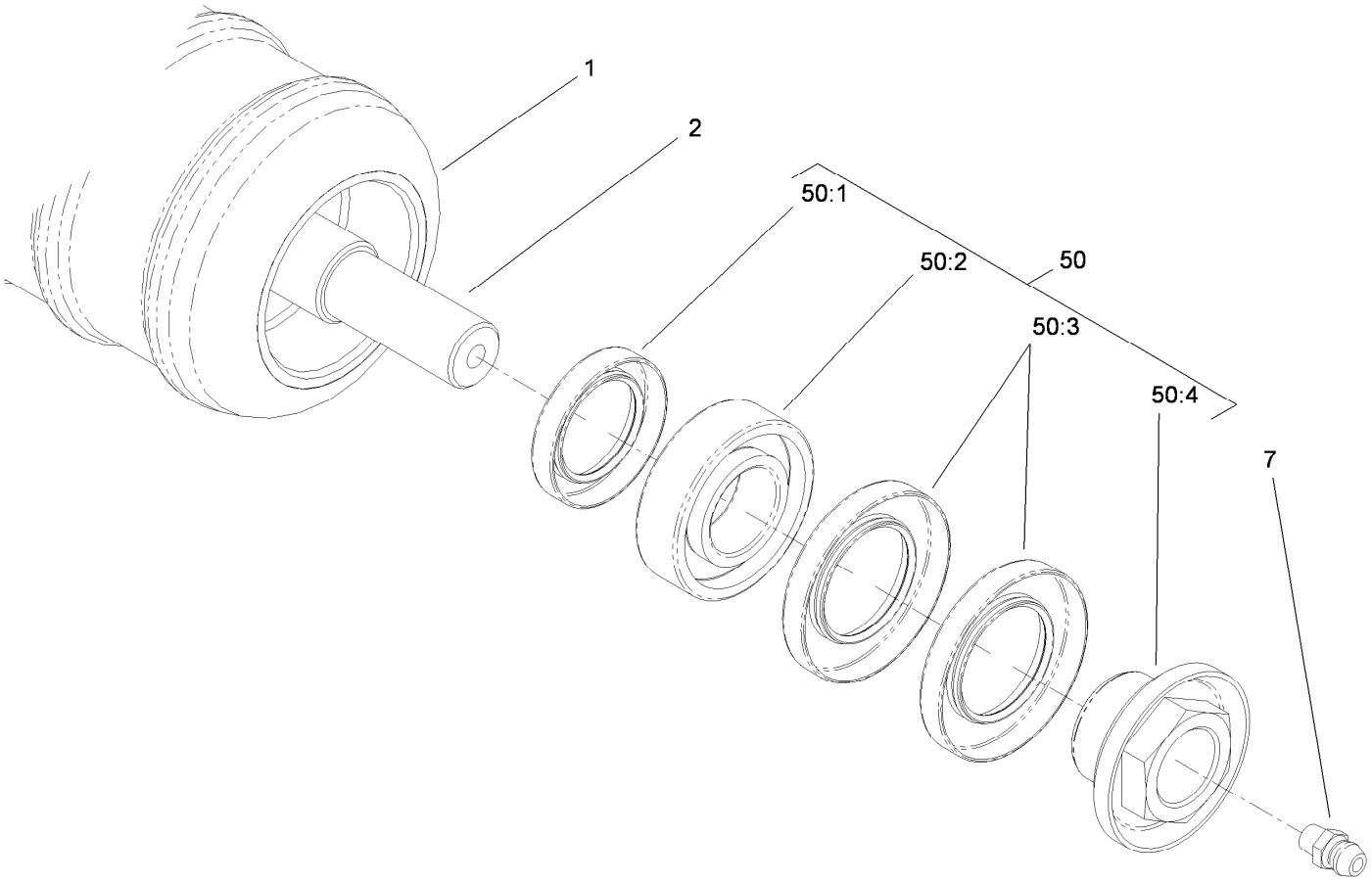

Optional Shoulder Roller Assembly No. 119-0630

Ref.	*Part Number*	*Qty.*	*Description*
1	119-0631	1	Roller-Shoulder, Plastic
2	117-0957	1	Shaft-Roller, Wiehle
7	302-5	2	Fitting-Grease
50	114-5430	1	Roller Rebuild Kit
50:1	114-3717	2	Seal-Oil
50:2	112-5290	2	Bearing-Steel, Stainless
50:3	112-7494	4	Seal
50:4	114-3745	2	Nut-Lock, Bearing

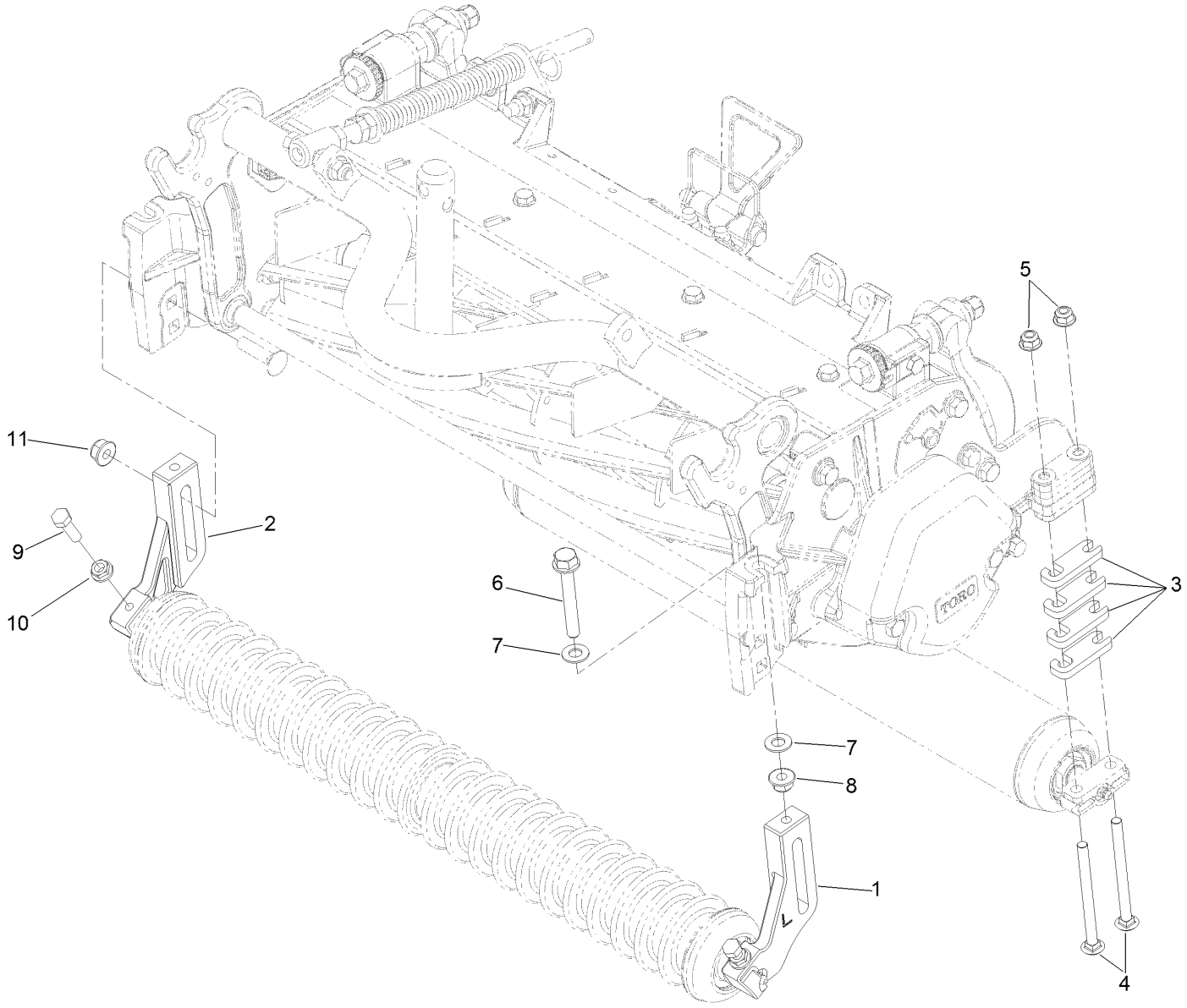

Optional High Height-of-Cut Assembly No. 137-0890

Ref.	*Part Number*	*Qty.*	*Description*
1	120-0404	1	Bracket-High HOC (LH)
2	120-0405	1	Bracket-High HOC (RH)
3	119-0626	8	Shim-Roller
4	106-9758	4	Screw-CARR
4	3230-30	4	Screw-CARR
5	104-8300	4	Nut-HF, NI
6	133-7572	2	Screw-HOC
7	48-9220	4	Washer-Plain
8	104-8301	4	Nut-HF, NI
9	322-16	2	Screw-HH
10	32128-20	2	Nut-HF
11	133-7570	2	Nut-Flange, NI

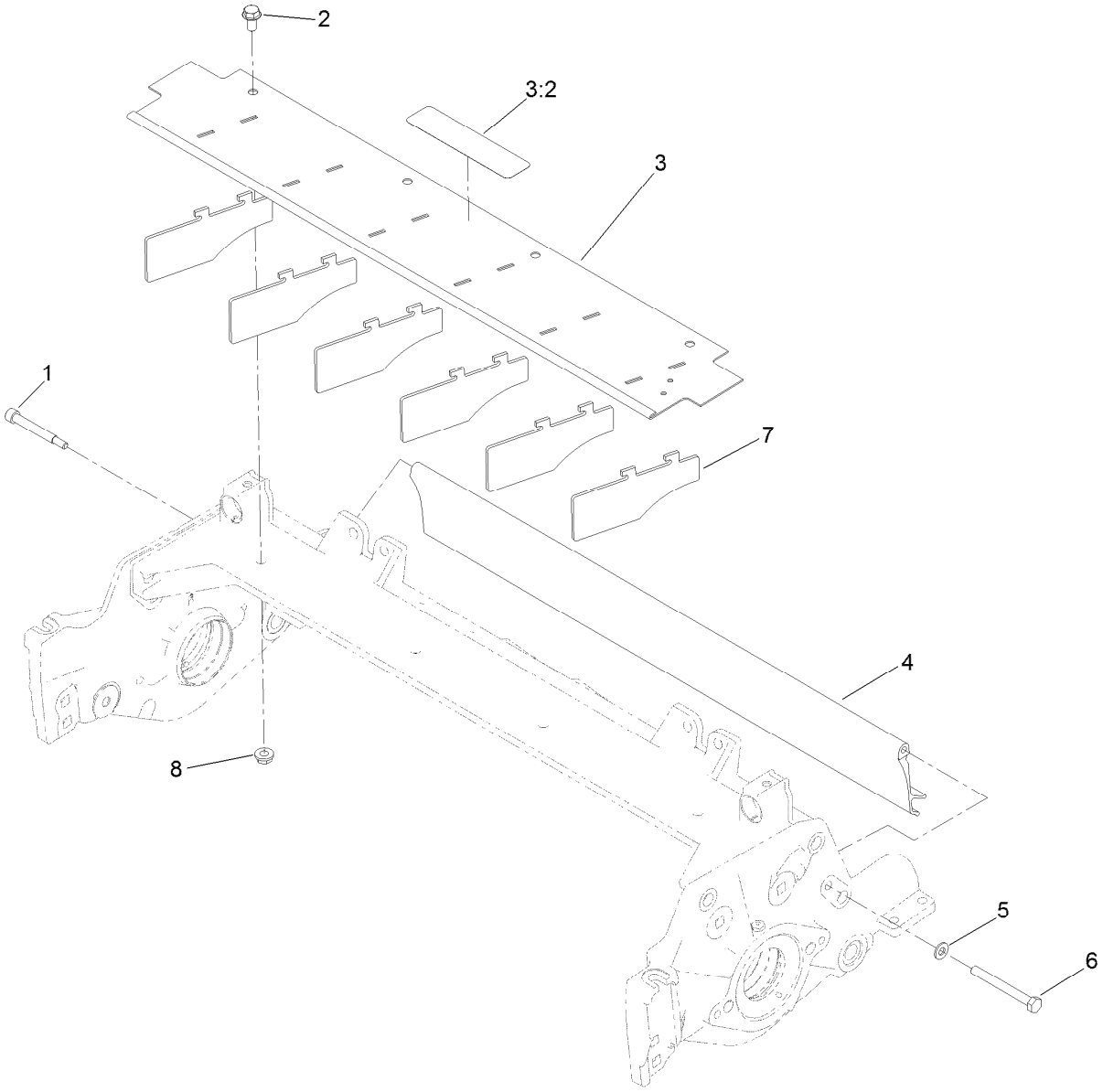

Shield Assembly

Ref.	*Part Number*	*Qty.*	*Description*
1	107-7773	1	Screw-HSH
2	3234-7	4	Screw-HHF
3	112-8942	1	Front Grass Shield ASM
3:2	93-6688	1	Decal-Danger
4	125-1997	1	Shield-Grass, Rear
5	3256-74	1	Washer-Flat
6	322-14	1	Screw-HH
7	110-1706	6	Deflector
8	32128-20	4	Nut-HF

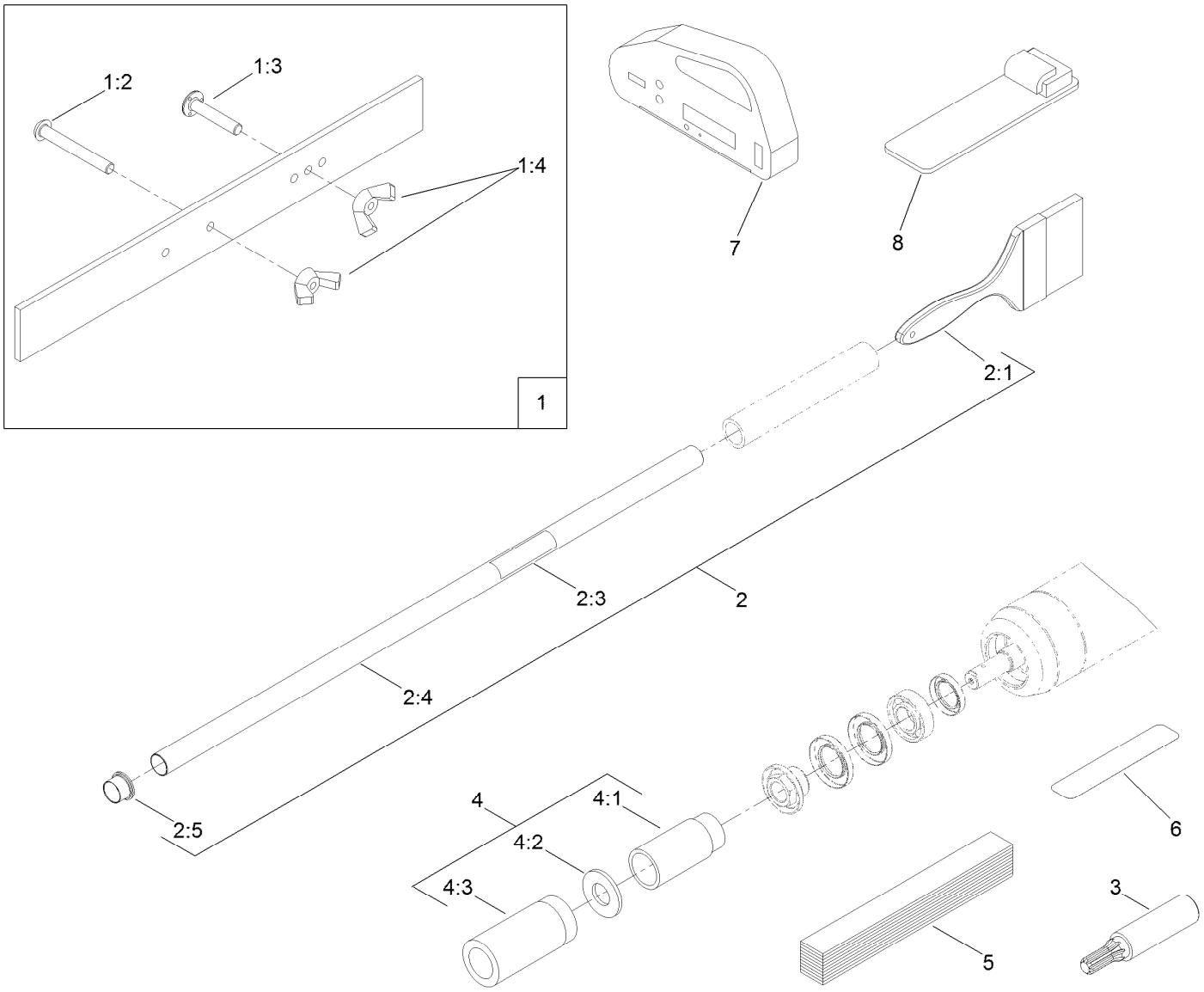

Optional Tools Assembly

Ref.	Part Number	Qty.	Description
1	108-6715	1	Gauge Bar ASM
1:2	32122-54	1	Screw-Head, Truss
1:3	108-6714	1	Stud-Weld
1:4	32103-3	2	Nut-Wing
2	29-9100	1	Brush And Handle ASM
2:1	36-4310	1	Brush
2:3	98-3206	1	Decal
2:4	29-9080	1	Handle
2:5	2410-18	1	Cap-Plastic

Ref.	Part Number	Qty.	Description
3	TOR4074	1	Adapter-Drive, Reel ●
4	115-0803	1	Roller Rebuild Tool Kit
4:1	115-0852	1	Tool-Inner Seal
4:2	107-8133	1	Washer-Flat
4:3	115-0853	1	Tool-Bearing/Outer Seals
5	125-5610	1	Paper-Reel, Toro (10 Pack)
6	125-5611	1	Shim-Toro Reel (0.002 Inch)
7	131-6828	1	Indicator-Angle
8	131-6829	1	Mount-Indicator, Angle

● Obtain directly from K-Line Industries, Inc. (800) 241-0936

Attachments and Accessories

For 03722 27-inch 11-Blade EdgeSeries DPA Cutting Unit Reelmaster 7000-D Traction Unit

Product Name	Model/Part
27in Verticutter Cutting Unit	03731
27in RRB Only Kit	03243
Weight Kit for 8-Blade or 11-Blade DPA Cutting Unit with 7in Reel Traction Unit	03405
Rear Roller Brush Kit with 7in Reel and Universal Groomer (27in)	03242
Universal Groomer Drive Kit	03768
Universal Groomer Cartridge (27in)	03778
Broomer Kit (27in)	133-8222
EdgeSeries+ 27in Fairway, 5 Blade, Low Drag, Radial Reel	137-8469
7in EdgeSeries + 27In Fairway, 11 Blade, Low Drag, Radial Reel Assembly	137-8471
Rear Roller Scraper Kit	114-9368
Wiehle Scraper ASM	114-9372-03
Comb/Scraper Kit	114-9376
Full Front Roller Scraper ASM (3in dia)	114-9386-03
Shoulder Scraper ASM	114-9381-03
Rear Roller ASM (short)	119-4286
Full Front Roller ASM (3in dia)	114-9383
Plastic Shoulder Roller ASM	119-0630
Brush-Roller (High HOC)	115-0838
HD Brush-Rear Roller (27 inch)	137-0844
Trim/Heavy-Duty Collar Kit	119-0649
High Height-of-Cut Kit, Reelmaster 3000 or 5000 Series DPA Cutting Unit	137-0890
Roller Rebuild Kit	114-5430
Roller Rebuild Tool Kit	115-0803
Cutting Unit Kickstand	119-8010-03
Reel Drive Adapter	TOR4074
Gauge Bar Assembly	108-6715
Brush and Handle Kit	29-9100
Groomer/RRB Seal Kit	131-3233
Heavy-Duty DPA MVP Kit	120-7230
Rear Roller Adjustment Kit	125-0570
Bedknife-std (fairway)	114-9388
Edgemax Bedknife	112-8910
Low HOC Extended Bedknife	120-1641
Bedknife-HD	114-9390
LH 7in Heavy Duty Low Drag Side Plate ASM	137-5982
RH 7in Heavy Duty Low Drag Side Plate ASM	137-5983
Turf Evaluator	04399
Toro Reel Paper (10 Pack)	125-5610
Toro Reel Shim (0.002in)	125-5611
Angle Indicator	131-6828
Angle Indicator Mount	131-6829

Notes:

Notes:

Notes:



Count on it.