PART NO. 100−1592	PARTS CATALOG

CLEVIS HITCH LIFT CABLE KIT

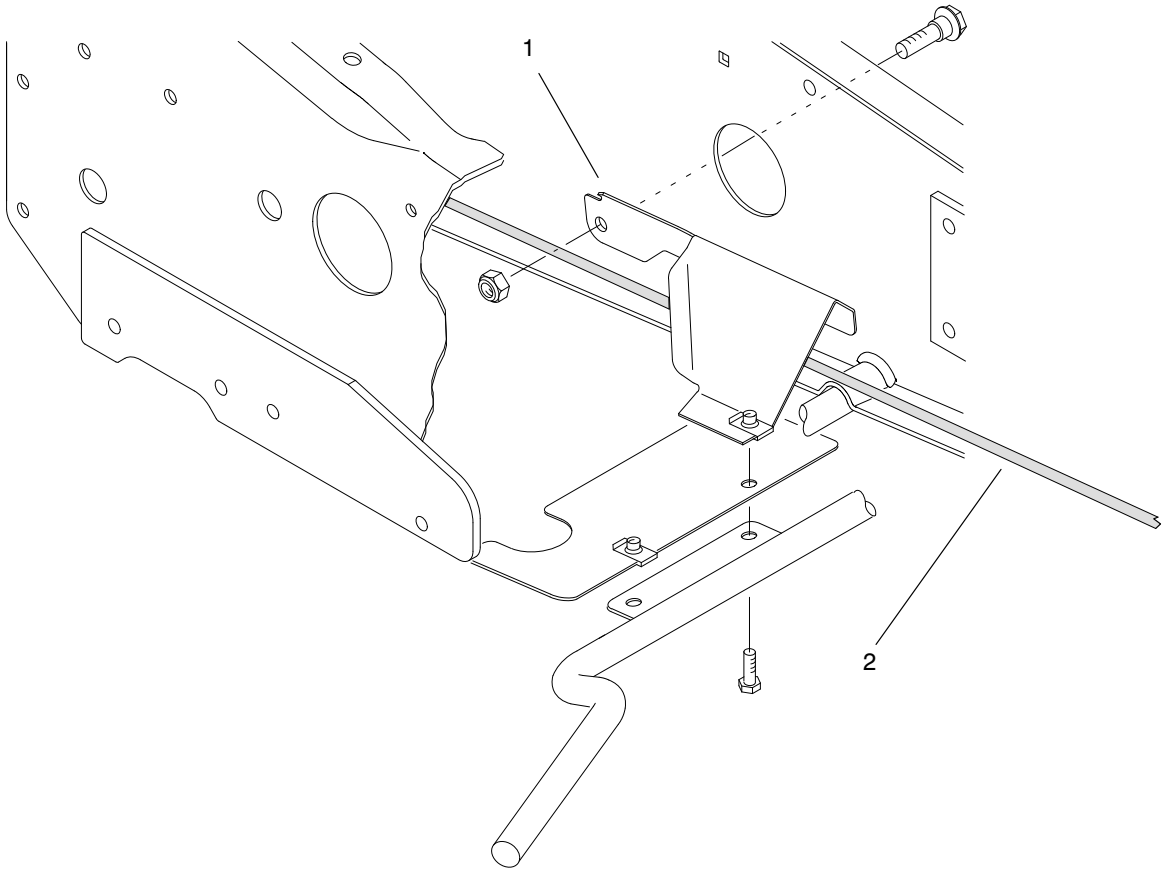

C−2827

CABLE GUIDE ASSEMBLY

Ref. No.	Part No.	Description	No. Used
1	100−1581	Cable Guide	1
2	3322−563	Clevis Lift Cable ASM	1

Ref. No.	Part No.	Description	No. Used

PROTOTYPE

© The TORO Company − 1999
All Rights Reserved