Form No. 3322–793

CCR ™ 1000
CCR ™ 1000E
Snowthrower

Model No. 38400—200000001 and Up
Model No. 38405—200000001 and Up

Parts Catalog

Ordering Replacement Parts

To order replacement parts, please supply: the part number, the quantity, and the description of each part desired.

Understanding Reference Numbers

Each identified part in an illustration has a reference number. The reference number for a part also appears in the parts list, along with other information about the part.

This catalog uses two special reference number formats, one to indicate parts in a service assembly and another to indicate the quantity of a given part in an illustration.

Service Assembly Reference Numbers

Parts in service assemblies have reference numbers in the form **a:b.** The **a** represents the reference number of the entire service assembly and the **b** represents a sequential number unique to each part within the service assembly.

For example, a wheel assembly might be identified by reference number **6**, the tire by **6:1**, the valve by **6:2**, and the wheel by **6:3**. When you order the assembly identified by reference number 6, you receive all parts identified by reference numbers 6:1, 6:2, and 6:3. However, you may also order any part individually.

Reference numbers of this type appear in illustrations and in part lists.

Reference Numbers Indicating Quantity

In an illustration, if a reference number indicates more than one part, the reference number has the form **nX y.** The **n** represents the quantity of the part, the **X** is the multiplication symbol, and the **y** represents the reference number.

For example, in an illustration, the reference number **2X 37** means that two of the parts identified by reference number 37 are indicated.

© The TORO Company — 1999
All Rights Reserved

Contents

Description	Page
Deflector & Control Panel Assembly	3–4
Housing & Side Plate Assembly	5
Engine & Gas Tank Assembly	6–7
Handle Assembly	8
Rotor Assembly	9
Motor & Switch Housing Assembly (Model No. 38405) (120 Volt)	10
Carburetor No. 640086	11
Engine Tecumseh Model No. HSK635–1721A	12–13
Recoil Starter No. 590743	14
Maintenance	15

Accessories

Description	Model / Part No.	Description	Model / Part No.

Part Description Abbreviations

Part descriptions in this catalog may include the following abbreviations.

Abbreviation	Meaning
AR	as required
ASM	assembly
CARR	carriage
DEG	degrees
FH	flat head
GA	gauge
HF	hex flange
HH	hex head
HHF	hex head flange
HLH	hex lag head
HJ	hex jam
HOC	height-of-cut
HS	hex socket
HSBH	hex socket button head
HSFH	hex socket flat head
HSH	hex socket head
HWH	hex washer head
HWHTF	hex washer head thread forming
INC	incorporated
LH	left hand
NI	nylon insert
PPH	Phillips pan head
PTH	Phillips truss head
PTO	power take off
RH	right hand
SFH	slotted fillister head
SHH	slotted hex head
SQH	square head
SHWH	slotted hex washer head
SPH	slotted pan head
SRH	slotted round head
STD	standard
TAP	self tapping
TTH	Torx truss head
WH	wing head

3322–793

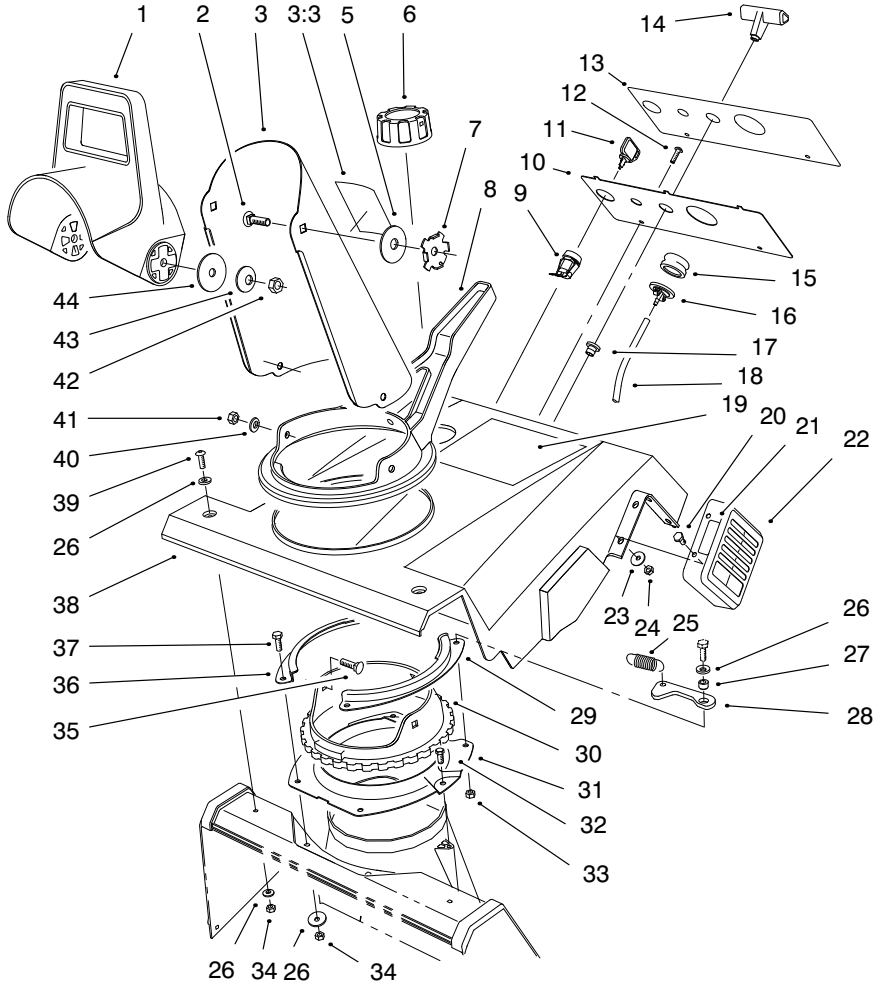

Sheet No.:2

Deflector & Control Panel Assembly

Ref. No.	Part No.	Qty.	Description
1	56–2680	1	Chute–Deflector
2	3230–22	2	Screw–CARR
3	94–2790	1	ASM – Chute w/Decal
3:3	94–2900	1	Decal – Danger Discharge
5	20–4320	2	Washer–Rubber
6	55–3573	1	ASM–Gas Cap
7	55–8950	2	Plate–Friction
8	71–4940	1	Chute – Handle
9	40–5940	1	On–Off Switch
10	71–5240–03	1	Control Panel (only on: 38400)
10	71–5241–03	1	Control Panel (only on: 38405)
11	63–8360	1	Key–Ignition w/Shield
12	32144–53	2	Screw–Self TAP
13	88–1030	1	Decal – Control Panel (only on: 38405)
13	88–1020	1	Decal – Control Panel (only on: 38400)
14	92–4853	1	Handle–Starter
15	66–7460	1	Bulb–Primer
16	44–2750	1	Body–Primer
17	23–7470	1	Starter Rope Guide
18	44–3173	1	Primer Hose

Ref. No.	Part No.	Qty.	Description
19	100–3557	1	Decal–Ccr1000 (only on: 38400)
19	100–3558	1	Decal–Ccr1000e (only on: 38405)
20	3290–359	4	Screw–HWH
21	95–1904	1	Decal – Hot
22	71–5340–03	1	Muffler Guard
23	3256–61	4	Washer–Flat
24	3296–2	4	Nut–Lock Ni
25	80–4600	1	Spring – Detent
26	3256–22	7	Washer–Flat
27	55–9370	1	Rotor Bld Spacer
28	80–4610	1	Detent
29	71–4980–03	1	LH Chute Ring Retr
30	71–4950	1	Gear Ring, Chute
31	55–8921–03	1	Chute Supt Ring
32	46–8092	2	Plastite Screw
33	3296–56	1	Nut–Lock Ni
34	3296–42	5	Nut–Lock Ni
35	3230–16	3	Screw–HH
36	71–4990–03	1	RH Chute Ring Retr
37	321–4	4	Screw–HH
38	80–4811	1	Upper Shroud
39	3250–32	2	Screw–PPH
40	3256–70	3	Washer–Flat
41	32149–1	3	Nut–Keps

3322–793

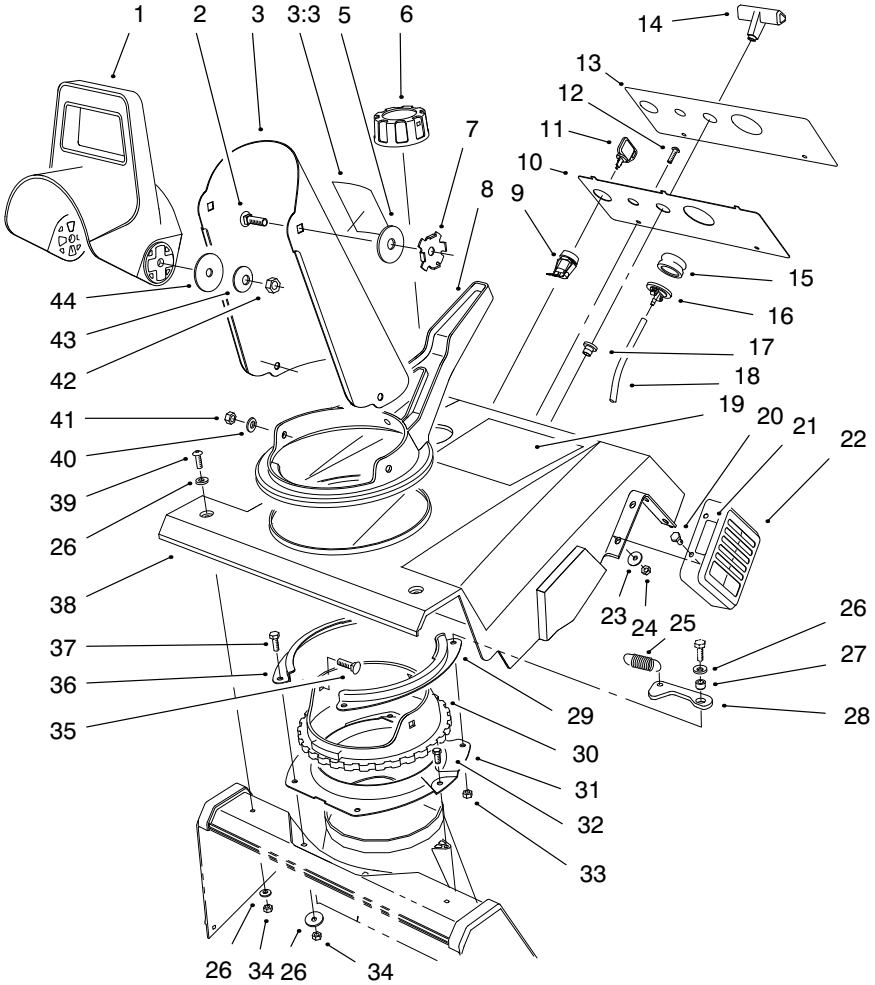

Sheet No.:2

Deflector & Control Panel Assembly (cont.)

Ref. No.	Part No.	Qty.	Description
42	3296–29	2	Nut–Lock Ni
43	3290–456	2	Washer–Belleville
44	3256–68	2	Washer–Flat

Ref. No.	Part No.	Qty.	Description

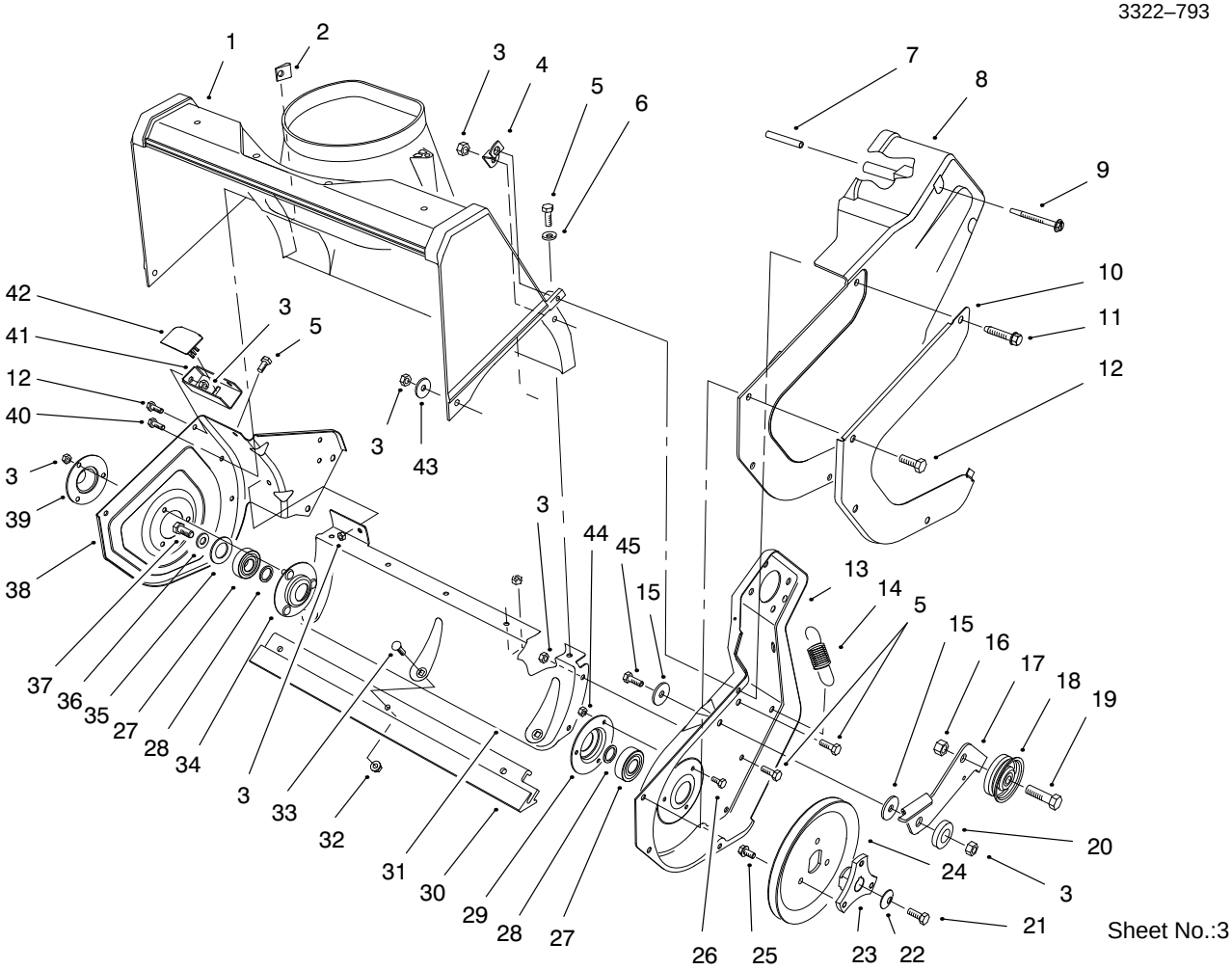

Sheet No.:3

Housing & Side Plate Assembly

Ref. No.	Part No.	Qty.	Description
1	55–8700	1	Housing
2	32115–14	1	Speed Nut
3	3296–42	21	Nut–Lock Ni
4	55–9430	1	Hsg Brkt
5	321–4	10	Screw–HH
6	3256–22	5	Washer–Flat
7	57–3830	2	Tubular Spacer
8	71–5030	1	Drive Cover
9	71–5350	2	Thread Forming Screw
10	71–5150–03	1	Edge Guard
11	36–3860	1	Spec Screw
12	32105–15	7	Screw–Machine
13	71–4911–03	1	Left Sideplate
14	71–5470	1	Brake Spring
15	3256–55	2	Washer–Flat
16	3296–39	1	Nut–Lock Ni
17	71–5160	1	Brake Arm Idler
18	71–5260	1	Idler Pulley
19	323–44	1	Screw–HH
20	80–4620	1	Spacer
21	321–30	1	Screw–HH
22	3290–456	1	Washer–Belleville
23	71–5070	1	Hub – Mtg, Pulley
24	71–5410	1	Rotor Pulley
25	12–3270	3	Screw
26	32105–8	3	Screw

Ref. No.	Part No.	Qty.	Description
27	38–7820	2	Bearing–Ball
28	52–7280	2	Thrust Washer
29	38–8620	1	Bearing Flange
30	71–5390	1	Scraper
31	71–4930–03	1	Lower Housing
32	32128–10	3	Flange Locknut
33	3229–11	3	Screw–CARR
34	52–9110	1	Brg Flange Wa
35	52–7270	1	Rubber Washer
36	3256–24	1	Washer–Flat
37	3234–25	1	Flange Bolt
38	71–4920–03	1	RH Sideplate
39	52–7290–03	1	Brg Retainer
40	321–39	1	Screw–HH
41	71–5310–03	1	Sideplate Brkt Supt
42	71–5270	1	Bracket Cover
43	3256–67	2	Washer–Flat
44	3296–2	3	Nut–Lock Ni
45	321–6	1	Screw–HH

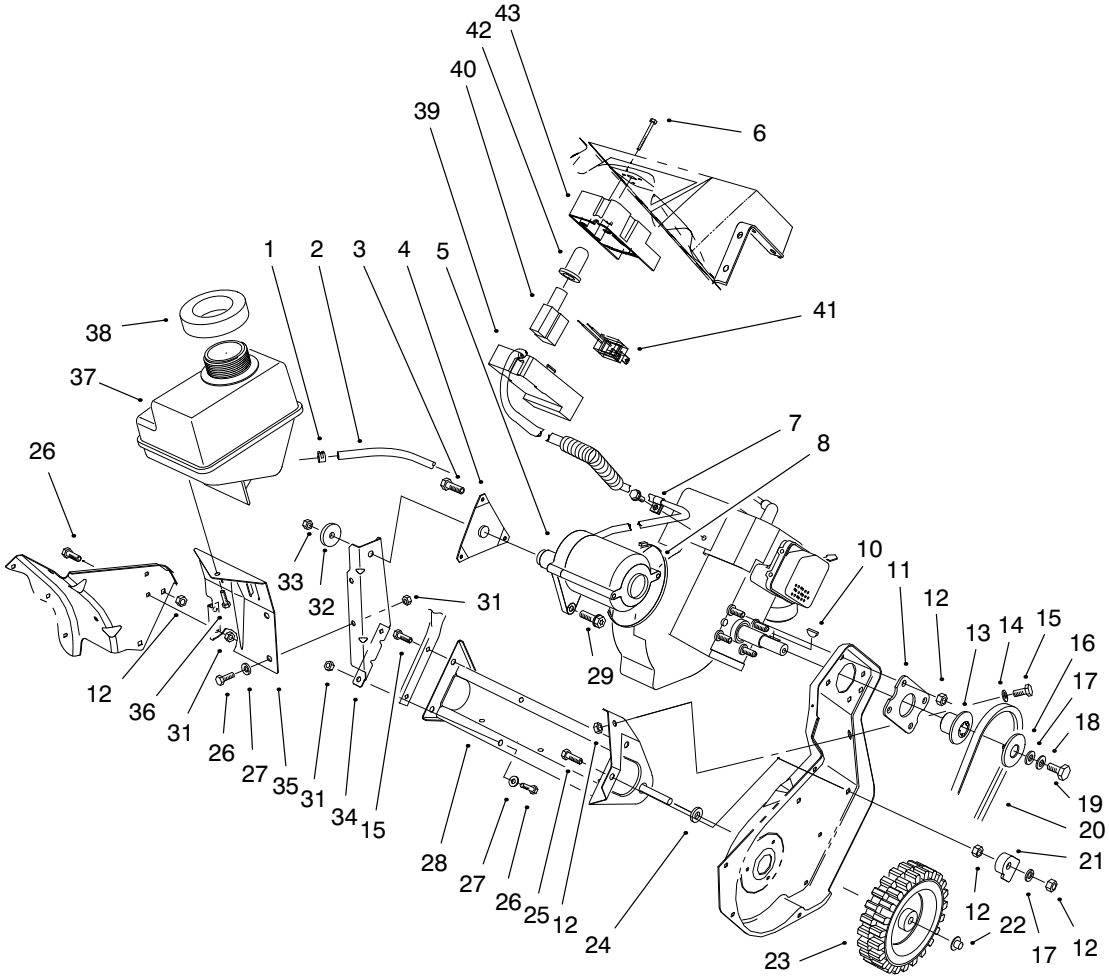

Engine & Gas Tank Assembly

Ref. No.	Part No.	Qty.	Description
1	2412–98	2	Clamp
2	49–2482	1	Gas Line
3	3255–10	1	Washer–Lock/Ext
3	92–6031	1	Screw
4	92–6012	1	Bracket/Stud ASM
5	77–0402	1	Motor & Switch Hsg ASM (only on: 38405)
6	32144–27	3	Screw–Plastite (only on: 38405)
7	2412–91	1	Clamp R (only on: 38405)
8	250–7	1	Tie–Cable
10	3257–3	1	Key–Woodruff
11	71–5290–03	1	Engine Plate
12	3296–29	8	Nut–Lock Ni
13	71–5050	1	Hub – Half Sheave
14	3256–23	1	Washer–Flat
15	322–3	3	Screw–HH
16	71–5060	1	Cap – Half Sheave
17	3256–71	2	Washer–Flat
18	3290–456	1	Washer–Belleville
19	3235–6	1	Screw–Hex Hd Cs
20	71–5381	1	Drive V–Belt
21	84–5610	1	Guide–Cable
22	3290–320	2	Retainer–Push On
23	23–3250	2	Wheel

Ref. No.	Part No.	Qty.	Description
24	71–5440	2	Wheel Spacer
25	322–5	1	Screw–HH
26	321–4	6	Screw–HH
27	3256–22	4	Washer–Flat
28	71–5200–03	1	Frame Wa
29	80–0700	2	Screw – Mtg Torx (only on: 38405)
31	3296–42	6	Nut–Lock Ni
32	71–5320	1	Engine Support Washer
33	3296–16	1	Nut–Lock Ni
34	71–5210–03	1	Engine Support
35	71–5220–03	1	Tank Bracket
36	32144–53	1	Screw–Self TAP
37	71–5020	1	Fuel Tank
38	55–9310	1	Foam Seal
39	100–3441	1	Base Housing Switch (only on: 38405)
40	61–4820	1	Switch,Starter (only on: 38405)
41	94–9933	1	Power Plug (only on: 38405)
42	61–4810	1	Boot,Switch (only on: 38405)
43	100–3442	1	Cap Housing Switch (only on: 38405)

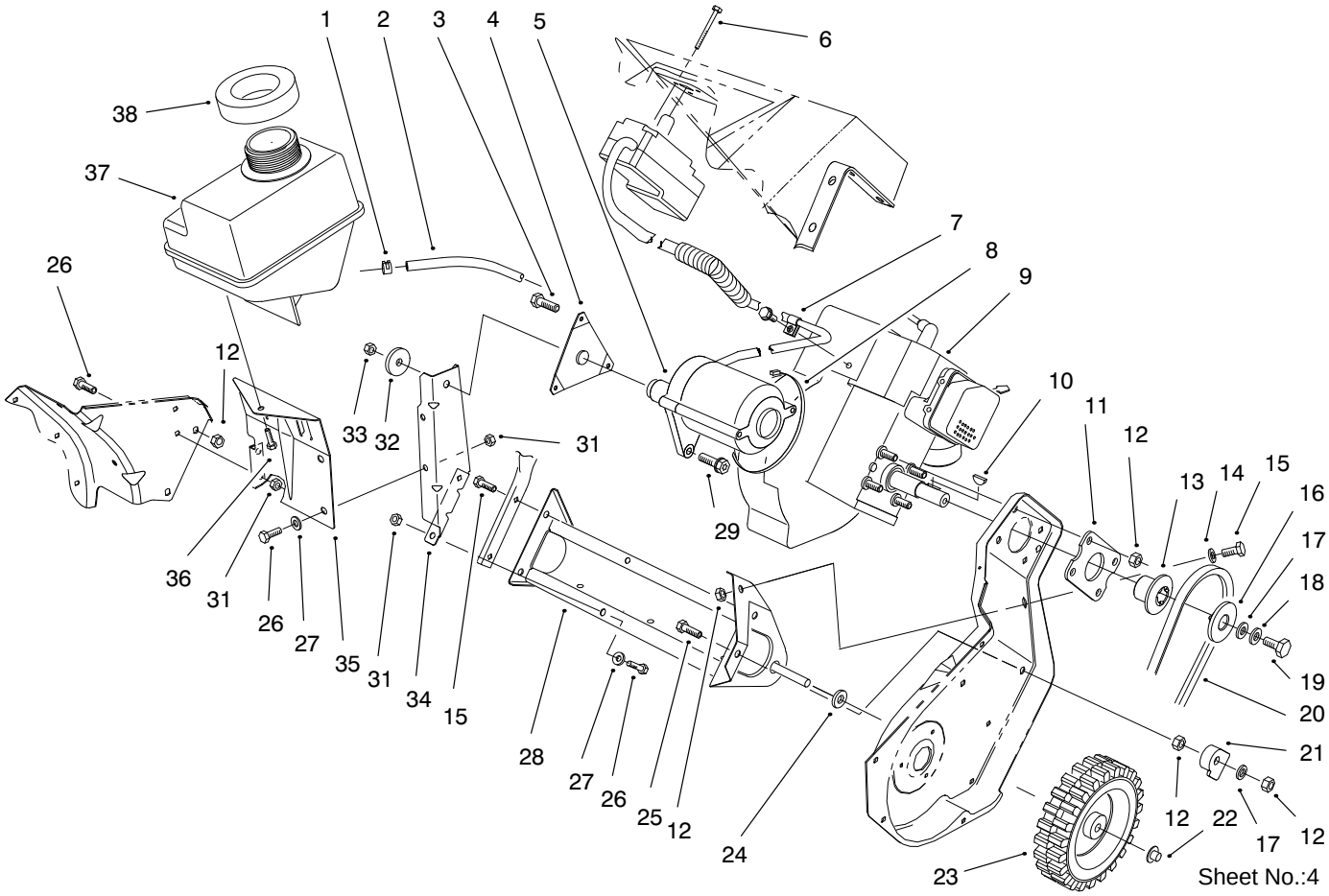

Engine & Gas Tank Assembly

Ref. No.	Part No.	Qty.	Description
*	28–9170	1	Cord (only on: 38405)

Ref. No.	Part No.	Qty.	Description

* Not illustrated

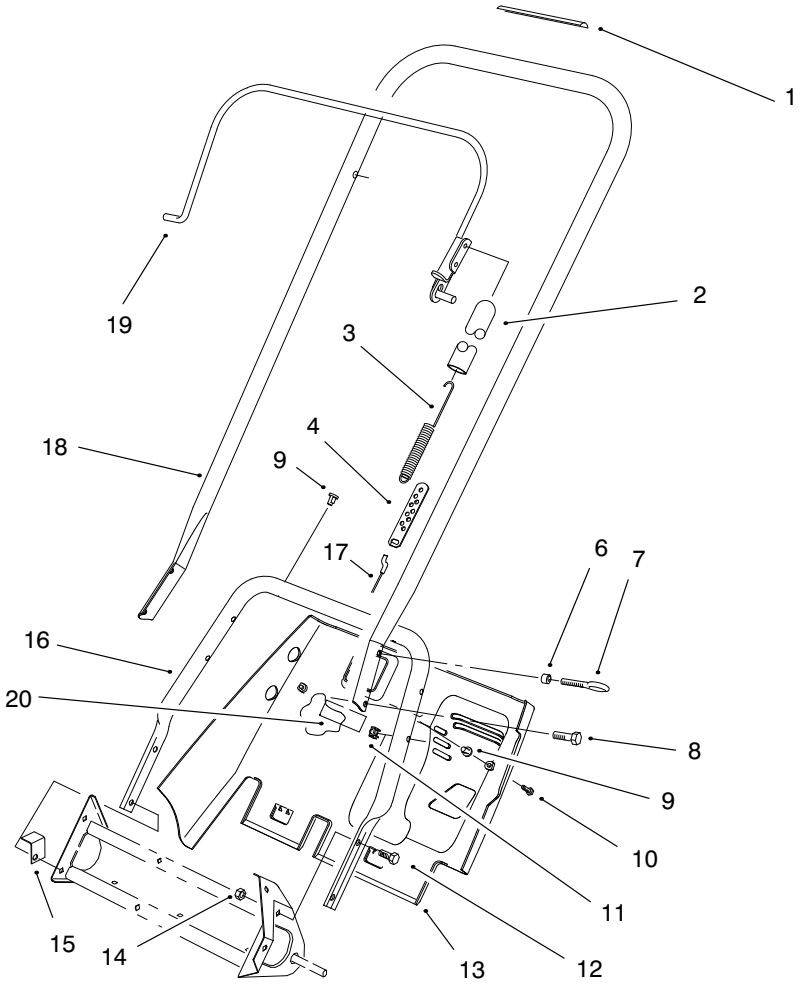

Sheet No.:5

Handle Assembly

Ref. No.	Part No.	Qty.	Description
1	66–6870	1	Decal – Rotor Drive
2	71–5530	1	Spring Cover
3	71–5480	1	Clutch Spring
4	71–5330	1	Clutch Cable Adjuster
6	55–9370	1	Rotor Bld Spacer
7	3299–1	1	Eyebolt
8	32105–11	3	Screw–Hex Hd Slot
9	3290–486	5	Expansion Type Fastener
10	32144–53	3	Screw–Self TAP
11	3290–225	4	Tinnerman Nut
12	322–3	2	Screw–HH
13	71–5040	1	Lower Shroud
14	3296–29	2	Nut–Lock Ni
15	71–5600	1	Shroud Bracket
16	71–5370–03	1	Lower Handle Tube
17	55–9322	1	Clutch Cable
18	100–3599	1	Handle–Upper
19	71–5120–03	1	Bail Wa
20	61–4790	1	Decal (only on: 38405)

Ref. No.	Part No.	Qty.	Description

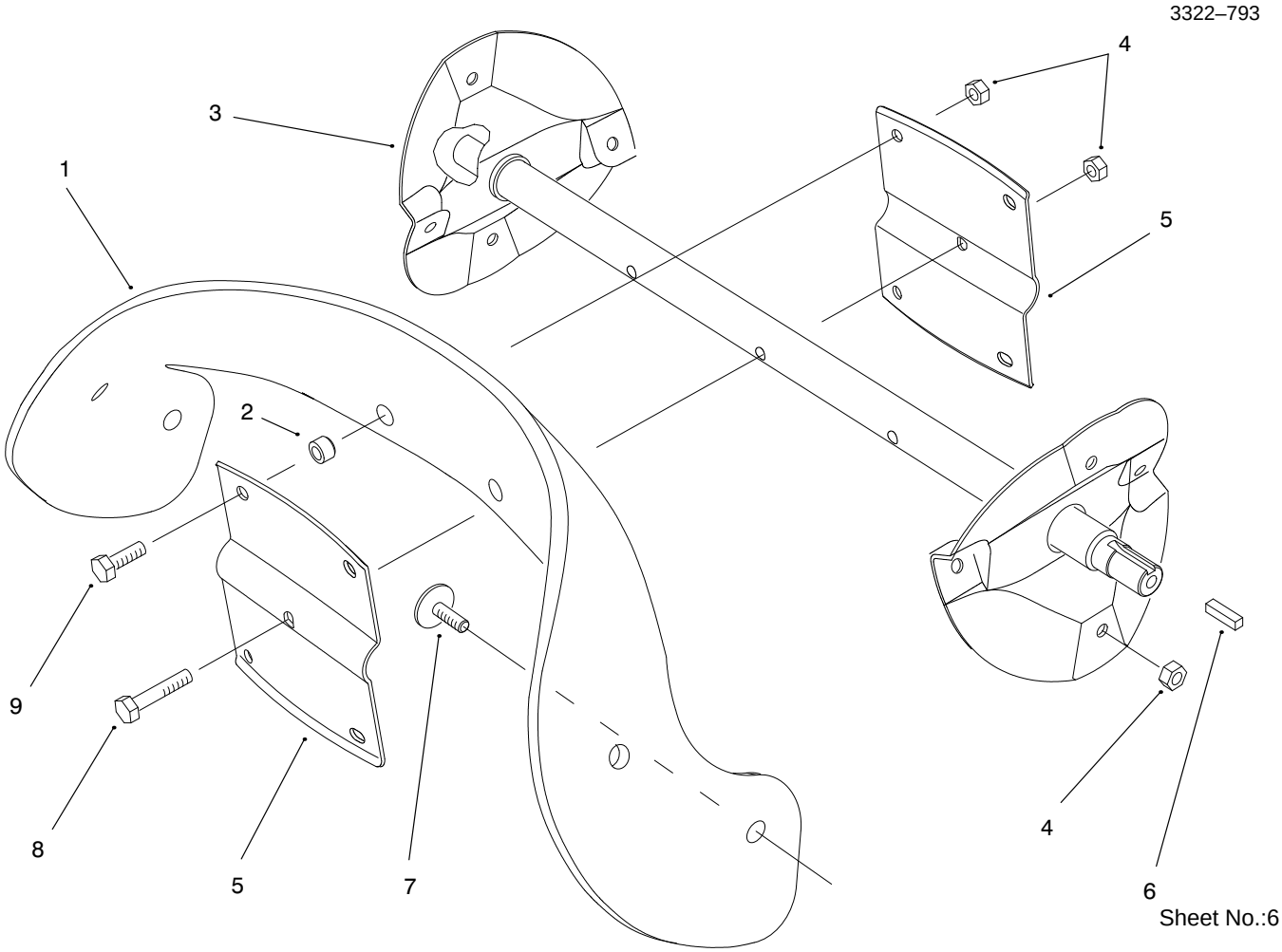

Rotor Assembly

Ref. No.	Part No.	Qty.	Description
1	88–0781	2	Rotor Blade (Ccr 1000)
2	55–9370	4	Rotor Bld Spacer
3	55–9202–03	1	Rotor Wa
4	3296–56	13	Nut–Lock Ni
5	66–6600–03	2	Rotor Half
6	10–8040	1	Key–Square
7	84–1971	8	Screw–Csunk Oval
8	321–8	1	Screw–HH
9	321–4	4	Screw–HH

Ref. No.	Part No.	Qty.	Description

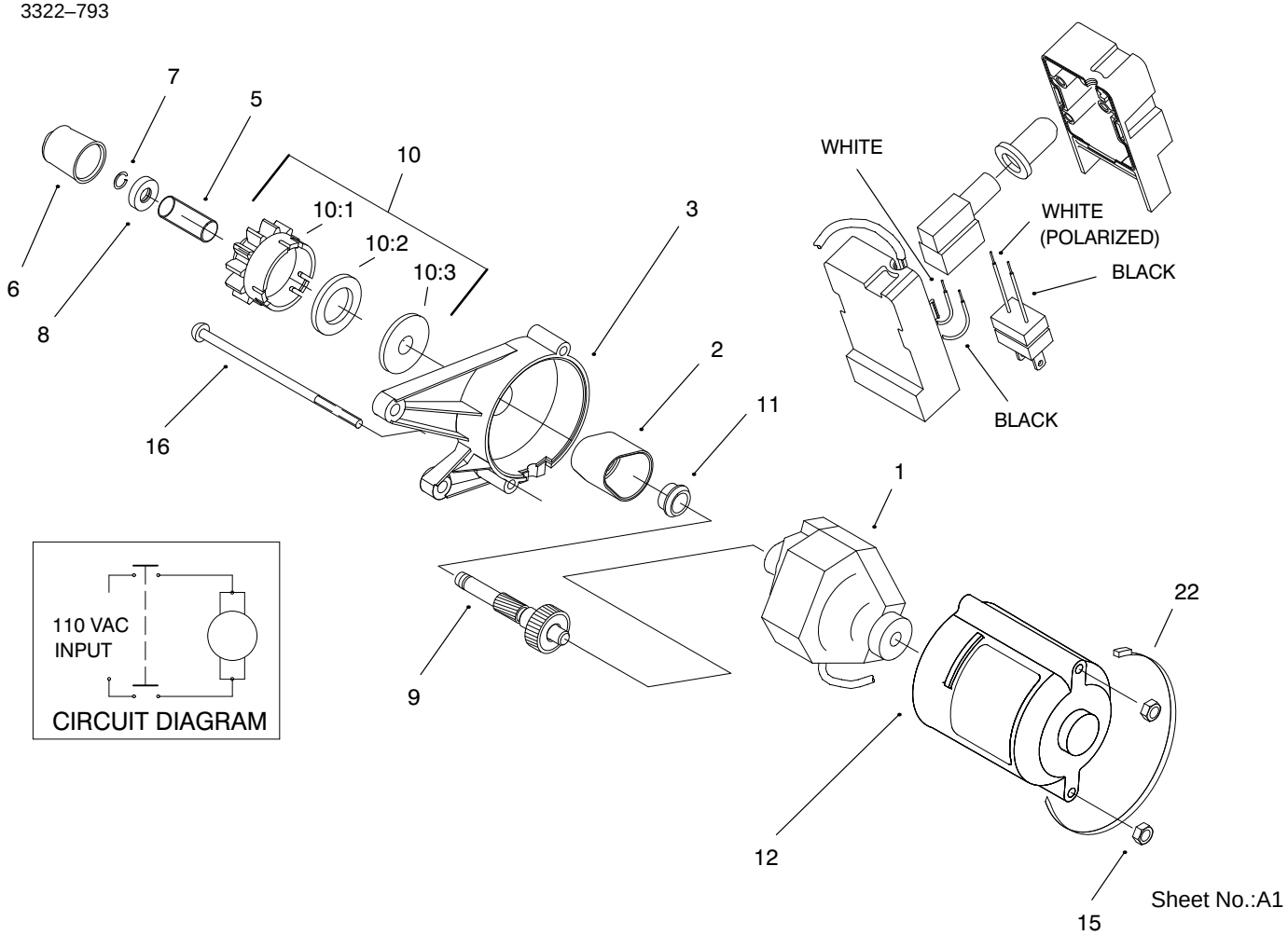

Motor & Switch Housing Assembly (Model No. 38405) (120 Volt)

Ref. No.	Part No.	Qty.	Description
1	70–7802	1	Starter Motor Assembly (only on: 38405)
2	70–7850	1	Gear Cover (only on: 38405)
3	100–3443	1	Housing Upper Starter (only on: 38405)
5	61–4690	1	Spring (only on: 38405)
6	70–7890	1	Cap Pinion (only on: 38405)
7	61–4680	1	Lock Ring (only on: 38405)
8	100–2902	1	Pinion Stop (only on: 38405)
9	92–6003	1	Shaft/Gear ASM–Service (only on: 38405)
10	84–5240	1	Pinion ASM (R & S) (only on: 38405)
10:1	70–7790	1	Nut (only on: 38405)
10:2	84–5230	1	Pinion (only on: 38405)

Ref. No.	Part No.	Qty.	Description
10:3	84–5440	1	Ring – Rubber (only on: 38405)
11	70–7900	1	Bushing (only on: 38405)
12	100–3444	1	Housing Lower Starter (only on: 38405)
15	3296–2	2	Nut–Lock Ni (only on: 38405)
16	32144–101	2	Screw–Mach (only on: 38405)
22	250–7	1	Tie–Cable

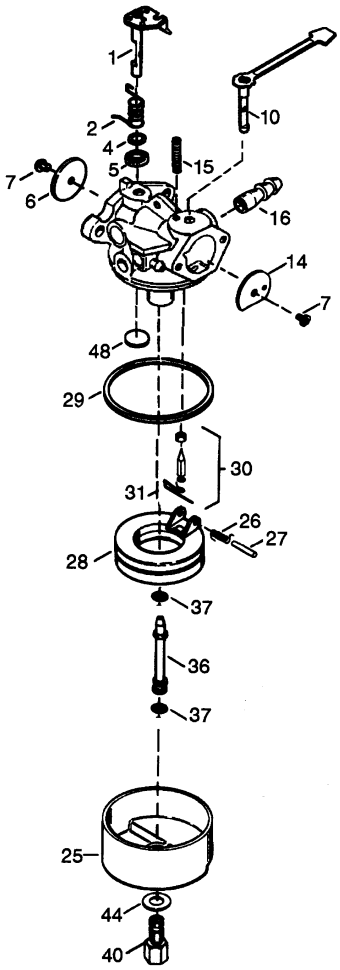

CARBURETOR NO. 640086

Ref. No.	Part No.	Description	No. Used
1	632166A	Throttle Shaft & Lever Asm.	1
2	632169	Throttle Return Spring	1
4	631184	Dust Seat Washer	1
5	631183	Dust Seat (Throttle)	1
6	631621	Throttle Shutter	1
7	650506	Shutter Screw	2
10	632553	Choke Shaft & Lever Asm.	
14	631815	Choke Shutter	1
15	630735	Choke Positioning Spring	1
16	632164	Fuel Fitting	1
25	631867	Float Bowl	1
26	632386	Float Dampening Spring	1

Ref. No.	Part No.	Description	No. Used
27	631024	Float shaft	1
28	632019	Float	1
29	631028	Float Bowl ”O” Ring	1
30	631021	Inlet Needle, Seat & Clip (Incl. Ref. #31)	1
31	631022	Spring Clip	1
36	640080	Main Nozzle Tube	1
37	632547	”O” Ring, Main Nozzle Tube	1
40	640087	High Speed Bowl Nut	1
44	27110	Bowl Nut Washer	1
48	631027	Welch Plug	1

ENGINE TECUMSEH MODEL NO. HSK635–1721A

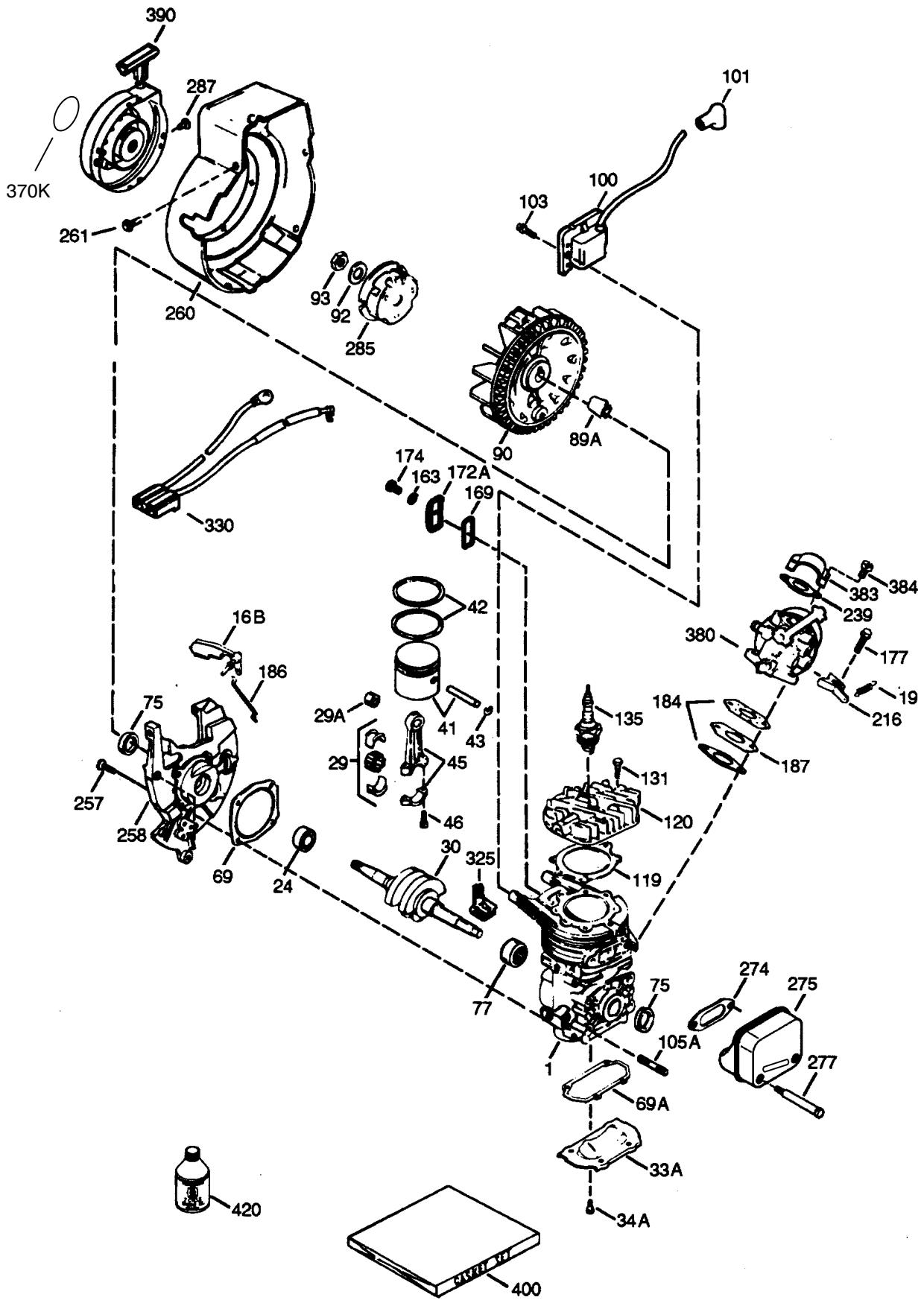

ENGINE TECUMSEH MODEL NO. HSK635–1721A

Ref. No.	Part No.	Description	No. Used
1		Cylinder (Order Short Block if Replacement is needed)	1
16B	490291A	Air Vane	1
19	570707	Extension Spring	1
24	530110	Ball Bearing	1
29	530150	Needle Bearing & Liner Set (37 Needles)	1
29A	530104A	Cartridge Bearing	1
30	290602	Crankshaft	1
33A	570644	Cover Plate	1
34A	650579	Screw, Torx T–25	4
41	310283A	Piston & Pin Assembly	1
42	310190	Ring Set	2
43	310167	Piston Pin Retaining Ring	2
45	310235B	Connecting Rod Assembly (Incl. Ref. #29, 29A, & 46)	1
46	650633	Connecting Rod Bolt	4
*69	510292A	Cylinder Cover Gasket	1
*69A	510323A	Cover Plate Gasket	1
75	510319	Oil Seal	2
77	530105	Cartridge Bearing	1
89A	611032	Adapter Sleeve	1
90	611066	Flywheel	1
92	650815	Belleville Washer	1
93	650390	Flywheel Nutt	1
100	34443B	Solid State Ignition (Incl. Ref. #101)	1
101	610118	Spark Plug Cover	1
103	651007	Screw, Torx T–15	2
105A	650796	Stud	4
*119	510274A	Cylinder Head Gasket	1
120	250240B	Cylinder Head	1
131	650477	Screw, Torx T–30	5
135	611049	Resistor Spark Plug	1
163	650838	Washer	1
*169	510325A	Cover Plate Gasket	1
172A	570708	Compression Release Cover	1
174	650579	Screw, Torx T–25	1
177	650959	Screw	2
*184	510326A	Carburetor Gasket	2
186	490322	Governor Link	1
187	570438A	Spacer	1
216	570645	R.P.M. Adjusting Lever	1
239	35815	Air Cleaner Gasket	1
257	650911	Screw, Torx T–30	4
258	350422	Blower Housing Base (Incl. Ref. #27)	1
260	350437	Blower Housing	1
261	650737	Screw	4
*274	513067A	Exhaust Gasket	1
275	390330	Muffler (Incl. Ref. #274 & 277)	1
277	650869	Screw	2
285	590551A	Starter Cup	1
287	650926	Screw	3
325	29443	Wire Clip	1
330	611153	Wire Harness	1
370K	36695	Starter Decal	1
380	640086	Carburetor (Incl. Ref. #184)	1
383	570434	Spit Cup	1
384	650431	Screw, Torx T–25	2
390	590743	Rewind Starter	
400	510324B	Gasket Set	1
420	730227A	2–Cycle Oil (8 oz.)	1

*Included in Gasket Set No. 510324B

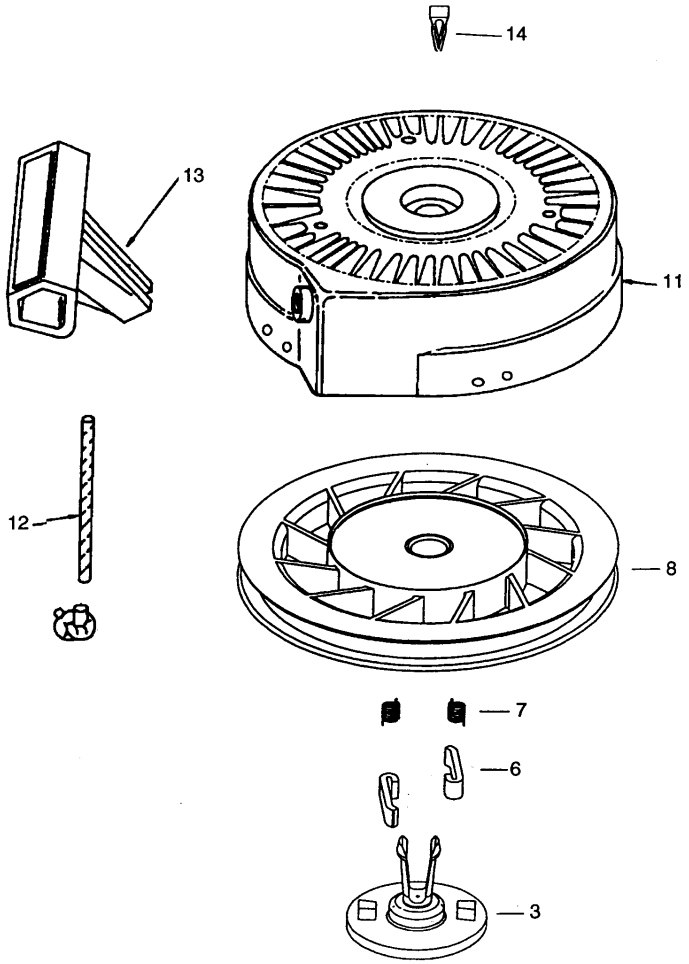

RECOIL STARTER NO. 590743

Ref. No.	Part No.	Description	No. Used
0	590743	Rewind Starter	1
3	590740	Retainer	1
6	590616	Starter Dog	2
7	590617	Dog Spring	2
8	590645A	Pulley & Rewind Spring Ass'y	1

Ref. No.	Part No.	Description	No. Used
11	590643	Starter Housing Ass'y	1
12	590535	Starter Rope (Length 98" x 9/64" Dia.)	1
13	590701	Starter Handle	1
14	590741	Locking Tab	1

Maintenance Record

Date								

TORO®