Form No. 3322–809

TORO®

CCR™ Powerlite® Int'l

Snowthrower

Model No. 38173–200000001 and Up
Model No. 38183–200000001 and Up

Parts Catalog

Ordering Replacement Parts

To order replacement parts, please supply: the part number, the quantity, and the description of each part desired.

Understanding Reference Numbers

Each identified part in an illustration has a reference number. The reference number for a part also appears in the parts list, along with other information about the part.

This catalog uses two special reference number formats, one to indicate parts in a service assembly and another to indicate the quantity of a given part in an illustration.

Service Assembly Reference Numbers

Parts in service assemblies have reference numbers in the form **a:b.** The **a** represents the reference number of the entire service assembly and the **b** represents a sequential number unique to each part within the service assembly.

For example, a wheel assembly might be identified by reference number **6**, the tire by **6:1**, the valve by **6:2**, and the wheel by **6:3**. When you order the assembly identified by reference number 6, you receive all parts identified by reference numbers 6:1, 6:2, and 6:3. However, you may also order any part individually.

Reference numbers of this type appear in illustrations and in part lists.

Reference Numbers Indicating Quantity

In an illustration, if a reference number indicates more than one part, the reference number has the form **nX y.** The **n** represents the quantity of the part, the **X** is the multiplication symbol, and the **y** represents the reference number.

For example, in an illustration, the reference number **2X 37** means that two of the parts identified by reference number 37 are indicated.

© The TORO Company — 1999
All Rights Reserved

Contents

Description	Page
Impeller Drive Assembly	3
Housing, Upper Shroud, & Chute Assembly	4
Impeller Assembly	5
Engine, Side Plate & Wheel Assembly	6
Starter Assembly (230 Volt) (Model No. 38183 only)	7
Handle & Lower Shroud Assembly	8
Engine Tecumseh Model No. HSK Type 1723A	9–10
Carburetor No. 640086	11
Recoil Starter No. 590743	12
Maintenance	13–15

Accessories

Description	Model / Part No.	Description	Model / Part No.

Part Description Abbreviations

Part descriptions in this catalog may include the following abbreviations.

Abbreviation	Meaning	Abbreviation	Meaning
AR	as required	INC	incorporated
ASM	assembly	LH	left hand
CARR	carriage	NI	nylon insert
DEG	degrees	PPH	Phillips pan head
FH	flat head	PTH	Phillips truss head
GA	gauge	PTO	power take off
HF	hex flange	RH	right hand
HH	hex head	SFH	slotted fillister head
HHF	hex head flange	SHH	slotted hex head
HLH	hex lag head	SQH	square head
HJ	hex jam	SHWH	slotted hex washer head
HOC	height-of-cut	SPH	slotted pan head
HS	hex socket	SRH	slotted round head
HSBH	hex socket button head	STD	standard
HSFH	hex socket flat head	TAP	self tapping
HSH	hex socket head	TTH	Torx truss head
HWH	hex washer head	WH	wing head
HWHTF	hex washer head thread forming		

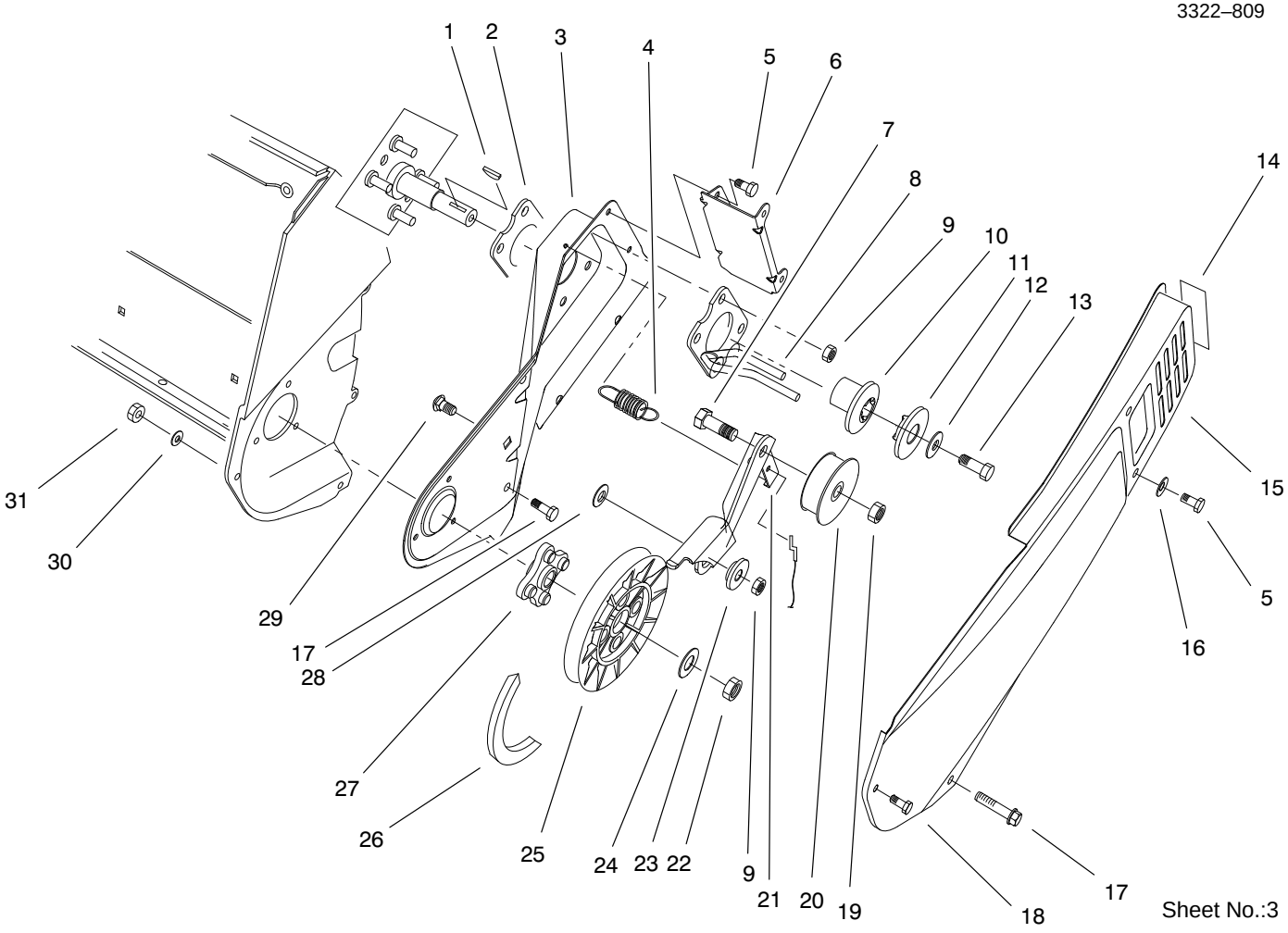

Impeller Drive Assembly

Ref. No.	Part No.	Qty.	Description
1	3257–3	1	Key–Woodruff
2	71–5290–03	1	Plate–Engine
3	95–7945–03	1	Sideplate–LH
4	71–5470	1	Brake Spring
5	32144–4	4	Screw–HH
6	75–8870–03	1	Brkt–Belt Cover
7	323–44	1	Screw–HH
8	94–9946–03	1	Belt Guide Wa
9	3296–29	5	Nut–Lock Ni
10	71–5050	1	Hub – Half Sheave
11	71–5060	1	Cap – Half Sheave
12	3256–71	1	Washer–Flat
13	3235–6	1	Screw–Hex Hd
14	94–2561	1	Decal – Hot
15	95–7946–03	1	Cover–Belt
16	3256–1	2	Washer–Flat
17	46–8094	3	Screw–Plastite
18	32105–23	1	Screw
19	3296–59	1	Nut–Lock Ni
20	71–5260	1	Pulley–Idler
21	94–9947	1	Arm–Brake
22	3296–38	1	Nut–Lock Ni
23	94–9948	1	Bushing–Idler
24	3256–25	1	Washer–Flat
25	75–8750	1	Pulley–Driven
26	99–1790	1	V Belt (Powerlite)

Ref. No.	Part No.	Qty.	Description
27	75–8740	1	Hub
28	25–5640	1	Washer
29	3230–23	1	Screw–CARR
30	3256–14	1	Washer–Flat
31	3296–2	1	Nut–Lock Ni

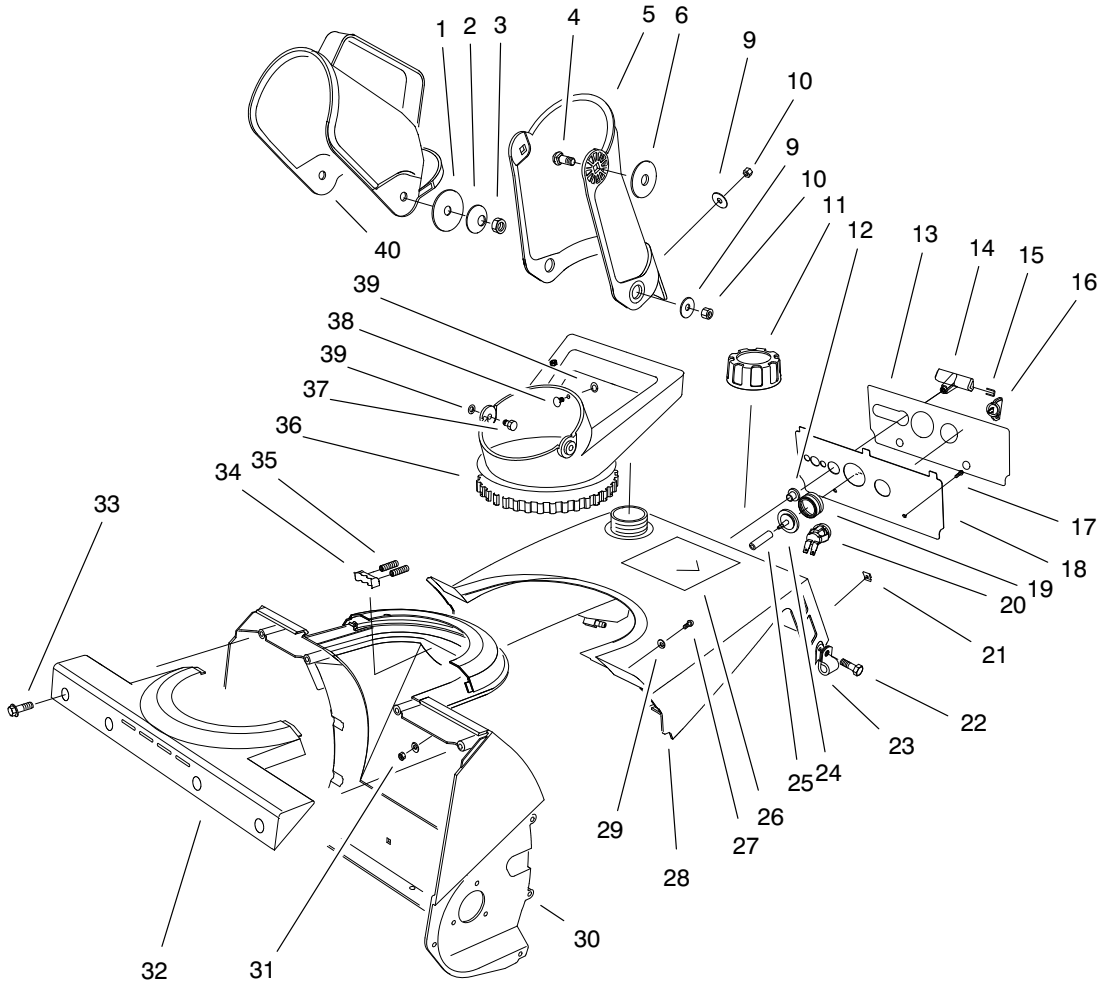

Sheet No.:4

Housing, Upper Shroud, & Chute Assembly

Ref. No.	Part No.	Qty.	Description
1	3256–68	2	Washer–Flat
2	3290–340	2	Washer–Belleville
3	3296–29	2	Nut–Lock Ni
4	3230–2	2	Screw–CARR
5	75–8762	1	Chute
6	95–1905	2	Washer–Rubber
9	3256–81	3	Washer–Flat
10	3296–56	3	Nut–Lock Ni
11	55–3573	1	ASM–Gas Cap
12	23–7470	1	Guide–Starter Rope
13	94–2564	1	Decal – Control Panel (only on: 38183)
13	94–2565	1	Decal – Control Panel (only on: 38173)
14	92–4853	1	Handle–Starter
15	92–5424	1	Staple–Handle
16	63–8360	1	Key–Ignition w/Shield
17	32144–53	2	Screw–Self TAP
18	75–9031–03	1	Panel–Control (only on: 38173)
18	75–9030–03	1	Panel–Control (only on: 38183)
19	66–7460	1	Bulb–Primer
20	40–5940	1	Switch–On/Off
21	49–1490	2	Nut
22	32144–89	2	Screw–Thrd Form

Ref. No.	Part No.	Qty.	Description
23	98–2256	1	Clamp
24	44–2750	1	Body–Primer
25	44–3173	1	Hose–Primer
26	99–9331	1	Decal – Powerlite Rec.3.25 HP (only on: 38173)
26	99–9332	1	Decal – Powerlite Rec. Ele 3.25 HP (only on: 38183)
27	3250–32	2	Screw–PPH
28	75–8800	1	Shroud–Tank Assembly
29	3256–1	4	Washer–Flat
30	75–8660	1	Housing
31	3296–42	2	Nut–Lock Ni
32	75–8650	1	Retainer–Chute
33	46–8094	4	Screw–Plastite
34	75–9160	1	Detent–Chute
35	75–9170	2	Spring–Compression
36	75–8670	1	Handle–Chute
37	321–3	2	Screw–HH
38	3229–11	1	Screw–CARR
39	32115–15	3	Pushnut–Bolt Retainer
40	75–8770	1	Deflector–Chute

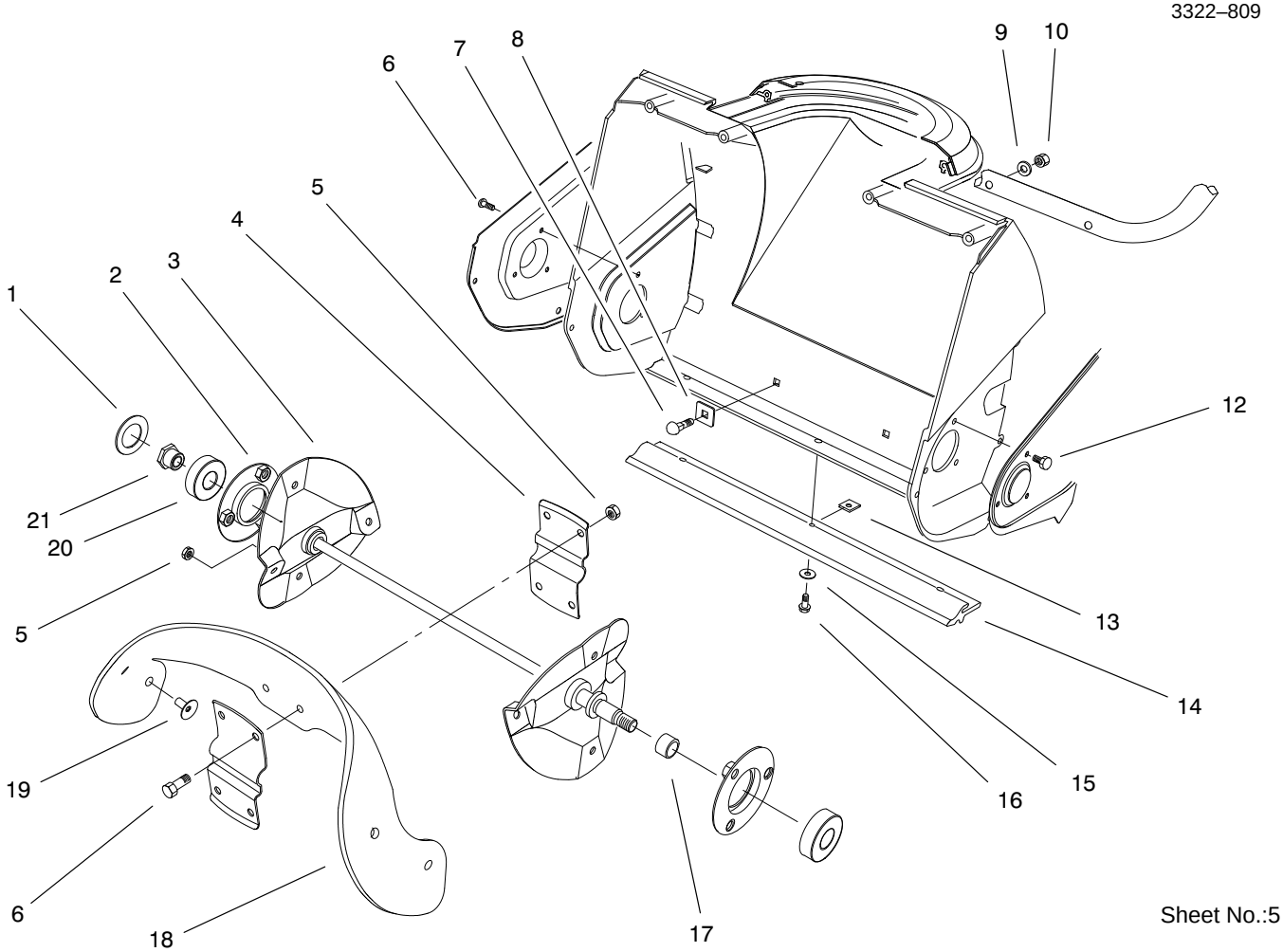

Sheet No.:5

Impeller Assembly

Ref. No.	Part No.	Qty.	Description
1	75–9180	1	Washer–Rubber
2	75–9080–03	2	Flange Bearing Wa
3	75–8840–03	1	Rotor Shaft Wa
4	75–8880–03	2	Support–Rotor
5	3296–56	12	Nut–Lock Ni
6	3234–33	7	Screw–HHF
7	3229–5	2	Screw–CARR
8	75–9040	2	Washer–Square
9	3–7501	2	Washer
10	3296–42	2	Nut–Lock Ni
12	321–3	3	Screw–HH
13	32115–19	3	Nut–”u” Type Speed
14	75–8780	1	Scraper
15	3256–14	3	Washer–Flat
16	32144–34	3	Screw–Thread Forming
17	75–8710	1	Spacer
18	84–1980	2	Blade–Rotor (Powerlite)
19	84–1970	8	Screw–C’sunk Oval
20	38–7820	2	Bearing–Ball
21	75–8690	1	Nut

Ref. No.	Part No.	Qty.	Description

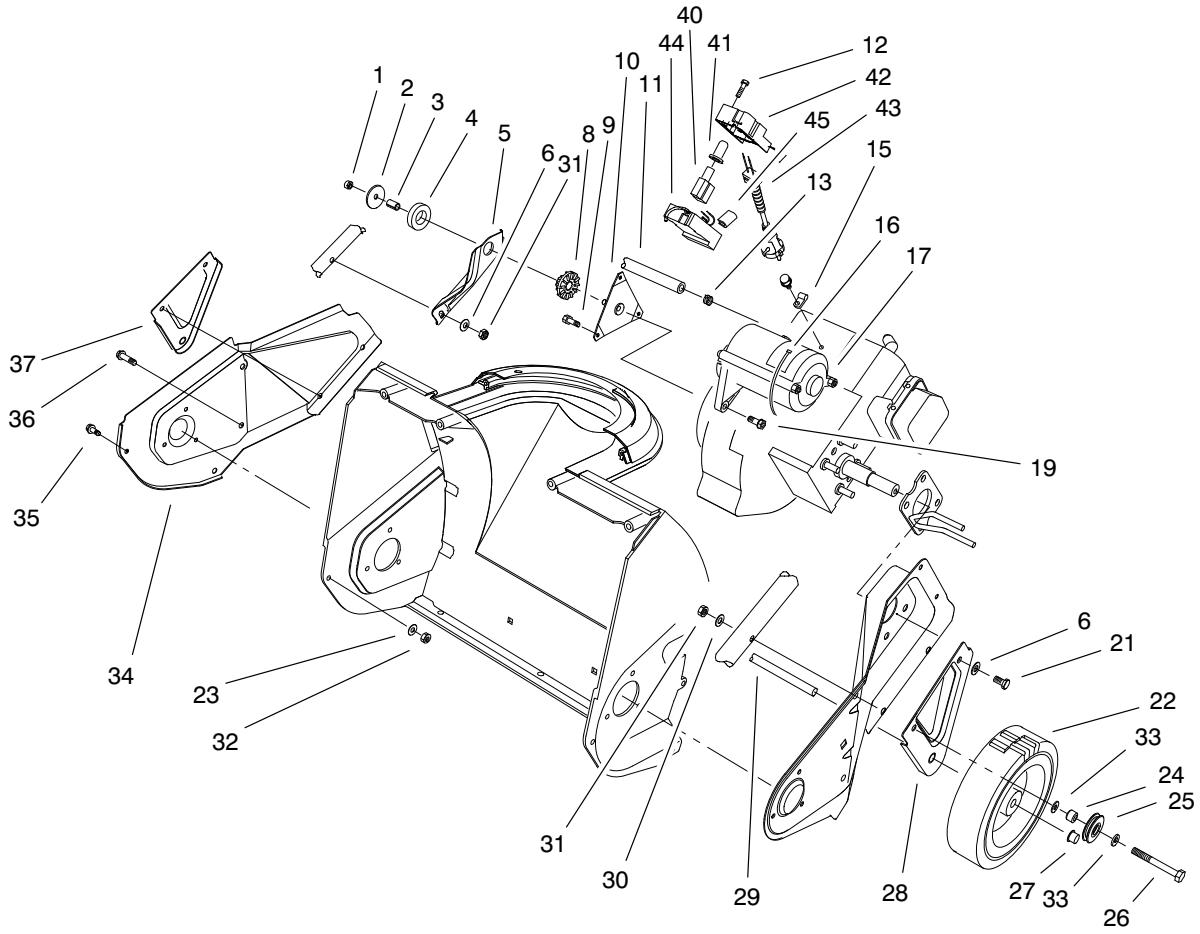

Sheet No.:6

Engine, Side Plate & Wheel Assembly

Ref. No.	Part No.	Qty.	Description
1	3296–16	1	Nut–Lock Ni
2	3256–58	1	Washer–Flat
3	80–0650	1	Spacer–Tubular
4	95–1903	1	Ring – Isolator
5	75–8980–03	1	Brkt–Engine Support
6	3256–1	5	Washer–Flat
8	75–9100	1	Bushing–Isolator
9	94–2789	3	Screw
10	92–6012	1	Bracket/Stud ASM
11	49–2483	1	Line–Gas
12	32144–27	3	Screw–Plastite (only on: 38183)
13	2412–98	2	Clamp
15	2412–91	1	Clamp R (only on: 38183)
16	250–7	1	Tie–Cable
17	98–2276	1	230 Volt Starter ASM P/L (Service) (only on: 38183)
19	80–0700	2	Screw – Mtg Torx (only on: 38183)
21	321–10	3	Screw–HH
22	23–3250	2	Wheel
23	3256–14	1	Washer–Flat
24	55–9370	1	Rotor Bld Spacer
25	95–7949	1	Cable–Pulley

Ref. No.	Part No.	Qty.	Description
26	321–11	1	Screw–HH
27	3290–320	2	Retainer–Push On
28	75–8910	1	Bracket–Wheel, LH *
29	27–0062	1	Axle
30	3–7501	2	Washer
31	3296–42	4	Nut–Lock Ni
32	3296–2	1	Nut–Lock Ni
33	3256–1	2	Washer–Flat
34	75–8820–03	1	Plate–RH Side
35	32105–23	1	Screw
36	46–8094	3	Screw–Plastite
37	75–8900–03	1	Bracket–Wheel, RH
40	36–8340	1	Switch–Starter (only on: 38183)
41	36–8350	1	Boot–Switch (only on: 38183)
42	100–3442	1	Switch–Cap Housing (only on: 38183)
43	100–3556	1	Plug–Power (only on: 38183)
44	100–3441	1	Switch–Base Housing (only on: 38183)
45	99–6088	1	Spacer–Plug (only on: 38183)
*	28–9170	1	Cord (only on: 38173)

* Not illustrated

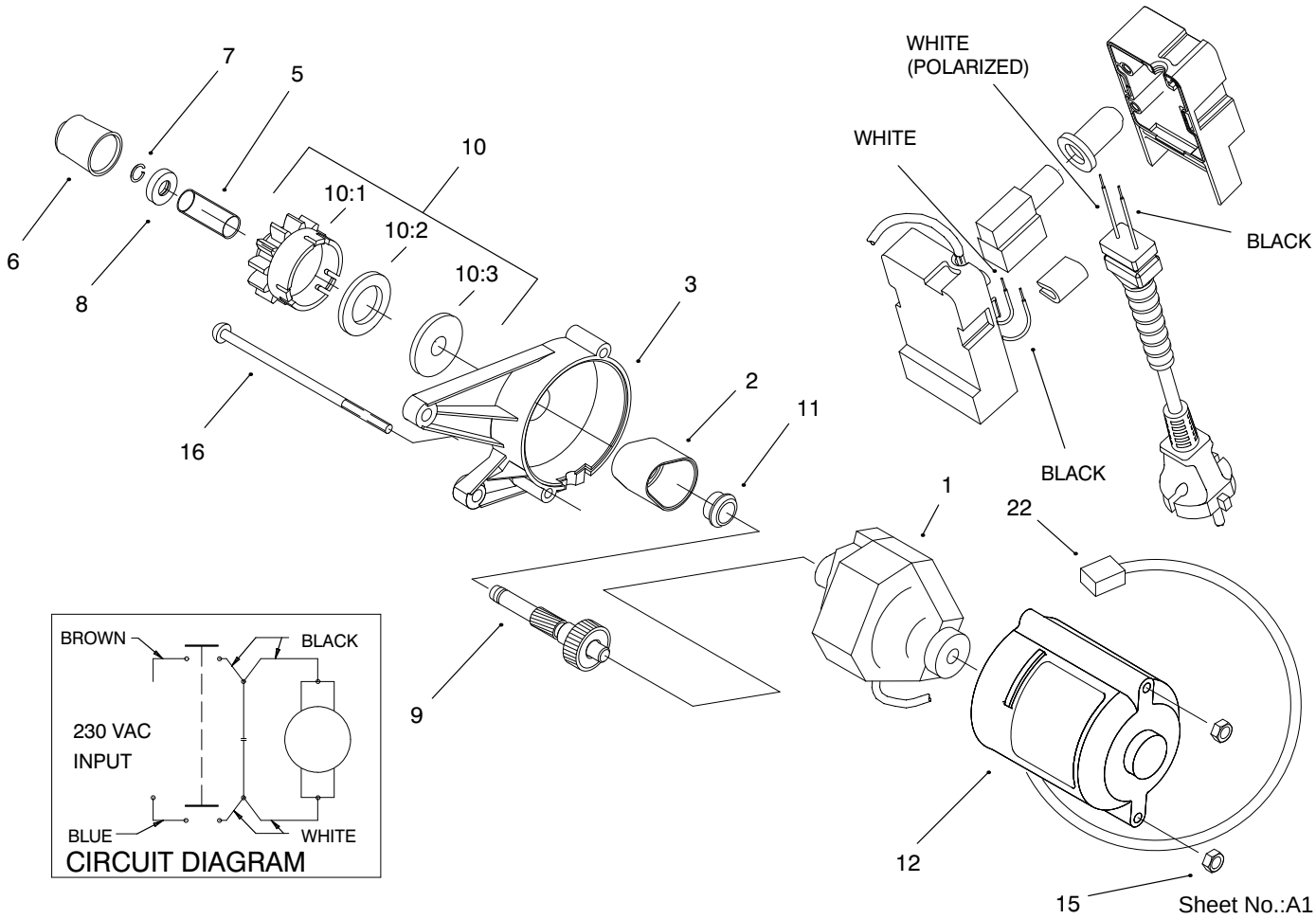

Starter Assembly (230 Volt) (Model No. 38183 only)

Ref. No.	Part No.	Qty.	Description
1	99–1917	1	Starter Motor ASM (only on: 38183)
2	70–7850	1	Cover–Gear (only on: 38183)
3	100–3443	1	Housing–Upper Starter (only on: 38183)
5	61–4690	1	Spring (only on: 38183)
6	70–7890	1	Pinion–Cap (only on: 38183)
7	61–4680	1	Ring–Lock (only on: 38183)
8	100–2902	1	Stop–Pinion (only on: 38183)
9	92–6003	1	Shaft/Gear ASM–Service (only on: 38183)
10	84–5240	1	Pinion ASM (R & S) (only on: 38183)
10:1	70–7790	1	Nut (only on: 38183)
10:2	84–5230	1	Pinion (only on: 38183)
10:3	84–5440	1	Ring – Rubber (only on: 38183)

Ref. No.	Part No.	Qty.	Description
11	70–7900	1	Bushing (only on: 38183)
12	100–3444	1	Housing–Lower Starter (only on: 38183)
15	3296–2	2	Nut–Lock Ni (only on: 38183)
16	32144–101	2	Screw–Mach (only on: 38183)
22	250–7	1	Tie–Cable (only on: 38183)

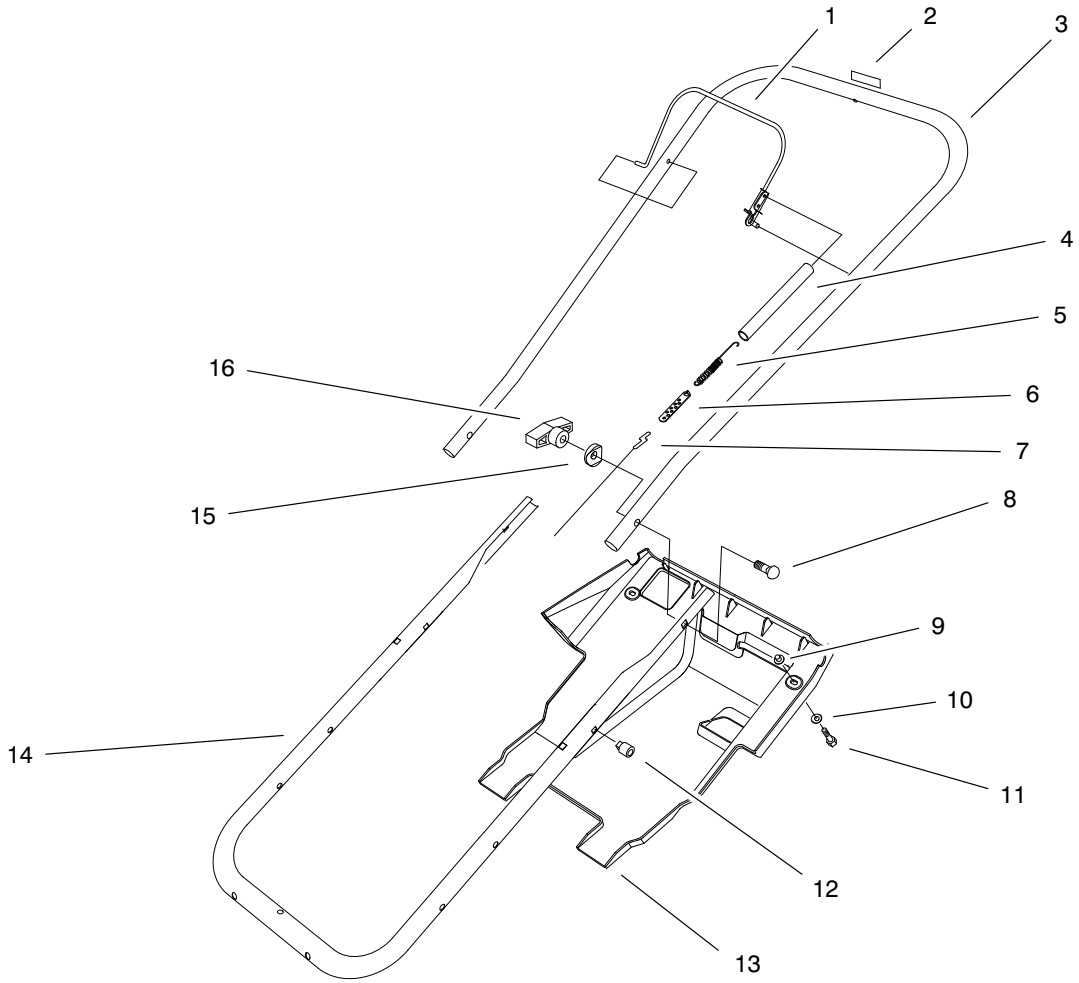

Sheet No.:7

Handle & Lower Shroud Assembly

Ref. No.	Part No.	Qty.	Description
1	95–7943–03	1	Bail Wa
2	94–2577	1	Decal – Rotor Drive
3	100–5453	1	Handle–Upper
4	71–5530	1	Spring Cover
5	71–5480	1	Clutch Spring
6	71–5330	1	Clutch Cable Adjuster
7	94–9949	1	Cable–Clutch
8	17–9426	2	Screw–Handle
9	605120	2	Grommet
10	3256–14	2	Washer–Flat
11	32144–34	2	Screw–Thread Forming
12	32115–17	2	Nut–Expansion
13	75–8790	1	Shroud
14	75–9060–03	1	Tube–Frame
15	75–9130	2	Washer–Curved
16	98–7134	2	Knob–handle

Ref. No.	Part No.	Qty.	Description

Engine Tecumseh Model No. HSK635 Type 1723A

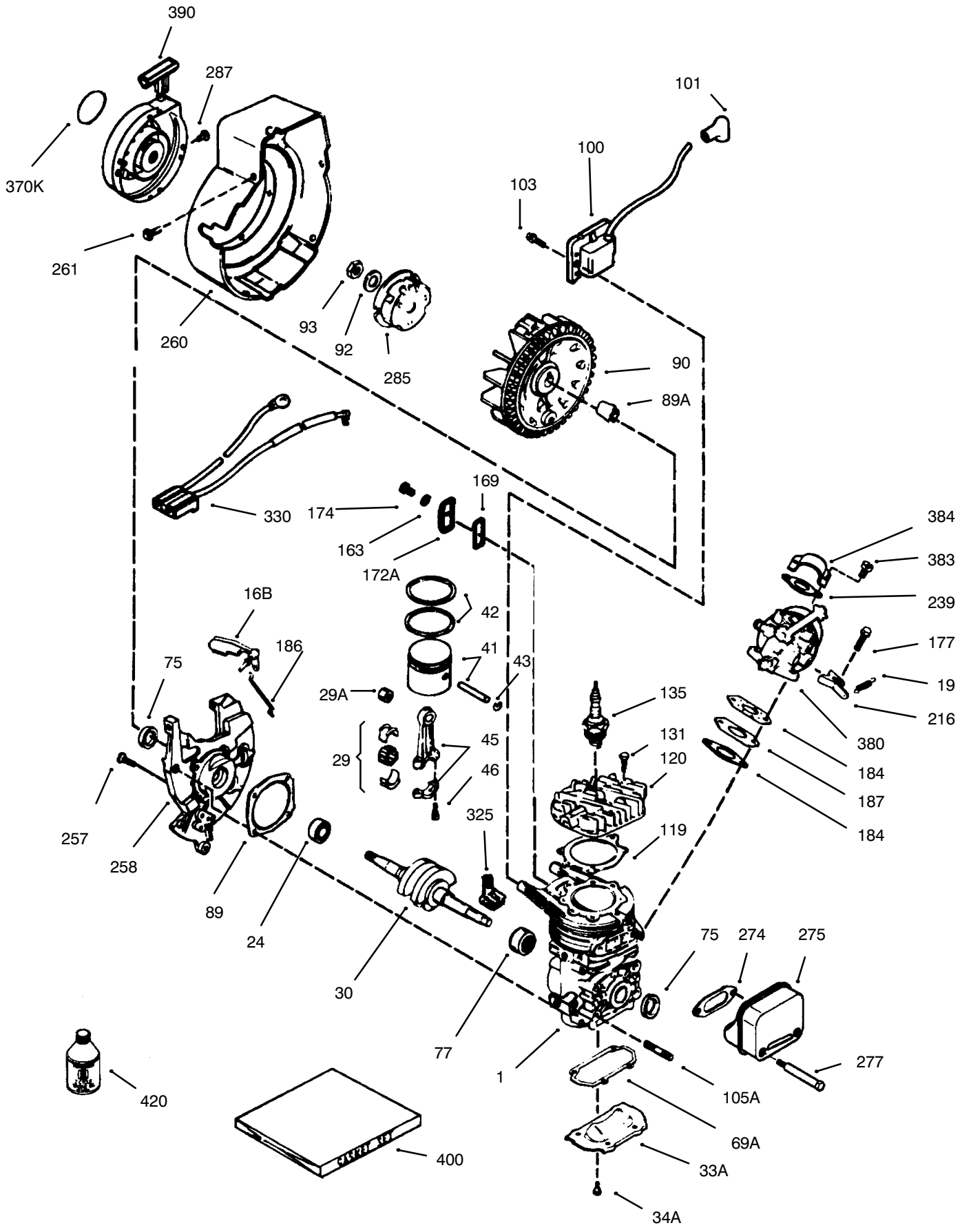

Engine Tecumseh Model No. HSK635 Type 1723A

Ref. No.	Part No.	Description	No. Used
1		Block Ass'y − Cylinder (Order short block if replacement is required)	1
16B	490291A	Vane Ass'y − Air	1
19	570707	Spring − Governor	1
24	530110	Bearing − Ball	1
29	530150	Bearing & Liner Set − Needle (37 Needles)	1
29A	530104A	Bearing − Cartridge	1
30	290602	Crankshaft	1
33A	570644	Plate − Cover	1
3A4	650579	Screw − Pan Flex Hd.	4
41	310283A	Piston & Pin Ass'y (Incl. ref. #43)	1
42	310289	Ring Set − Piston	1
43	310167	Ring − Piston Pin Retaining	2
45	310235B	Rod Ass'y − Connecting (Incl. ref. #29, 29A & 46)	1
46	650633	Screw − Connecting Rod	2
69*	510292A	Gasket − Cylinder Cover	1
69A*	510323A	Gasket − Cover Plate	1
75	510319	Seal − Oil	2
77	530105	Bearing − Needle	1
89A	611032	Sleeve − Flywheel	1
90	611066	Flywheel	1
92	650815	Washer − Belleville	1
93	650390	Nut − Flywheel	1
100	34443B	Solid State Ass'y (Incl. Ref. #101)	1
101	610118	Cover − Spark Plug	1
103	651007	Screw − Hex. Hd. Sems	2
105A	650796	Stud − Cylinder	4
119	*510274A	Gasket − Cylinder Head	1
120	250240B	Head − Cylinder	1
131	650477	Screw − Pan Flex Hd.	5
135	611049	Plug − Spark (RCJ−8Y or equivalent)	1
163	650838	Washer − Flat	1
169*	510325A	Gasket − Cover	1
172A	570708	Cover Ass'y − Compression Release	1
174	650579	Screw − Torx. Hd.	1
177	650959	Screw	2
184*	510326A	Gasket − Carburetor	2
186	490322	Link − Governor	1
187	570438A	Spacer	1
216	570645	Level − Adjusting	1
239	35815	Gasket − Filter Base	1
257	650911	Screw − Torx Pan Hd.	4
258	350422	Base Ass'y − Blower Housing (Incl ref. #27)	1
260	350437	Housing − Blower	1
261	650737	Screw − Hex. Washer Hd.	3
274*	510207A	Gasket − Exhaust	1
275	390332	Muffler (Incl. Ref. #274 & 277)	1
277	650869	Screw − Torx Pan Hd.	2
285	590551A	Cup − Starter	1
287	650926	Screw	3
325	29443	Clip − Spring	1
330	611131A	Harness − Wire	1
370K	36695	Decal − Starter	1
380	640086	Carburetor (Incl. ref. #184)	1
383	570434	Baffle − Air	1
384	650431	Screw − Pan Hd. Sems	2
390	590743	Starter Ass'y − Rewind	1
400	510324B	Gasket Set (Incl. Items Marked *)	1
422	730227B	Oil − 2 Cycle (8 oz.)	1

* Parts included in gasket set No. 400

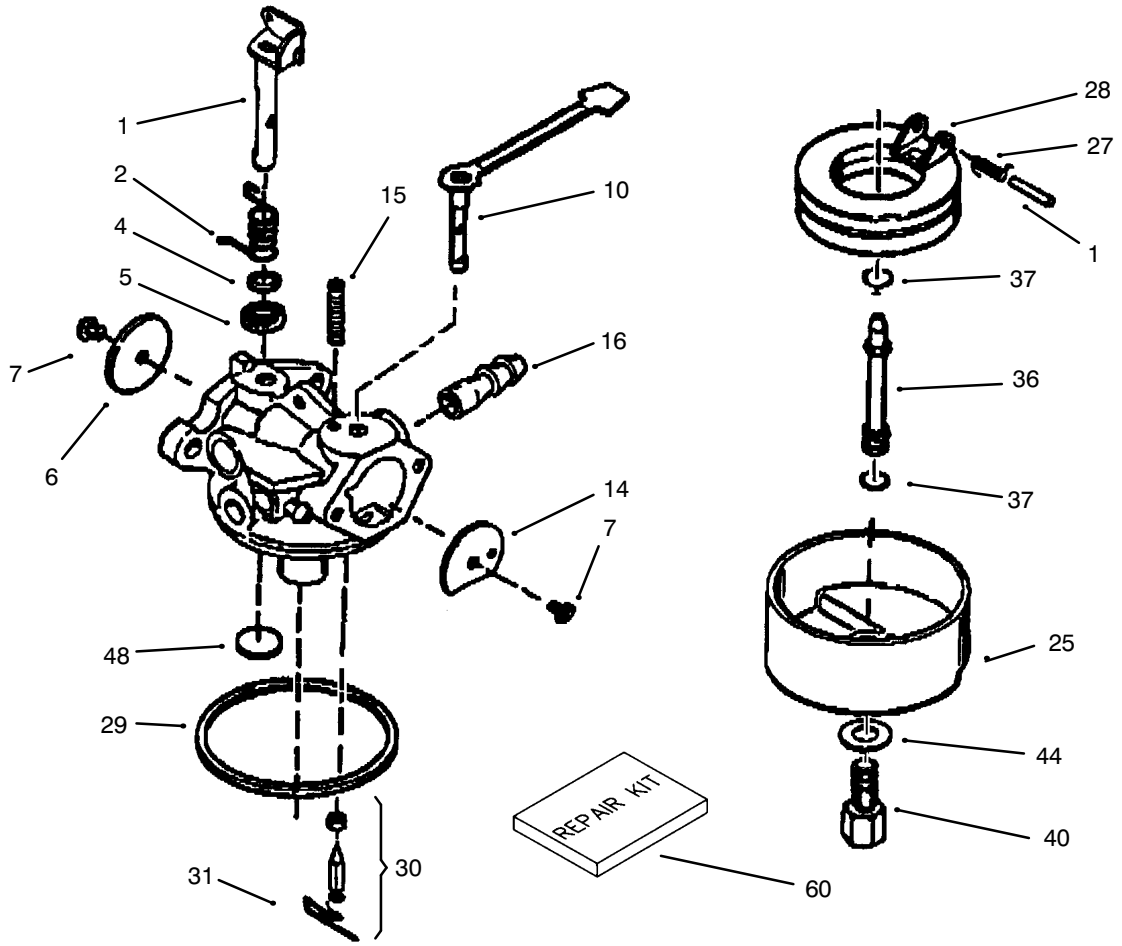

Carburetor No. 640086

Ref. No.	Part No.	Description	No. Used
1	632166A	Throttle Shaft & Lever Assy.	1
2	632169	Spring − Throttle Return	1
4	631184	Washer − Steel	1
5	631183	Washer − Felt	1
6	631621	Shutter − Throttle	1
7	650506	Screw − Shutter	2
10	632553	Choke Shaft & Lever Assy.	1
14	631815	Shutter − Choke	1
15	630735	Spring − Choke Positioning	1
16	632164	Fitting − Fuel Inlet	1
25	631867	Bowl − Float	1
26	632386	Spring − Float Shaft	1

Ref. No.	Part No.	Description	No. Used
27	631024	Shaft − Float	1
28	632019	Float − Carburetor	1
29	631028	Seal − O−Ring	1
30	631021	Inlet Needle, Seat & Clip (Incl. ref. #31)	1
31	631022	Clip − Spring	1
36	640080	Nozzle − Main	1
37	632547	O−Ring	2
40	640087	Nut − Float Bowl	1
44	27110A	Washer − Bowl	1
48	631027	Plug − Welch	1
60	632760	Repair Kit	1

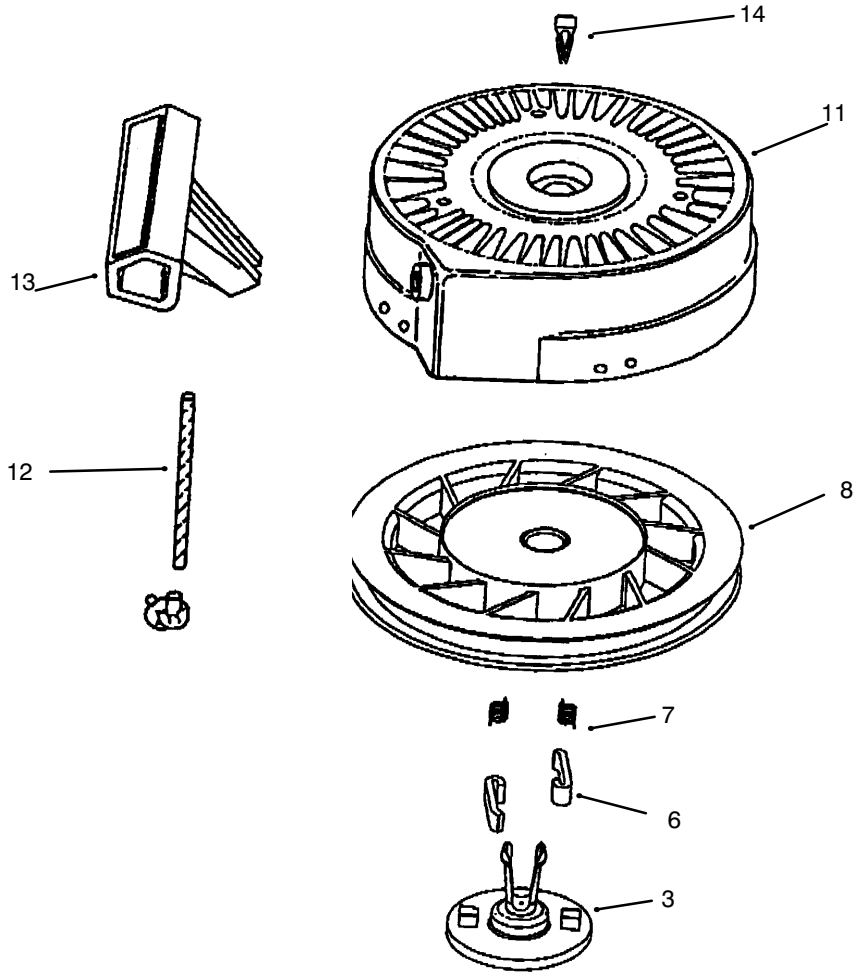

Recoil Starter No. 590743

Ref. No.	Part No.	Description	No. Used
3	590740	Retainer	1
6	590616	Dog − Starter	2
7	590617	Spring − Dog	2
8	590645A	Pulley & Rewind Spring Asm	1

Ref. No.	Part No.	Description	No. Used
11	590643	Starter Housing Assembly	1
12	590535	Rope − Starter	1
13	590701	Handle − Starter	1
14	590760	Spring Clip	1

Maintenance Record

Date								

Maintenance Record

Date								

Maintenance Record

Date								


TORO®