TORO®

REFERENCE DRAWING AND PARTS



19" WHIRLWIND - H.P.

MODEL NO. 18220—700001 & UP

(SPIN START)

21" WHIRLWIND - H.P.

MODEL NO. 19220—700001 & UP

21" WHIRLWIND - POW-R-DRIVE

MODEL NO. 20221—700001 & UP

Price 25 cents

SPECIFICATIONS

ENGINE: 19" (Impulse) LAV-30-30265F; 21" H.P. - Toro LAV-30-30265F; 21" Pow-R-Drive - Toro LAV-35-40152F.

ENGINE SHROUD: Rigid Polyethylene.

FUEL TANK CAPACITY: 1 quart.

CUTTER BLADE: 19" - 19" long; 21" H.P. and 21" S.P. - 21" long, "S" shaped hardened.

TRACTION CLUTCH (21" S.P.): Hand operated lever and control wire system mounted to escutcheon plate on upper handle which operates spiral jaw clutch in gear case on drive shaft.

FRONT WHEEL TRACTION DRIVE (21"S.P.): Special 3L V-belt, with an approximate 10 degree misalignment, running between two pulleys. The steel engine shaft pulley, integral with the blade hub, has a 2.0 eff. O.D.; the powdered iron worm shaft pulley, held with a D-shaped hole, has a 2.5 eff. O.D. The engine to gear box reduction is 1.27:1.

GEAR CASE (21" S.P.): Die cast aluminum case. Hardened and polished 4 thread steel worm supported by ball bearing and bronze bushings (6.25:1 reduction). Lubrication requirement: 2 oz. SAE 90 with extreme pressure characteristic.

WHEEL REDUCTION (21" S.P.): 14T Stressproof steel pinions on drive shaft supported by double sealed ball bearings to 42T laminated steel external spur gears riveted to wheel (3:1 reduction).

REDUCTION, ENGINE TO WHEELS (21"S.P.): 23.8:1

WHEELS: #18 ga. Steel disc with oil impregnated powered metal bushings.

TIRES (19" and 21" H.P.):
Front - Semi-pneumatic 6-3/4 x 1.75 Toro tread
Rear - Semi-pneumatic 8 x 1.75 Toro tread

TIRES (21" S.P.): Semi-pneumatic 8 x 1.75 Toro tread.

HEIGHT OF CUT: 1/2" to 3" by moving wheels, with hand operated levers.

WIDTH OF CUT: 19" and 21"

HOUSING: Diecast magnesium alloy, spiral grass chamber, right hand discharge. Symmetrical wheel locations. Hinged chute deflector.

HANDLE: 3/4" O.D. x #16 ga. welded steel tubing in separable halves. No tool, positive handle height adjustment.

THROTTLE CONTROL: Control wire and casing. Operating lever mounted to escutcheon plate on upper handle. Stop, run, and choke positions. Spin Start engines are equipped with positive mechanical interlock between starter release and throttle control.

DIMENSIONS:

Width 19" - 22½"; 21" H.P. and 21" S.P. - 24½"

Length 19" - 29"; 21"H.P. - 30½"; 21"S.P. - 32½"
w/o handle, wheels at 1" cut

Height 19" and 21" H.P. - 13 1/4" (Spin Start)
21" Pow-R-Drive - 14 1/2" (Spin Start)

WEIGHT:
19" - 51 pounds
21" H.P. - 54 pounds
21" S.P. - 66 pounds

STANDARD EQUIPMENT:
Grass bag assembly, bagging chute, bag hanger, anti-scalp dish, washout port, "Trimit"† edge trimmer, "Auto-oiler"† visual oil filler.

† Exclusive mark of Toro Manufacturing Corporation.

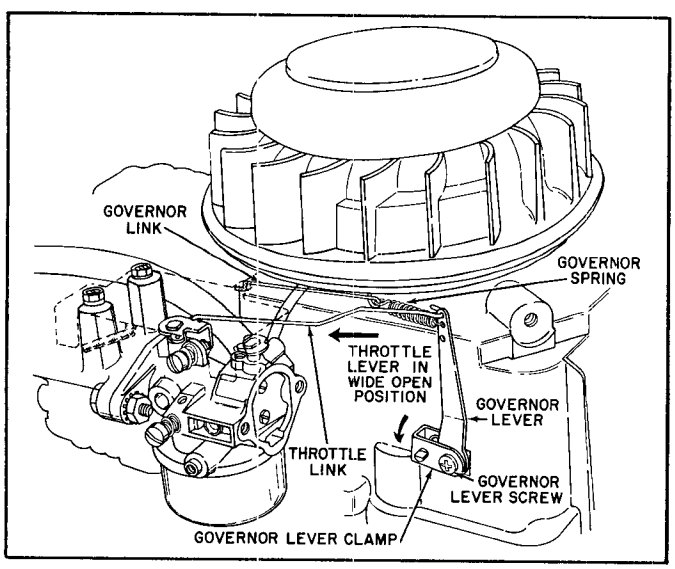

MECHANICAL GOVERNOR ADJUSTMENTS

1. Loosen governor lever screw.
2. Hold throttle lever in wide open position.
3. Rotate governor lever clamp as far as possible in direction shown by arrow.
4. Tighten governor lever screw.

COPYRIGHT 1965 BY
TORO MANUFACTURING CORPORATION
MINNEAPOLIS, MINNESOTA - U.S.A.

CARBURETOR ADJUSTMENTS

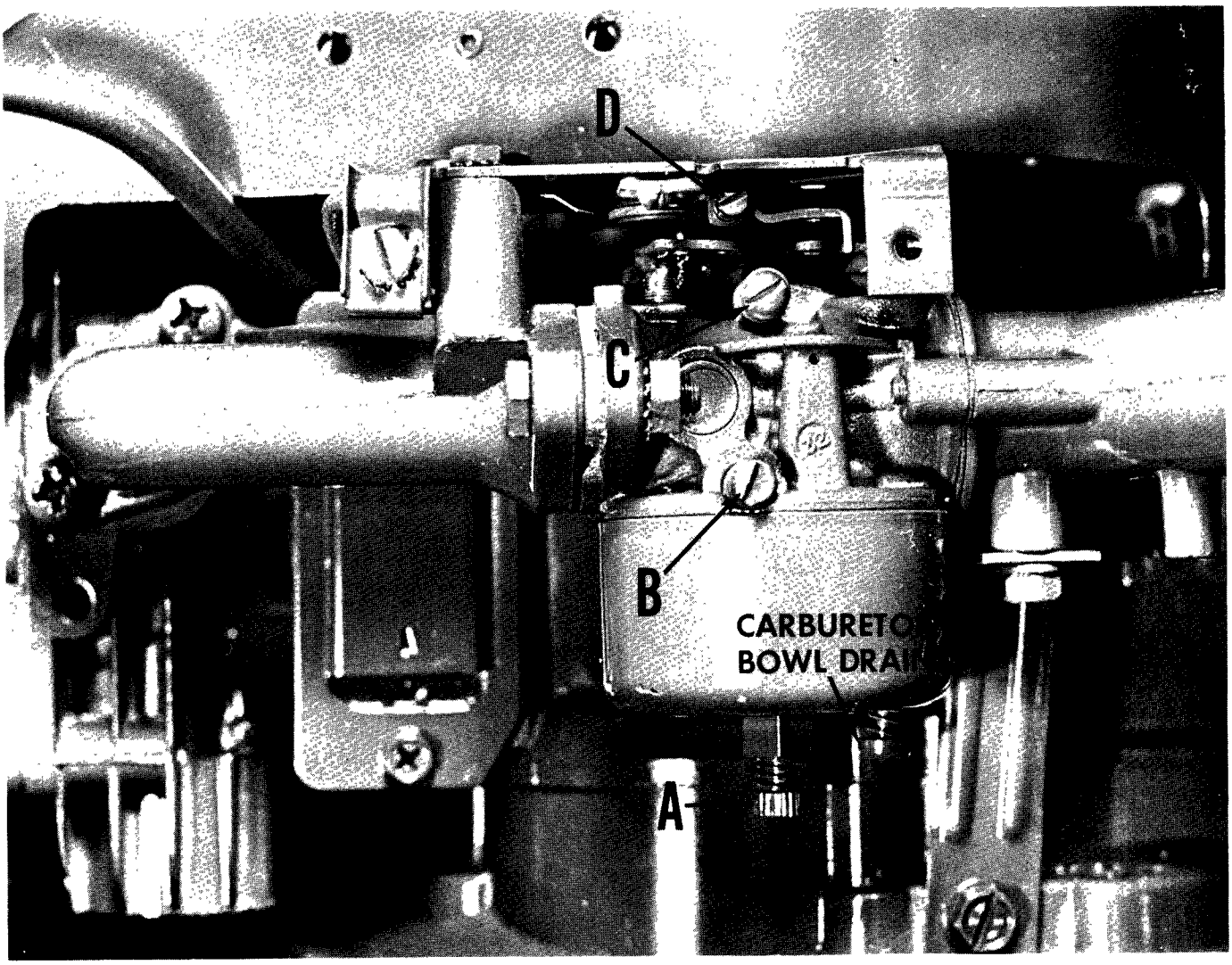

Main and idle screw adjustments are set at the factory for best performance. If it should become necessary to adjust the carburetor, proceed as follows:

HIGH SPEED ADJUSTMENTS

1. Initial adjustment, turn high speed adjusting screw "A" clockwise until finger tight.

2. Carefully turn high-speed adjusting screw "A" in a counterclockwise direction 1 turn.

3. After engine has warmed up, make final adjustments by turning adjusting screw an eighth of a turn at a time, allowing an interval between adjustments for the engine to react.

4. If engine speed is not high enough, adjust high speed by turning screw "D". After increasing speed, make final high speed carburetor adjustments with high speed adjusting screw "A". Allow setting to be slightly rich to compensate for load. Turn counterclockwise to richen mixture.

IDLE ADJUSTMENTS

Set throttle control lever in idle position.

1. Turn idle adjusting screw "B" clockwise until finger tight.

2. Turn counterclockwise 5/8 turn to open. After engine is started, make final adjustments by turning screw an eighth of a turn at a time, allowing time between turns for engine to react. Turn clockwise to richen mixture.

3. Idle speed can be adjusted by turning screw "C". After making speed adjustment, make final idle adjustment by turning screw "B".

19" and 21" H.P. MOWER DRAWING

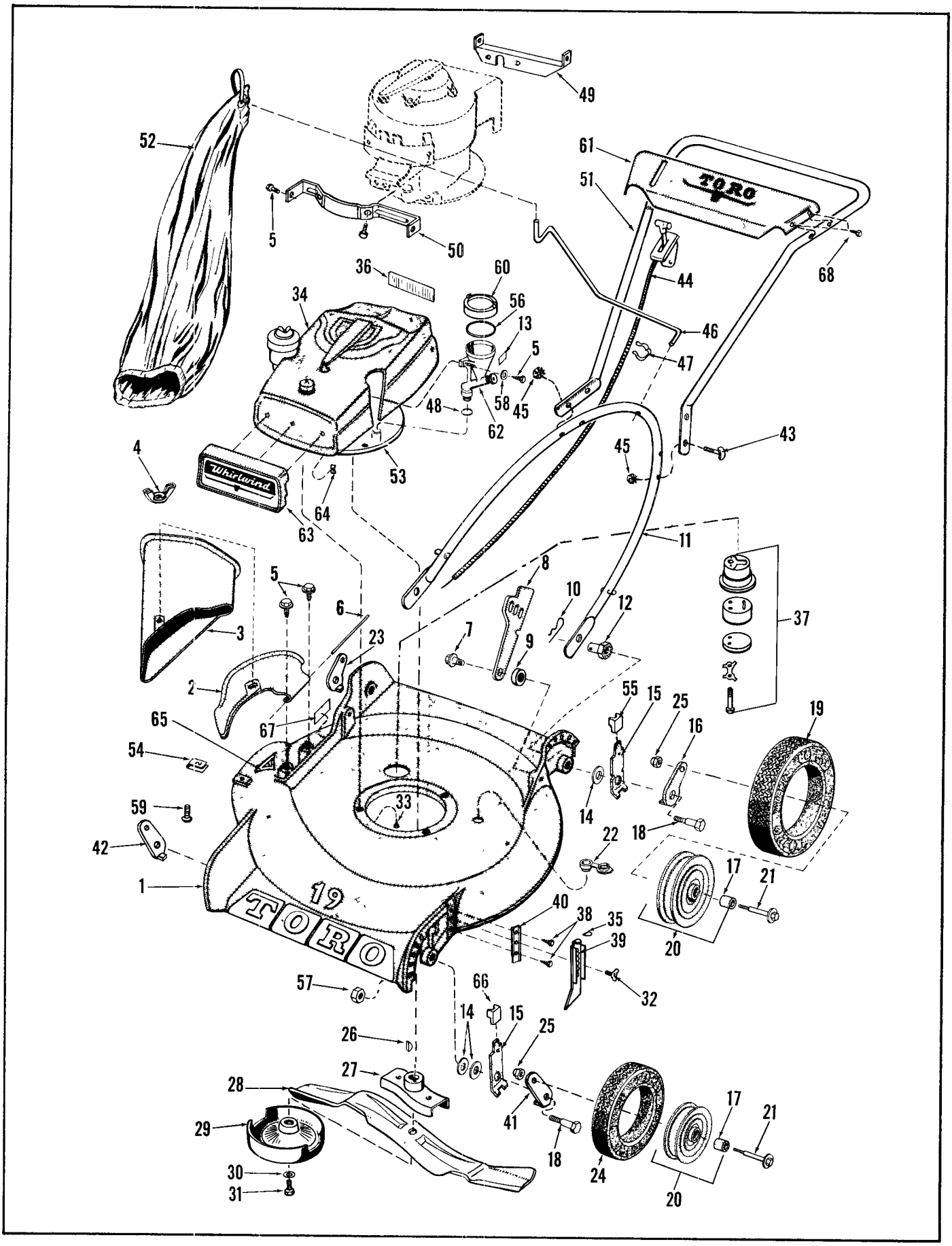

19" and 21" H.P. PARTS LIST

Ref. No.	Part No.	Description	No. Used
1	5-0674	Main Frame - 19" Impulse	1
*	5-0675	Main Frame - 21" H. P.	1
2	3-2574	Deflector	1
3	3-2572	Bag Attachment	1
4	32103-14	Wing Nut	1
5	32104-75	Screw	8
6	3-2644	Hinge Pin	1
7	3-1846	Screw, Shoulder	2
8	5-2446	Handle Latch	2
9	3-3287	Spacer	2
10	3290-255	Hairpin Cotter	2
11	3-9430	Lower Handle	1
12	3-6482	Nut, Handle Pivot	2
13	5-1432	Decal	1
14	3-5956	Pivot Washer	5
15	3-2637	Arm Assy.	4
16	3-2634	Pivot Arm, Left - Rear	1
17	3-2664	Bushing	4
18	3-0655	Pivot Screw	4
19	4-2600	Tire, Rear Wheel	2
20	3-2563	Wheel w/Bushing	4
21	3-2652	Wheel Bolt	4
22	5-0655	Washout Plug	1
23	3-2635	Pivot Arm, Right	1
24	5-0660	Tire, Front Wheel	2
25	3296-5	Nut	4
26	3257-3	Key	1
27	3-9810	Retainer, Blade	1
28	5-1611	Blade, 19" Impulse	1
28	5-1610	Blade, 21" H. P.	1
29	3-6292	Anti Scalp Dish	1
30	3253-26	Lockwasher	1
31	3-5246	Special Screw	1
32	5-2442	Thumb Screw	1
33	32140-48	Screw, Self Tapping	3
34	5-0670	Engine Shroud, 19" & 21" H. P. Impulse	1

Ref. No.	Part No.	Description	No. Used
35	5-0653	Edger, Decal	1
36	5-0662	Decal, Rear - 19" & 21"	1
37	2-9319	Muffler Assembly	1
38	32104-80	Screw, Self Tapping	2
39	5-0658	Edger Blade	1
40	5-0651	Edger Bracket	1
41	5-1984	Arm Pivot	1
42	5-1986	Arm Pivot	1
43	3-2654	Screw, Curved Head	4
44	5-0643	Throttle Control Assy.	1
45	32146-8	Nut	4
46	3-0690	Bag Hanger	1
47	218-75	Clip	1
48	237-65	"O" Ring	1
49	3-7237	Bracket, Tank Shroud	1
50	5-0661	Bracket, Front Shroud	1
51	5-0645	Upper Handle	1
52	81062	Bag, Set of 2	1
53	221-262	Engine, 19" & 21" H. P. Imp.	1
54	3290-199	Speed Nut - "U" type	1
55	5-0656	Knob, Left Rear and Right Front	2
56	5-1391	"O" Ring	1
57	32146-5	Stop nut	2
58	3290-261	Washer	2
59	3290-133	Screw	1
60	3-8429	Reservoir Cap w/Ring #56	1
61	5-0640	Escutcheon Plate	1
62	5-0625	Oil Resupply	1
63	5-0668	Shroud Face	1
64	3290-183	Tinnerman Clip	3
65	5-1426	Decal, Safety Standards	1
66	5-0657	Knob, Right Rear and Left Front	2
67	3-7643	Decal	1
68	32104-76	Screw	4

* Not Illustrated

INSIST ON GENUINE TORO PARTS

PRODUCT CHANGES

In an effort to make improvements available to Toro owners as quickly as possible, minor changes are incorporated into Toro's products from time to time that do not become immediately shown in the Reference Drawing and Parts List. If such a change apparently has been made in your unit, which is not reflected in your manual, see your Toro distributor or his authorized Toro service dealer for information and parts numbers.

21'' POW-R-DRIVE MOWER DRAWING

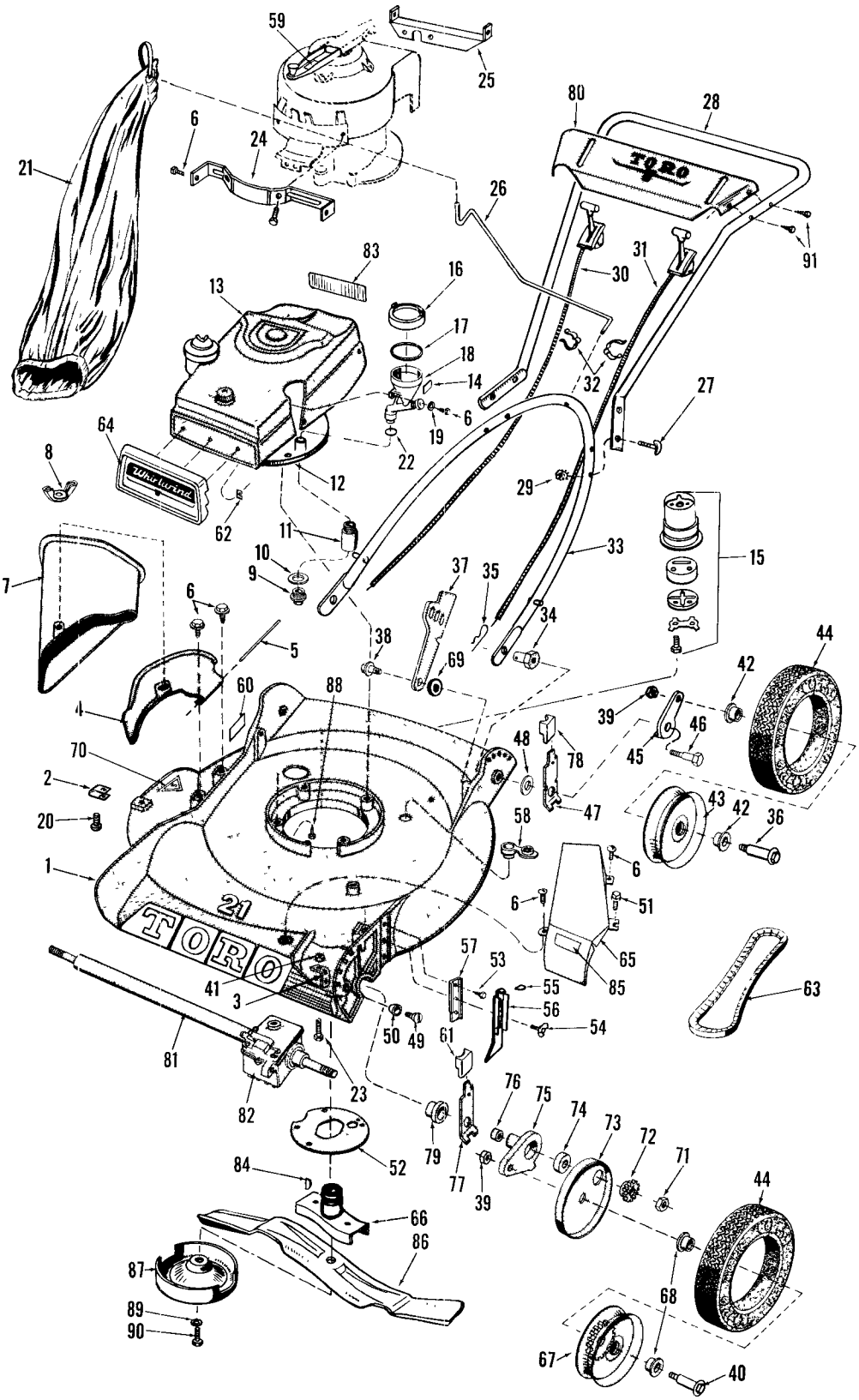

21" POW-R-DRIVE PARTS LIST

Ref. No.	Part No.	Description	No. Used
1	5-0676	Main Frame	1
2	3290-199	Speed Nut	1
3	3-7278	Adjusting Bracket	1
4	3-2574	Deflector	1
5	3-2644	Hinge Pin	1
6	32104-75	Screw	10
7	3-2572	Bag Attachment	1
8	32103-14	Wing Nut	1
9+	27244	Oil Drain Plug	1
10+	28833	Gasket, Oil Drain	1
11	3-0761	Extension, Oil Drain	1
12	221-263	Engine	1
13	5-0670	Engine Shroud	1
14	5-1432	Decal	1
15	2-9329	Muffler Assembly	1
16	3-8429	Reservoir w/Cap & Ring	1
17	5-1391	"O" Ring	1
18	5-0625	Oil Supply Bowl Assembly	1
19	3290-261	Washer	2
20	3290-133	Screw	1
21	81062	Bag - Set of 2	1
22	237-65	"O" Ring	1
23	3-7281	Screw	1
24	5-0661	Bracket, Front Shroud	1
25	3-7237	Bracket, Rear Shroud	1
26	3-0690	Bag Hanger	1
27	3-2654	Screw	4
28	5-0645	Handle, Upper	1
29	32146-8	Nut	4
30	5-0643	Throttle Control Assembly	1
31	5-0644	Clutch Control Assembly	1
32	218-75	Clip	2
33	3-9430	Handle, Lower	1
34	3-6482	Nut, Handle Pivot	2
35	3290-255	Hairpin Cotter	2
36	3-2652	Wheel Bolt	2
37	5-2446	Handle Latch	2
38	3-1846	Screw, Shoulder	2
39	3296-5	Stop Nut	4
40	3-5117	Wheel Bolt	2
41	3218-1	Nut	1
42	3-5116	Bushing	4
43	3-7350	Rear Wheel w/Bshg. Ref. 42	2
44	4-2600	Tire	4
45	3-2634	Pivot Arm, Left Rear	1
*	3-2635	Pivot Arm, Right Rear	1
46	3-0655	Pivot Screw	2

Ref. No.	Part No.	Description	No. Used
47	3-2637	Arm Assy., Rear Wheel	2
48	3-5956	Pivot Washer	2
49	32108-20	Screw	1
50	3255-12	Lockwasher	1
51	32104-82	Screw	1
52	3-7626	Grass Guard	1
53	32104-80	Screw, Self Tapping	2
54	5-2442	Thumb Screw	1
55	5-0653	Edger Decal	1
56	5-0658	Edger Blade	1
57	5-0651	Edger Bracket	1
58	5-0655	Washout Plug	1
59	3-7644	Decal	1
60	3-7643	Decal	1
61	5-0657	Knob, Right Rear & Left Front	2
62	3290-183	Clip, Tinnerman	1
63	3-7274	Belt	1
64	5-0668	Face Shroud	1
65	3-7624	Belt Guard	1
66	3-7286	Retainer, Blade	1
67	3-7570	Front Wheel with Gear & Bushing Ref. 86	2
68	3-5234	Bushing, Front Wheel	2
69	3-3287	Spacer	2
70	5-1426	Decal, Safety Standards	1
71	3296-5	Nut	2
72	3-0738	Gear	2
73	3-5235	Wheel Cover	2
74	251-183	Bearing	2
75	2-6369	Pivot Arm, Left	1
*	2-6359	Pivot Arm, Right	1
76	256-1	Bushing	2
77	3-2640	Arm Assy., Front Wheel	2
78	5-0656	Knob, Left Rear & Right Front	2
79	5-0745	End Cap	2
80	5-0638	Escutcheon Plate	1
81	3-0720	Drive Shaft	1
82	3-7789	Gear Case Assy., Incl. Ref. 81	1
83	5-0662	Decal, Rear	1
84	3257-3	Key	1
85	3-2645	Decal, Belt Guard	1
86	5-1610	Blade	1
87	3-6292	Anti Scalp Dish	1
88	32140-49	Screw, Self Tapping	3
89	3253-26	Lockwasher	1
90	3-5246	Special Screw	1
91	32104-76	Screw	4

* Not Illustrated
\+ Obtain from your Lauson Dealer

ENGINE DRAWING

ALL MODELS

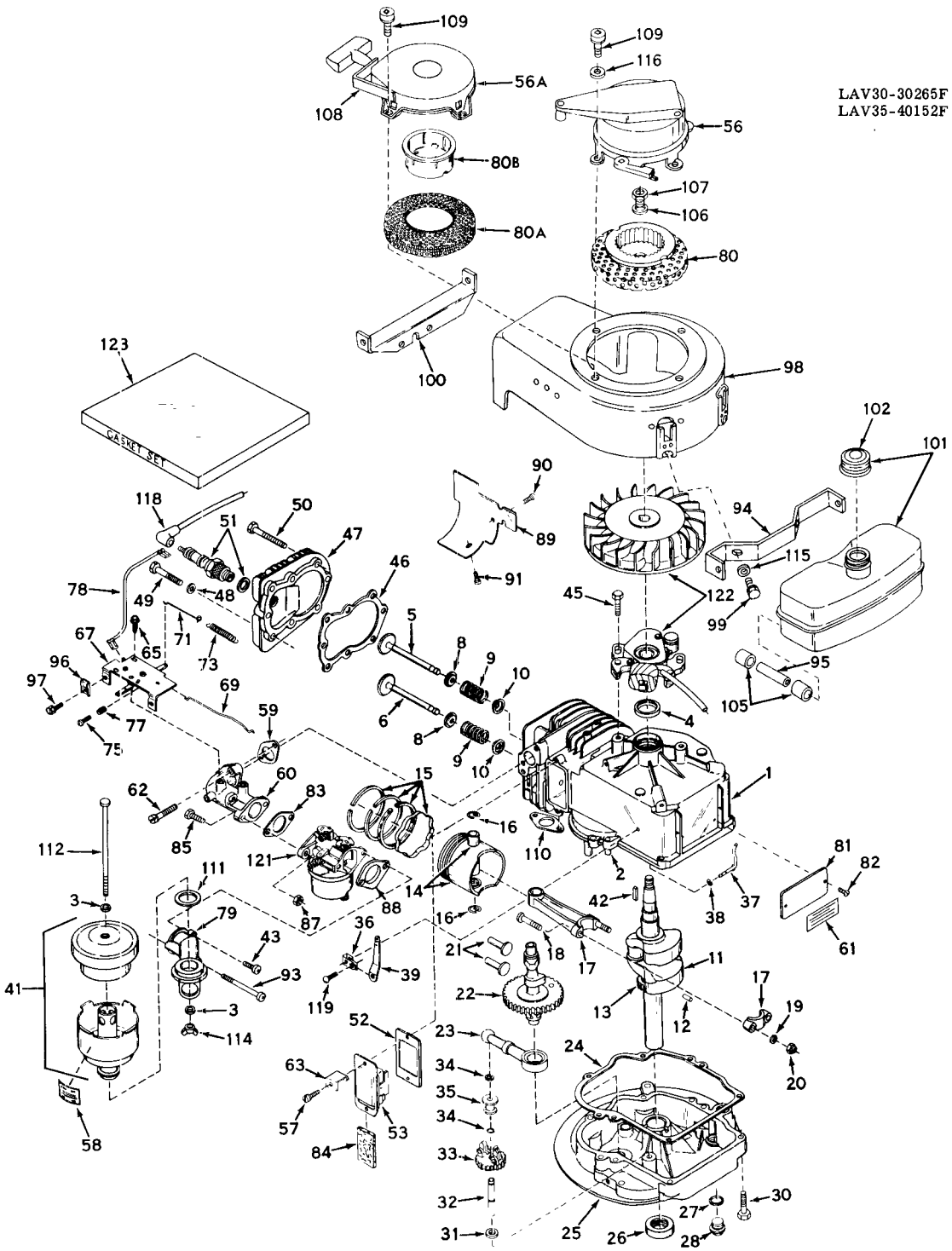

ENGINE PARTS LIST (All Models)

Ref. No.	Part No.	Description	No. Used
1	30084	Cylinder Assy. (Incl. Nos. 2 & 4) (Use with 19" Impulse Start and 21" H. P. only)	1
1	31909	Cylinder Assy. (Incl. Nos. 2 & 4) (Use with 21" S. P. only)	1
2	26727	Pin, Dowel	2
3	27183	Washer, Fibre	2
4	*29183	Seal, Oil	1
5	29314A	Valve, Intake (Standard) (Incl. Nos. 8, 9 & 10)	1
5	29316A	Valve, Intake (1/32" Oversize) (Incl. Nos. 8, 9 & 10)	1
6	29313A	Valve, Exhaust (Standard) (Incl. Nos. 8, 9 & 10)	1
6	29315A	Valve, Exhaust (1/32" oversize) (Incl. Nos. 8, 9 & 10)	1
8	31671	Cap, Upper Valve Spring	2
9	31672	Spring, Valve	2
10	31673	Cap, Lower Valve Spring	2
11	30961	Crankshaft Assy. (Incl. Nos. 12 & 13) (Use with 19" Impulse Start and 21" H. P. only)	1
11	29223	Crankshaft Assy. (Incl. Nos. 12 & 13) (Use with 21" S. P. only)	1
12	29783	Pin, Crankshaft Gear	1
13	27613	Gear, Crankshaft	1
14	31304	Piston & Pin Assy. (Standard) (Incl. 2 of No. 16) (Use with 19" Impulse Start and 21" H. P. only)	1
14	31305	Piston & Pin Assy. (.010 Oversize) (Incl. 2 of No. 16) (Use with 19" Impulse Start and 21" H. P. only)	1
14	31306	Piston & Pin Assy. (.020 Oversize) (Incl. 2 of No. 16) (Use with 19" Impulse Start and 21" H. P. only)	1
14	31307	Piston & Pin Assy. (Standard) (Incl. 2 of No. 16) (Use with 21" S. P. only)	1
14	31308	Piston & Pin Assy. (.010 Oversize) (Incl. 2 of No. 16) (Use with 21" S. P. only)	1
14	31309	Piston & Pin Assy. (.020 Oversize) (Incl. 2 of No. 16) (Use with 21" S. P. only)	1
15	27565	Ring Set, Piston (Standard) (Use with 19" Impulse Start and 21" H. P. only)	1
15	27566	Ring Set, Piston (.010 Oversize) (Use with 19" Impulse Start and 21" H. P. only)	1
15	27567	Ring Set, Piston (.020 Oversize) (Use with 19" Impulse Start and 21" H. P. only)	1
15	28986	Ring Set, Piston (Standard) (Use with 21" S. P. only)	1
15	28987	Ring Set, Piston (.010 Oversize) (Use with 21" S. P. only)	1
15	28988	Ring Set, Piston (.020 Oversize) (Use with 21" S. P. only)	1
16	20381	Ring, Piston Pin Retaining	2
17	30963	Rod Assy., Connecting (Incl. Nos. 18, 19 & 20)	1
18	26706	Bolt, Connecting Rod	2
19	20747	Washer, Connecting Rod	2
20	27573	Nut, Lock	2
21	27241	Lifter, Valve	2
22	31316	Camshaft	1
23	29914	Pump Assy., Oil	1
24	*26750	Gasket, Mounting Flange	1
25	31907	Flange Assy., Mounting (Incl. Nos. 26, 27, 28 & 32)	1
26	*26208	Seal, Oil	1
27	*28833	Gasket, Drain Plug	1
28	27244	Plug, Oil Drain	1
30	650488	Screw	6
31	30590A	Washer, Flat	1
32	30574	Shaft, Mechanical Governor	1
33	30591	Gear Assy., Governor	1
34	29193	Ring, Retaining	2
35	30588A	Spool, Governor	1
36	31335	Clamp, Governor Lever	1
37	30589	Rod, Governor (Incl. No 38)	1
38	28277	Washer, Flat	1
39	31383	Lever, Governor	1
41	31404	Cleaner Assy., Air	1
42	27247	Key, Flywheel	1
43	28597	Screw	1
45	650489	Screw	2
46	*29953B	Gasket, Cylinder Head	1
47	30579	Head, Cylinder	1
48	26073	Washer, 5/16"	5
49	6021	Screw	5
50	6023	Screw	3
51	21943	Plug, Spark (Champion J-8 or equivalent)	1
52	*31619	Gasket, Breather	1
53	31337	Breather Assy. (Incl. Nos. 52 & 84)	1
56	590378	Starter, Impulse (Use with 21" H. P. and 21" S. P. only)	1
56A	590427	Starter, Rewind (Use with 19" Impulse Start only)	1
57	650128	Screw	2
58	30002	Decal, Air Cleaner	1
59	*30188	Gasket, Intake Pipe	1
60	31384	Pipe, Intake	1
61	31865	Decal, Name & Instruction	1
62	650176	Screw	2
63	30593	Clip, Magneto Wire	1
65	30200	Screw	2
67	31736	Control Assy., Speed	1
69	31385	Link, Throttle to Governor	1

(Continued Next Page)

ENGINE PARTS LIST (All Models) - Continued

Ref. No.	Part No.	Description	No. Used
71	31387	Link, Governor Spring	1
73	31386	Spring, Governor	1
75	650549	Screw	1
77	31342	Spring, Compression	1
78	31388	Wire, Ground	1
79	31473	Elbow, Air Cleaner	1
80	31284	Hub & Screen (Use with 21" H.P. and 21" S.P. only)	1
80A	590417	Screen, Starter Cup (Use with 19" Impulse Start only)	1
80B	590416	Cup, Starter (Use with 19" Impulse Start only)	1
81	31345	Plate, Identification	1
82	28670	Screw, Drive	2
83	*26756	Gasket, Carburetor	1
84	31410	Element, Breather	1
85	6201	Screw	2
87	29752	Nut, Hex Jam	2
88	*27272	Gasket, Cleaner Bracket	1
89	29516	Extension, Housing (Use with 21" S.P. only)	1
90	30688	Screw (Use with 21" S.P. only)	1
91	650128	Screw (Use with 21" S.P. only)	1
93	650519	Screw	1
94	**5-0661	Bracket, Shroud	1
95	31400	Line, Fuel	1
96	27793	Clip, Conduit	1
97	28942	Screw	1
98	32169	Housing, Blower (Use with 19" Impulse Start only)	1

Ref. No.	Part No.	Description	No. Used
98	32171	Housing, Blower (Use with 21" H.P. and 21" S.P. only)	1
99	650372	Screw	2
100	**3-7237	Bracket, Shroud	1
101	32170	Tank, Fuel (Incl. No. 102)	1
102	27799	Cap, Fuel Filler	1
105	29774	Line, Fuel	2
106	650490	Washer, Belleville	1
107	650607	Nut, Flywheel (use with 19" Impulse Start only)	1
107	650491	Nut, Flywheel (Use with 21" H.P. and 21" S.P. only)	1
108	**3-9450	Plate, Rewind Rope (Use with 19" Impulse Start only)	1
109	29716	Screw (Use with 19" Impulse Start only)	4
109	30513	Screw (Use with 21" H.P. and 21" S.P. only)	4
110	*30081	Gasket, Muffler	1
111	*27165	Gasket, Air Cleaner to Elbow	1
112	650622	Bolt, Air Cleaner	1
114	9577	Nut, Wing	1
115	650168	Washer, Plain Flat	2
116	650168	Flatwasher (use with 21" H.P. and 21" S.P. only)	4
118	610118	Cover, Spark Plug	1
119	650548	Screw	1
121	631242	Carburetor (Use with 19" Impulse Start and 21" H.P. only)	1
121	631003A	Carburetor (Use with 21" S.P. only)	1
122	610693	Magneto, Tecumseh	1
123	31409A	Gasket Set (Incl. items marked *)	1

* Not Illustrated
** Order from Toro Dealer

IMPULSE STARTER No. 590378

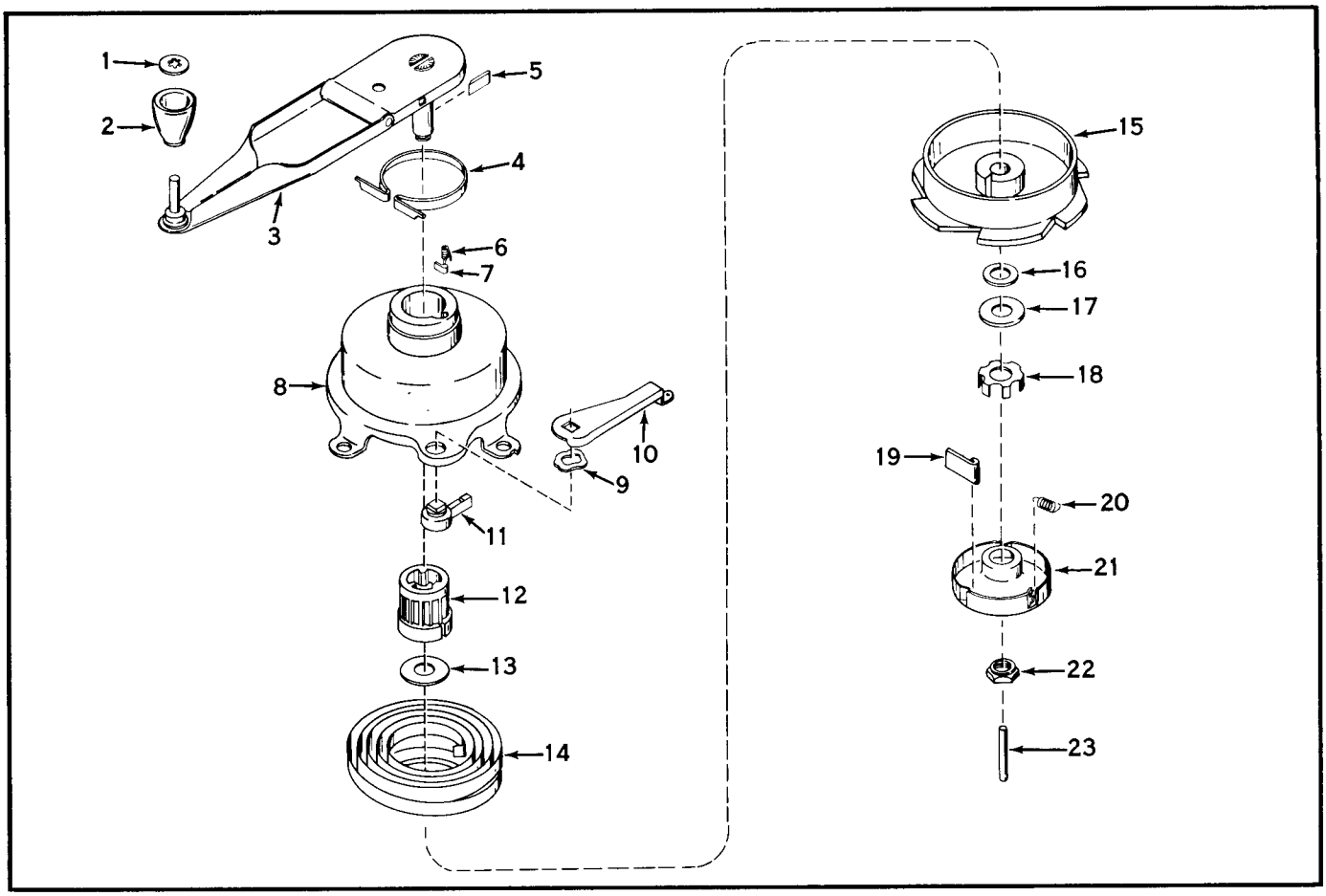

Ref. No.	Part No.	Description	No. Used
1	29227	Fastener, Handle	1
2	29228	Knob, Starter Handle	1
3	31458	Handle Assembly, Starter (Incl. Nos. 4 and 5)	1
4	29935	Band, Brake	1
5	29936	Dog, Wind	1
6	30987	Spring, Lock Dog	1
7	29937	Dog, Lock	1
8	31421	Housing & Release Assy., Offset (Incl. Nos. 9, 10 & 11)	1
9	31412	Washer, Wave	1
10	31422	Release Lever, Offset	1
11	31419	Release Assembly	1

Ref. No.	Part No.	Description	No. Used
12	31455	Bearing, Center	1
13	31456	Washer, Spacer	1
14	31413	Spring, Power	1
15	31457	Hub, Spring	1
16	31418	Washer, Shim (Use as req'd.)	1
17	29734	Washer, Thrust	1
18	29717	Brake	1
19	590148	Dog, Starter	3
20	29940	Spring, Retainer	1
21	29942	Retainer	1
22	31417	Nut, Shoulder	1
23	29736	Pin, Centering	1

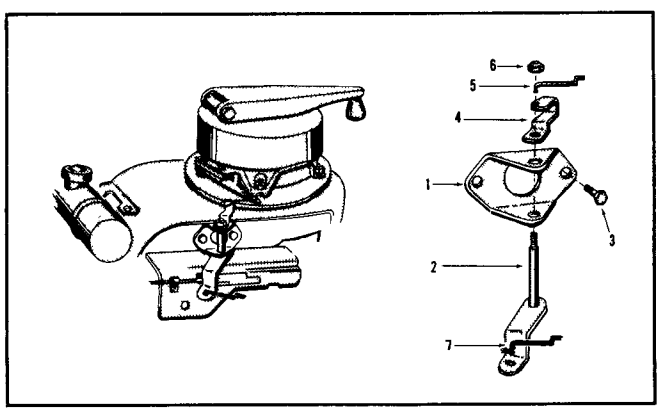

REMOTE CONTROL LINKAGE

Ref. No.	Part No.	Description	No. Used
1	3-4368	Attach Bracket	1
2	3-5613	Lever	1
3	32104-76	Screw	2
4	3-5617	Crank	1
5	3-5653	Link	1
6	3296-3	Nut	1
7	3-5773	Link	1

GEAR CASE ASSEMBLY
(21'' POW-R-DRIVE)

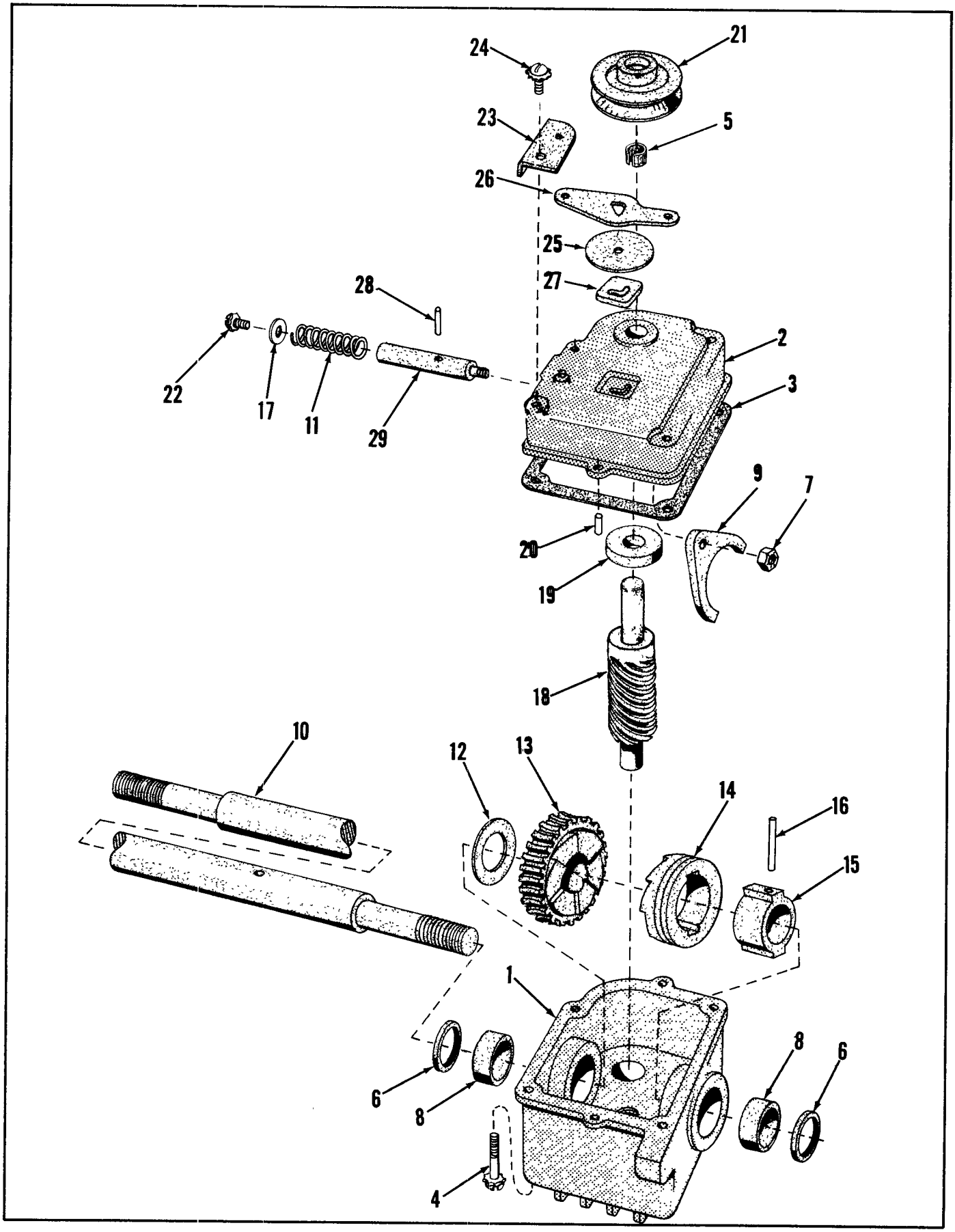

GEAR CASE ASSEMBLY PARTS LIST

Ref. No.	Part No.	Description	No. Used
1	3-1079	Gear Case (Incl. 2 Ref. #8)	1
2	3-6271	Cover, Gear Case	1
3	3-0734	Gasket	1
4	32140-38	Screw, Sems	4
5	3290-286	Tolerance Ring	1
6	253-86	Oil Seal	2
7	3296-12	Nut	1
8	256-110	Bushing	2
9	3-0730	Shifter Fork	1
10	3-0720	Shaft, Drive	1
11	3-0731	Spring	1
12	3-0724	Washer, Thrust	1
13	3-0723	Worm Gear	1
14	3-0722	Clutch Jaw	1
15	3-0721	Sleeve	1

Ref. No.	Part No.	Description	No. Used
16	32121-40	Pin	1
17	3256-14	Washer	1
18	5-1616	Worm Shaft	1
19	251-144	Bearing	1
20	32121-1	Pin	2
21	5-1615	Pulley	1
22	32140-40	Screw, Sems	1
23	3-2655	Shifter Arm Guide	1
24	32140-39	Screw, Sems	1
25	3-2615	Trans. Dust Cap	1
26	3-0732	Shifter Arm	1
27	3-0681	Latch Plate	1
28	32121-23	Pin, In Shift Rod	1
29	3-2662	Shifter Rod	1

INSIST ON GENUINE TORO PARTS

IMPORTANT ORDERING INSTRUCTIONS

Repair parts are available from your TORO distributor. To insure getting correct parts without delay, please furnish the following information:

1. Serial number of your product as shown on the name plate.
2. Part number, description and quantity of each part required.
3. Name and address where parts are to be shipped.
4. Do NOT order by reference number, use part number only.

Warranty

The Manufacturer warrants each new piece of equipment sold to be free of defects in material and workmanship. For one year from the purchase date of consumer line equipment or 45 days if sold for commercial use, Toro Manufacturing Corporation will repair or replace for the original purchaser, free of charge, through any Authorized Service Dealer, any part or parts found at our factory in Minneapolis, Minnesota, to be defective under normal use and service. All institutional equipment is warranted for ninety (90) days from the purchase date.

This Warranty does not obligate the Manufacturer to bear the cost of transportation charges in connection with the replacement or repair of defective parts -- nor shall it apply to a machine upon which repairs or alterations have been made, unless authorized by the manufacturer.

This Warranty does not include nor cover standard accessories produced by other manufacturers. Such accessories have separate warranties by their respective manufacturers . . . and repair or exchange will be made on the basis of such warranties, and the policies authorized by them shall be adhered to.

This Warranty is in lieu of all other warranties expressed or implied.

CARBURETOR NOS. 631003A & 631242

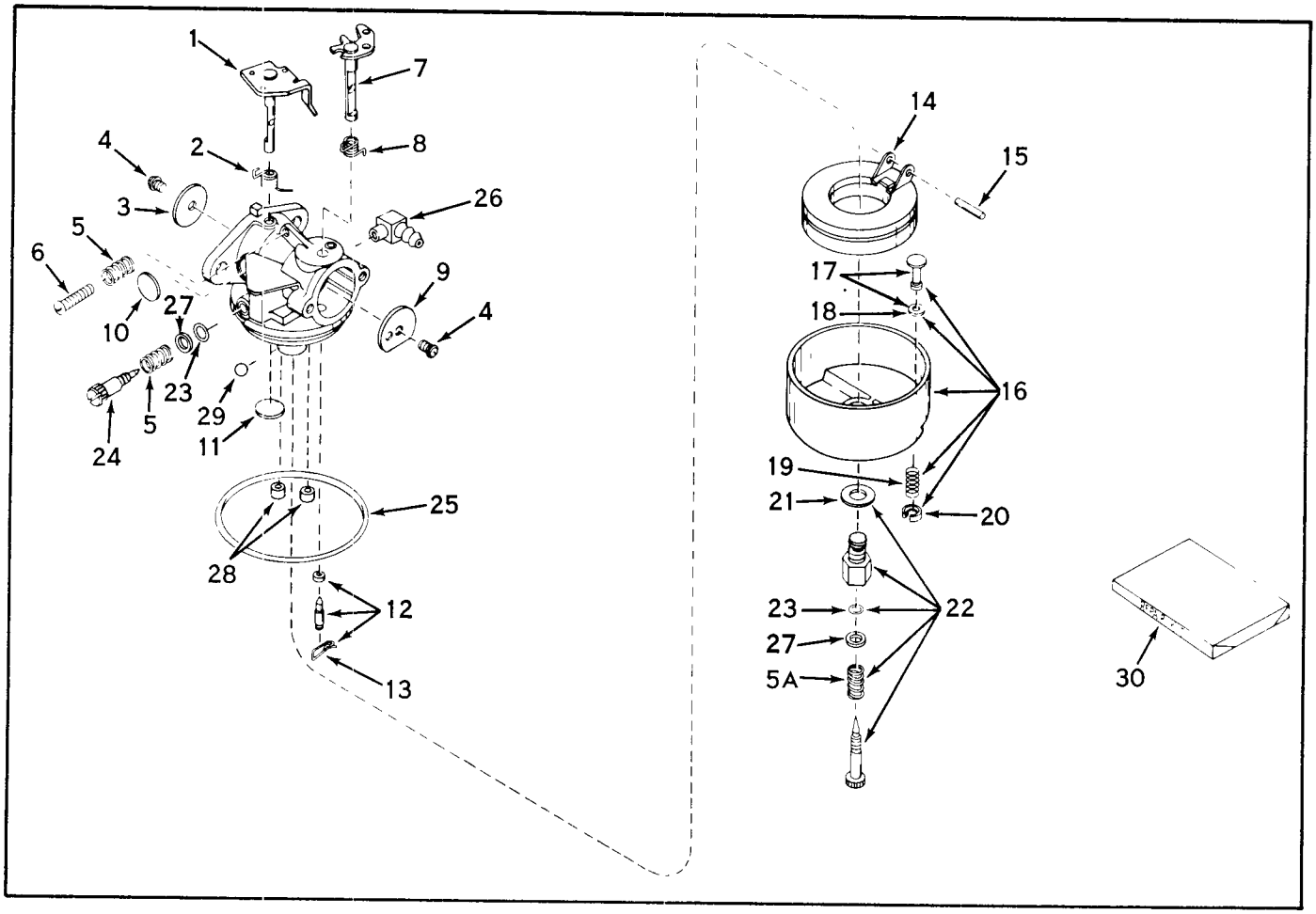

PARTS LIST

Ref. No.	Part No.	Description	No. Used
1	630983	Shaft & Lever Assy., Throttle	1
2	631066	Spring, Throttle Return	1
3	631036	Shutter, Throttle	1
4	650506	Screw	2
5	630766	Spring, Idle Regulating Screw	2
5A	630738	Spring, Main Adjustment Screw	1
6	650417	Screw, Idle Regulating	1
7	630973	Shaft & Lever Assy., Choke	1
8	630821	Spring, Choke Return	1
9	631037	Shutter, Choke	1
10	630748	Plug, Welch	1
11	631027	Plug, Welch	1
12	*631021	Inlet Needle, Seat & Clip Assy. (Incl. No. 13)	1
13	631022	Clip, Inlet Needle	1
14	631023	Float, Carburetor	1
15	*631024	Shaft, Float	1
16	631025	Bowl & Drain Assy., Float (Incl. Nos. 17, 19 & 20)	1
17	27136	Plunger Assy., Drain (Incl. No. 18)	1
18	27554	Gasket, Drain Plunger	1
19	27137	Spring, Drain Plunger	1
20	27138	Retainer, Plunger Spring	1
21	27110	Gasket, Bowl-to-body	1
22	*631026	Adjustment Screw Assy., Main (Incl. Nos. 5A, 21, 23, & 27)	1
23	*630740	"O" Ring, Adjustment Screw	2
24	*631078	Screw, Idle Adjustment (Used on 19" & 21" H. P. Models only)	1
24	*631239	Screw, Idle Adjustment (Used on 21" Self Propelled Model only)	1
25	*631028	"O" Ring, Bowl-to-body	1
26	631038	Fitting, Fuel Inlet	1
27	630739	Washer	2
28	630747	Plug, Cup	2
29	631081	Ball, Aluminum	1
30	631029	Repair Kit (Incl. items marked *) (Used on 19" & 21" H. P. Models only)	1
30	631240	Repair Kit (Incl. items marked *) (Used on 21" Self Propelled Model only)	1

MAGNETO No. 610693

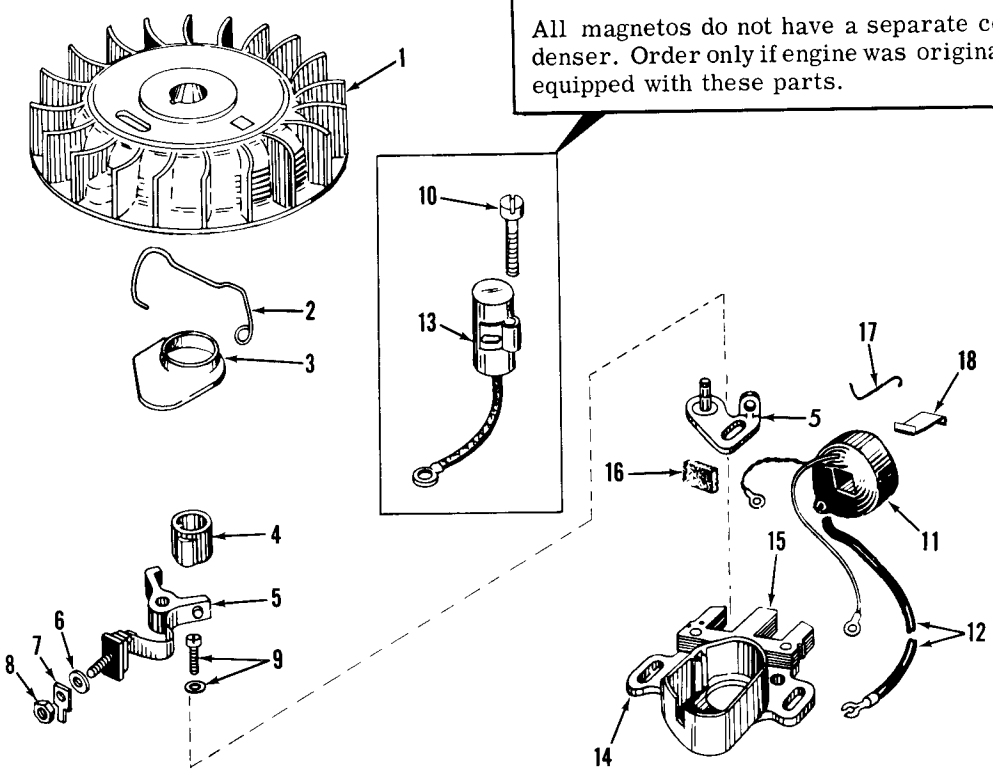

Ref. No.	Part No.	Description	No. Used
1	31331	Flywheel	1
2	30551	Spring, Breaker Box Dust Cover	1
3	30550	Cover, Breaker Box Dust	1
4	30552	Cam, Breaker	1
5	30547	Contact Assembly, Breaker	1
6	610385	Washer, Terminal	1
7	30843	Tab, Ground Terminal	1
8	610408	Nut, Terminal	1
9	29181	Screw & Washer, Breaker	1
10	610593	Screw, Condenser	1

Ref. No.	Part No.	Description	No. Used
11	*30560	Coil Assy., (Incl. Ref. Nos. 12 & 18 & any other parts req'd for correct replacement.)	1
12	30554	Wire, Lead	1
13	30548	Condenser	1
14	30545	Core and Plate	1
15	30561	Stator Assy., (Incl. Ref. Nos. 5 thru 14, 16, 17 & 18)	1
16	30549	Felt, Cam Wiper	1
17	31311	Clip, Coil Locking	1
18	29629	Spring, Coil Wedge	1

* Some replacement coils do not require condenser. Specific instructions included with replacement coil.

TORO POWER MOWERS

Toro power mowers and Power Handle implements are designed and built to give years of precision performance . . . to make them "the best you can buy." And there's over 50 years of manufacturing experience to back them up.
One of Toro's most important objectives — and one which has helped make Toro the world's largest manufacturer of power mowers — is to provide the customer with complete local service and parts. This Toro has done through an extensive chain of service dealers, factory-trained to give you the most careful, competent care for your Toro work-saver.

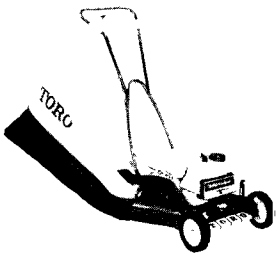

19" WHIRLWIND

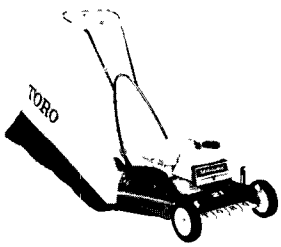

21" HAND PROPELLED WHIRLWIND

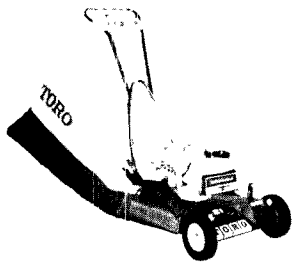

21" POW-R-DRIVE WHIRLWIND


21" HEVI-DUTY WHIRLWIND HAND PROPELLED


21" HEVI-DUTY WHIRLWIND SELF PROPELLED


25" HEVI-DUTY WHIRLWIND

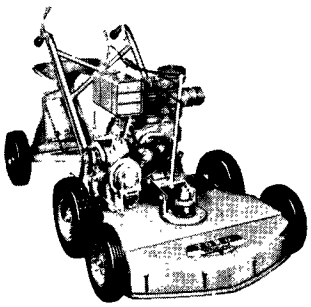
31" WHIRLWIND


34" HEVI-DUTY WHIRLWIND

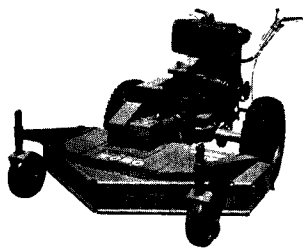
50" TROJAN

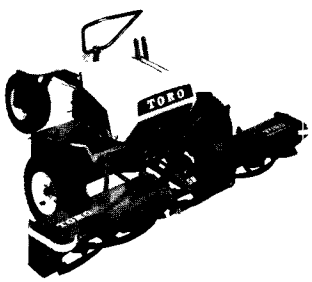

58" PROFESSIONAL

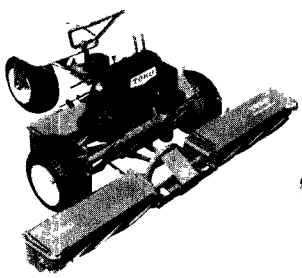
70" PROFESSIONAL

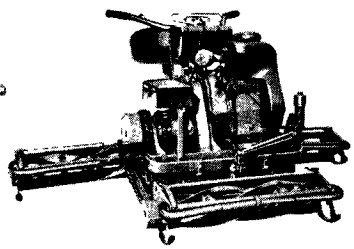
76" PROFESSIONAL

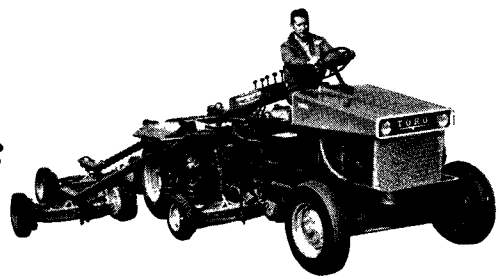
7 UNIT HYDRAULIC PARKMASTER

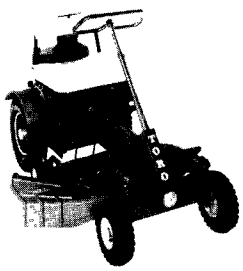
BIG RED

Reel Mower or Rotary Mower . . . Self Propelled or Riding Mower . . . Whatever your preference in Power Mowers, Toro makes a model to fit your needs. Choose from Toro's complete line of fine mowing equipment.

Toro has a mower that's just right for you. And Toro Mowers are the best you can buy!

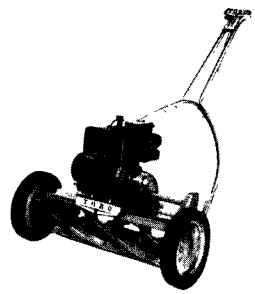
21" SPORTLAWN

TORO MANUFACTURING CORPORATION – Minneapolis, Minnesota 55420, U.S.A.

LITHO IN U. S. A.

TORO *Builds the right Power Mower for every need!*